Sanhsin

Brushless DC Tubular Motor for Motorized Blinds System

Operation Manual

Apply on：

SS40E series motor
SSRC16C remote control
SSRC001 remote control

Patents：

1. U.S. Invention Patent - US 7839035 B2
2. R.O.C. Invention Patent - I 357400
3. R.O.C. Utility Model Patent - M329633 , M329100
4. China Invention Patent - CN 101304205 B
5. China Utility Model Patent - CN 201087053 Y

- Thank you for purchasing this product.
- To protect your right, please contact the distributor for warranty card.
- In the warranty card, be sure to fill the date of purchase and the distributor's name.

Table of Content

Before Using

Safety recautions ---------- 3

Name of Each Part ---------- 4

Installation ---------- 7

Settings

Switch Setting Mode / User Mode ---------- 11

Switch blind system ---------- 13

Set Connection Between Motor and Remote Control ---------- 14

Cancel the Connection ---------- 15

Switch Between Forward and Reverse Rotations ---------- 16

Set Upper and Lower limits ---------- 17

Set Group Control ---------- 19

Duplicate Remote Control ---------- 21

Cancel 『**Other**』 Remote Control ---------- 22

Set \ Cancel Preferred Position ---------- 23

Operate Preferred Position ---------- 24

Quick Command Guide ---------- 25

Miscellaneous

Troubleshooting ---------- 27

Appendix ---------- 28

Safety Precautions

- Before using this product , please read the manual carefully.
- After reading , please keep this manual properly for future reference.
- In this manual, the precautions indicated as Warnings and Cautions. Please observe the following precautions to ensure safety.

⚠ Warning	⚠ Caution
This indicates " Possible death or serious injury may occur ".	This indicates " Possible injury or material damage may occur".

⚠ Warning

- The appliance is not to be used by children or persons with reduced physical, sensory or mental capabilities, or lack of experience and knowledge, unless they have been given supervision or instruction.
- Children being supervised not to play with the appliance.
- Important safety instructions. Follow all instructions, since incorrect installation can lead to severe injury.
- Do not allow children to play with fixed controls. Keep remote controls away from children
- Frequently examine the installation for imbalance and signs of wear or damage to cables and springs. Do not use if repair or adjustment is necessary.
- Full all-pole disconnection from the supply mains must be provided in the fixed wiring in accordance with the wiring rules.

⚠ Caution

To reduce the fire risk of electric shock or product damage:

- Do not expose the equipment to rain, moist, water dripping or water splashing environment; and do not place objects fully filled with water next to the equipment.
- Do not disassemble this equipment.
- Do not use any power supply with a voltage not complying with the rated voltage of the equipment.
- If there is any abnormal condition or when it needs repair, please contact your distributor or the original dealer.

If you find any errors in this manual, or if you are not clear about the description in this manual, please contact the distributor. Thank you!

Name of Each Part

■ SS40E series Tubular Motor

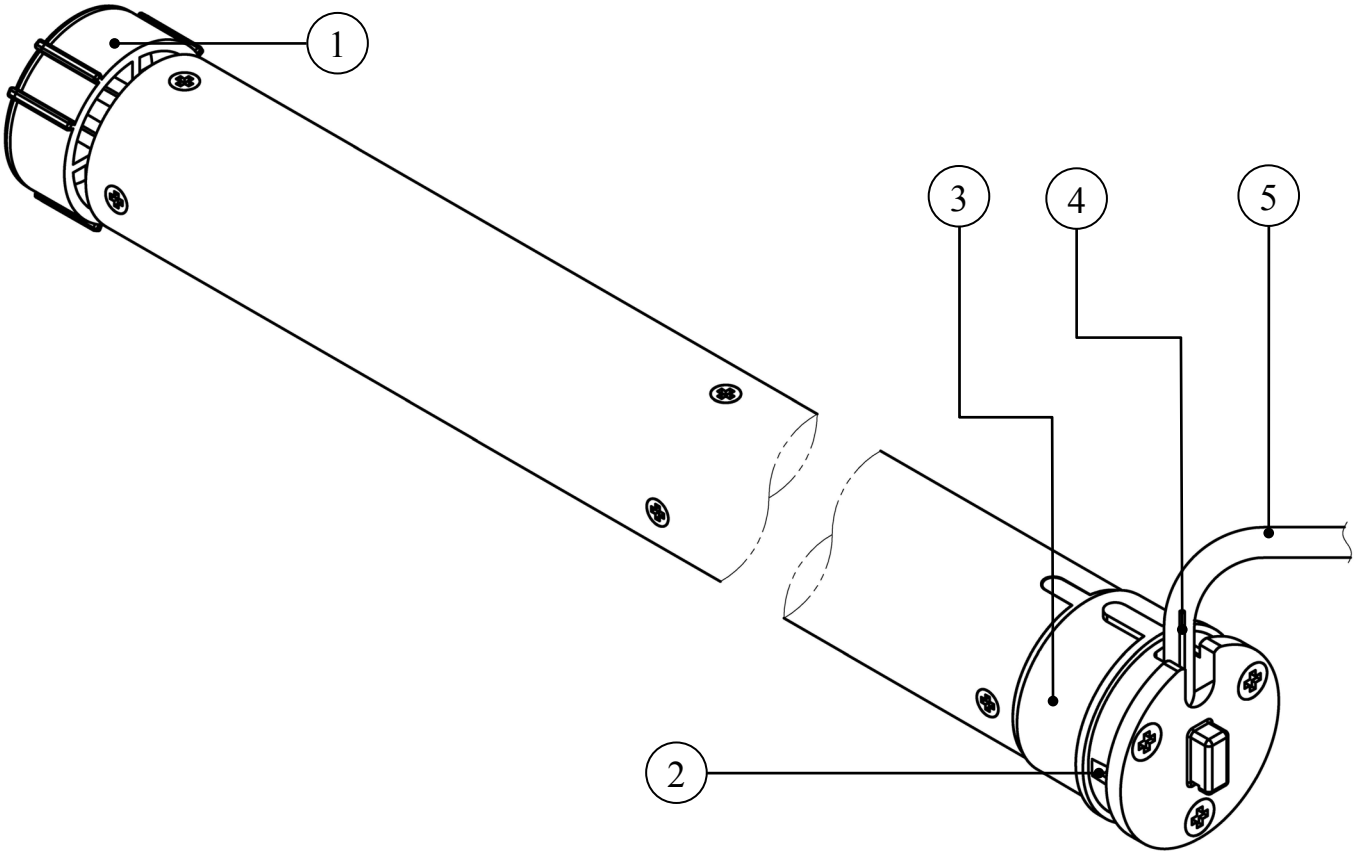

1. **Driving Wheel：**
   - It connects the tubular motor to the aluminum tube so that the motor may drive the aluminum tube to rotate.
2. **Code Button：**
   - It is for setting the communication code between the remote control unit and the tubular motor.
3. **Crown**
4. **Antenna：**
   - It is for receiving instructions from the remote control unit.
5. **AC Power Cord**

■ SSRC16C remote control

● Front side details

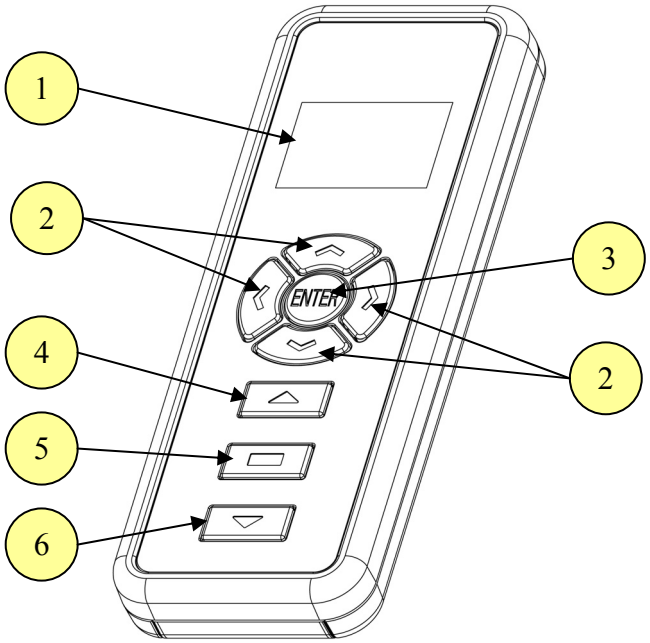

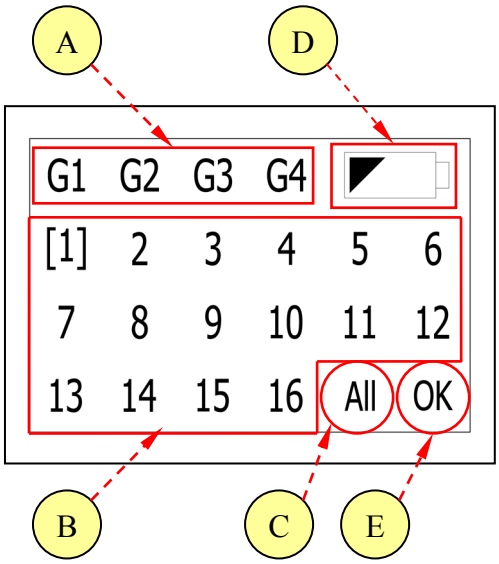

LCD Screen detail

1. LCD Screen：
   A. **Group channel** : 4 group control channels available from G1 to G4.
   B. **Window channel**: 16 window channels available from 1 to 16.
   C. **All**: to control all channels at the same time.
   D. **Battery**: appears only low battery.
   E. **OK**: a confirm key during group control settings.
2. Channel selection buttons「∧」、「∨」、「<」、「>」：
   - To select window channel or group channel or All.
3. ENTER : ：
   - To confirm channel selected.
4. UP : ：
   - To lift blinds upward.
5. STOP：
   - To stop blinds movement, or move blinds to preferred position, or switch between forward and backward rotations.
6. DOWN：
   - To move blinds downward.

- Reverse side details

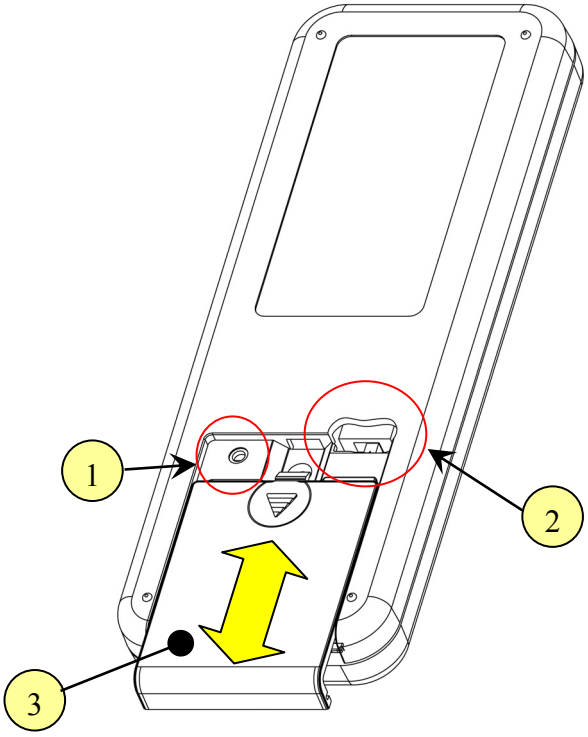

1. Duplicate button：
   - To duplicate or cancel the remote control（P.21~22）
2. Mode switch：
   - To switch between **USER MODE** and **SETTING MODE**（P.11）。
3. Battery cover

※Notice:

About the remote control:

- Please do not install the socket at a location that may be exposed to direct sunlight.
- If the Remote Control activates other electronic appliances, please contact the distributor.

Caution:

15.21

You are cautioned that changes or modifications not expressly approved by the part responsible for compliance could void the user's authority to operate the equipment.

15.105(b)

This equipment has been tested and found to comply with the limits for a Class B digital device, pursuant to part 15 of the FCC rules. These limits are designed to provide reasonable protection against harmful interference in a residential installation.
This equipment generates uses and can radiate radio frequency energy and, if not installed and used in accordance with the instructions, may cause harmful interference to radio communications. However, there is no guarantee that interference will not occur in a particular installation. If this equipment does cause harmful interference to radio or television reception, which can be determined by turning the equipment off and on, the user is encouraged to try to correct the interference by one or more of the following measures:

-Reorient or relocate the receiving antenna.
-Increase the separation between the equipment and receiver.
-Connect the equipment into an outlet on a circuit different from that to which the receiver is connected.
-Consult the dealer or an experienced radio/TV technician for help.

This device complies with part 15 of the FCC Rules. Operation is subject to the following two conditions:
1) this device may not cause interference and
2) this device must accept any interference, including interference that may cause undesired operation of the device.

Installation

■ Installation of motorized blinds：

1. Select a suitable aluminum tube

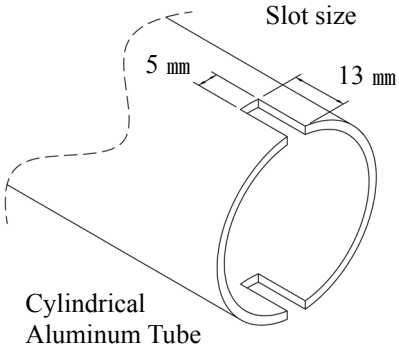

Cylindrical
Aluminum Tube
Inside diameter ϕ 40

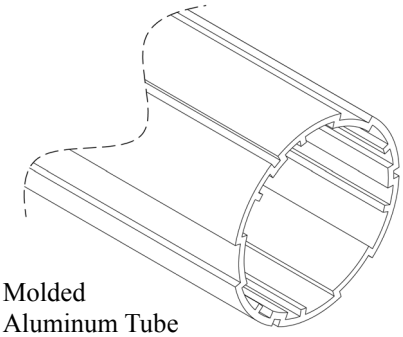

Molded
Aluminum Tube
ATD46

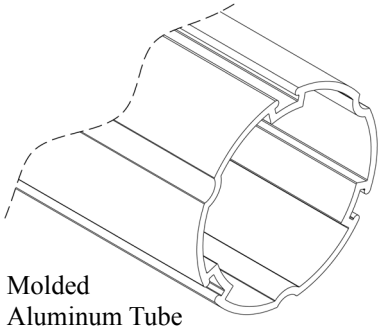

Molded
Aluminum Tube
ATD50
A "plastic ring for ATD50" is required

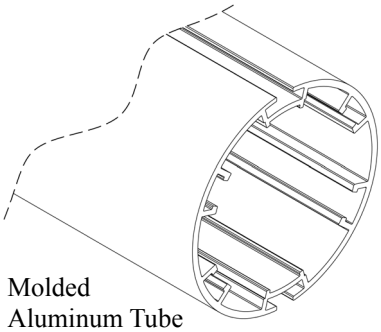

Molded
Aluminum Tube
ATD51
A " ring for ATD51" is required

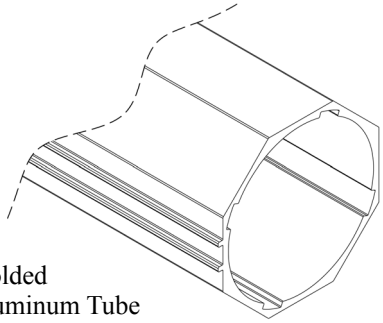

Molded
Aluminum Tube
ATO43
Specified tube for venetian blinds

2. Insert the tubular motor into tube

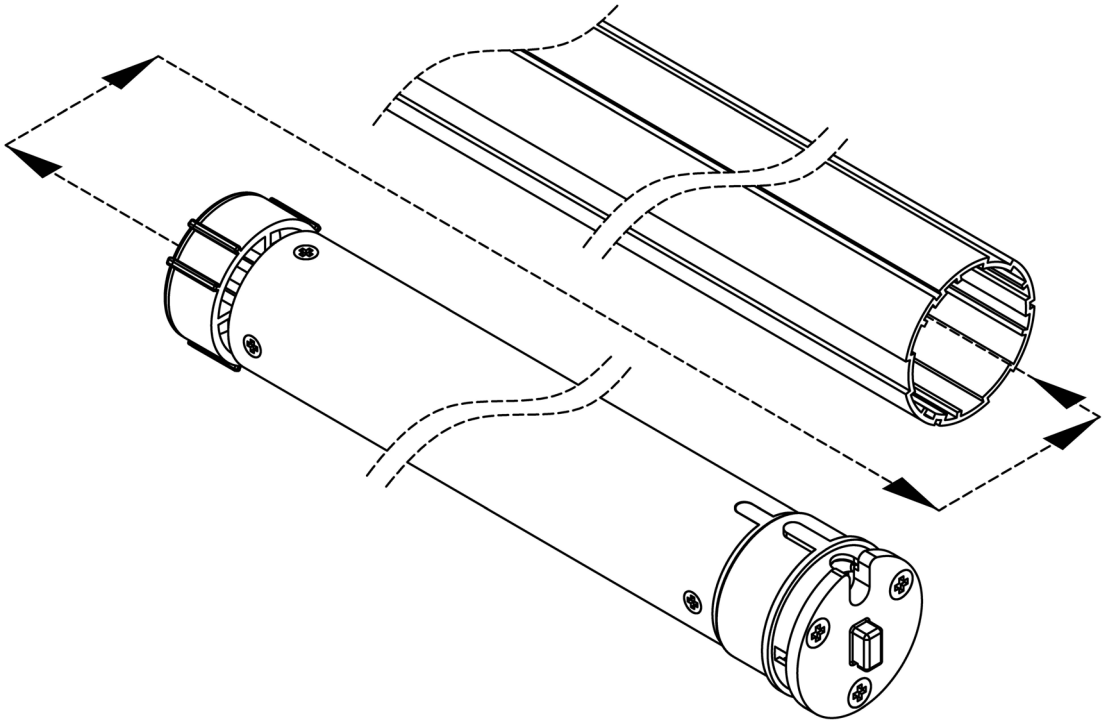

3. Position the Crown pin into the slot.

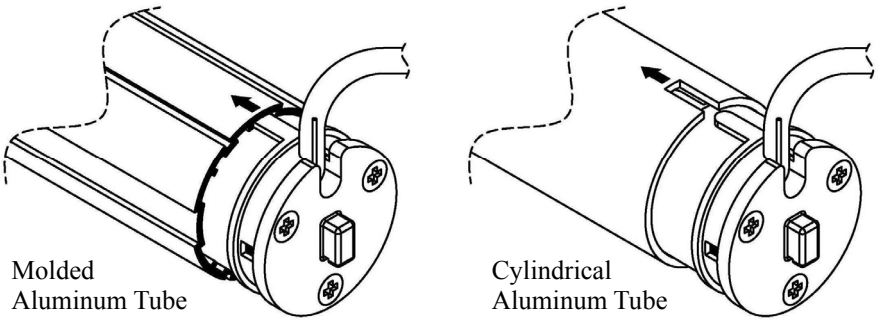

Position for inserting the Positioning Pin of the **Crown**

4. Fasten the tube at the motor end with screws (not a necessity, may skip this step)

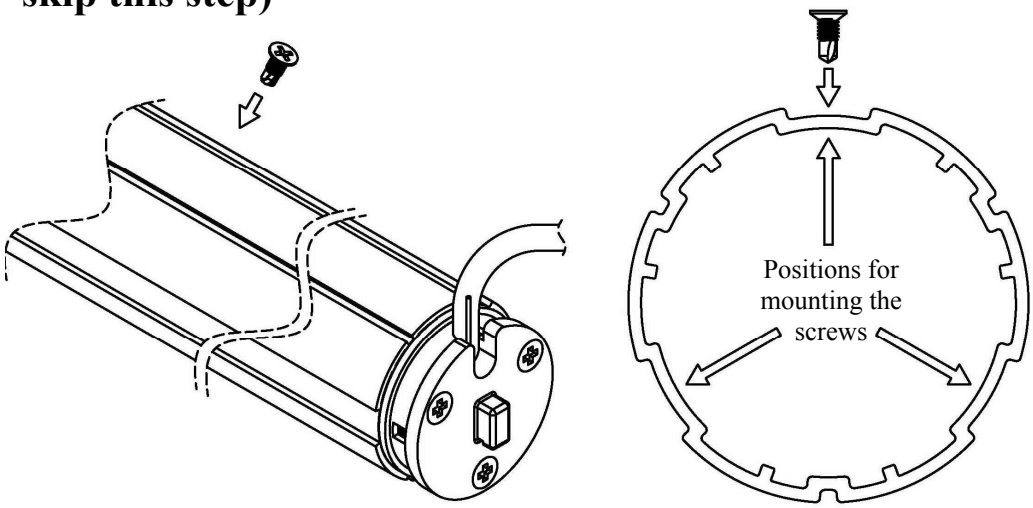

5. Inset the idler wheel onto tube.

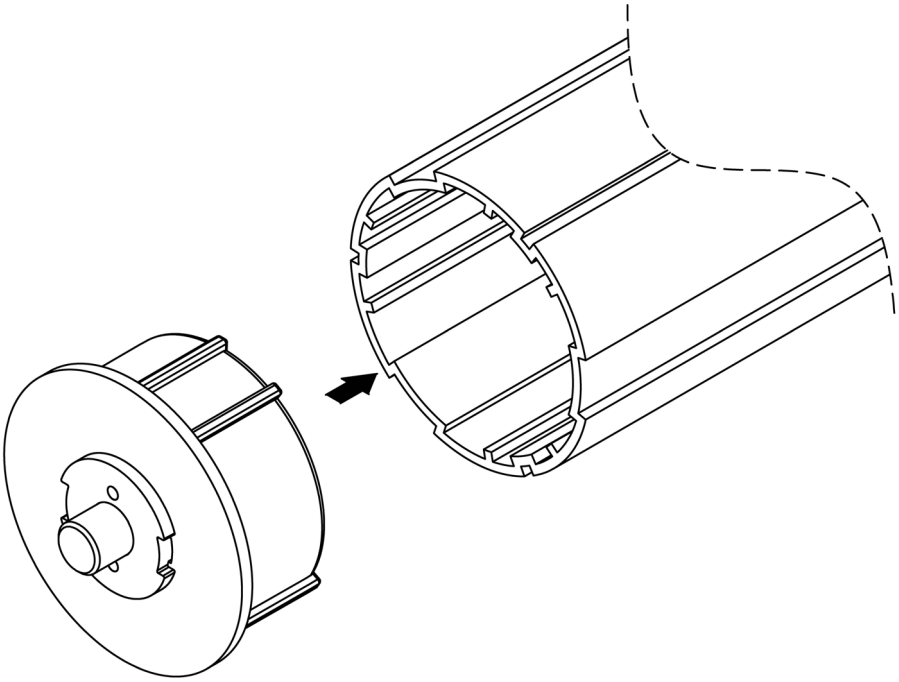

6. **Fasten the tube at the idler wheel end with screws (not a necessity, may skip this step）.**

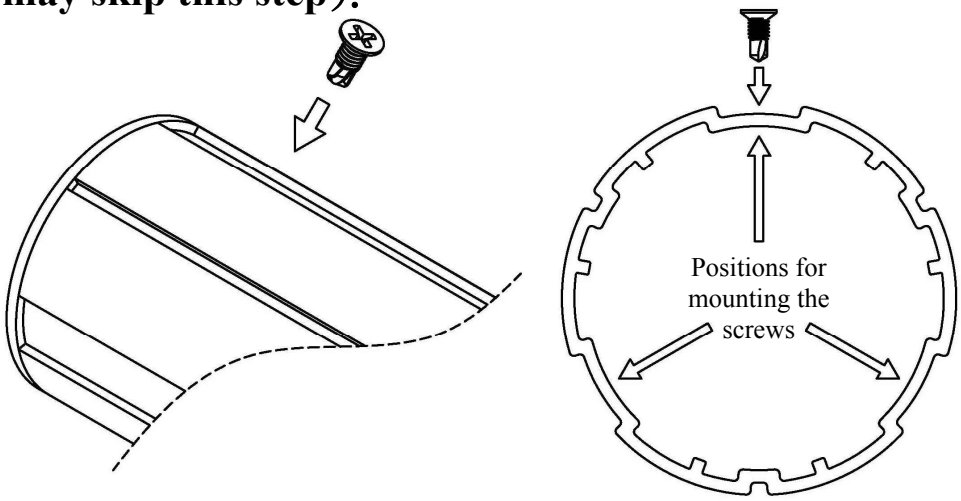

7. **Install the brackets:** Measure a suitable distance for installing the brackets to the target position (in the curtain box or on the wall).

8. **Install the motorized blinds:** Install the motorized blinds onto the brackets.

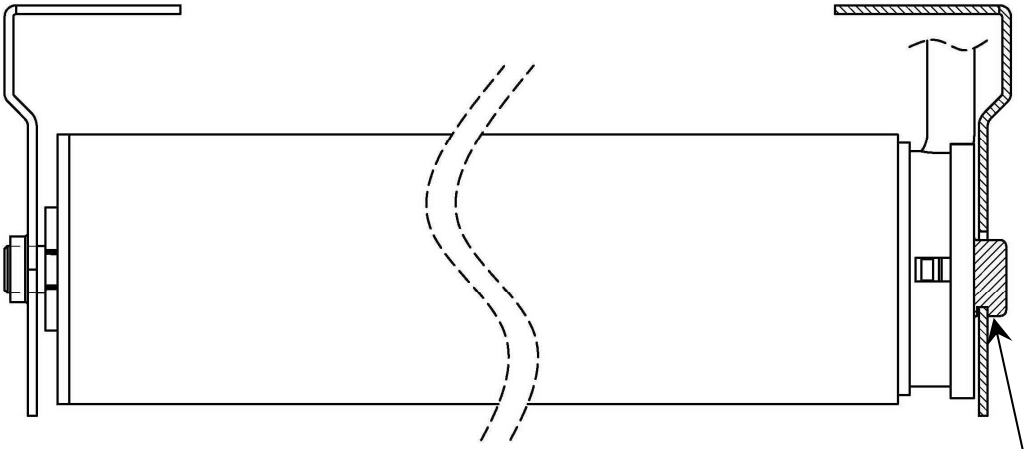

Notice！The positioning slot should be firmly fixed into the bracket.

9. **Connect to the electric power:** Connect power cord to AC power before setting and operation. ◦

■ Battery installation

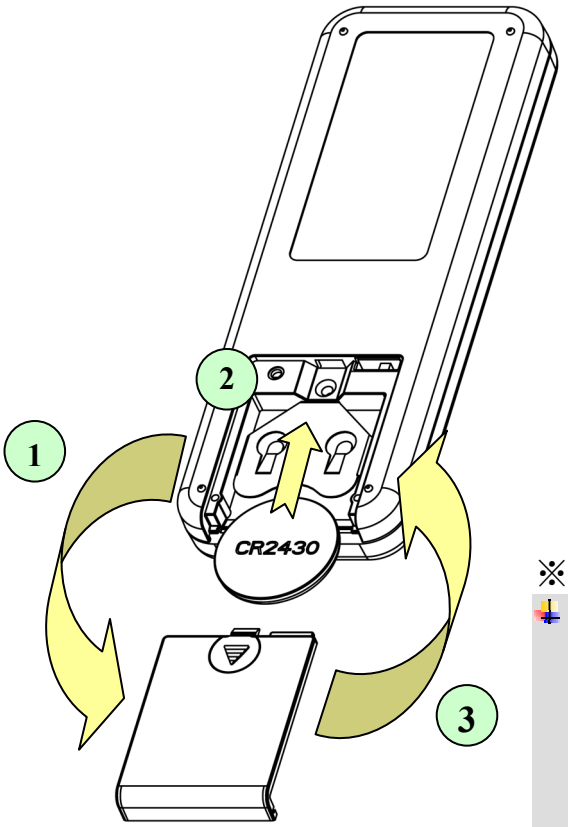

1. Open the battery cover
2. Insert the battery (notice the polarity ⊕/⊖)
3. Close the battery cover
4. Battery specification: DC 3V (CR2430)

※ Notice:

About the battery

- The battery provided with the product is prepared for your initial use.
- For the battery replacement, please use a battery with the same specifications.
- If the remote control is not going to be used for a long time, please take the battery out.

- **Screen display sequences after installing battery**

1. All icons appear after installing battery

G1 G2 G3 G4
[1] [2] [3] [4] [5] [6]
[7] [8] [9] [10] [11] [12]
[13] [14] [15] [16] [All] [OK]

2. Battery icon flashes 2 times than disappear, remote control is ready for using after battery icon disappear.

G1 G2 G3 G4
[1] 2 3 4 5 6
7 8 9 10 11 12
13 14 15 16 All

5.Low battery

G1 G2 G3 G4
[1] 2 3 4 5 6
7 8 9 10 11 12
13 14 15 16 All

It could not do settings while the battery icon flashes,please change a new one immediately

3.1 In Setting Mode:

[1] 2 3 4 5 6
7 8 9 10 11 12
13 14 15 16

only Window Channels 1 ~ 16 appear.

3.2 In User Mode:

G1 G2 G3 G4
[1] 2 3 4 5 6
7 8 9 10 11 12
13 14 15 16 All

appear Group Channels, Window Channels, and All.

4. If **[All]** is selected, Group Channels and Window Channels will disappear.

[All]

Switch Setting Mode / User Mode

1. Please switch the remote control to【**Setting Mode**】when the motor needs settings, and switch to【**User Mode**】when the motor is ready to be operated.
2. To switch between【**Setting Mode**】and【**User Mode**】should be achieved on the remote control.
3. **Mode check：**

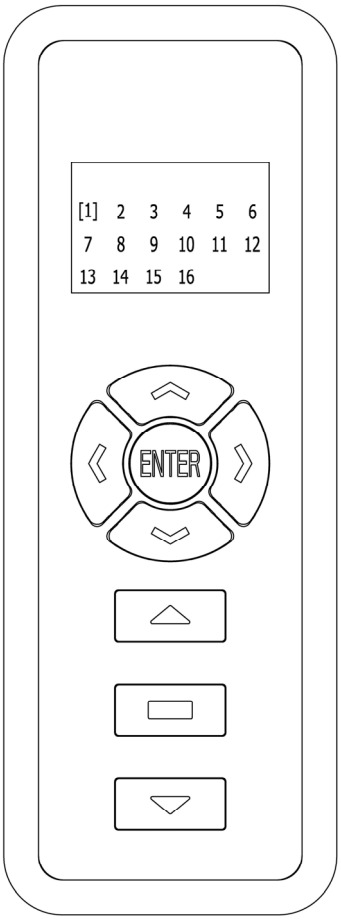

【Setting Mode】

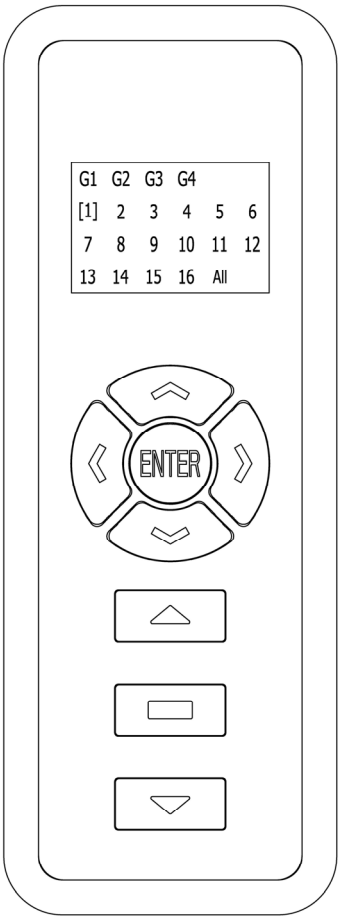

【User Mode】

The LCD screen appears Window Channels 1~16

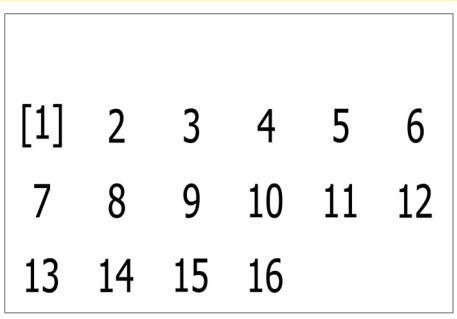

the screen appears Group Channels G1~G4, Window Channels 1~16, and All

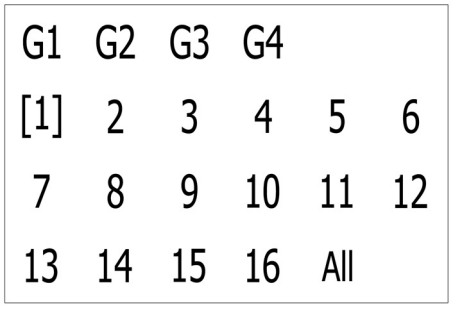

4. Mode Switch：

- Open the battery cover on the remote control.
- Toggle the【**Mode Selection Switch**】located above the battery.
  Note: It is necessary to use a thin rod to toggle the switch.
- After finish toggling【**Mode Selection Switch**】, close the battery cover immediately.

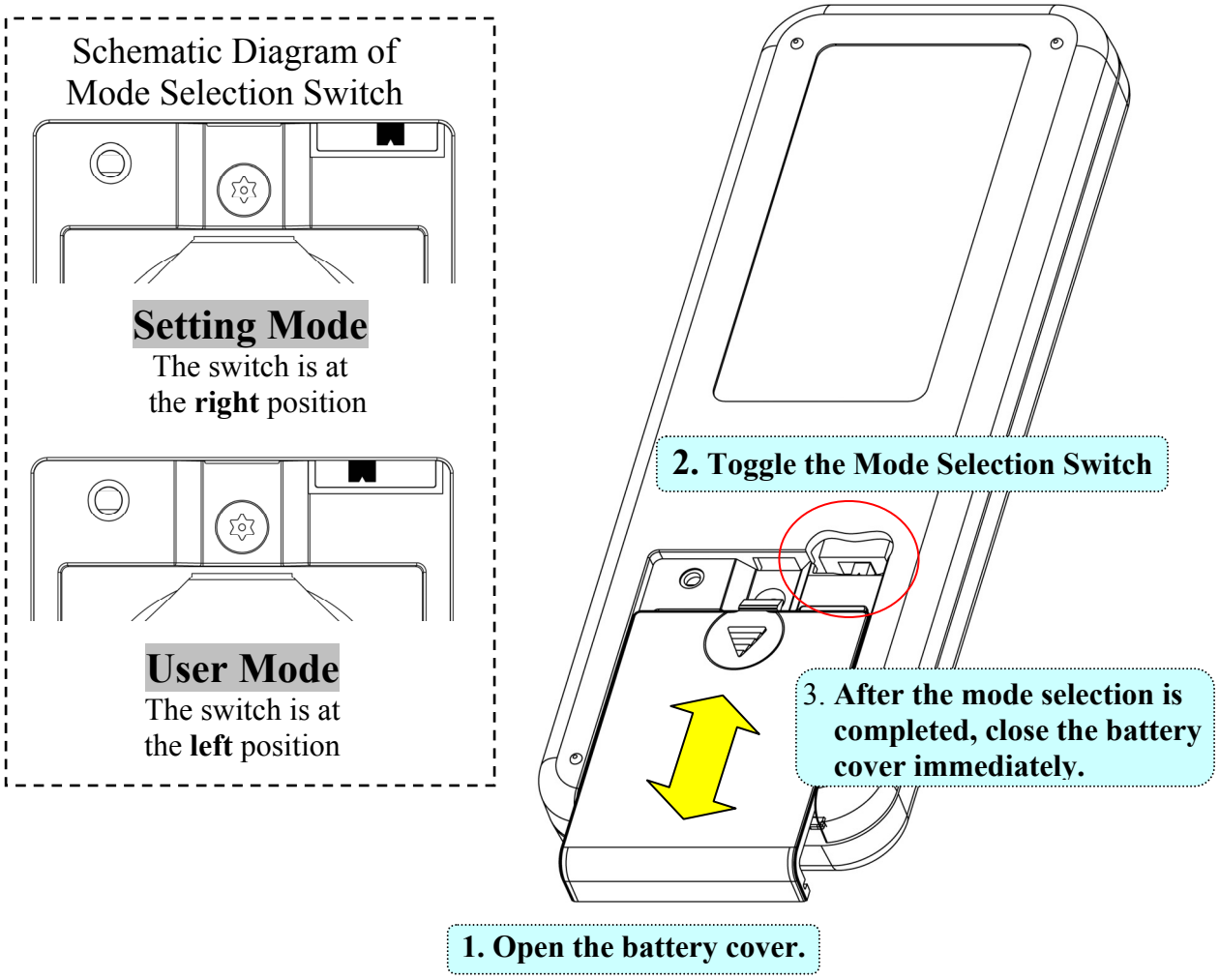

※Notice:

- Unless the motor requires reset, please keep the 【**Mode Selection Switch**】in【**User Mode**】.

Switch blinds system

1. The tubular motor could operate either【**Roller system**】or【**Venetian system**】.

   【**Roller system**】**:** It could not adjust by degrees on User Mode, but only could on Setting Mode.

   【**Venetian system**】**:** It could adjust by degrees both on User Mode and Setting Mode.

2. **How to switch:**

   - Switch the remote control to【Setting Mode】.
   - To enter【Roller system】, press both【**UP**】&【**Enter**】for 2 seconds until the cursor [ ] lit.
   - To enter【Venetian system】, press both【**DOWN**】&【**Enter**】for 2 seconds until the cursor [ ] lit.

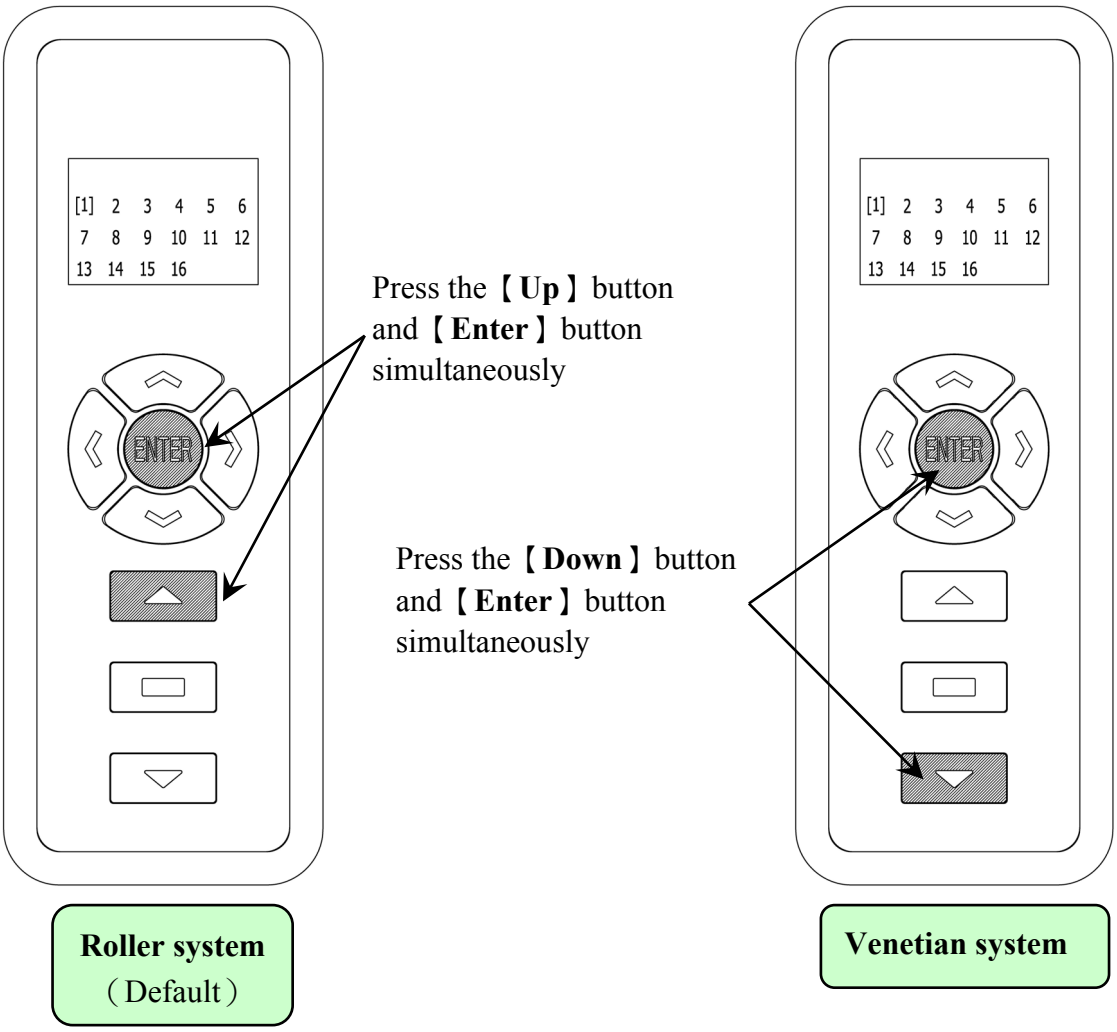

※Notice:

- Once the system has been chosen, all channels are in the same system.
- Roller System is the initial setting from factory.

Set Connection Between Motor and Remote Control

1. Switch the remote control to【**Setting Mode**】（P12）。
2. **Channel Selection:**

   Press any button of「∧」、「∨」、「<」、「>」to select the channel needs to be connected.

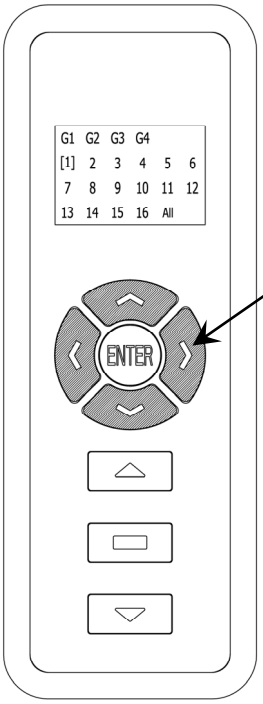

Press any button of【∧】、【∨】、【<】、【>】to move cursor [ ] to the target channel

3. **Code**：To establish a connection between the motor and the remote control.

   ● Press【**Code**】on the motor for 1 second, the motor will respond “beep “.

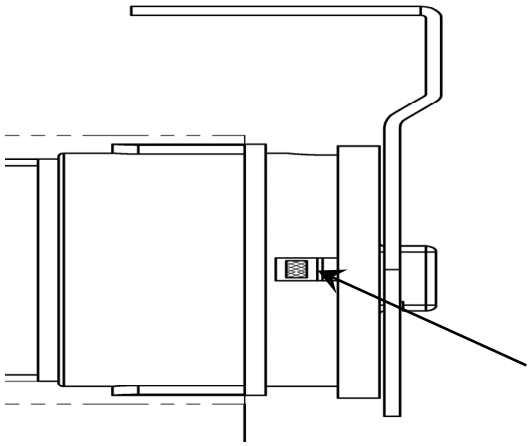

Press the【**Code**】to start code identification.

- Press【**Up**】and【**Down**】simultaneously ; when the motor responds with a "**beeping**" sound, the code identification process is complete and the remote control is ready to control this motor.

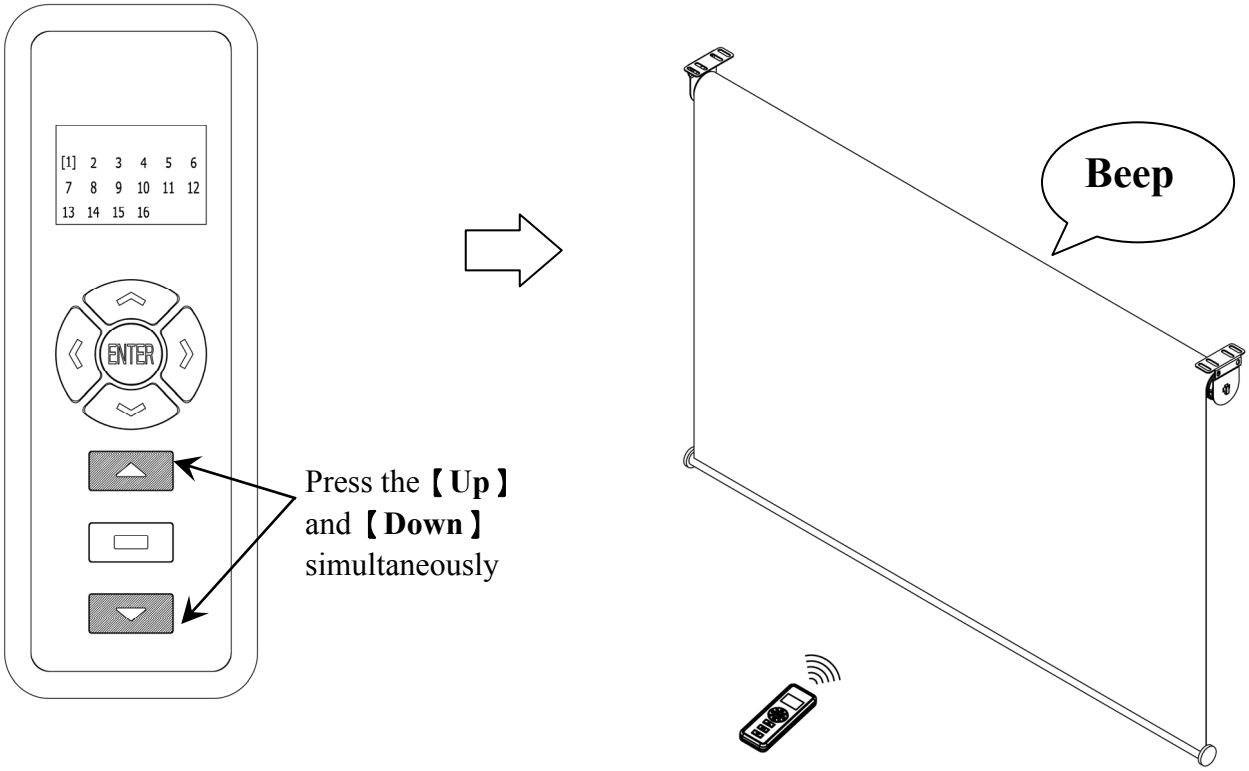

※Notice:

- Unless it is necessary to establish connection again, please do not press the【**Code**】 for more than **2** seconds.
- To avoid interference, please set the connection one by one in the same building.

Cancel Connection

1. Cancel Connection：Press【**Code**】on the motor for **5** seconds; when the motor responds with a "**beeping**" sound, the connection to all remote controls has been cleared.

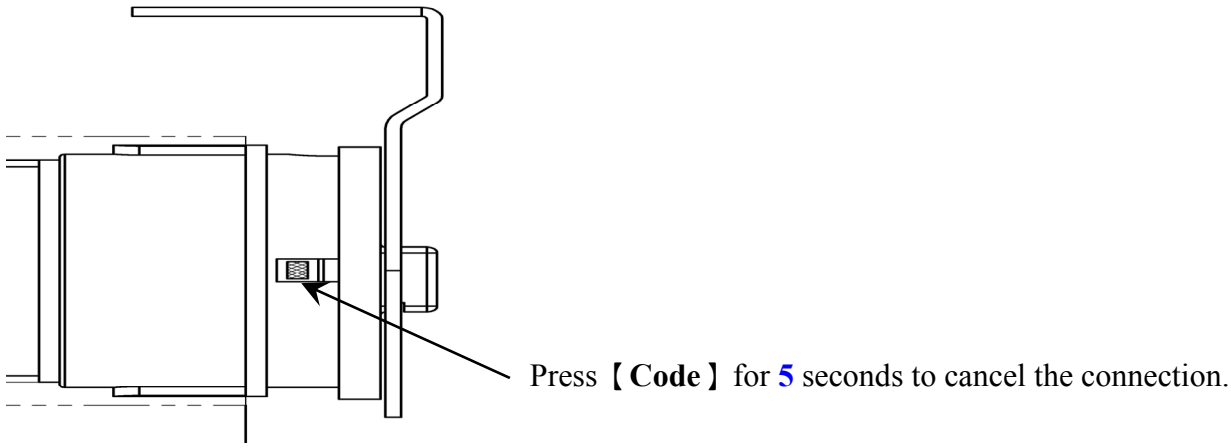

Switch Between Forward and Backward

1. Switch the remote control to【**Setting Mode**】（P12）。
2. **Switch Between Forward and Backward Rotations**：
   Press【**Stop**】for 3 seconds; when the motor responds with a "**beeping**" sound, the process for switching between forward and backward rotation is complete.

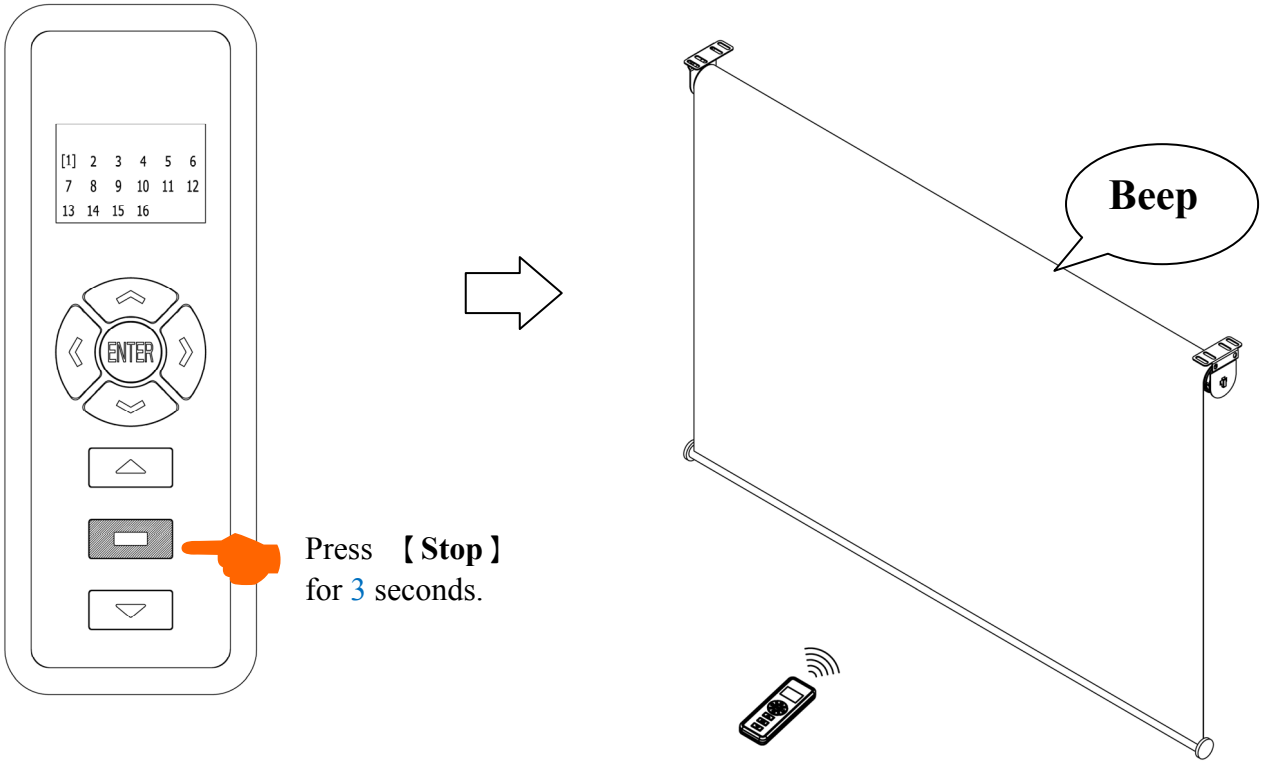

※Notice:

- Unless it is necessary <u>to change the rotation direction</u> , please do not press【Stop】for more than **3** seconds.
- It requires to reset the upper/lower limit again if the rotation direction has been changed after the setting of upper/lower limit is complete.

Set Upper/Lower Limit

1. Switch the remote control to【**Setting Mode**】（P12）。
2. **Enter the Upper Limit Setting Mode:**
   - Press【**Up**】and【**Stop**】simultaneously; when the motor responds with a "**beeping**" sound, it enters the Upper Limit Setting Mode.

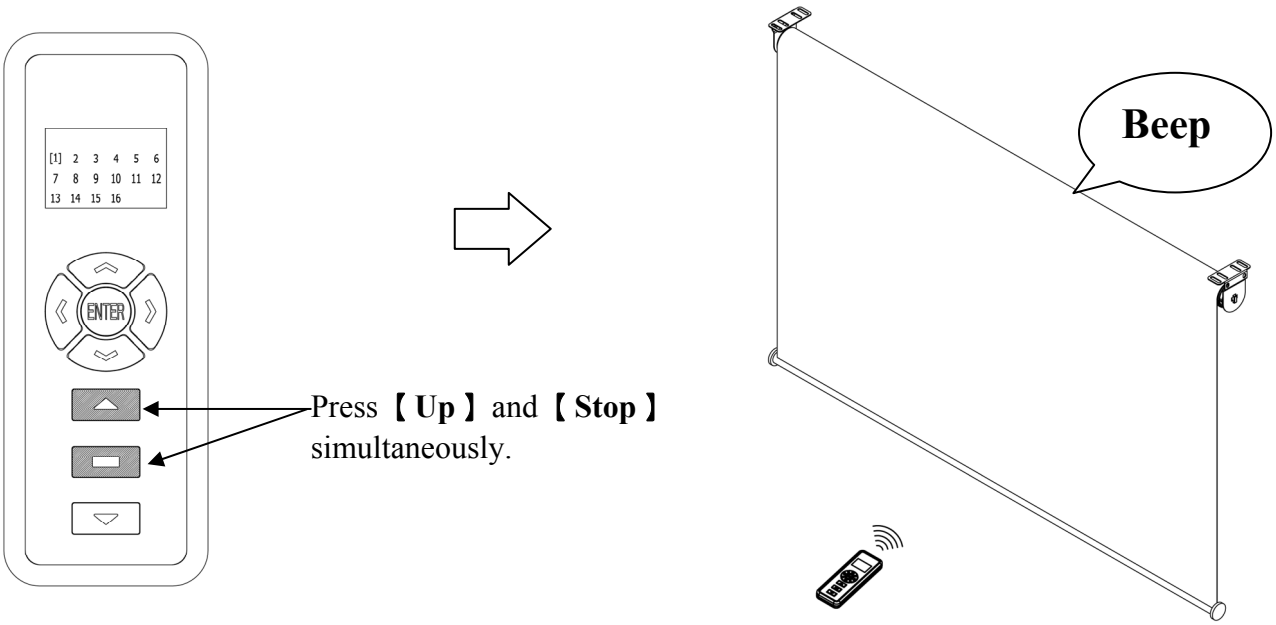

3. **Set the Upper Limit:**
   - Use remote control to lift blinds at the target position for setting the upper limit.
   - During this operation, please perform【**Switch Between Forward and Backward Rotations**】if necessary.（P16）
   - Press【**Stop**】and【**Enter**】 simultaneously; when the motor responds with a "**beeping**" sound, the upper limit setting is complete.

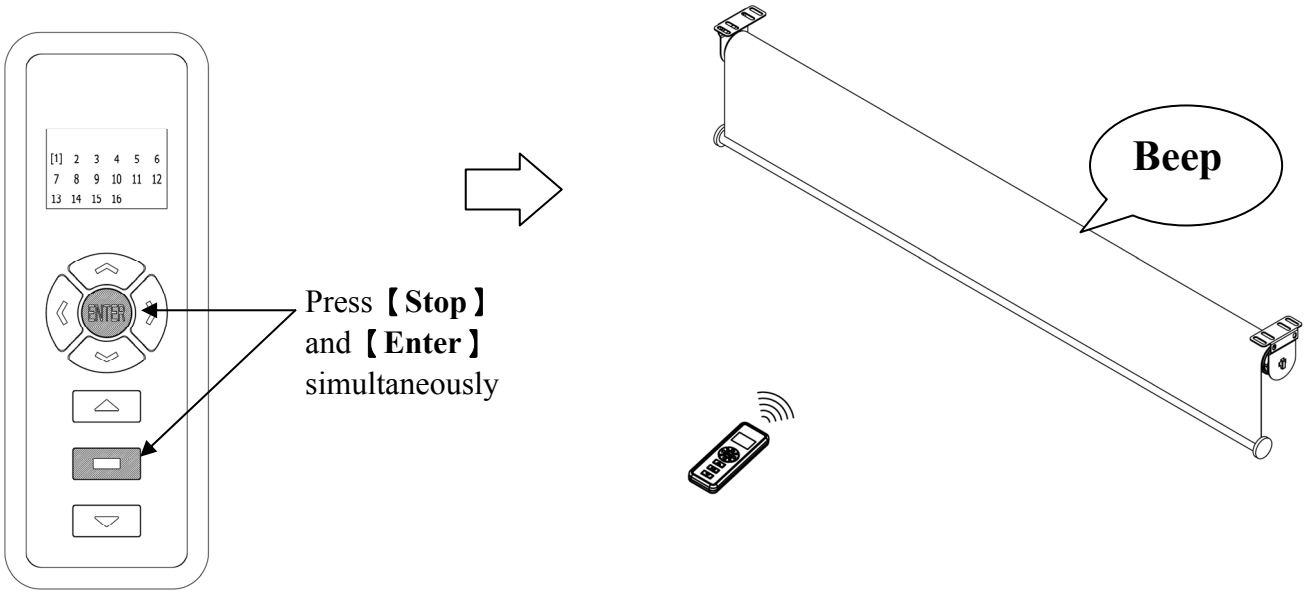

4. Enter the Lower Limit Setting:

- Press 【**Stop**】and【**Down**】simultaneously; when the motor responds with a "**beeping**" sound, it enters the Lower Limit Setting Mode.

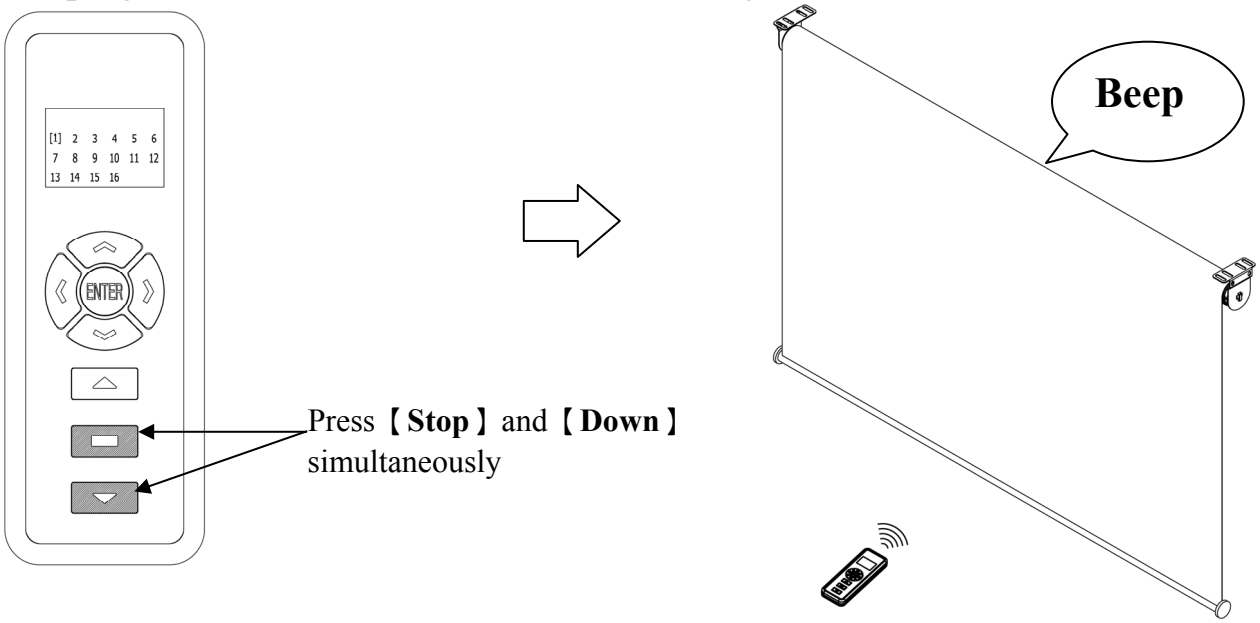

5. Set the Lower Limit:

- Use remote control to lift blinds at the target position for setting the lower limit.
- Press【**Stop**】and【**Enter**】 simultaneously; when the motor responds with a "**beeping**" sound, the lower limit setting is complete.

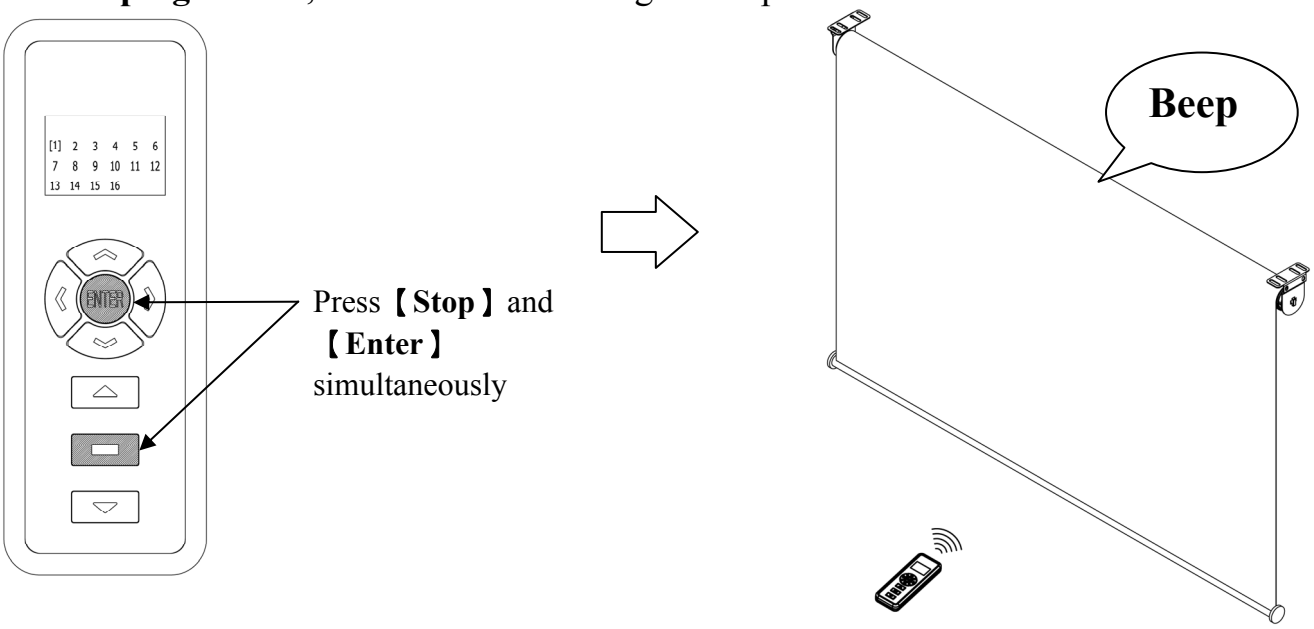

6. If need to reset the upper/lower limit again, please repeat 「Step 2~3」or 「Steps 4~5」.

※Notice:

- After the【**Upper/Lower Limit Setting**】is complete, please toggle the【**Mode Selection Switch**】back to【**User Mode**】.
- If need to reset the limit position, either upper limit setting or lower limit setting could be executed separately.

Set Group Control

1. Switch the remote control to【**User Mode**】（P12）。
2. **Select Group:** Press any button of 「∧」、「∨」、「<」、「>」 to move cursor [ ] to the target group channels G1 ~ G4 which needs to be executed. The SSRC16C remote control provides up to 4 groups to perform.

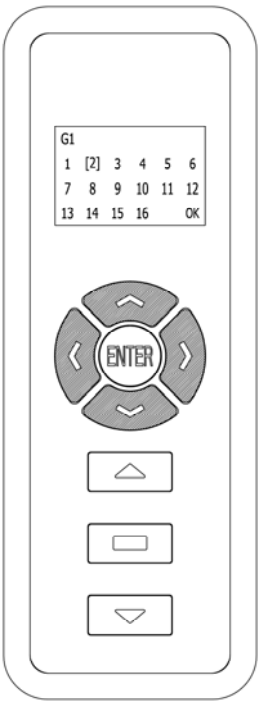

Press any of them to move cursor

Select group

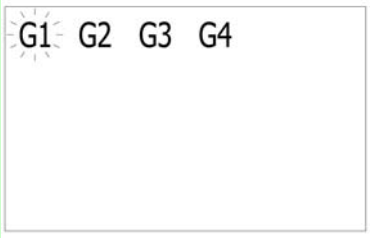

Select target group,then the selected group channel is flash.

3. **Enter group setting:** Press【**Enter**】for 3 seconds to enter group setting.

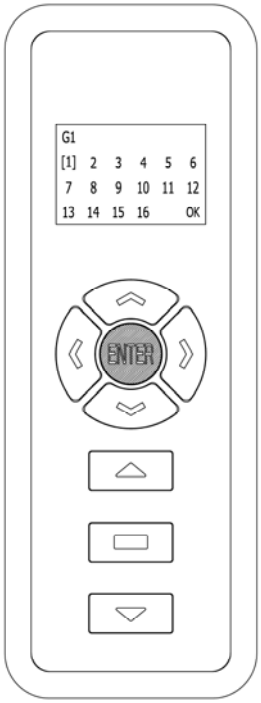

Press【**Enter**】for 3 sec.

Enter group setting

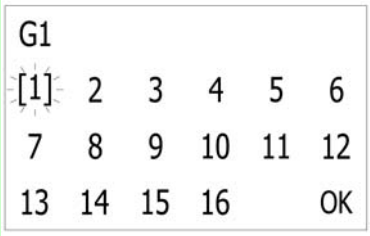

Press【**Enter**】for 3 seconds until the group icon G2~G4 disappear, and the cursor [ ] on the window channel 1 is flash.

4. **Select window:** Press any button of 「∧」、「∨」、「<」、「>」 to move cursor [ ] to the target window.

5. **Join window:** Press【**Enter**】 to join window in this group and the cursor [ ] will stay on the window once it is joined, another flash cursor [ ] will be stand by after the previous window is joined.

Join windows in the group

G1
[1] [2] 3 4 5 6
7 8 9 10 11 12
13 14 15 16 OK

Press【Enter】 to join window in this group.

6. **Confirm group:** Once all windows are selected and joined, move cursor [ ] to OK and press【Enter】to complete the group setting。

Confirm group

G1
[1] [2] 3 4 5 6
7 8 9 10 11 12
13 14 15 16 [OK]

Move cursor to **OK** and press【**Enter**】

Group setting complete

G1 G2 G3 G4
1 2

The group icon is flash after group setting complete. Only joined windows appear under this group icon.

7. **To add or to remove window from a group:**

Follow by the above step 1 to step 4 , press 【**Enter**】 to join the new window, and the cursor **[ ]** stay on the new joined window. Press 【**Enter**】to remove the joined window, the cursor **[ ]** become flash on the removed window。

Duplicate Remote Control

This function allows to duplicate codes from a remote control to another without pressing the "Code" button on motor .

1. Switch the original remote control (**RM-A**) and the duplicate one (**RM-B**) to 【**Setting Mode**】 （P12）。
2. Select the channel needs to be copied on **RM-A**.
3. Open the battery cover on RM-A, use a thin rod to press shortly on the 【**Copy**】 button located above the battery, when the motor responds with a beep sound then the motor is ready to be connected。

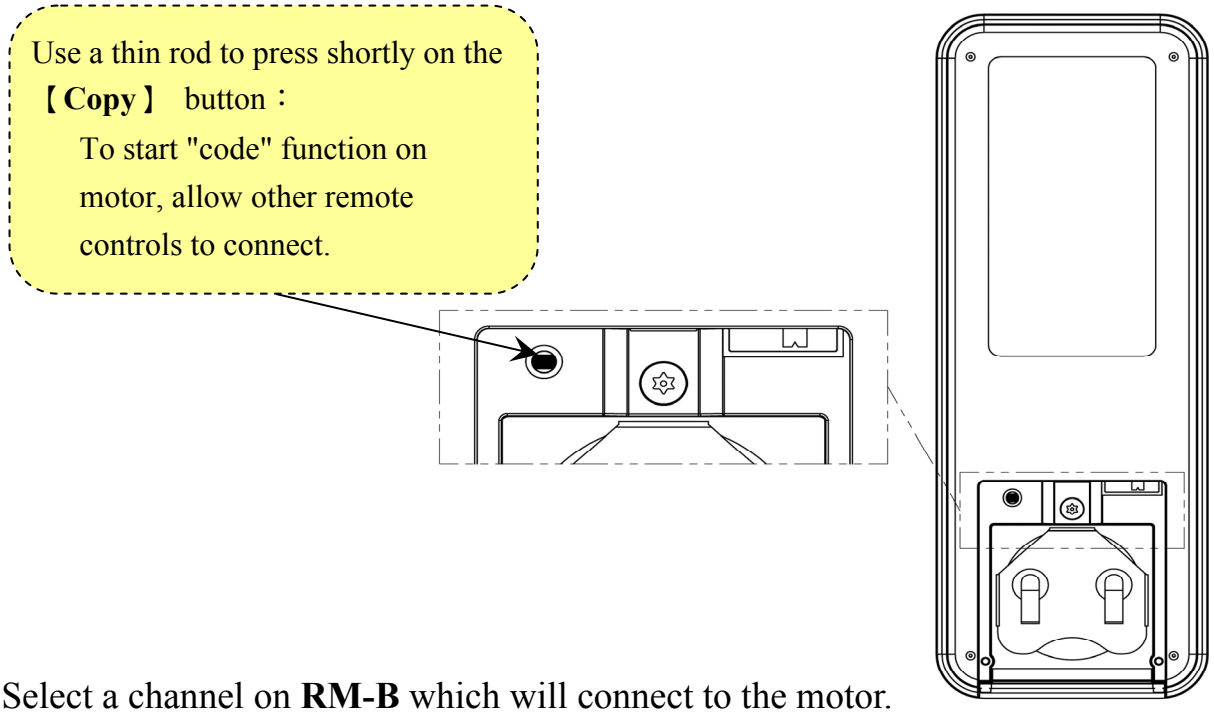

4. Select a channel on **RM-B** which will connect to the motor.
5. Press【**Up**】and【**Down**】on RM-B simultaneously, it completes receiving codes when the motor responds with beep sound.

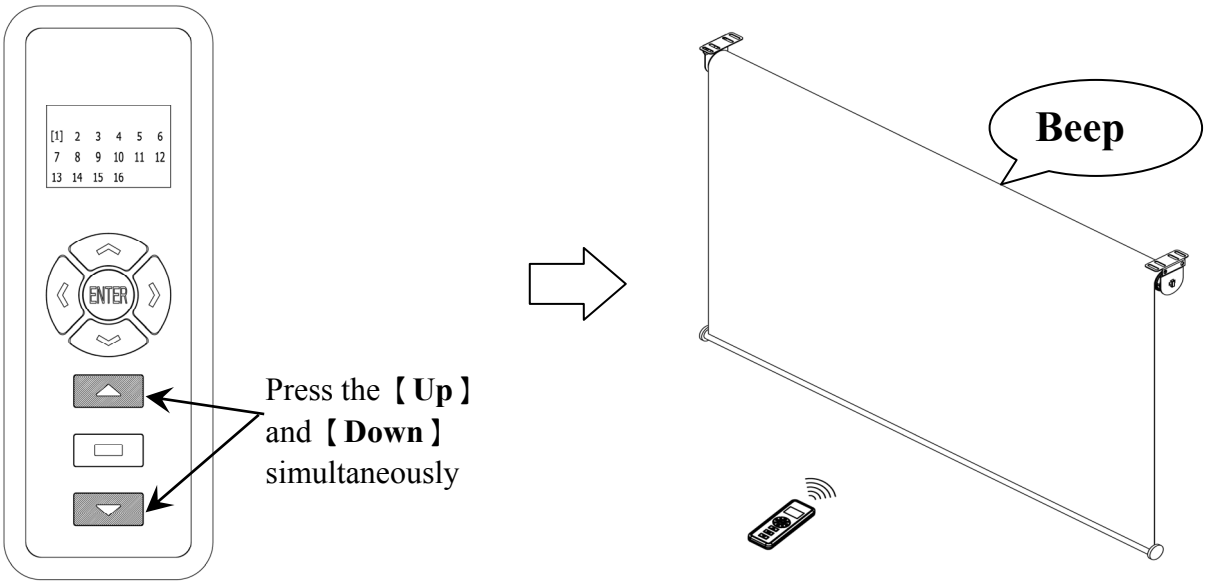

Cancel Other Remote Controls

This function works if there are many remote controls connect to one motor, to preserve only one remote control and to cancel the connections between motor and the other remote controls.

1. Switch the preserved remote control to【**Setting Mode**】（P12）。
2. Select the channel needs to be preserved.
3. Open the battery cover on preserved remote control, use a thin rod to press for 3 seconds on the【**Copy**】button located above the battery, when the motor responds with a beep sound then the connections between motor and the other remote controls has been deleted except for the preserved one.

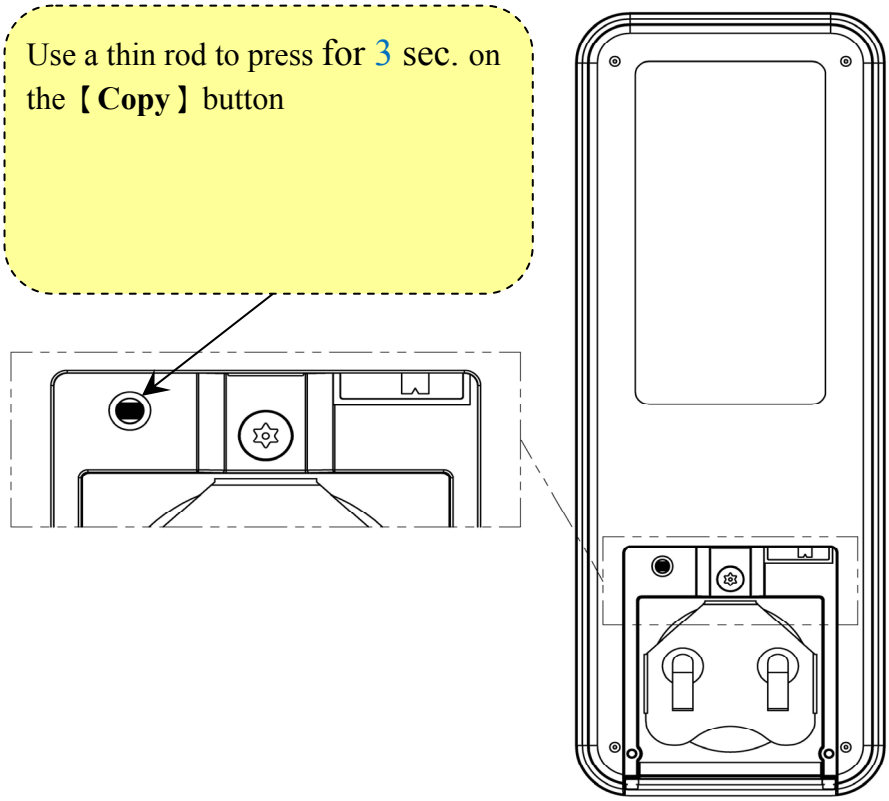

※Notice:

- Each time to duplicate or delete remote controls, only one channel is allowed. Please repeat the steps if necessary.
- After the【Duplicate codes / Delete codes】is complete, please toggle the 【**Mode Selection Switch**】back to【**User Mode**】.

Set / Cancel the Preferred Positions

1. Switch the remote control to【User Mode】(P12)。
2. Each motor could set 2 preferred positions exclude the upper and lower limit.
3. **Set preferred position:**
   - Use remote control to lift blinds to target positions.
   - Press【**Stop**】and【**Enter**】simultaneously, it is complete when motor responds with beep sound.
4. **Cancel preferred position:**
   - Use remote control to lift blinds to target preferred positions.
   - Press【**Stop**】and【**Enter**】simultaneously, it is complete when motor responds with beep sound。

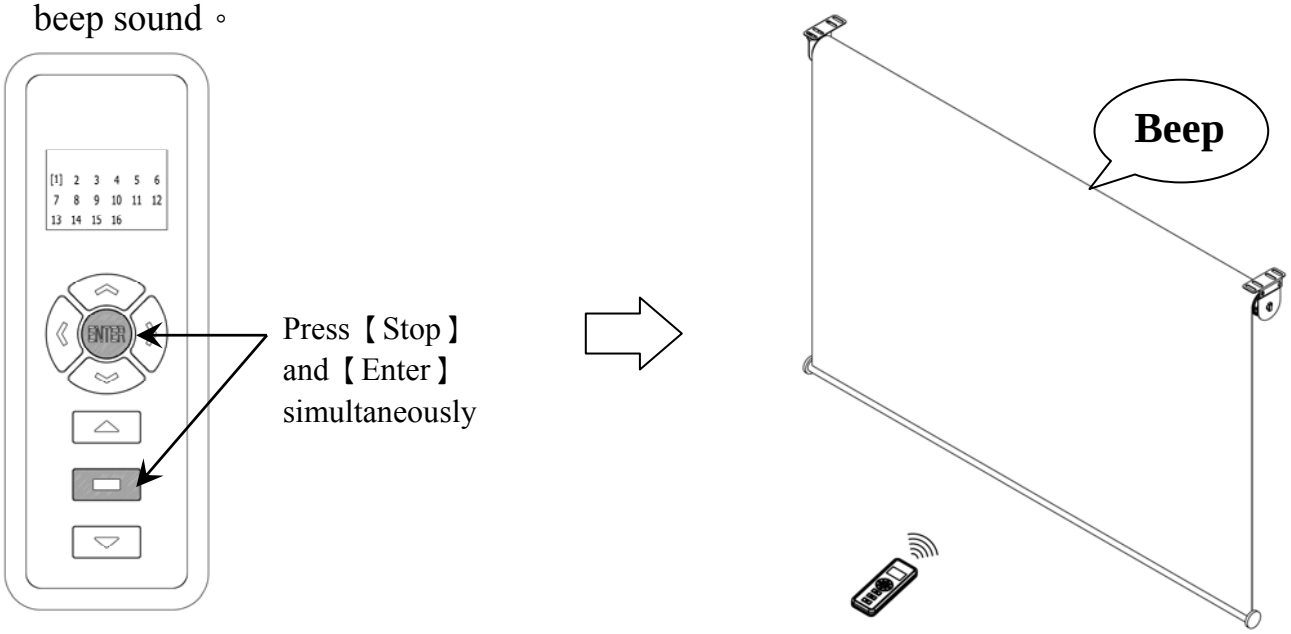

5. **Notice!** If 2 preferred positions are configured, the motor will not receive the command【**Set the Preferred Position**】any more.
6. If need to change the preferred position, please cancel one of the preferred position first.

※Notice:

Before setting the Preferred Position, please make sure that the【**Mode Selection Switch**】has been toggled to【**User Mode**】.

Move to Preferred Position

1. After settings, press【**Stop**】for 3 seconds to move to preferred positions.
2. Movement is different depends on quantity of preferred position:
   - One preferred position: press【**Stop**】for 3 seconds the blinds will move to this preferred position.
   - Two preferred positions: press【**Stop**】for 3 seconds the blinds will move to nearest preferred position, press【**Stop**】for 3 seconds again the blinds will move to another preferred position。

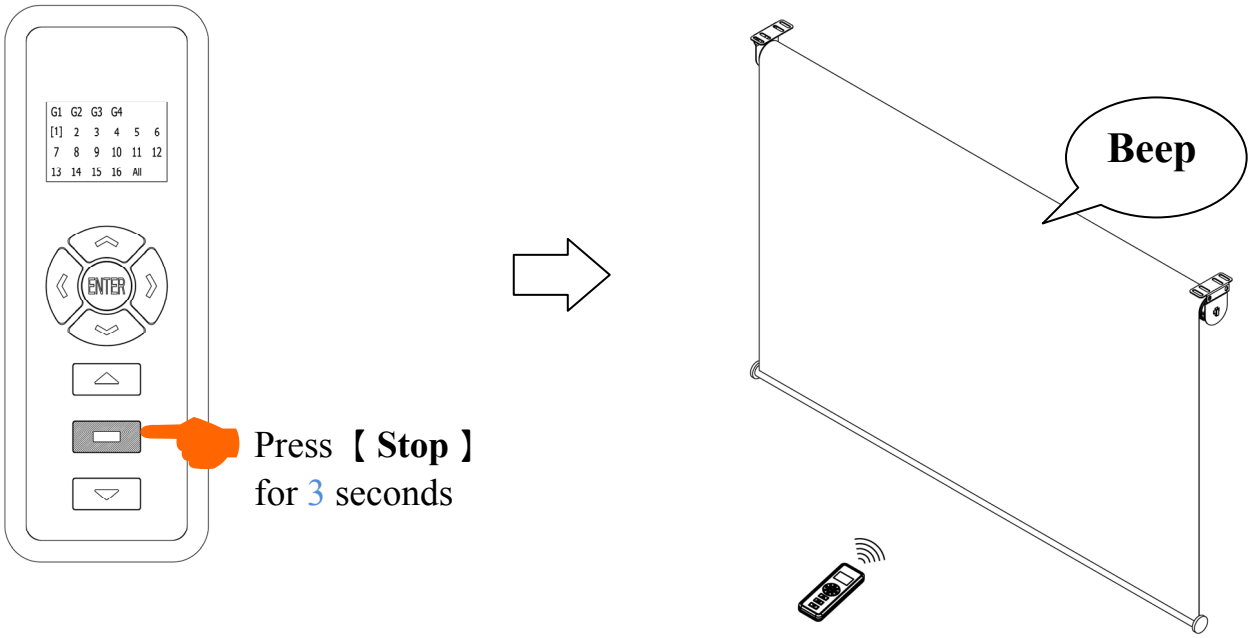

※Notice:

- Please make sure the【**Mode Selection Switch**】has been toggled to【**User Mode**】if need to move to preferred position.

Command Quick Reference

Mode Switch

Command	*Operations*	*Page*
Setting Mode	Toggle【**Mode Selection Switch**】to the right	P11~12
User Mode	Toggle【**Mode Selection Switch**】to the left	

Setting Mode

Command	*Operations*	*Page*
System Switch	**1. Roller System:** Press【**Up**】and【**Enter**】for 2 sec. **2. Venetian System:** Press【**Down**】and【**Enter**】 for 2 sec.	P13
Code Identification	**1.** Press【**Code**】button on motor. **2.** Press【**Up**】and【**Down**】.	P14~15
Cancel Connection	Press【**Code**】for 5 sec.	P15
Switch Between Forward and Backward Rotations	Press【**Stop**】for 3 sec.	P16
Set the Upper / Lower Limit	**1.** Press【**Stop**】and【**Up**】to enter setting mode. **2.** Press【**Stop**】and【**Enter**】to set upper limit. **3.** Press【**Stop**】and【**Down**】to enter lower limit. **4.** Press【**Stop**】and【**Enter**】to set lower limit.	P17~18
Duplicate Remote Control	**1.** Press【**Copy**】on the revised side on the original remote control **2.** Press【**Up**】and【**Down**】on the duplicated	P21
Cancel Other Remote Controls	Press【**Copy**】on the revised side on the preserved remote control for 3 sec.	P22

User Mode

Command	*Operations*	*Page*
Set Group Control	**1.** Press【Enter】for 3 sec. to enter group control setting mode **2.** Select windows and press【**Enter**】to join in the group **3.** Move to【**OK**】then press【**Enter**】to confirm group setting	P19~20
Set Preferred Position	Press【**Stop**】and【**Enter**】	P23
Cancel Preferred Position	Press【**Stop**】and【**Enter**】	P23
Move to Preferred Position	Press【**Stop**】for 3 sec.	P24

Troubleshooting

Conditions	*Causes*	*Solutions*
No reaction	No Power	Check the power supply
	Not connected with remote control	Perform the connection again（P14）
	Remote control is running out of energy	Replace the battery
	Remote control is damaged	Contact the distributor for service.
	Motor is damaged	Contact the distributor for service.
Connection and code identification fail	No Power	Check the power supply
	Remote control is running out of energy	Replace the battery
	Remote control mode error	Switch the operation mode（P11）
	Remote control is damaged	Contact the distributor for service.
	Motor is damaged	Contact the distributor for service.
No “beeping” sound during connection	No Power	Check the power supply
	Remote control is running out of energy	Replace the battery
	Buzzer is damaged	Contact the distributor for service.
	Remote control is damaged	Contact the distributor for service.
Not be able to perform the setting operation	Remote control is running out of energy	Replace the battery
	Remote control mode error	Switch the operation mode（P11）
	Remote control is damaged	Contact the distributor for service.
	Motor is damaged	Contact the distributor for service.
No “beeping” sound during the setting operation	Buzzer is damaged	Contact the distributor for service.
Cannot rotate to the target position.	Motor is damaged	Contact the distributor for service.
Cannot set the Preferred position.	Remote control mode error	Switch the operation mode（P11）
	Remote control is damaged	Contact the distributor for service.
	Motor is damaged	Contact the distributor for service.
LCD is not lit	Remote control is running out of energy	Replace the battery
	Remote control is damaged	Contact the distributor for service.
Not able to perform the multi-window control	Remote control mode error	Switch the operation mode（P11）
	Remote control is running out of energy	Replace the battery
	Remote control is damaged	Contact the distributor for service.

※If the above conditions occur, it is necessary to contact the distributor for services. Please do not disassemble the device by yourself.

Appendix

● Product Specifications：

■ SS40E series Brushless DC Tubular Motor：

- ◆Power Supply (input)：AC 100~230V；50~60Hz.
- ◆Operating Voltage：DC 27V.
- ◆Power Consumption：Rating 29W.
- ◆Net Weight：1.4 ㎏.
- ◆Dimensions：660 ㎜（L）× 38 ㎜（Dia.）.
- ◆Rotation Speed：N6R22－ 22 rpm、N5R27－ 27 rpm、N4R34－ 34 rpm.
- ◆Torque：N6R22－ 6 N-m、N5R27－ 5 N-m、N4R34－ 4 N-m.
- ◆Operation conditions: for indoor use only, room temperature 0℃~ 40℃, humidity 60%~90% RH.
- ◆Storage conditions: **to store horizontally** in temperature 10℃~ 45℃.
- ◆Favorable loads: within 15 ㎏.
- ◆Rating operation duration: 1 hour.

■ SSRC16C Remote Control：

- ◆16 channel multi-window control
- ◆Power Supply (input): DC 3V (CR 2430)
- ◆Dimensions: 125.5 ㎜(L) x 45.5 ㎜(W) x 14 ㎜(H)。
- ◆Power Consumption：10μA。
- ◆Emission frequency：（ASK）433.92 MHz。
- ◆Code set：more than 16 million sets.
- ◆Working distance：10~120 meters (may vary due to obstacles)
- ◆Warranty：1 year.

杉信實業股份有限公司
SAN HSIN PLASTECH CO., LTD.

No.17, Jianguo E. Rd., Taoyuan City, Taoyuan County 330, Taiwan (R.O.C.)
TEL:886-3-3647566 FAX:886-3-3647752
E-mail:info@sanhsin.com.tw
www.sanhsin.com.tw