Edge-corE

# Handbook

## ECW5210-L

## Enterprise Access Point

# FCC CAUTION

**This equipment has been tested and found to comply with the limits for a Class B digital device, pursuant to Part 15 of the FCC Rules. These limits are designed to provide reasonable protection against harmful interference in a residential installation. This equipment generates, uses and can radiate radio frequency energy and, if not installed and used in accordance with the instructions, may cause harmful interference to radio communications. However, there is no guarantee that interference will not occur in a particular installation. If this equipment does cause harmful interference to radio or television reception, which can be determined by turning the equipment off and on, the user is encouraged to try to correct the interference by one or more of the following measures:**

- **Reorient or relocate the receiving antenna.**
- **Increase the separation between the equipment and receiver.**
- **Connect the equipment into an outlet on a circuit different from that to which the receiver is connected.**
- **Consult the dealer or an experienced radio/TV technician for help.**

Any changes or modifications not expressly approved by the party responsible for compliance could void the user's authority to operate this equipment.

This device complies with Part 15 of the FCC Rules. Operation is subject to the following two conditions: (1) This device may not cause harmful interference, and (2) this device must accept any interference received, including interference that may cause undesired operation.

This device and its antenna(s) must not be co-located or operating in conjunction with any other antenna or transmitter.

For product available in the USA/Canada market, only channel 1~11 can be operated. Selection of other channels is not possible.

This device is restricted to indoor use when operated in the 5.15 to 5.25 GHz frequency range.

※ FCC requires this product to be used indoors for the frequency range 5.15 to 5.25 GHz to reduce the potential for harmful interference to co-channel Mobile Satellite systems.

**IMPORTANT NOTE:**

**FCC Radiation Exposure Statement:**

This equipment complies with FCC radiation exposure limits set forth for an uncontrolled environment. This equipment should be installed and operated with minimum distance 20cm between the radiator & your body.

# CE CAUTION

**Declaration of Conformity with Regard to the 1999/5/EC (R&TTE Directive) for**

**European Community, Switzerland, Norway, Iceland, and Liechtenstein**

**Model: ECW5210-L**

For 2.4 GHz radios, the device has been tested and passed the requirements of the following standards, and hence fulfills the EMC and safety requirements of R&TTE Directive within the CE marking requirement.

• Radio: EN 300.328

• EMC: EN 301.489-1, EN 301.489-17,

• EMC: EN 55022 Class B, EN 55024 + A1 + A2 including the followings:

EN 61000-3-2, EN 61000-3-3.

EN 61000-4-2, EN 61000-4-3, EN 61000-4-4,

EN 61000-4-5, EN 61000-4-6, EN 61000-4-11

• Safety: EN 60950-1 + A11,

**Caution:**

- This declaration is only valid for configurations (combinations of software, firmware, and hardware) provided and supported by Edgecore Networks Corporation. The use of software or firmware not provided and supported by Edgecore Networks Corporation. may result in the equipment no longer being compliant with the regulatory requirements.

European standards dictate maximum radiated transmit power of 100mW EIRP and frequency range 2.400-2.4835 GHz. This equipment is intended to be used in all EU and EFTA countries.

# Taiwan NCC Statement

根據 NCC 低功率電波輻射性電機管理辦法 規定:

| | |
|---|---|
| 第十二條 | 經型式認證合格之低功率射頻電機，非經許可，公司、商號或使用者均不得擅自變更頻率、加大功率或變更原設計之特性及功能。 |
| 第十四條 | 低功率射頻電機之使用不得影響飛航安全及干擾合法通信；經發現有干擾現象時，應立即停用，並改善至無干擾時方得繼續使用。前項合法通信，指依電信法規定作業之無線電通信。低功率射頻電機須忍受合法通信或工業、科學及醫療用電波輻射性電機設備之干擾。 |

在 5.25 ~ 5.35 秭赫頻帶內操作之無線資訊傳輸設備，限於室內使用。

減少電磁波影響，請妥適使用

# Preface

Edgecore ECW5210-L is a high-end, dual radio 802.11 b/g/n + ac MIMO Access Point (AP) with the best performance for business and industrial applications and is compliant with the latest industrial wireless security standards that are required in the tightly secured enterprise network environments.

ECW5210-L makes the wireless communication fast, secure and easy. It supports business grade security such as 802.1X, and Wi-Fi Protected Access (WPA and WPA2). The ECW5210-L supports multiple point-to-point wireless links to form wider wireless network coverage.

ECW5210-L also features multiple ESSIDs with VLAN tags and multiple Virtual APs; great for enterprise applications, such as separating traffic from different departments using different ESSIDs. The PoE Uplink port is able to receive power from Power over Ethernet (PoE) sourcing devices.

This Handbook provides instructions and reference materials to get you started with Edgecore ECW5210-L.

# Package Contents

1. Edgecore ECW5210-L x 1
2. Handbook x 1
3. Wall Mount Kit x 1
4. Ceiling Mount Kit x 1
5. DC Extension plug x 1

*It is recommended to keep the original packing material for possible future shipment when repair or maintenance is required. Any returned product should be packed in its original packaging to prevent damage during delivery.*

# System Overview

*ECW5210-L's Front Panel*

*ECW5210-L's Rear Panel*

| | | |
|---|---|---|
| **1** | **LED Indicators** | An LED indicator is available to show the uplink status |
| **2** | **12V ⎓ 2.5 A** | Attach power adaptor here |
| **3** | **Uplink (PoE) Port** | Offers uplink connection. This port can be used to connect to a controller, gateway, or directly to the Internet. 802.3at PoE is also supported |

# Hardware Installation

Please follow the steps mentioned below to install the hardware of ECW5210-L:

**1. Place the ECW5210-L at the best location.**

a) The best location for ECW5210-L is usually at the center of your intended wireless network.

Wall Mounting

- Secure wall-mount bracket on wall

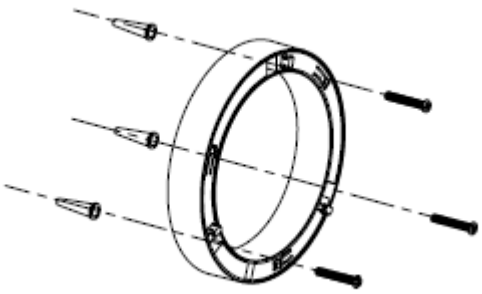

- Attach the Access Point to the dedicated slots on the mounting bracket

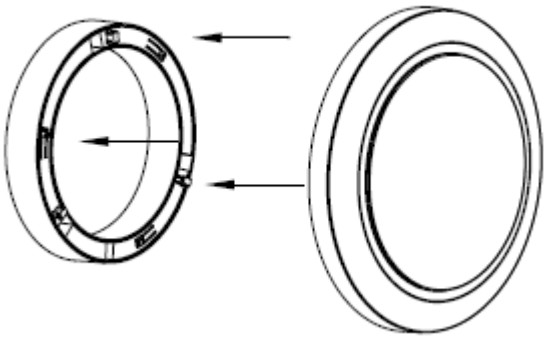

- Turn the Access Point clockwise as illustrated to fasten AP

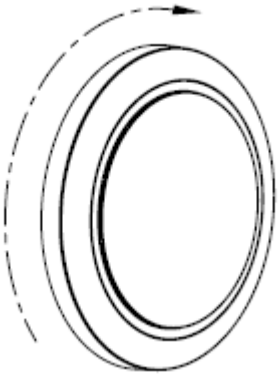

Ceiling Mount

- Secure ceiling-mount bracket on ceiling

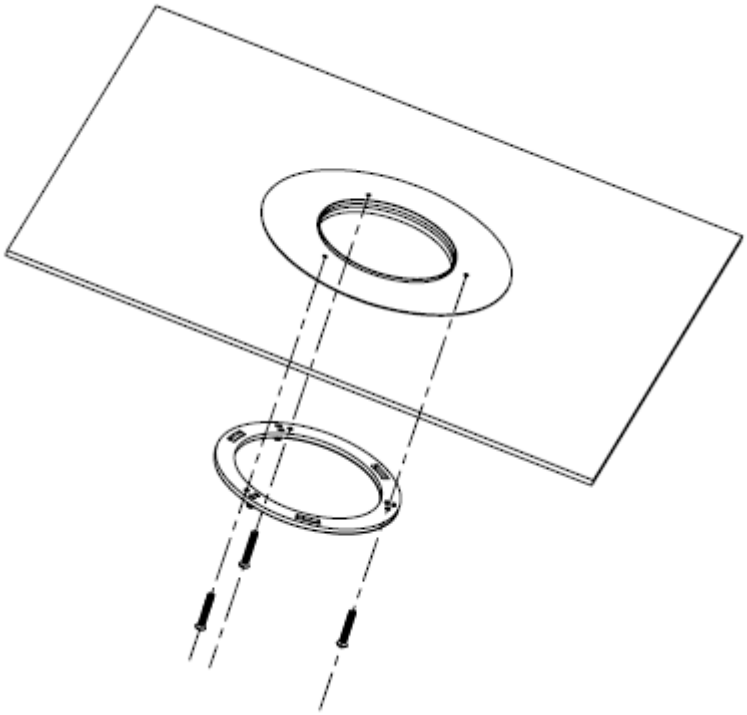

- Attach the Access Point to the dedicated slots on the mounting bracket

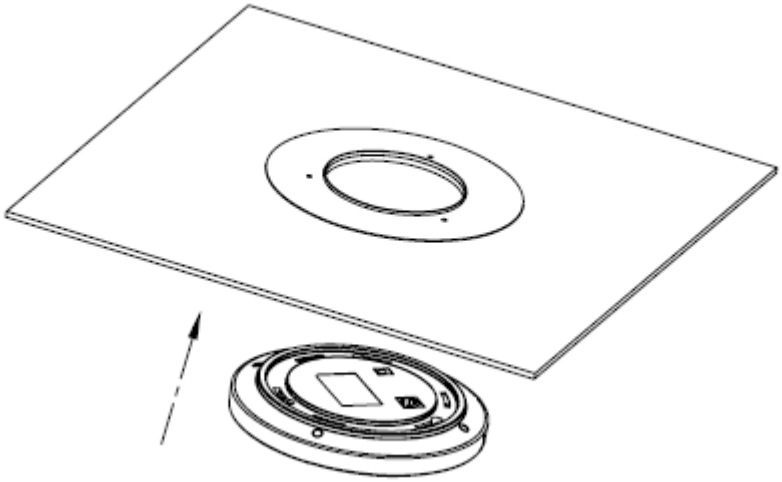

- Turn the Access Point clockwise as illustrated to fasten AP

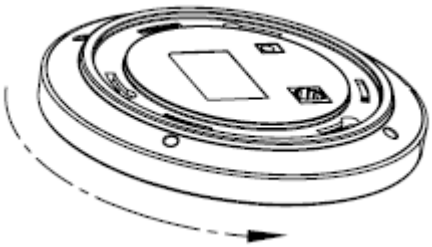

**2. Connect the ECW5210-L to your network device.**

Connect one end of the Ethernet cable to the Uplink port of ECW5210-L and the other end of the cable to a switch, a router, or a hub. ECW5210-L is then connected to your existing wired LAN network.

**3. Power on the ECW5210-L.**

There are two ways to supply power over to ECW5210-L.

- ECW5210-L Uplink port is capable of receiving DC currents. Connect an IEEE 802.3at-compliant PSE device (e.g. a PoE-switch) to the Uplink port of ECW5210-L with the Ethernet cable.
- Connect a 12V/2.5A adaptor (optional) to the DC power jack. If needed, use the DC extension plug included.

Now, the Hardware Installation is complete.

- *Using a different power adapter may damage this system.*

*To verify the wired connection between ECW5210-L and you switch / router / hub, please also check the LED status indicator of the respective network devices.*

# Getting Started

Edgecore ECW5210-L supports web-based configuration. When hardware installation is complete, ECW5210-L can be configured through a PC by using a web browser such as Mozilla Firefox 2.0 or Internet Explorer version 6.0 and above.

The default values of LAN IP address and subnet mask of ECW5210-L are:

**IP Address:** *192.168.1.10*

**Subnet Mask:** *255.255.255.0*

## Steps:

1. To access the Web Management Interface, connect the administrator PC to the Uplink port of ECW5210-L via an Ethernet cable. Then, set a static IP address on the same subnet mask as ECW5210-L in TCP/IP of your PC, such as the following example:

   **IP Address**: *192.168.1.100*

   **Subnet Mask**: *255.255.255.0*

2. Launch the web browser on your PC by entering the IP address of ECW5210-L (**http://192.168.1.10**) in the address field, and then press ***Enter***.

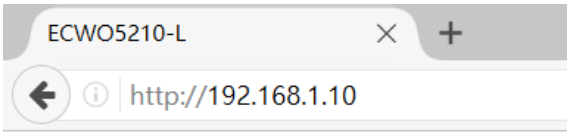


***Example of entering ECW5210-L's default IP Address via a web browser***

3. The following Admin Login Page will appear. Enter **"admin"** for both the *Username* and *Password* fields, and then click ***Login***.

***Administrator Login Page***

4. After a successful login to ECW5210-L, a **System Overview** page of the Web Management Interface will appear, as depicted below.

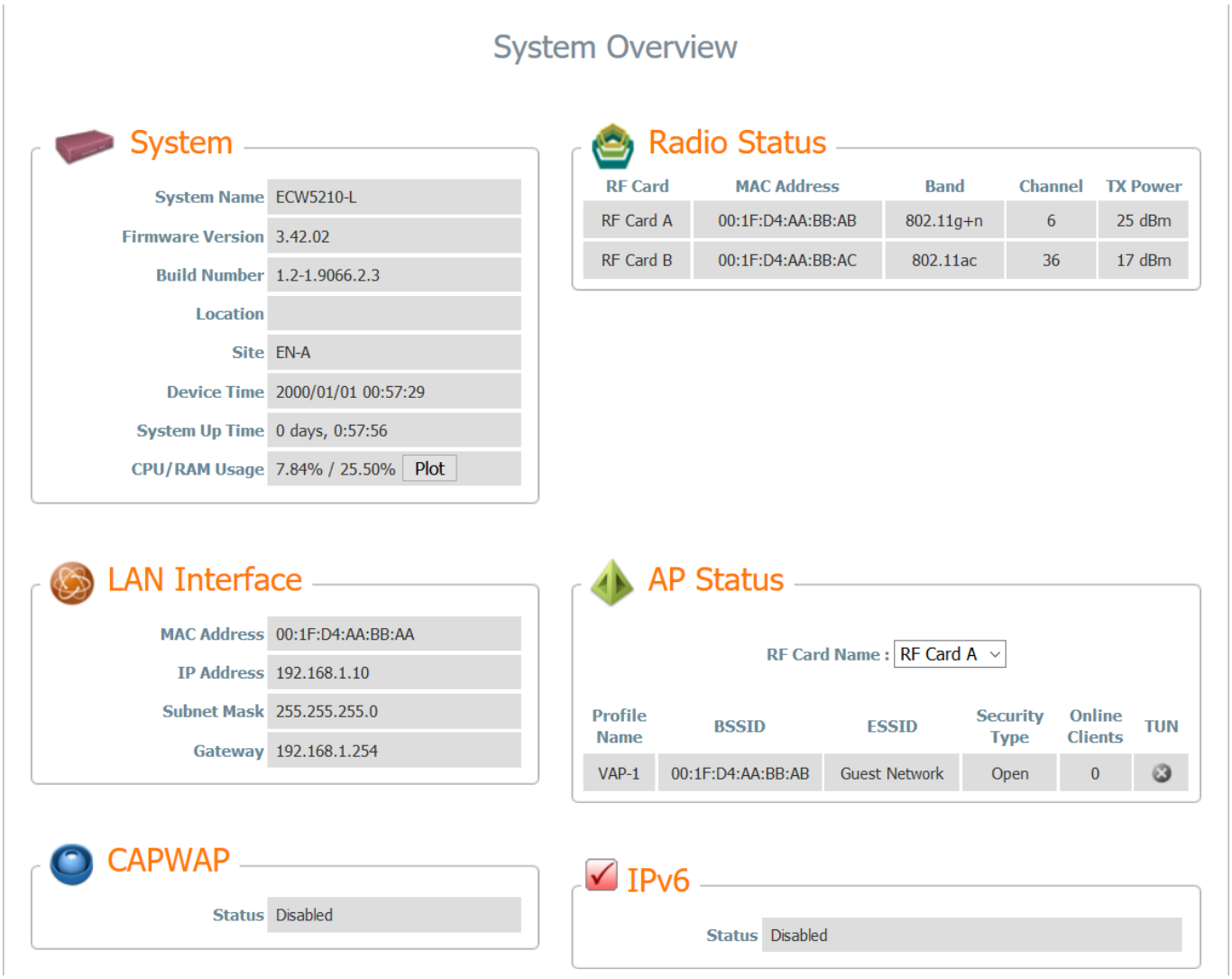


***The Web Management Interface - System Overview Page***

5. To logout, simply click on the ***Logout*** button at the upper right hand corner of the interface to return to the Administrator Login Page. Click ***OK*** to logout.

# Common Settings

## Step 1. Change Administrator's Password

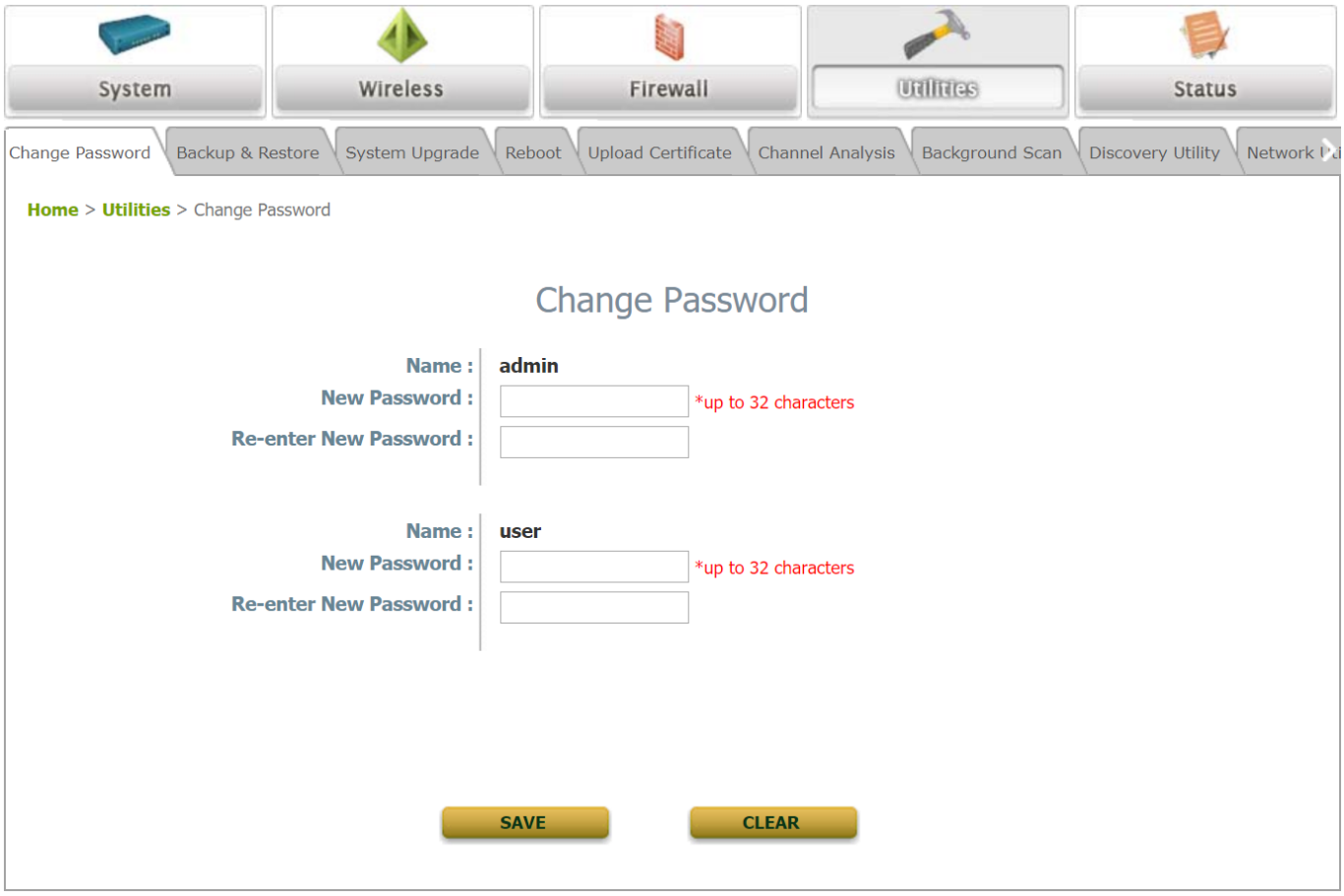


***Change Password Page***

- Click on the **Utilities** icon on the main menu, and select the **Change Password** tab.
- Enter a new password with a length of up to 32 characters, and retype it in the **Re-enter New Password** field.
- Click ***SAVE*** to save the changes.

## Step 2. Configure General AP (Access Point) Settings

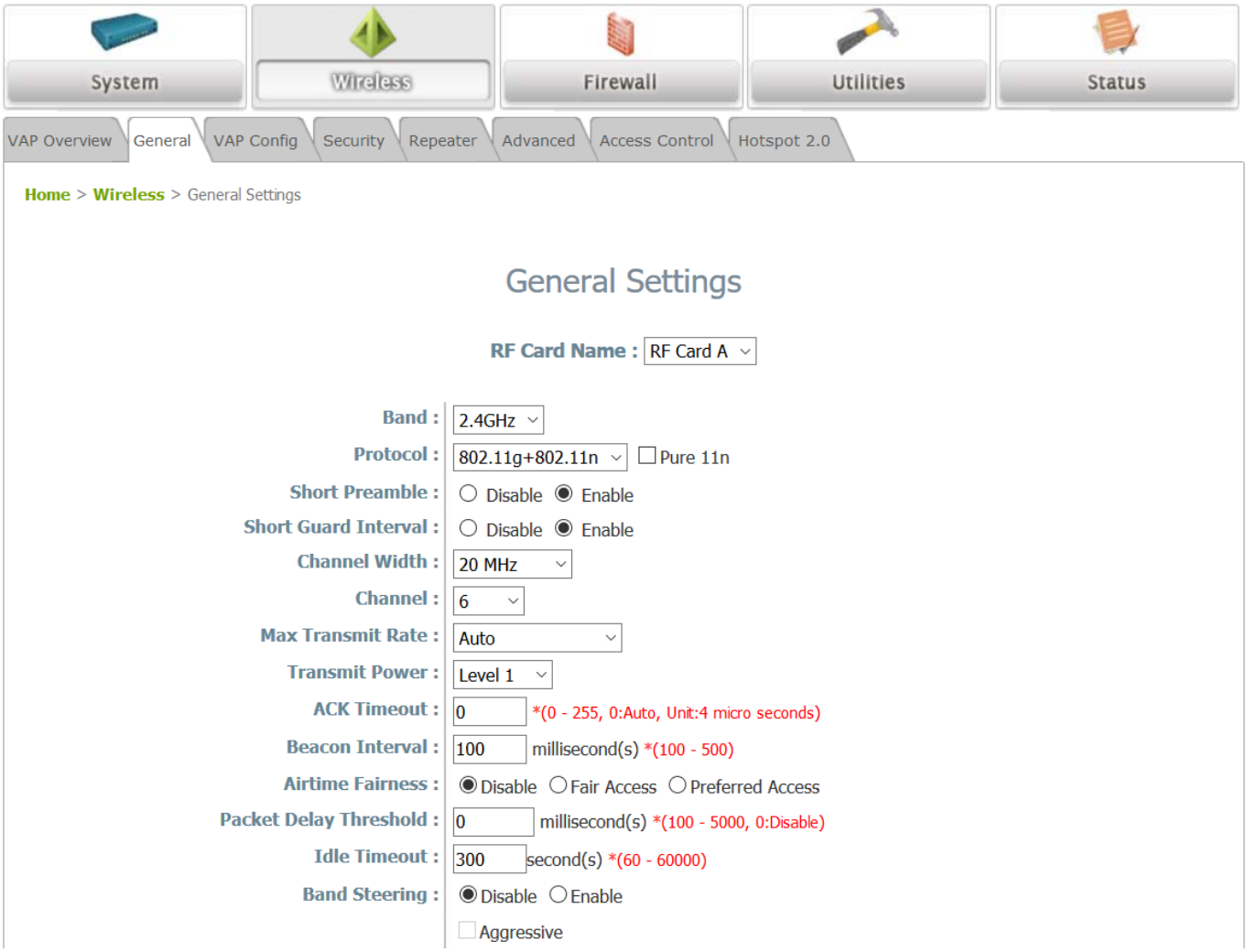


***Wireless General Settings Page***

- Click on the **Wireless** icon on the main menu, and then select the **General** tab.
- Determine the **Band**, **Protocol** and **Channel** settings:

  Select your preferred **Band**, **Protocol** and **Channel** for you wireless connection. For example, select **2.4GHz** for the band, **802.11g+802.11**n for the protocol and **6** for the channel.

**Note:** Admin should be aware of Dynamic Frequency Selection (DFS) mandated on some channels of the 5GHz band. When an ECW5210-L detects interference, this mechanism will limit the ability to broadcast the SSID on one of the channels listed below:

**1) Country Code: 841 (US)**
DFS Channels: 52 56 60 64 100 104 108 112 116 132 136 140 149 153 157 161 165

**2) Country Code: 250 (EU)**
DFS Channels: 52 56 60 64 100 104 108 112 116 120 124 128 132 136 140

## Step 3. Configure VAP (Virtual Access Point) Profile Settings

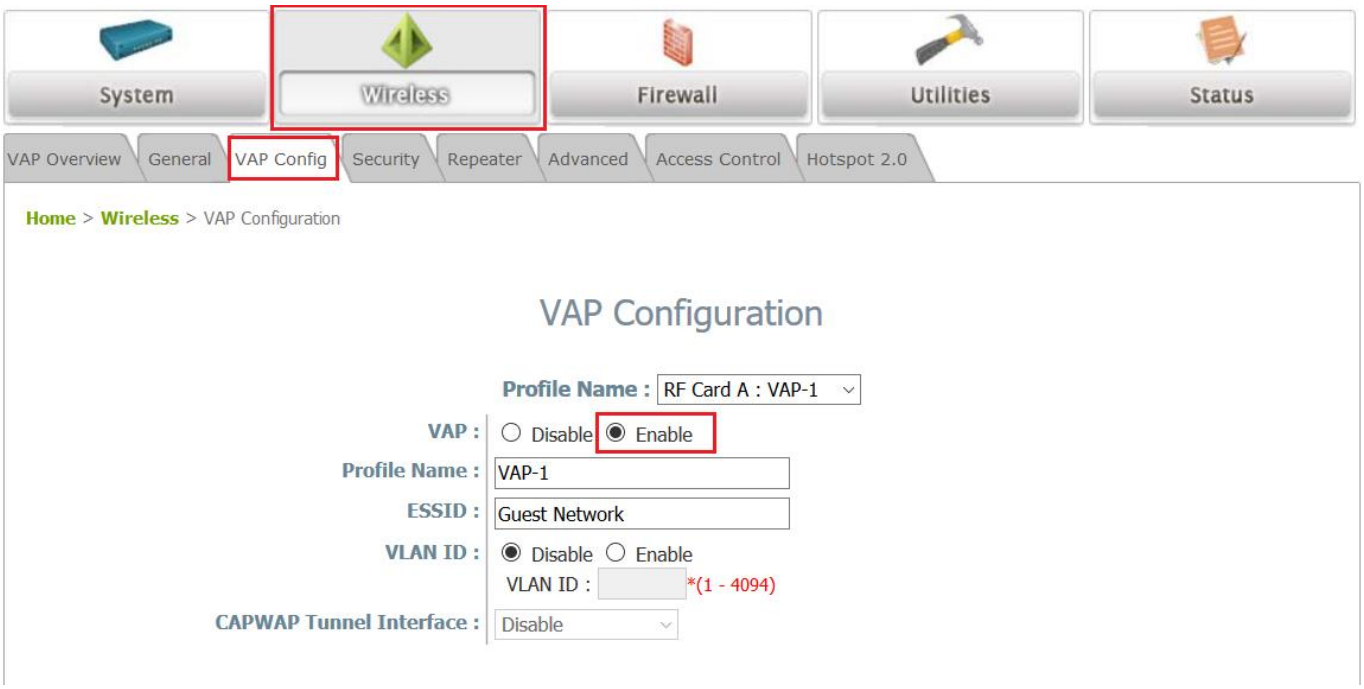


***VAP Configuration Page (VAP-1 shown)***

- ECW5210-L supports up to 16 virtual APs (VAPs) per RF Card.
- Configure VAP profile settings：

  (a) Select the **VAP Configuration** tab to configure the settings of the desired VAP.

  (b) Enable a specific VAP from the drop-down menu of **Profile Name** and configure related settings below.
- Check VAP status：

  After finishing VAP configuration, the status of enabled Virtual APs shall be reflected on the VAP Overview page.

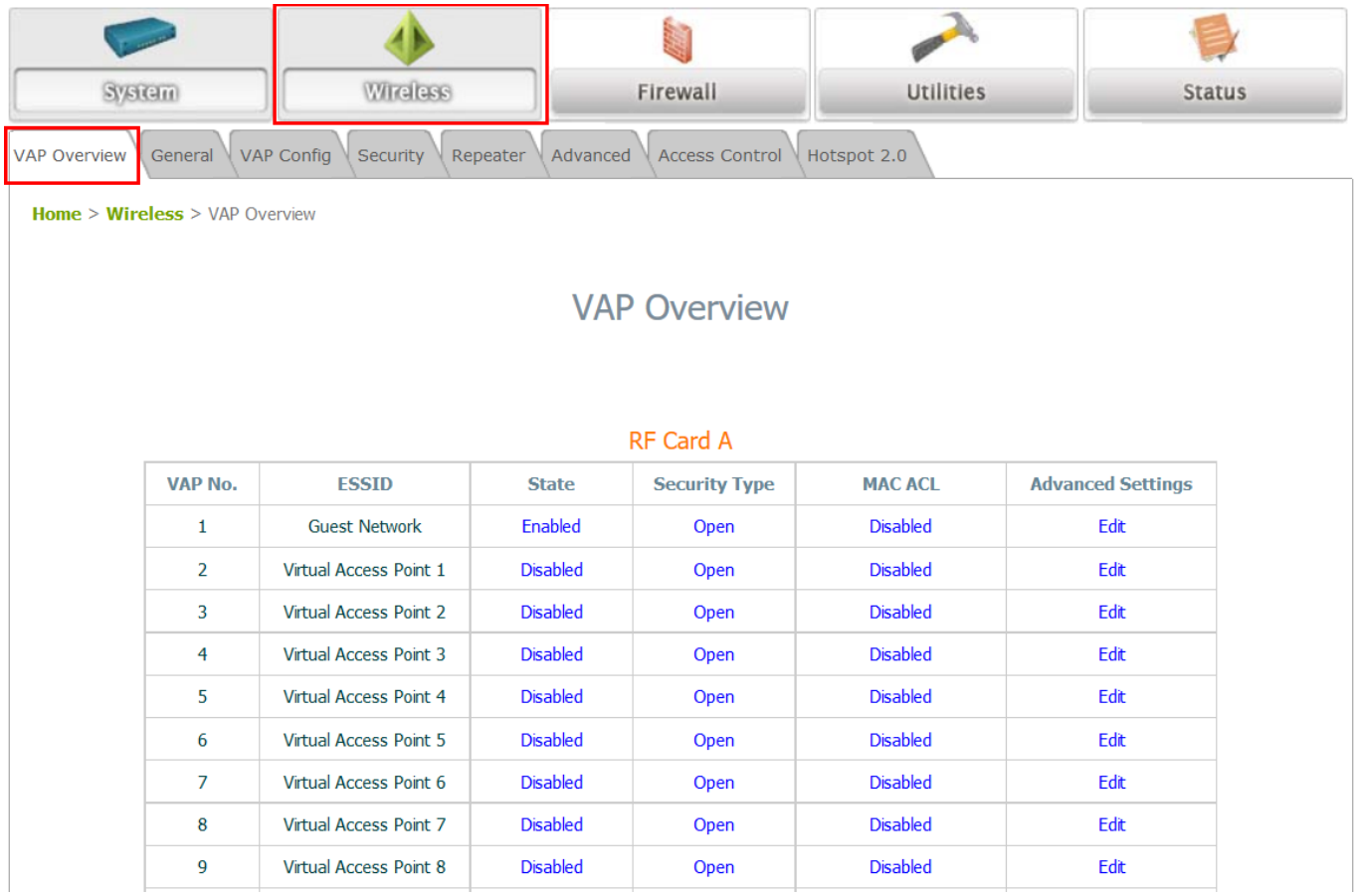


| VAP No. | ESSID | State | Security Type | MAC ACL | Advanced Settings |
|---|---|---|---|---|---|
| 1 | Guest Network | Enabled | Open | Disabled | Edit |
| 2 | Virtual Access Point 1 | Disabled | Open | Disabled | Edit |
| 3 | Virtual Access Point 2 | Disabled | Open | Disabled | Edit |
| 4 | Virtual Access Point 3 | Disabled | Open | Disabled | Edit |
| 5 | Virtual Access Point 4 | Disabled | Open | Disabled | Edit |
| 6 | Virtual Access Point 5 | Disabled | Open | Disabled | Edit |
| 7 | Virtual Access Point 6 | Disabled | Open | Disabled | Edit |
| 8 | Virtual Access Point 7 | Disabled | Open | Disabled | Edit |
| 9 | Virtual Access Point 8 | Disabled | Open | Disabled | Edit |

***Virtual AP Overview Page***

## Step 4. Configure WDS (Wireless Distribution System) Settings (Optional)

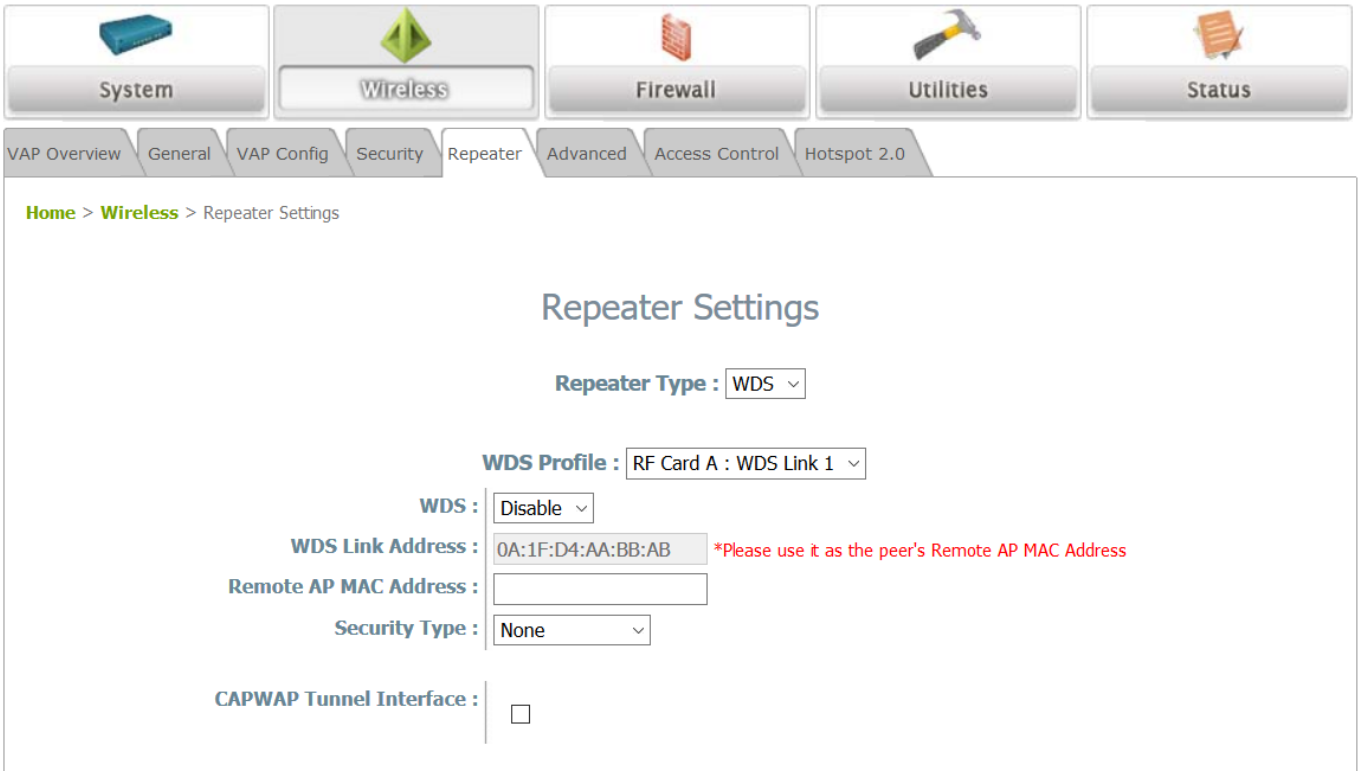


To extend the wireless coverage, ECW5210-L supports up to 8 WDS links per RF card for connecting wirelessly to other WDS-capable APs (peer APs). By default, all WDS profiles are disabled.

- Click on the **Wireless** button on the main menu.
- Select the **Repeater Settings** tab.
- Choose **WDS** as the **Repeater Type**.
- Choose the desired WDS profile:
  (a) Enable **WDS**.
  (b) Enter the **Remote AP MAC Address** (peer AP) and then Click **SAVE**.

If you are using another ECW5210-L as the peer AP, simply repeat the above-mentioned steps to configure another peer AP(s).

| | |
|---|---|
| **Note:** | On each and every configuration page, you may click ***SAVE*** to save the changes of your configured settings, but you must reboot the system for the changes to take effect. After clicking ***SAVE***, the following message will appear: **"Some modifications have been saved and will take effect after APPLY."** |

## Congratulations!

Now, Edgecore ECW5210-L is installed and configured successfully.

*After ECW5210-L's network configuration is completed, please remember to change the IP Address of your PC Connection Properties back to its original settings in order to ensure that your PC functions properly in its real network environments.*

- ***It is strongly recommended to make a backup copy of your configuration settings.***

P/N: V34220171018