Quick Start Guide

IEEE 802.11a/b/g/n/ac Enterprise Cloud Based Indoor Access Point

ECW7210-L

Note: For detailed access point (AP) installation information, refer to the *Installation Guide*, which is on the Documentation CD included with the AP.

Note: For Safety and Regulatory information, refer to the *Safety and Regulatory Information* document included with the AP.

Installation Information

The AP includes its own built-in features for mounting the unit to a wall or suspended ceiling T-rail.

Caution: The planning and installation of the AP requires professional personnel that are trained in the installation of radio transmitting equipment. The user is responsible for compliance with local regulations concerning items such as antenna power, use of lightning arrestors, grounding, and radio mast or tower construction. Therefore, it is recommended to consult a professional contractor knowledgeable in local radio regulations prior to equipment installation.

Follow these steps to install the AP:

1. Unpack the AP

Unpack the AP and check the package contents.

- ECW7210-L Enterprise Access Point
- AC Power adapter
- Console cable (RJ-45 to DB-9)
- Quick Start Guide (this guide)
- Regulatory and Safety Information
- Screw Kit

2. Mount the AP

After planning your installation, mount the unit on a wall or suspended ceiling T-rail.

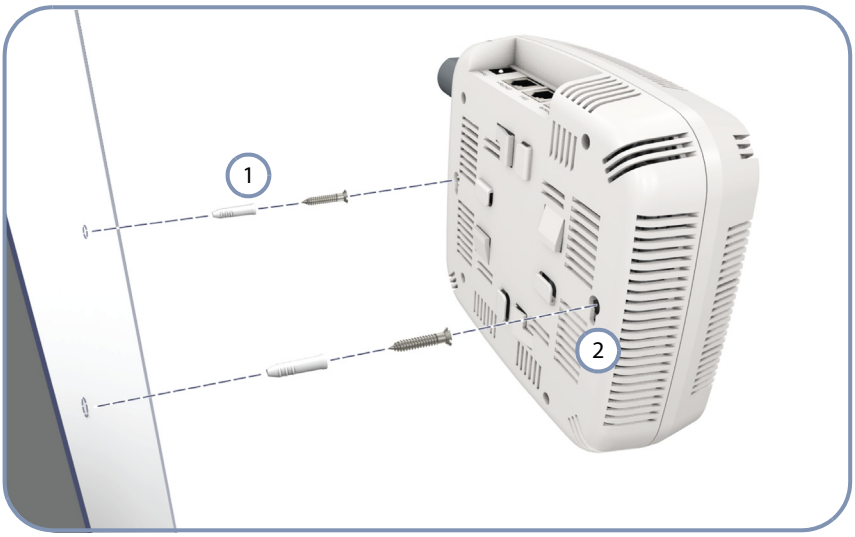

.Mounting on a Wall

1. Set two screws in the wall 137.2 mm (5.2 in.) apart.
2. Slide the AP's wall mounting slots down onto the screws so that the unit is secure.

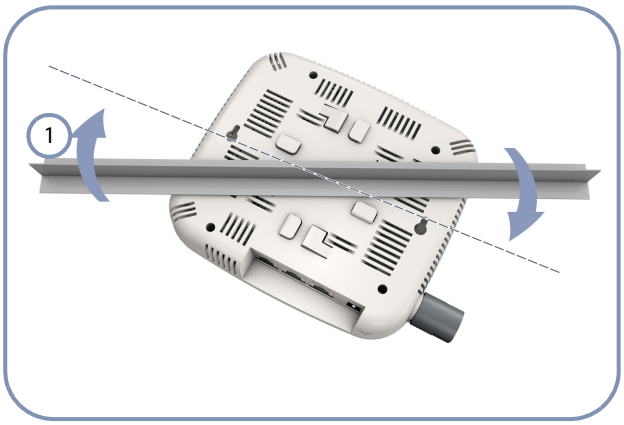

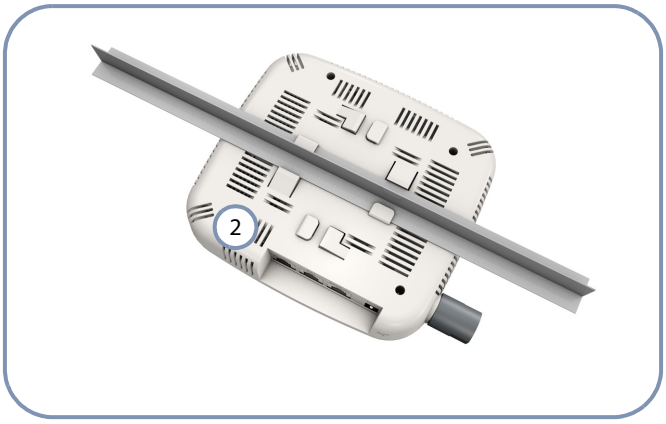

.Mounting on a Ceiling T-rail

1. Position the AP's ceiling-mount clip holders on either side of the T-rail.
2. Turn the AP until the two clips lock the AP to the T-rail.

3. Connect Cables

Connect network cable to the RJ-45 port for your network connection. The RJ-45 port connection can also provide PoE power to the unit.

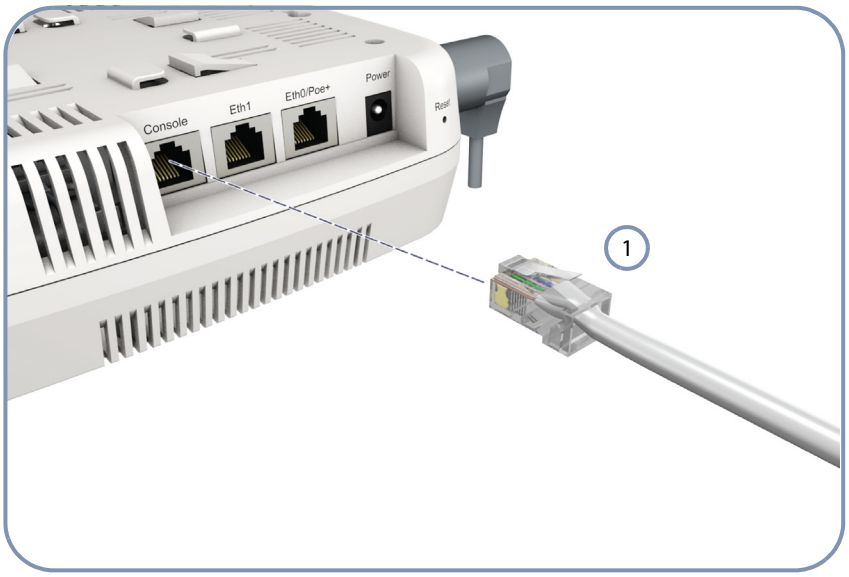

1 Connect Category 5e or better cable to the RJ-45 port.

4. Connect Power

If you do not power the unit using PoE, connect the AC power adapter to the AP and to an AC power source.

1 Connect the power adapter to the power socket.

2 Connect the power adapter to a nearby AC power source.

5. Verify AP Operation

Verify basic AP operation by checking the system LEDs.

The Power LED should be on green and the LAN LED on or flashing green.

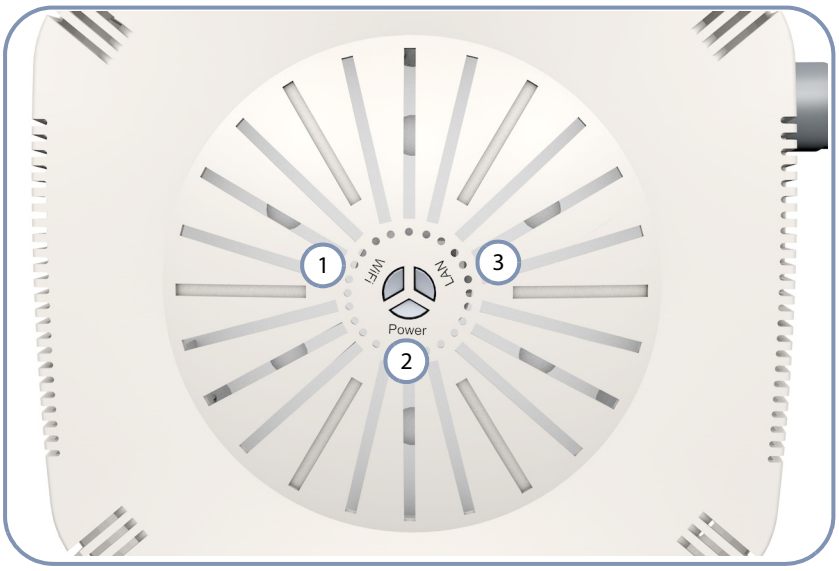

1 WiFi

2 Power

3 LAN

6. Connect to the Console Port

To make initial configuration changes to the AP, connect a PC to the AP's console port using the included console cable.

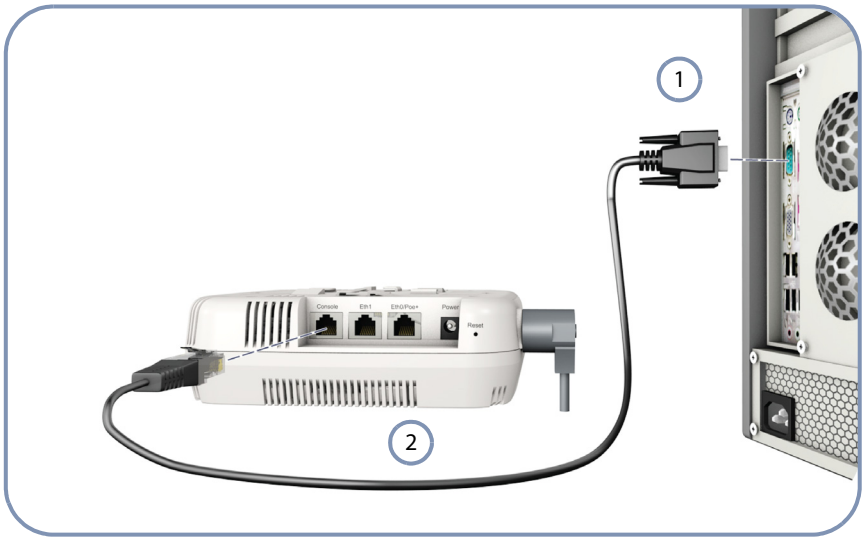

1. Console Port
2. Console Cable

From a PC running VT-100 terminal emulator software, use the following settings:

- Baud rate — 115,200 bps
- Character Size — 8 Characters
- Parity — None
- Stop bit — One
- Data bits — 8
- Flow control — none

Log in to the command-line interface (CLI) using default settings:

- Login Name — admin
- Password — *null* (there is no default password)

7. Connect to the Web User Interface

The AP offers a user-friendly web-based management interface for the configuration of all the unit's features.

You can make initial configuration changes by connecting a PC directly to the AP's LAN port. The AP has a default management IP address of 192.168.1.10 and a subnet mask of 255.255.255.0. You must set your PC IP address to be on the same subnet as the AP (that is, the PC and AP addresses must both start 192.168.1.x).

Log in to the web interface using the default settings:

- Login Name — admin
- Password — tallacnetworks

8. Security Slot The access point includes a Kensington security slot on the rear panel. You can prevent unauthorized removal of the access point by wrapping the Kensington security cable (not provided) around an unmovable object, inserting the lock into the slot, and turning the key.

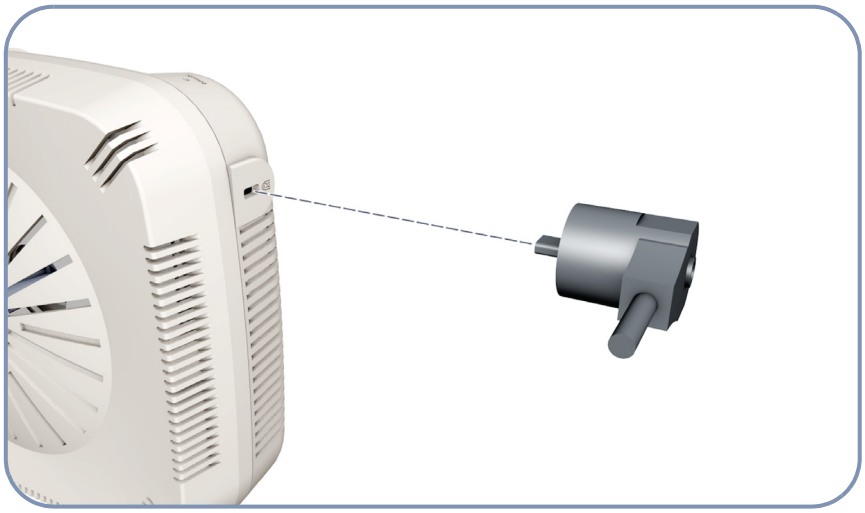

Hardware Specifications

Item	Specification
Chassis Specifications	
Size	W x D x H: 180 x 160 x 53 mm (7.08 x 6.29 x 2.08 inches)
Weight	638 g (1.40 lb)
Temperature	Operating: 0 °C to 40 °C (32 °F to 104 °F) Storage: -20 °C to 70 °C (-4 °F to 158 °F)
Humidity	Operating: 5% to 95% (non-condensing)
Network Interfaces	
Ports	Two RJ45 1000Base-T: One with PoE (PD)
2.4 GHz Radio	IEEE 802.11b/g/n
5 GHz Radio	IEEE 802.11a/n/ac
Radio Frequencies	
2.4 GHz	2400 ~ 2483.5 MHz
5 GHz	B1: 5150 ~ 5250 MHz B4: 5725 ~ 5850 MHz
Power Supply Specifications	
PoE Input Power	48 VDC, 0.6 A
AC Power Adapter	AC Input: 100 ~ 240 VAC, 50 ~ 60 Hz DC Output: 12 VDC, 2.5 A
Power Consumption	20 W maximum
Regulatory Compliances	
Radio	FCC Part 15C 15.247/15.207 (2.4-2.4835GHz, 5.725-5.850GHz) FCC Part 15E 15.407 (5.150GHz-5.250GHz)
Emissions	FCC Class B Part 15
Safety	UL 60950-1