User Manual

PRODUCT NAME : Single Band Wi-Fi + Ethernet Module

MODEL NAME : ETWFAFML01

The information contained herein is the exclusive property of LG Innotek and shall not be distributed, reproduced or disclosed in whole or no in part without prior written permission of LG Innotek.

LG Innotek

1. Features

ETWFAFML01 is the module for IEEE 802.11b/g/n wireless LAN.

ETWFAFML01 is based on ESP32-D0WDQ6 solution.

- IEEE 802.11 b/g/n single band WLAN infrastructure
- Size : 32mm x 28mm
- 802.11n, up to 150Mbps PHY rate
- CAN 2.0 interface
- Ethernet, 10 Mbps and 100 Mbps rates
- 4Gbyte eMMC Flash Memory
- Security : WFA, WPA, WPA2, WAPI
- Application : Home Appliance

2. Picture of Product

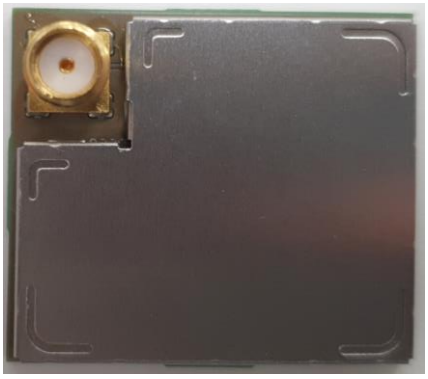

Module Top

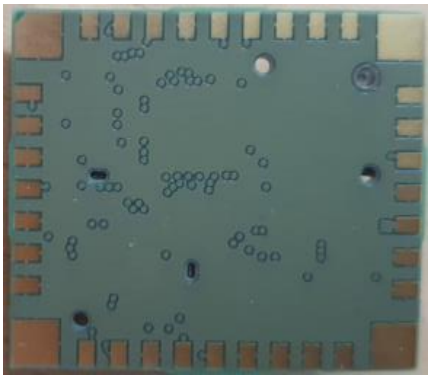

Module Bot

©2020 LGIT. All rights reserved.

3. Block Diagram

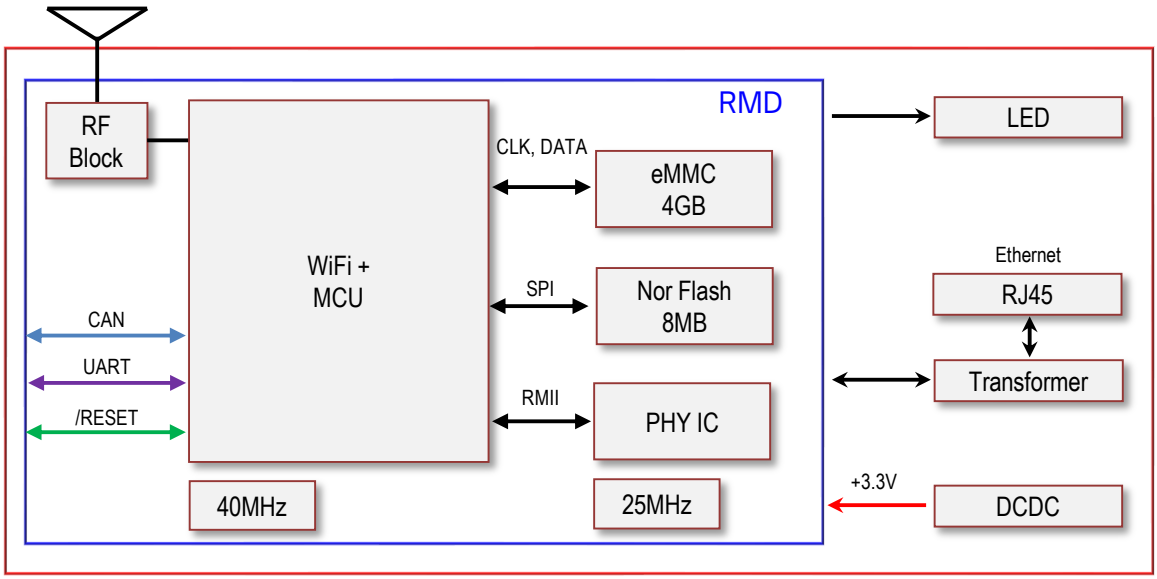

4. Absolute Maximum Ratings

Parameter	Min	Max	Unit
Storage Temperature	-40	+85	℃
Storage Humidity (@ 40℃)	-	90	%

Caution : The specifications above the Table define levels at which permanent damage to the device can occur. Function operation is not guaranteed under these conditions. Operating at absolute maximum conditions for extend periods can adversely affect the long-term reliability of the device.

- Other conditions
  1) Do not use or store modules in the corrosive atmosphere, especially where chloride gas, sulfide gas, acid, alkali, salt or the like are contained.
     Also, avoid exposure to moisture.
  2) Store the modules where the temperature
     and relative humidity do not exceed 5 to 40℃ and 20 to 60%.
  3) Assemble the modules within 6 months.
     Check the soldering ability in case of 6 months over.

©2020 LGIT. All rights reserved.

5. Operating Test Conditions

Parameter	Min	Typ	Max	Unit
Operating Temperature[1)]	-40	-	+85	℃
Operating Humidity (40℃)	-	-	85	%
Supply Voltage	3.15	3.3	3.45	Vdc

6. Standard Test Conditions

The Test for electrical specification shall be performed under the following condition Otherwise this following conditions, not guaranteed this performance.

6-1. Ambient condition

Temperature	25 ± 2℃
Humidity	65 ± 5%

6-2. Current consumption

Current Consumption	Min.	Typ.	Max.	Unit
Normal mode	-	200	600	mA

6-3. ESD Information

Human Body Model (HBM)	Min.	Max.	Unit
Contact	-	±1	kV

Note 1 : IEC 61000-4-2 (150pF, 330R)

©2020 LGIT. All rights reserved.

7. Pin Description

Connector	Pin No.	Pin Name	I/O	Pin Description
	2	NC		Debug
	3	NC		Debug
	5	CAN_TX		CAN TX
	6	CAN_RX		CAN RX
	12	RESET		RESET
	14	VDD		3.3V Power Supply
	21	RX_M		Ethernet RX -
	22	RX_P		Ethernet RX +
	24	TX_M		Ethernet TX -
	25	TX_P		Ethernet TX +
	29	NC		Boot mode
	32	LED		System Indicator
	#	GND		Ground

< Top View >

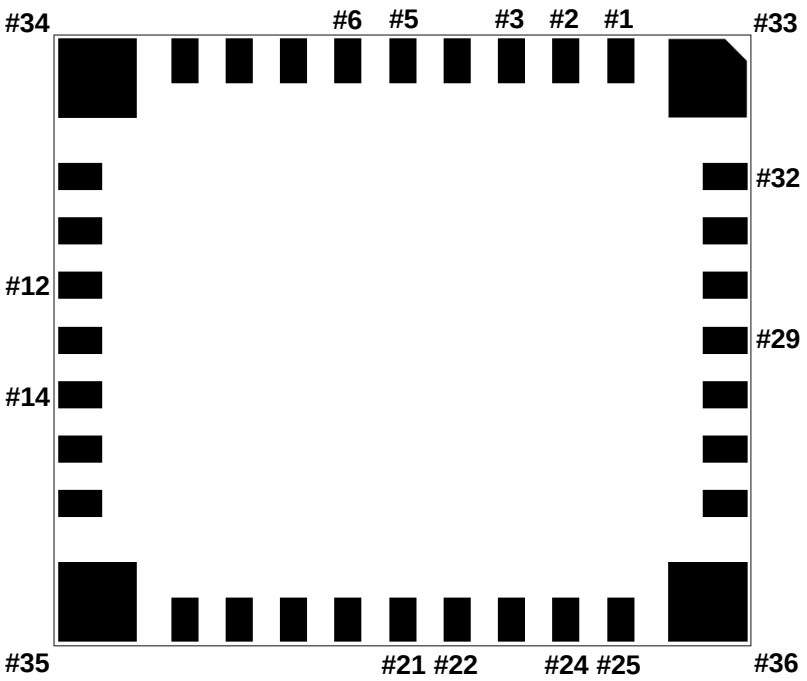

©2020 LGIT. All rights reserved.

8. Outline Drawing

Note : PCB : FR-4, CTI-600, 1.6T

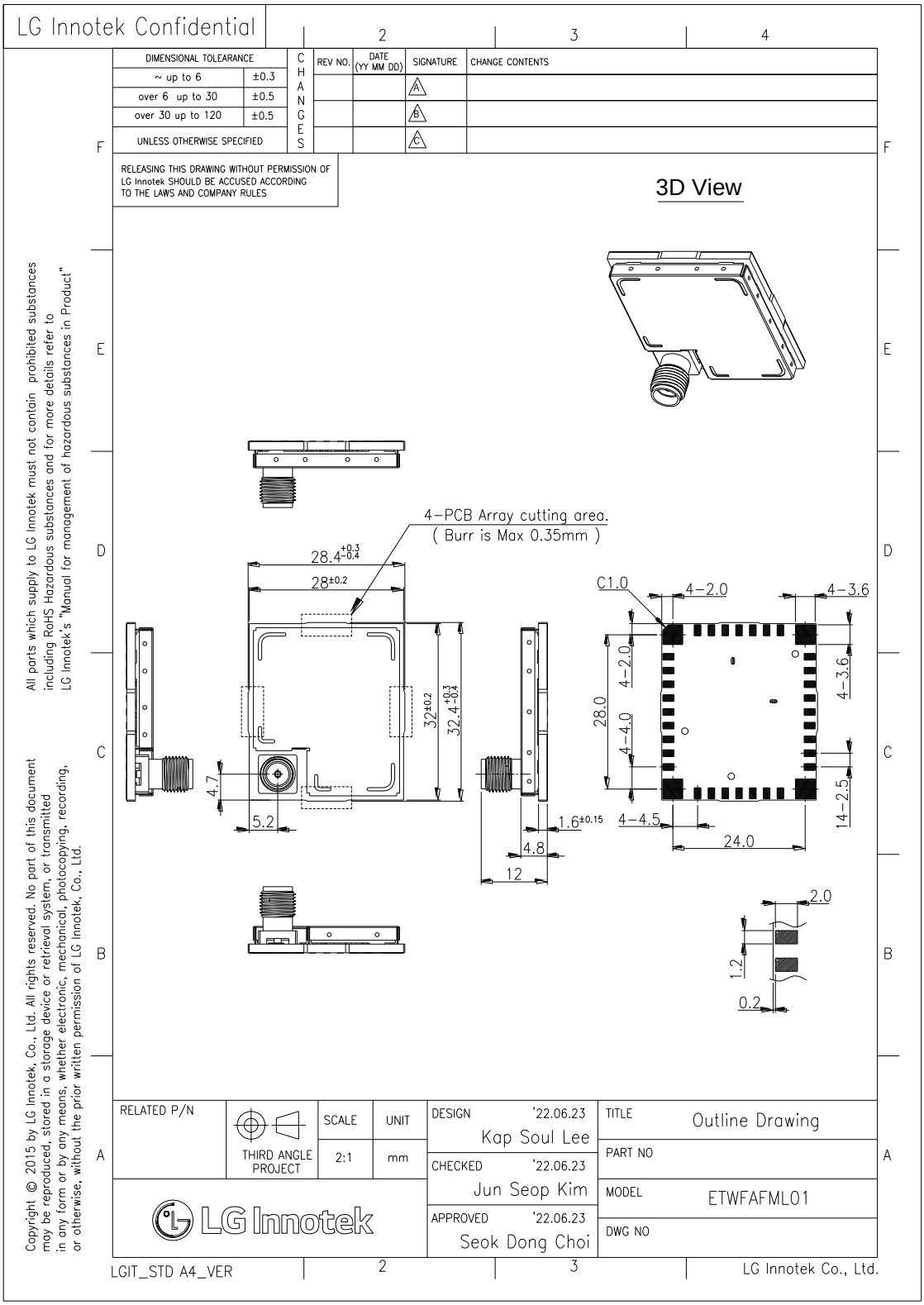

©2020 LGIT. All rights reserved.

9. Packing Information

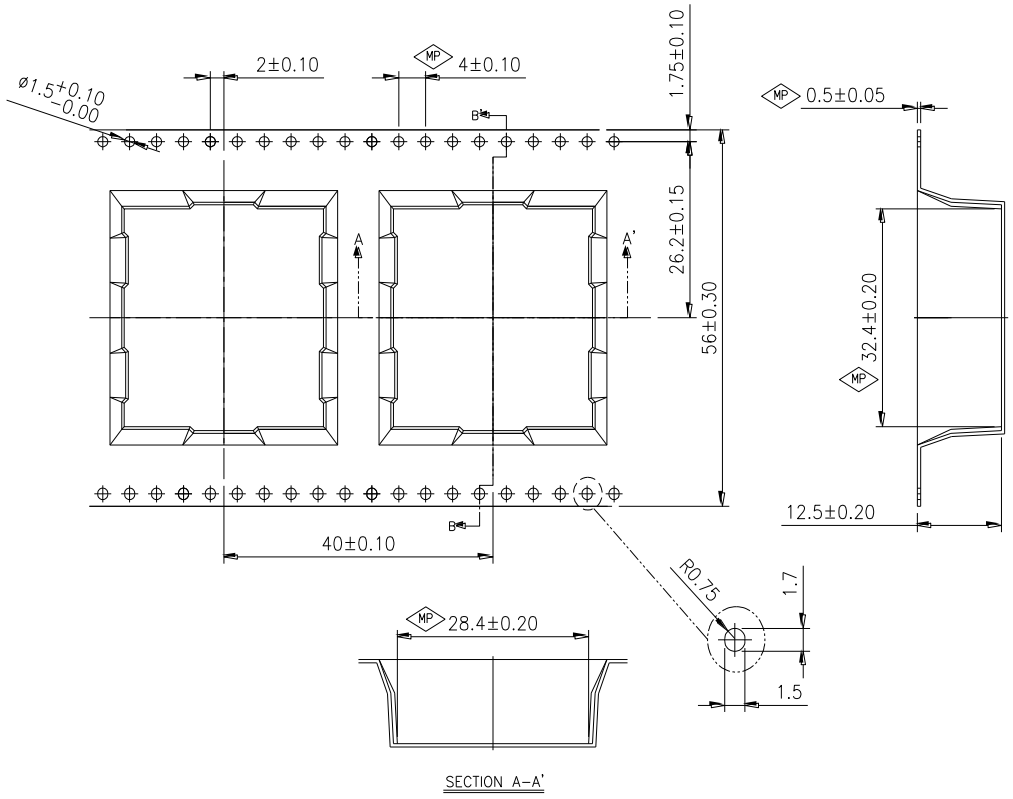

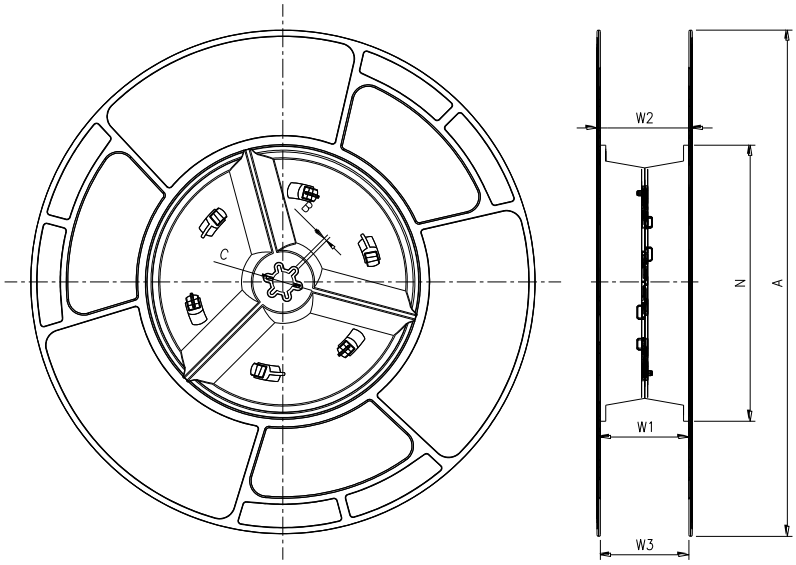

Size	56mm
A	330.0 $^{+2.0}_{-2.0}$
B	2.0 $^{+1.0}_{-1.0}$
C	13.0 $^{+0.5}_{-0.2}$
N	180 $^{+2.0}_{-2.0}$
W1	56.4 $^{+2.0}_{-0.0}$
W2	60.4 $^{+2.0}_{-2.0}$
W3	58.4 $^{+5.0}_{-2.0}$
Surface Resistance	$10^4 \sim 10^9$

©2020 LGIT. All rights reserved.

10. Tune-up Power

*Max Average conducted power is listed.

Tolerance: -3 ~ +3

Mode	Channel	Power	Duty	Measured Power(dBm) [Power + Duty]	Attenuation Setting	Target Power (dBm)
802.11b	1	17.02	0.00	17.02	4	16
	6	16.91		16.91		
	11	17.01		17.01		
802.11g	1	14.65	0.00	14.65	4	14
	6	15.91		15.91	1	14
	10	14.85		14.85	4	14
	11	13.65		13.65	6	13
802.11n(20M)	1	13.52	0.00	13.52	6	12
	6	15.73		15.73	1	13
	10	14.65		14.65	4	13
	11	13.59		13.59	6	12
802.11n(40M)	3	11.69	0.00	11.69	9	11
	4	12.90		12.90	6	11
	5	14.32		14.32	3	12
	6	15.21		15.21	1	13
	7	14.75		14.75	2	12
	8	13.69		13.69	5	12
	9	13.02		13.02	6	11

©2020 LGIT. All rights reserved.

11. Notice of precautions

Manufacture: LG Innotek

Product Name: RF Module

Model: ETWFAFML01

Operating Voltage: 3.3V DC

Postal address: 26, Hanamsandan 5beon-ro, Gwangsan-gu, Gwangju, 506-731, South Korea

Communications Regulations

The following is a list of communications regulations apply to the ETWFAFML01.

Manufacturer name: LG Innotek

United States Compliance

FCC

FCC Part 15.19 statement

FCC ID: YZP-ETWFAFML01

This device complies with part 15 of the FCC Rules. Operation is subject to the following two conditions: (1) this device may not cause harmful interference, and (2) this device must accept any interference received, including interference that may cause undesired operation.

FCC Part 15.105 statement (Class B)

This equipment has been tested and found to comply with the limits for a Class B digital device, pursuant to part 15 of the FCC Rules.

These limits are designed to provide reasonable protection against harmful interference in a residential installation. This equipment generates, uses and can radiate radio frequency energy and, if not installed and used in accordance with the instructions, may cause harmful interference to radio communications.

©2020 LGIT. All rights reserved.

However, there is no guarantee that interference will not occur in a particular installation. If this equipment does cause harmful interference to radio or television reception, which can be determined by turning the equipment off and on, the user is encouraged to try to correct the interference by one or more of the following measures:

- Reorient or relocate the receiving antenna.
- Increase the separation between the equipment and receiver.
- Connect the equipment into an outlet on a circuit different from that to which the receiver is connected.
- Consult the dealer or an experienced radio/TV technician for help.

FCC Part 15.21 statement

Any changes or modifications not expressly approved by the party responsible for compliance could void the user's authority to operate this equipment.
This device must not be co-located or operating in conjunction with any other antenna or transmitter

RF Exposure

The antenna (or antennas) must be installed so as to maintain at all times a distance minimum of at least 20 cm between the radiation source (antenna) and any individual. This device may not be installed or used in conjunction with any other antenna or transmitter.

Responsible Party – U.S. Contact Information

LG Innotek USA Inc.

2540 N 1stST STE 400 SAN JOSE, CA 95131-1016, USA

TEL. 1-408-890-0844 / cku@lginnotek.com

*As ETWFAFML01 is a limited module, it can only use in the host which supply 3.3 V DC Power.

©2020 LGIT. All rights reserved.

Canada Compliance

ISED

IC: 7414C-ETWFAFML01

This device contains license-exempt transmitter(s)/receiver(s) that comply with Innovation, Science and Economic Development Canada's license-exempt RSS(s). Operation is subject to the following two conditions:

1. This device may not cause interference.
2. This device must accept any interference, including interference that may cause undesired operation of the device.

L'émetteur/récepteur exempt de license contenu dans le présent appareil est conforme aux CNR d'Innovation, Sciences et Développement économique Canada applicables aux appareils radio exempts de license. L'exploitation est autorisée aux deux conditions suivantes :

1. L'appareil ne doit pas produire de brouillage;
2. L'appareil doit accepter tout brouillage radioélectrique subi, même si le brouillage est susceptible d'en compromettre le fonctionnement.

RF Exposure

The antenna (or antennas) must be installed so as to maintain at all times a distance minimum of at least 20 cm between the radiation source (antenna) and any individual. This device may not be installed or used in conjunction with any other antenna or transmitter.

l'exposition aux RF

L'antenne (ou les antennes) doit tre installe de faon maintenir tout instant une distance minimum de au moins 20 cm entre la source de radiation (l'antenne) et toute personne physique.

Caution

Any changes or modifications to this device not explicitly approved by manufacturer could void your authority to operate this equipment.

Les changements ou modifications de cet appareil non expressment approuv par le fabricant peuvent annuler votre droit à utiliser cet équipement.

©2020 LGIT. All rights reserved.

Regulatory notice to host manufacturer according to KDB 996369 D03 OEM Manual v01>

List of applicable FCC rules

This module has been granted modular approval as below listed FCC rule parts.
-FCC Rule parts 15C(15.247)

Summarize the specific operational use conditions

-The OEM integrator should use equivalent antennas which is the same type and equal or less gain then an antenna listed in 2.7 in this instruction manual.

RF exposure considerations

The module has been certified for integration into products only by OEM integrators under the following condition:
-The antenna(s) must be installed such that a minimum separation distance of at least 20 cm is maintained between the radiator (antenna) and all persons at all times.
-The transmitter module must not be co-located or operating in conjunction with any other antenna or transmitter except in accordance with FCC multi-transmitter product procedures.

-Mobile use

As long as the three conditions above are met, further transmitter testing will not be required.
OEM integrators should provide the minimum separation distance to end users in their end-product manuals.

Antennas list

This module is certified with the following integrated antenna.
-Type: PCB Antenna
-Max. peak Antenna gain

Frequency Band	Peak Gain
2.4GHz (2412-2462)	1.5 dBi

Any new antenna type, higher gain than listed antenna should be met the requirements of FCC rule 15.203 and 2.1043 as permissive change procedure.

©2020 LGIT. All rights reserved.

Label and compliance information
End Product Labeling
The module is labeled with its own FCC ID and IC Certification Number. If the FCC ID and IC Certification Number are not visible when the module is installed inside another device, then the outside of the device into which the module is installed must also display a label referring to the enclosed module. In that case, the final end product must be labeled in a visible area with the following:
“Contains FCC ID: YZP-ETWFAFML01"
“Contains IC: 7414C-ETWFAFML01”

Information on test modes and additional testing requirements
-OEM integrator is still responsible for testing their end-product for any additional compliance requirements required with this module installed (for example, digital device emissions, PC peripheral requirements, additional transmitter in the host, etc.).

Additional testing, Part 15 Subpart B disclaimer
-The final host product also requires Part 15 subpart B compliance testing with the modular transmitter installed to be properly authorized for operation as a Part 15 digital device.

2. ISED
RSS-GEN, Sec. 7.1.3–(licence-exempt radio apparatus)
This device complies with Industry Canada licence-exempt RSS standard(s). Operation is subject to the following two conditions:
(1) this device may not cause interference, and
(2) this device must accept any interference, including interference that may cause undesired operation of the device.

Le présent appareil est conforme aux CNR d’Industrie Canada applicables aux appareils radio exempts de licence. L’exploitation est autorisée aux deux conditions suivantes :
(1) l’appareil ne doit pas produire de brouillage, et
(2) l’utilisateur de l’appareil doit accepter tout brouillage radioélectrique subi, même si le brouillage est susceptible d’en compromettre le fonctionnement.

©2020 LGIT. All rights reserved.

RF Exposure
The antenna (or antennas) must be installed so as to maintain at all times a distance minimum of at least **20 cm** between the radiation source (antenna) and any individual. This device may not be installed or used in conjunction with any other antenna or transmitter.

l'exposition aux RF
L'antenne (ou les antennes) doit être installée de façon à maintenir à tout instant une distance minimum de au moins **20 cm** entre la source de radiation (l'antenne) et toute personne physique.

Caution: Any changes or modifications to this device not explicitly approved by manufacturer could void your authority to operate this equipment. Attention:
Les changements ou modifications de cet appareil non expressément approuvé par le fabricant peuvent annuler votre droit à utiliser cet équipement.

Étiquetage du produit final (IC)
Le module ETWFAFML01 est étiqueté avec sa propre identification FCC et son propre numéro de certification IC. Si l'identification FCC et le numéro de certification IC ne sont pas visibles lorsque le module est installé à l'intérieur d'un autre dispositif, la partie externe du dispositif dans lequel le module est installé devra également présenter une étiquette faisant référence au module inclus. Dans ce cas, le produit final devra être étiqueté sur une zone visible avec les informations suivantes :
« Contient module émetteur identification FCC ID: YZP-ETWFAFML01
« Contient module émetteur IC : 7414C-ETWFAFML01»

©2020 LGIT. All rights reserved.