USER'S MANUAL

P9640B

BLUETOOTH® DVD/MP3 AM/FM RECEIVER
6.2" (157MM) WIDESCREEN TOUCHSCREEN
DIGITAL TFT LED MONITOR

Planet Audio

To ensure safety while driving

and to comply with laws,

drivers should not watch video or

operate the video device while driving.

Congratulations on your purchase of a Planet Audio Multimedia Receiver. It has been designed, engineered and manufactured to bring you the highest level of performance and quality, and will offer you years of entertainment pleasure.

Content

Accessories 02

Unit Installation 03

Wire Connection 03

Parking Brake Connection 04

Speaker connection 05

Button Description 06

Remote Control 07

Main Menu 10

Radio Operation 10

DVD Operation 11

USB /SD Operation 12

Settings Operation 13

Bluetooth Operation 16

Aux-In Operation 18

Notes of Disc 19

Troubleshooting 20

General Specification 22

Accessories

Package contains the following accessories for installation and operation of the unit.

(1) Washer, Spring (2) Washer, M5 Nut	1		(5) Rubber Cushion	1		
(3) Screw	1		(6) Screw	8		
(4) Bolt	1		(7)installation bracket	1	Left	
				1	Right	
(5) Mounting Strap	1					

BT MIC Cable

Remote Control

Power Cable

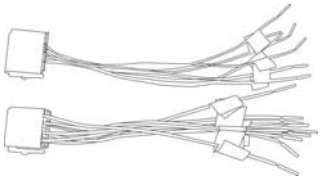

Trim Ring

User Manual

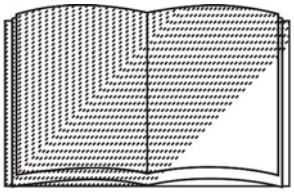

Unit Installation

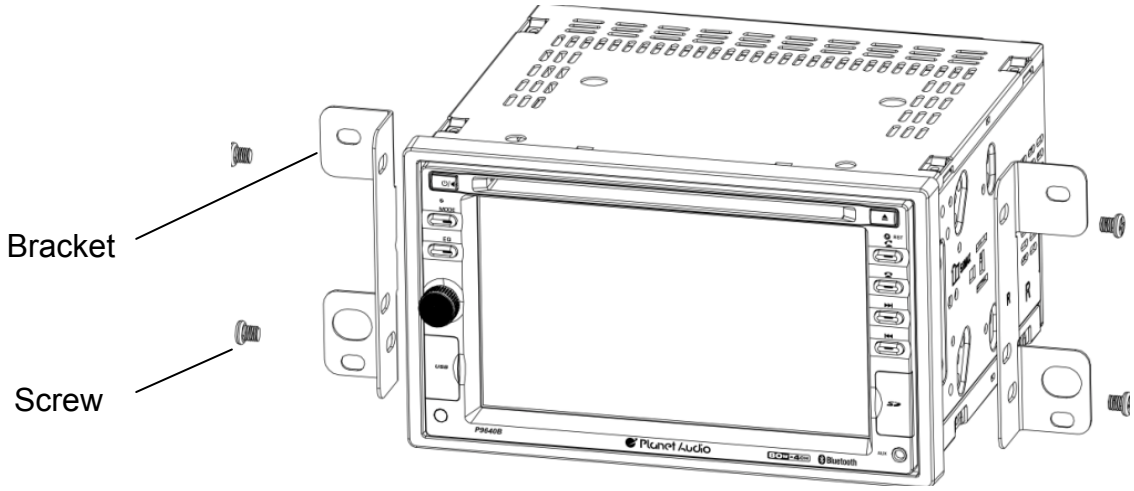

1. Put the 2 brackets to the left and right side of the unit;
2. Use screws to fix the brackets to the unit.

Wire Connection

The Description of the Input/output Interface of the Rear Chassis

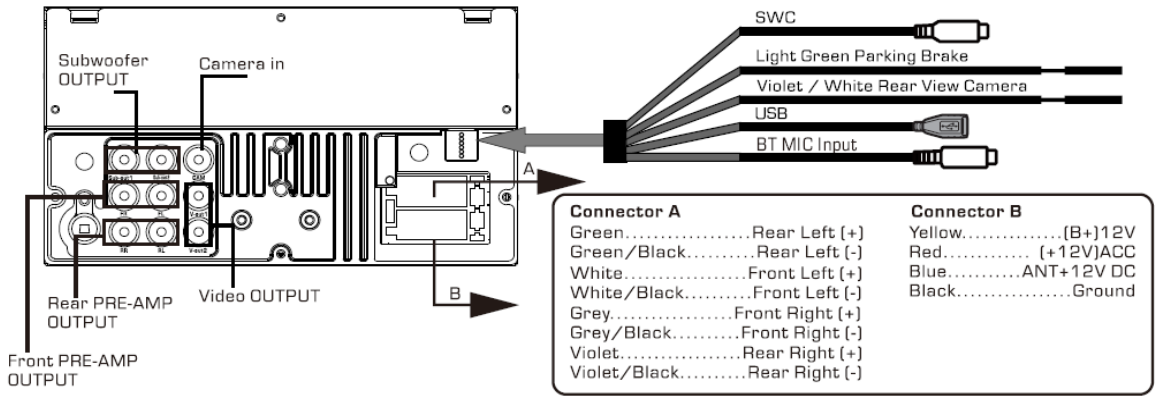

Parking Brake Connection

In order to view videos, the parking brake wire must be connected, and the vehicle stopped

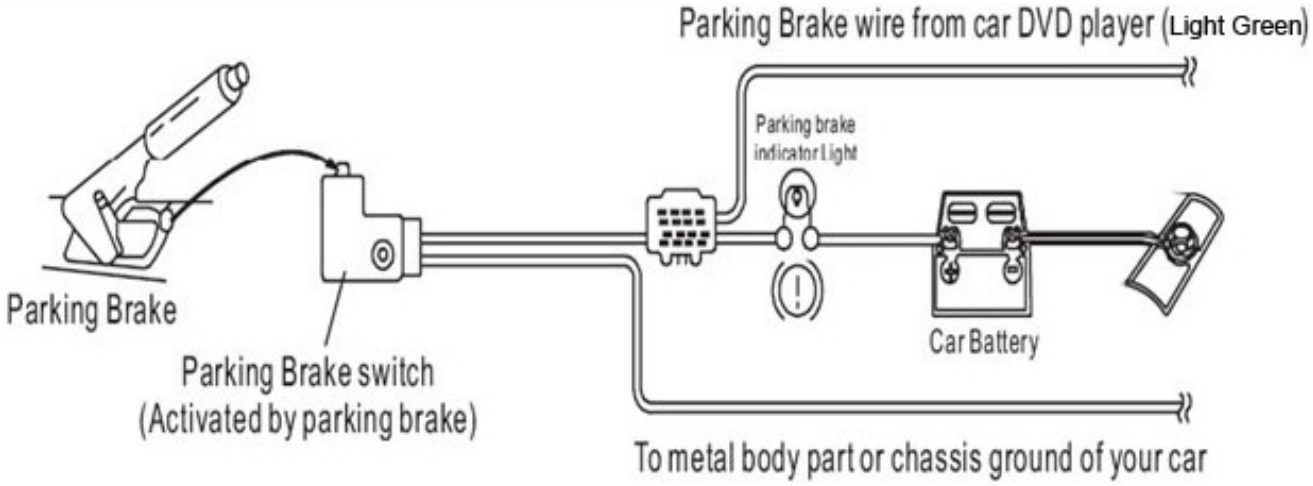

Connecting the reversing line to taillight on the car

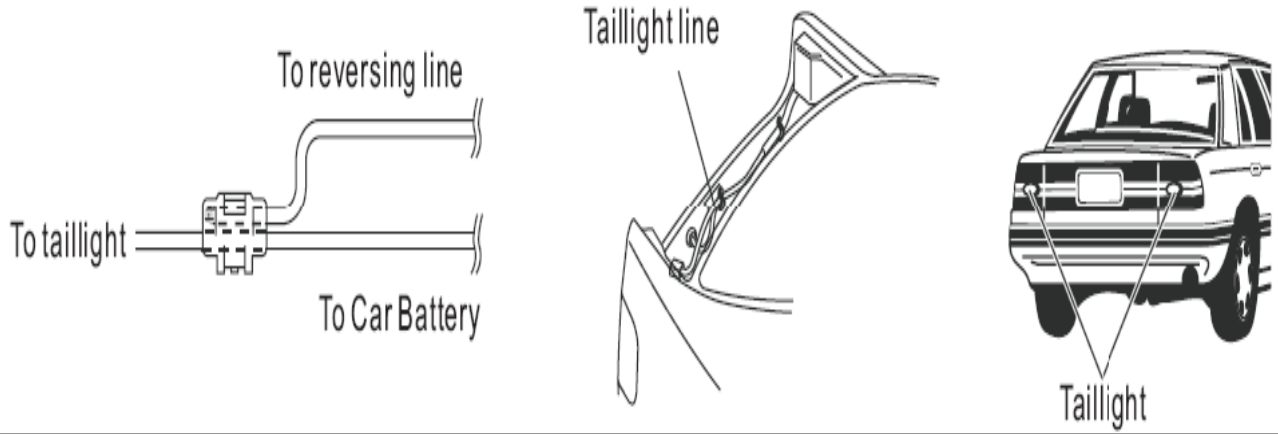

Speaker Connection

Connect the speakers according the following diagram, incorrect connections may damage the unit and/ or your speakers. Do not chassis ground speakers. Always observe correct polarity.

Correct connection

Left front - Right front | Left rear - Right rear

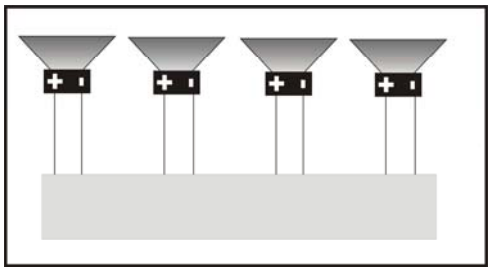

Incorrect connections

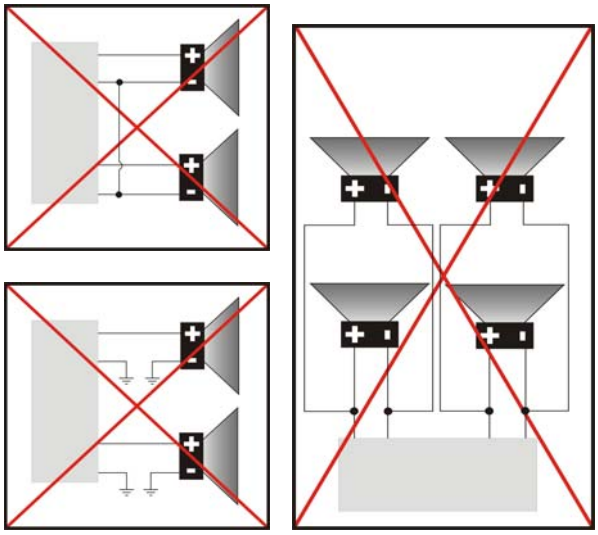

Button Description

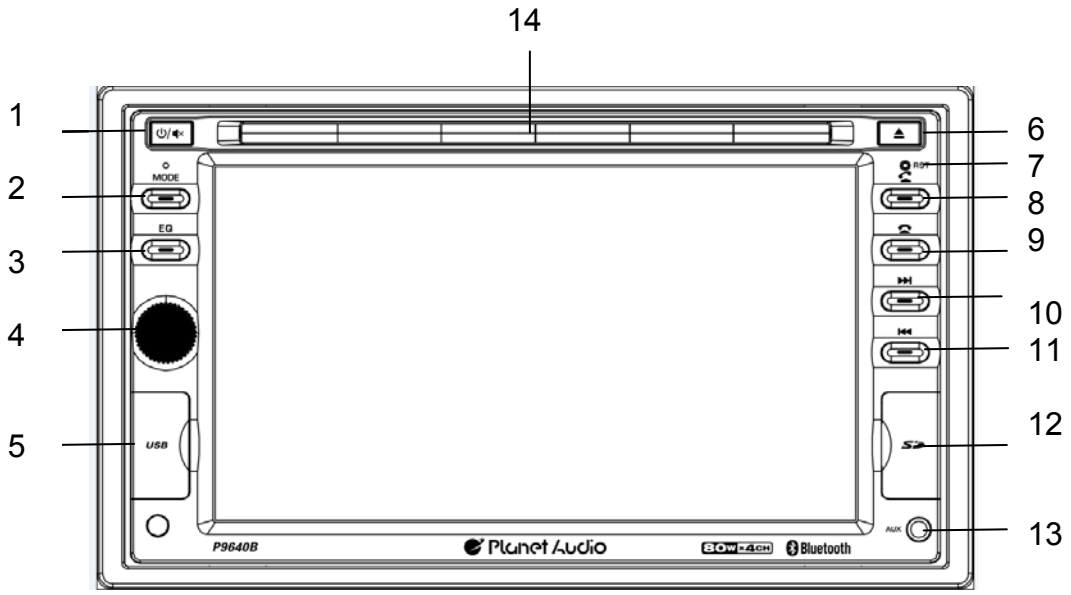

1.Open button
Press the button for short moment to turn on power,and long press it to turn off power.
Press the button for short moment can Open or close the mute.

2. Mode Button
When the unit is power on ,repeat press this button can switch to different function mode as follow picture.

3.EQ Button
Press the button can quickly enter or exit EQ.

4 .Rotate Button
Rotate VOL knob to increase or decrease volume level.
Press the button to get into the last mode ,press it again will back to the main menu .

5. USB slot
Insert a USB into this slot and the unit will automatically start reading and playback.

6. EJECT Button
Press to eject a disc. If the disc is not removed for about 10 seconds after eject, the disc is reinserted automatically.

7. RESET Button
Press it with a thin, sharp object. The device will then be reset to factory default settings.

8. Dial button
In Bluetooth mode, press to make a call after inputted a phone number or accept an incoming call.

9. HANG UP button
In Bluetooth mode, press to reject a coming call or hang up while calling.

10. Forward button
press the button to skip to the next track

11.Back button
press the button to skip to the previous track.

12. SD slot
Insert a SD card into this slot and the unit will automatically start reading and playback.

13.AUX
Put the Aux plug into the Aux-In jack which was marked on front panel.

14. DISC Slot
The place for put into the disc.

Remote Control

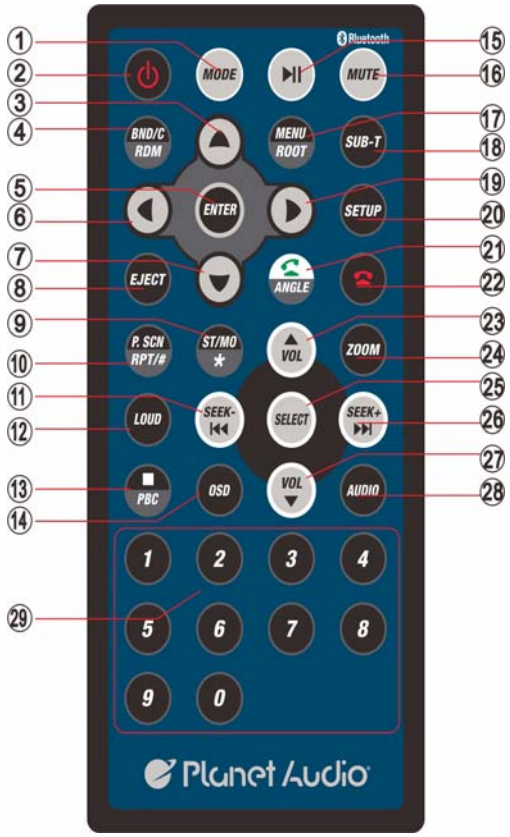

1: MODE
2: POWER
3: UP
4: BAND/RANDOM/CLEAR
5: ENTER
6: LEFT
7: DOWN
8: EJECT
9: STEREO/MONO/*
10:P.SCAN/REPEAT/#
11: SEEK-/BACKWARD
12: LOUD
13: STOP/PBC
14: OSD
15: PLAY/PAUSE
16: MUTE/BLUETOOTH
17: MENU/ROOT
18: SUBTITLE
19: RIGHT
20: SETUP
21: DIAL/ANGLE
22: HANG UP
23: VOLUME UP
24: ZOOM
25: SELECT
26: SEEK+/FORWARD
27: VOLUME DOWN
28: AUDIO
29: NUMERIC KEY

1. MODE button

Press it to select the mode: radio, disc (if there is a disc in unit), USB (if there is a USB device in the unit), SD (if there is a SD/MMC card in the unit), Bluetooth, Aux-In

2. POWER button

Power on or power off.

3. UP button

Press it to move the cursor up.

4. BAND/RDM/CLEAR button

In radio mode, press to change radio band in sequence of FM1 → FM2 → FM3 → AM1 → AM2; In DVD mode, press to play randomly; In Bluetooth mode, short press it to clear the single phone number; long press it to clear all the phone number.

5: ENTER

Press it to confirm your selection.

6. LEFT button

Press it to move the cursor left.

7. DOWN button

Press it to move the cursor d.

8. EJECT button

Press it to eject the disc.

9. STEREO/MONO/* button

Press to switch the radio in stereo and mono sound. In bluetooth mode, press it to make a symbol.

10. P.SCN/ RPT / # button

In DVD mode, press to repeat REP 1 => REP Title => REP ALL.

In SD /USB mode， press to repeat REP 1 => REP Dir => REP ALL.

In radio mode, PS (preset scan): Press to scan all preset stations in the memory of the current band and stay on each memory stations for about 5 seconds.

AS (Auto Save), long press to save the stations with good reception automatically.

In bluetooth mode, press it to make a # symbol.

11. ⏮ / SEEK- button

In DVD mode, press ⏮ button to skip to the previous track, press and hold ⏮ button for two seconds to activate fast reverse (REW) search in a track.

In radio mode, press and hold ⏮ button to select station backward automatically, touch again will stop select station. ⏮ button frequency down.

12. LOUD

Press to select loudness on or off.

13. STOP/PBC button

Press to stop playback from the current position, press again to final stop from the beginning. Press play/pause button to play.

14. OSD button

In DVD mode press to show disc playing information.

15. PLAY/PAUSE button

In DVD/USB/SD mode, press it to break playback, press again to resume playback.

16. Mute button/Bluetooth button

🔇 : Short press to mute the volume output, press again to resume volume.

Long press this button to enter into Bluetooth mode (Hands free).

17. MENU/ROOT button

Press it to show main menu, in DVD mode, long press it to enter title menu (Available only if the DVD disc with title menu).

18. SUBTITLE button

Press it to select the subtitle language (Available only if the disc with subtitle function).

19. RIGHT button

Press it to move cursor right.

20. SETUP button

In DVD mode press it to enter the setup menu, press again to resume playback.

21. Dial button/ANGLE Button

In DVD mode, press it repeatedly to change the viewing angle (Available only with a recorded DVD file or DVD disc has this function).

In Bluetooth mode, press to make a call after inputted a phone number or accept an incoming call.

22. HANG UP button

In Bluetooth mode, press to reject a coming call or hang up while calling.

23. VOLUME UP button

Press to increase volume level.

24. ZOOM button

In DVD mode Press to zoom the image in or out in the sequence of zoom 2-> zoom 3-> zoom4-> zoom 5-> zoom 1/2-> zoom 1/3-> zoom 1/4-> zoom off.

25. SELECT button

Press it to enter the EQ setting menu, and press cursor up/down button to choose an item and press cursor left/right buttons to set the item, press select button again to exit the menu.

26. ⏭ / SEEK + buttons

In DVD mode, press ⏭ button to skip to the next track, press and hold ⏭ button for two seconds to activate fast forward (FF) search in a track.

In radio mode, press and hold ⏭ button to select station forward automatically, touch again will stop select station. ⏭ button frequency up.

27. VOLUME DOWN button

Press to decrease volume level.

28. AUDIO

In DVD mode press it to select the audio language.

29. NUMERIC KEY

In radio mode, select 1-6 the desired band; In DVD mode, select track.
In Bluetooth mode, press to input phone number，long press 0 number to make a + symbol.

Note:

- The distance may vary according to the brightness of ambient light.
- If the remote is not used for an extended period of time, remove the battery to prevent possible damage from battery leakage and corrosion.
- Do not place any objects between the remote control unit and the sensor on the unit.
- Do not drop the remote control onto the floor; it will damage it beyond repair.
- Do not use the remote control unit, while simultaneously operating the remote control unit of any other equipment; they may interfere resulting in improper operation.
- The battery normally last for about one year although depending how often the remote control is used. If the remote control unit isn't working even when it is operated near the unit, replace the battery with a new battery of the same make and use only a lithium cell battery type: CR2025 (3V).
- Dispose empty batteries in accordance with your local governmental regulations.
- Do not short-circuit, disassemble, heat or dispose of fire or flames the battery.
- Keep the battery out of reach of children, should the battery be swallowed, immediately consult a doctor.

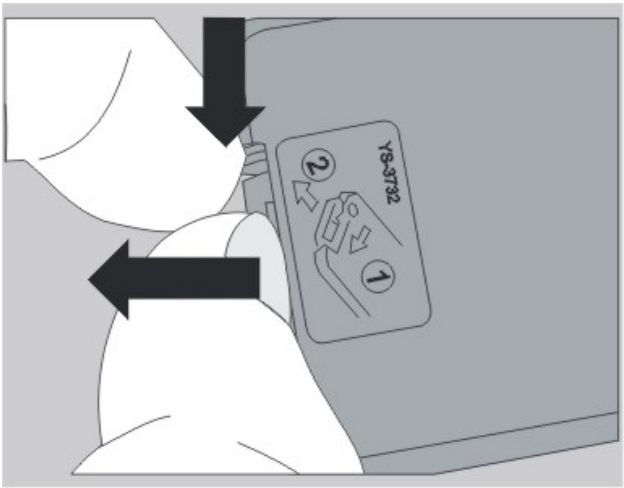

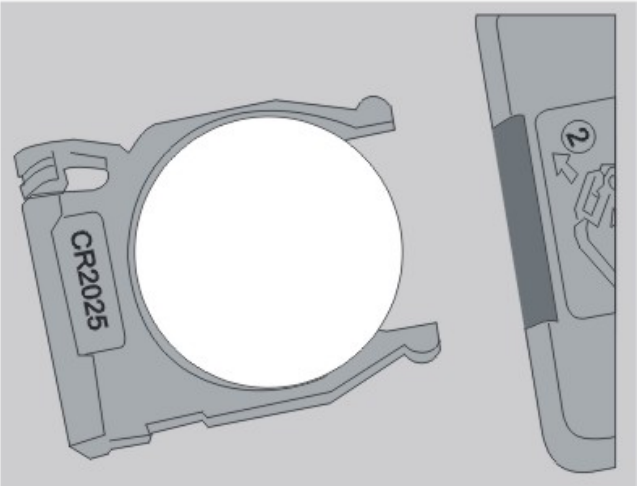

Main Menu

The best way to discover the program is to explore each screen in detail, and to find out how to move from one to another. Read this chapter for a guided tour.
Unit starts by displaying the main menu.
This is the root of the screen hierarchy, and you can simply access all features by tapping on the touch screen buttons.
Tap the icons to enter a desired mode. Slip the screen left and right to switch between the 2 menu pages.

Page 1

Page 2

Radio Operation

To start radio, tap radio button on main menu screen.

Touch it to select station backward manually, touch and hold this icon to select station backward automatically.

Touch it to select station forward manually, touch and hold this icon to select station. forward automatically.

Touch it to select FM1—>FM2—>FM3.

Tou ch it to select AM1—>AM2.

Touch it to select station forward automatically. Touch again will stop select station.

Touch it to select station backward automatically. Touch again will stop select station.

Touch this button can turn on or turn off Local function.

Touch this button to select mono sound reception.

Touch this button can scan the stations from 1-6, Long Touch it to save the stations with good reception automatically and scan each station for about 5 seconds.

Touch this button go to setting mode.

. Radio Operation

Touch this button to adjust the brightness of TFT panel
.
Touch this button to return to main menu

Touch button go to EQ setting
TA Touch this button to switch radio traffic service on or off.

PTY Touch this button to select program type.

Shortcut to the rear camera mode.

Shortcut to bluetooth mode.

DVD Operation

DVD Player

To start DVD player, tap on DVD button from main menu screen.

Touch Screen Menu

You will not see any buttons while DVD is played, buttons will appear when you tap on TFT screen. Tap the screen again to hide the buttons, slide the subtitle part of bottom screen to switch the following 2 pages.

Note:

1. DVD player will automatically start playing when you insert the DVD disc.
2. Suggest that don't watch video if the vehicle is moving for driver's safety.
3. DVD Player will not only play video, but picture and music files as well.

Touch it to enter to previous/next page menu.

Touch it skip to the previous track

Touch it skip to the next track

Touch it to pause/play

Touch it to select the sound track in the sequence of mono L => mono R =>auto L => auto R =>stereo

Touch it choose brightness

Zoom the image in or out in the sequence of ×2×3×4×5×1/2× 1/3 ×1/4

In DVD mode, touches it chooses Repeat 1=>repeat title =>repeat all. In VCD mode, touch it can choose REP 1 => REP DIR => REP ALL

DVD Operation

Touch it to turn on / off random playback.

Touch it go to EQ mode

Select the subtitle language

Touch it setting the display brightness of TFT panel

Touch it go to setting

T 0001/0002 Press it to select title (only the file has many files)

C 0001/0029 Press it to select file

PBC In VCD mode touch it can choose PBC ON or OFF

USB/SD Operation

When a file of USB or SD card is played (music, video, photo), the screen will show following interface:

Press it to repeat REP 1 => REP DIR => REP ALL

Press it to skip to the previous track

Play/pause button. Press it to break the track, press again to resume playback.
to resume playback

Press it to skip to the next track

C 0001/0029 Press it to select file

T 0001/0002 Press it to select title (only the file has many files)

Press it to play track randomly

Rotate the image in the sequence of ×90×180×270

Change the image playback direction

Zoom the image in or out in the sequence of
×2×3×4×5×1/2× 1/3 ×1/4

Settings Operation

Setting Control

Your device has default system setting, you can customize the settings to suit your personal needs. Once you change settings, your new settings will remain until you change it again. To start setting, tap it on main menu.

General Control

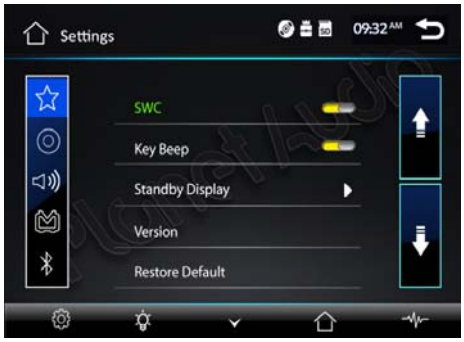

OSD Language	: select English/Spanish
Wallpaper	:select and change the wallpaper setting
Panel Adjust	:calibrate the touch panel
Radio Area	:select radio area, from Europe— USA— South America—Russian— Asia
Clock & Calendar	:setting the clock and date
SWC	: program Steering Wheel Control
Key Beep	:set beep sound on or off
Standby Display	:set standby display on or off
Version	: just show you the firmware version
Restore Default	

Tap Wallpaper button to setup wallpaper

Tap Panel Adjust button to setup panel touch

Tap center of the tap five point, + and hold at least 2S, after then it will show OK in the picture. and press OK exit calibration mode.

Settings Operation

Tap time setting button to setup time

Tap SWC item to program SWC

1) First check whether the car has steering wheel button.
2) The steering wheel and the unit must be connected on the line.
3) While holding down the button on the steering wheel and the corresponding button on the SWC interface it will display complete setting. When all the buttons on the steering wheel and the corresponding button on the SWC interface complete setting, you can use the steering wheel button to operation the unit, such as in radio mode, press ⏮ button or ⏭ button to search station backward or forward; In DVD mode, press ⏮ button or ⏭ button to select the previous or next track and activate fast reverse (REW) search or fast forward in a track, press VOL+ button or VOL - button to adjust the volume.

Note:

1. The “Enter” button and the “reset” button are not included in steering wheel, press the “enter” button to confirm the select, press the “reset” button to clear the former select.
2. The restriction of use SWC is the voltage between the adjacent buttons are above 0.2V that can be identified.

DVD Setup Menu

Audio Language	: select desired language
Subtitle Language	:select desired language
Menu Language	:select desired language
Password	
Rating	

[1].**Subtitle Lang setting:**

With this option you can select the preferred language for the subtitles. When the selected language is recorded on the disc then this language will automatically be shown. If not, the first language recorded on the disc is displayed.

[2].**Audio Lang setting:**

With this option you can select the preferred language for the audio output. When the selected language is recorded on the disc (not all discs have multiple languages recorded) then this language will automatically be played. If not, the first language recorded on the disc is played

[3]. **DVD Menu Lang setting:**.

With this option you can select the preferred language for the disc menu. When the selected language is recorded on the disc then this language will automatically be selected. If not, the first language recorded on the disc is displayed.

Sound Control

Sound Effect
Subwoofer
Loudness : select on/off
Loud Cut off Freq:

Tap EQ button to show following interface

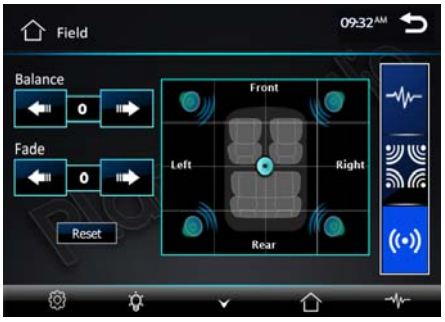

EQ : select User—Classic—Rock—Pop—Jazz—Electric—Flat
Reset

TV Type

Aspect ratio : select 4:3PS/4:3LB /16:9
Adjust : adjust screen brightness /contrast/Hue/Saturation/Sharpness
Panel :setting backlight time

Set TFT screen mode to the correct ratio:
Three screen ratio modes are available, Normal/PS (4:3 Pan Scan) and Normal/LB (4:3Letterbox) Different disc formats will display different images depending this setting and the screen size used.
Note: additional wide 16:9 only for DVD player.

Settings Operation

Bluetooth section

Auto connect: select on/off
Auto answer : select on/off

Subwoofer

Connect the subwoofer to the unit using sub output (see electrical diagram), tap menu on screen enter into main menu setting choose setting menu., choose sound and set subwoofer on to enable subwoofer.

Parking

When the car is stopped and the parking brake is working, the screen can display the video image, otherwise the screen can't display the video image.

Back View Camera

This unit is equipped with back view camera output. The camera is used to observe the situation behind the vehicle when you are backing the car.

Please connect your back view camera with the back car video input. And connect the reverse wire for back a car with the rear gear light. Rear view camera picture will be enabled when you are backing the car.

Bluetooth Operation

Warning: Driving and having a telephone conversation at the same time is dangerous, please park your car before having a telephone conversation. The supplier waves any and all liability when this warning is not followed.

To enter bluetooth mode, you can tap bluetooth icon on main menu or long press the mute/bluetooth button on the remote control or press mode button on remote.

Tap calling button to use phone functions.

Tap music button to start bluetooth music player.

Pairing Mode

At the 1st time when using bluetooth, you need to pair the mobile phone first.

When a phone has not been paired with the unit, the BT icon and pairing mark will blink continually on the panel.

When the unit have connect with phone, the BT icon will turn on and the mobile phone name (if available) will be display on the panel.

According to mobile pairing device manual, after searching new device (BT friendly name: Planet Audio P9640B) select it, input password "0000" and confirm ok, device paring is finished.

The phone name will available on the panel after the pairing is completed. It means device is connected and ready for bluetooth communication.

Auto-connect - Disconnect

When power on the unit, the last paired phone will be connected to the device via Bluetooth automatically, it can keep five phone names in the unit. Tap will delete from the first paired phone. if you want to disconnect the bluetooth connection, turn off the mobile phone Bluetooth function or tap the phone name in the list , and tap phone name again it will be connected again.

Bluetooth Operation

Calling Button

Tap on calling button to enter call mode.

In call mode, the unit can be used as your phone, making and receiving calls are possible with bluetooth, simply tap phone number and tap button to make a call, and tap button to hang up.

1) Tap clear button shortly to delete a wrong digit, tap the clear button or press RDM/C button on remote for 3-4 seconds to delete all the numbers at once.

2) Tap the button for 3-4 seconds, the device automatically makes a call to the latest call in its call log.

3) The volume will be operated separately while calling.

4) In handsfree mode, press the icon , it will ask or enter into a menu to download phonebook.

5)Tap the can see phonebook.

6)Tap the can search phonebook contacts.

Note: the phonebook only supports western characters, any difference in character will be shown such as “+, * or #”.

BT Phone Book

The unit can download the data from phone when the pairing between a phone and the unit is completed.

The unit displays the data which have been downloading from a phone.

Please note that certain mobile device functions are not supported. Phonebook contacts will be listed in alphabetical order.

Voice Transfer

During a call, you can change a call from bluetooth mode to phone by tapping transfer button, to have a call in bluetooth mode again, tap transfer button.

Note: the phonebook only supports western characters, any difference in character will be shown such as “+, * or #”.

(A2DP) Music Mode

Tap music button to listen music in bluetooth mode.
Tap the button for ‘music’ in bluetooth main menu.
You can select the function with the key for previous, play / pause, stop, and next.

A2DP(Advanced Audio Distribution Profile) Music Player

A2DP is a function which can receive the audio frequency signal from the mobile phone, amplified by the car audio and played out by the car speakers.

Notice: your mobile phone need to support A2DP.

Tap the buttons on the screen as shown, or press corresponding buttons (pause/play, stop, previous/next) on remote control to play, pause, play previous, or next music file.

Aux-In Operation

Aux-In MODE

To start Aux-In Mode, tap Aux-In icon from main menu screen. connect the external audio signal source to this unit will display “NOW PLAYING”.

Note: Aux-In does not support a video display function. So, there is “NO SIGNAL DETECTED” displayed if no audio signal input. Press the icon to be back to main menu.

FCC warning:

Any Changes or modifications not expressly approved by the party responsible for compliance could void the user's authority to operate the equipment.

Note: This equipment has been tested and found to comply with the limits for a Class B digital device, pursuant to part 15 of the FCC Rules. These limits are designed to provide reasonable protection against harmful interference in a residential installation. This equipment generates uses and can radiate radio frequency energy and, if not installed and used in accordance with the instructions, may cause harmful interference to radio communications. However, there is no guarantee that interference will not occur in a particular installation. If this equipment does cause harmful interference to radio or television reception, which can be determined by turning the equipment off and on, the user is encouraged to try to correct the interference by one or more of the following measures:

-Reorient or relocate the receiving antenna.

-Increase the separation between the equipment and receiver.

-Connect the equipment into an outlet on a circuit different from that to which the receiver is connected.

-Consult the dealer or an experienced radio/TV technician for help.

This equipment complies with FCC radiation exposure limits set forth for an uncontrolled environment. This equipment should be installed and operated with minimum distance 20cm between the radiator & your body.

Notes of Disc

✧ In order to view videos, the parking brake wire must be connected, and the vehicle stopped

Handling discs

Handling

When holding With both hands

When holding with one hand

- Do not use damaged (cracked or warped) discs.
- Do not scratch the signal surface or let it get dirty.
- Do not attach paper or seals to discs. The player may be damaged if there is any exposed glue, etc., On discs. For rental discs in particular,extra labels are often attached to the discs. Check carefully for any exposed glue before using such discs.

Storing discs

- Always place discs in their case and store them vertically. Avoid storing discs in hot or humid places, places exposed to direct sunlight and places in which the temperature is extremely low.
- Read any cautions included with the discs carefully.

Cleaning discs

- Fingerprints or dust on discs may reduce sound or picture quality. Remove them by gently wiping the disc from the center toward the edges using a soft cloth.

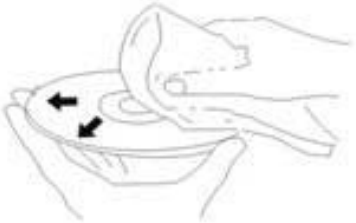

- Do not use benzene, thinner or other volatile chemicals. Do not use record spray or antistatic spray either.
- We recommend using the separately sold cleaning set to clean discs.
- For tough dirt, apply some water to a soft cloth, wring out thoroughlywipe off the dirt, then wipe the disc with a dry cloth.

Irregular shaped discs
Irregular shaped discs(heart-shaped discs, hexagonal discs, etc.)Cannot be played on this playeDoing so could damage the player.
Never use such discs.

Troubleshooting

	Symptom	Cause	Remedy
General	Power does not turn on (No sound is produced)	Fuse is blown	Replace with fuse of the same amperage. If the fuse blows again, consult your store of purchase
		In correct wiring	Consult your local retailer
	No sound output when operating the unit with amplifiers or power antenna attached	Power antennal lead is shorted to ground, excessive current is required or remote on the amplifiers or power antenna	1. Turn off the unit 2. Remove all wires attached to the power antenna lead, check each wire for a possible short to ground using an ohm meter 3. Turn on the unit 4. Reconnect each amplifier remote wire to the power antenna lead one by one. If the amplifiers turn off before all wires are attached, use an external replay to provide remote-on voltage (excessive current required)
	Nothing happens when buttons are pressed Display is not Accurate	Unit needs to be Reset	Using a pen or toothpick, press and release the Reset button.
		Panel or main unit Connectors are dirty	Wipe the dirt off with a soft cloth moistened with cleaning alcohol
CD	Sound is bad directly after power is turned on	Compact disc is dirty	Clean the compact disc without scratches
		Compact disc is heavily scratched or warped	Replace with a compact disc without scratches
	Sound is bad directly after power is turned on	Water droplets may form on the internal lens when the car is parked in a humid place	Let it dry for about 1 hour with the power on

Troubleshooting

symptom	Cause	Solution
No power	The car ignition is not on	If the power supply is properly connected to the car accessory switch the ignition key to “ACC”
	The fuse is blown	Replace the fuse
Disc cannot be loaded	Presence of disc inside the player	Remove the disc in the player then put a new upward
Disc cannot be read	Inserting the disc in upside down	Insert the compact disc with the label facing upward
	Compact disc is extremely dirty or defective	Clean the disc or try to play a new one
	Temperature inside the car is too high	Cool off until the ambient temperature returns to normal
No sound	Volume is in minimum	Adjust volume to a desired level
	Wiring is not properly connected	Check wiring connection
The operation keys do not work	The built-in microcomputer is not operating properly due to noise	Press the power button for about 10 seconds to reset the unit
	Front panel is not properly fix into its place	
Sound skips	The installation angle is more than 30 degrees	Adjust the installation angle to less than 30 degrees
	The disc is extremely dirty or defective	Clean the compact disc/try to play a new one
The radio does not work, the radio station automatic selection does not work	The antenna cable is not connected the signals are too weak	Insert the antenna cable firmly select a station manually

General Specification

General	
Power supply	11~16V DC
Current consumption	Max. 10 A
Maximum power output	80W x 4 channels (max)
Compatible formats	DVD ±R/RW Video, CD ±R/RW Audio & Video
Dimensions (W x D x H) / weight	7.0” x 6.4” x 3.9” /7.5 lbs
Working temperature range	-20°F -- +140°F
ESP function	10 sec. for Audio CD, 120 sec. for MP3
TFT display	
Screen size	6.2 inch
Resolution	800*480 pixel
Aspect ration	4:3/16:9
Brightness	450 cd/㎡
Contrast ratio	500:1
FM radio	
Frequency range(Europe area)	FM:87.5 –108MHz(Step 50KHz)
Frequency range(America area)	FM:87.5 –107.9MHz(Step 200KHz)
Frequency range(Asia area)	FM:87.5 –108MHz(Step 100KHz)
Frequency range(South America area)	FM:87.5 –108MHz(Step 100KHz)
Frequency range(Russia area)	FM:87.5 –108MHz(Step 50KHz) 65-74MHz(Step 30KHz)
Preset memory stations	18
AM(MW)radio	
Frequency range(Europe area)	AM:522-1620(Step 9KHz)
Frequency range(America area)	AM:530-1710(Step 10KHz)
Frequency range(Asia area)	AM:531-1602(Step 9KHz)
Frequency range(South America area)	AM:520-1710(Step 10KHz)
Frequency range(Russia area)	AM:522-1620(Step 9KHz)
Preset memory stations	12
Audio specification	
Frequency response	20 Hz-20 KHz
TV Color System	Color system NTSC/PAL
USB interface	
USB type	USB 2.0 full speed
Support format	MP3 , WMA, MPEG1, MPEG2, AVI

Specifications are subject to change without notice, mass and dimension are approximate.

Planet Audio

USER'S MANUAL

P9640B

BLUETOOTH® DVD/MP3 AM/FM RECEIVER
6.2" (157MM) WIDESCREEN TOUCHSCREEN
DIGITAL TFT LED MONITOR

www.planetaudiousa.com

TELEPHONE
888-990-1236 US Toll-free
805-751-4854 Customer Service

TECHNICAL SUPPORT
www.planetaudiousa.com/customer-support/

CE e1

1017

iPod® is a trademark of Apple, Inc. registered in the U.S. and other countries.
Planet Audio is not affiliated with Apple, Inc.
The Bluetooth® word mark and logos are registered trademarks owned by Bluetooth SIG, Inc. and any use of such marks by Planet Audio is under license. Other trademarks and trade names are those of their respective owners.