Test Laboratory: UnionTrust Date: 2025/3/1

System Check-D2450V2_H2450

DUT: Dipole 2450 MHz D2450V2 SN:883

Communication System: UID 0, CW; Frequency: 2450 MHz;Duty Cycle: 1:1
Medium: H2450 Medium parameters used: f = 2450 MHz; σ = 1.827 S/m; ε_r = 37.964; ρ = 1000 kg/m^3

DASY4 Configuration:
- Probe: EX3DV4 - SN7506; ConvF(6.78, 7.22, 6.73) @ 2450 MHz; Calibrated: 2024/11/12
- Sensor-Surface: 1.4mm (Mechanical Surface Detection)
- Electronics: DAE4 Sn662; Calibrated: 2024/3/18
- Phantom: SAM 1; Type: QD 000 P40 CB; Serial: TP/1378
- Postprocessing SW: SEMCAD, V1.8 Build 186

Pin=100 mW/Area Scan (71x81x1): Interpolated grid: dx=1.200 mm, dy=1.200 mm
Maximum value of SAR (interpolated) = 8.15 W/kg

Pin=100 mW/Zoom Scan (7x7x7)/Cube 0: Measurement grid: dx=5mm, dy=5mm, dz=5mm
Reference Value = 67.60 V/m; Power Drift = -0.01 dB
Peak SAR (extrapolated) = 9.39 W/kg
SAR(1 g) = 5.14 W/kg; SAR(10 g) = 2.43 W/kg
Smallest distance from peaks to all points 3 dB below = 8.9 mm
Ratio of SAR at M2 to SAR at M1 = 54.6%
Maximum value of SAR (measured) = 7.95 W/kg

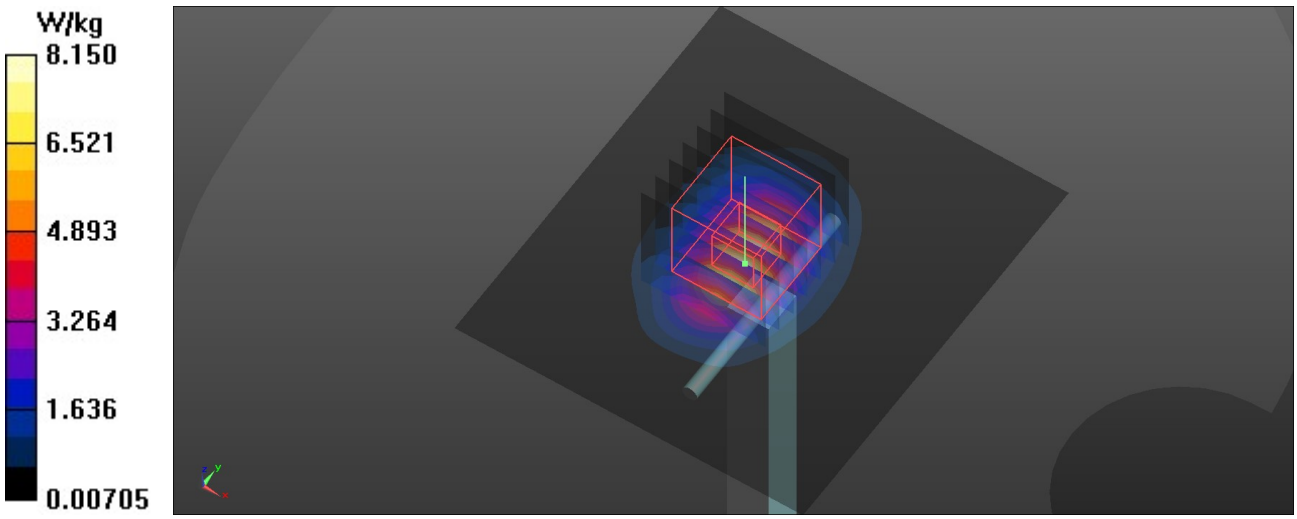

Test Laboratory: UnionTrust Date: 2025/3/1

System Check-D5GHz_H5250

DUT: Dipole D5GHzV2 SN:1115

Communication System: UID 0, CW; Frequency: 5250 MHz;Duty Cycle: 1:1
Medium: H5G Medium parameters used: f = 5250 MHz; σ = 4.742 S/m; ε_r = 36.257; ρ = 1000 kg/m^3

DASY4 Configuration:
- Probe: EX3DV4 - SN7506; ConvF(5.63, 6, 5.58) @ 5250 MHz; Calibrated: 2024/11/12
- Sensor-Surface: 1.4mm (Mechanical Surface Detection)
- Electronics: DAE4 Sn662; Calibrated: 2024/3/18
- Phantom: SAM 1; Type: QD 000 P40 CB; Serial: TP/1378
- Postprocessing SW: SEMCAD, V1.8 Build 186

Pin=100mW/Area Scan (91x91x1): Interpolated grid: dx=1.000 mm, dy=1.000 mm
Maximum value of SAR (interpolated) = 19.8 W/kg

Pin=100mW/Zoom Scan (8x8x8)/Cube 0: Measurement grid: dx=4mm, dy=4mm, dz=1.4mm
Reference Value = 66.69 V/m; Power Drift = -0.01 dB
Peak SAR (extrapolated) = 33.0 W/kg
SAR(1 g) = 8.36 W/kg; SAR(10 g) = 2.42 W/kg
Smallest distance from peaks to all points 3 dB below = 7.4 mm
Ratio of SAR at M2 to SAR at M1 = 65.6%
Maximum value of SAR (measured) = 19.2 W/kg

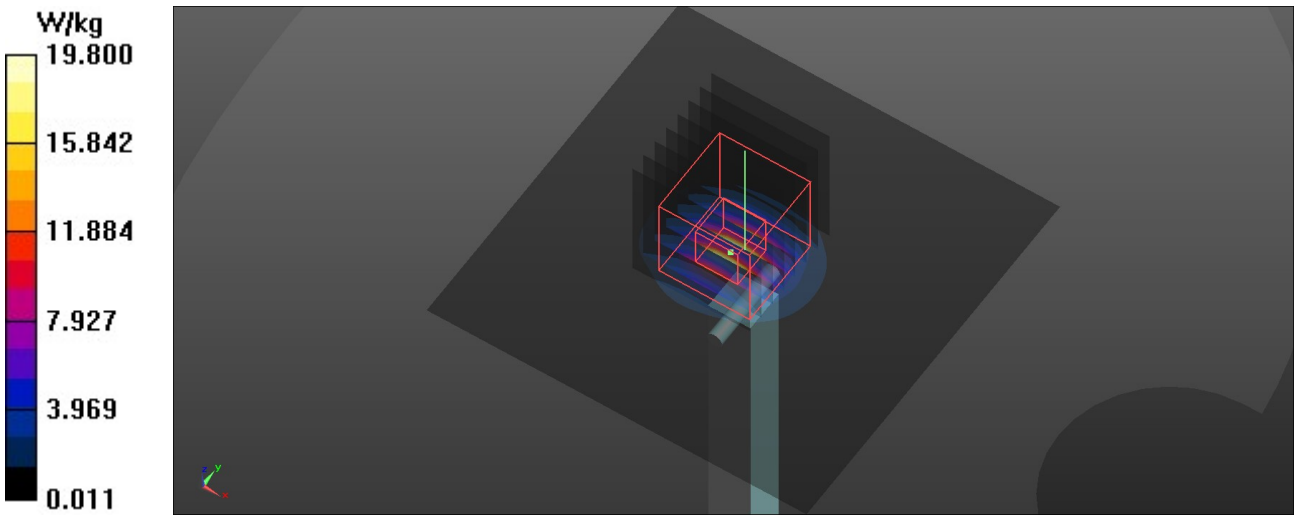

Test Laboratory: UnionTrust Date: 2025/3/2

System Check-D5GHz_H5600

DUT: Dipole D5GHzV2 SN:1115

Communication System: UID 0, CW; Frequency: 5600 MHz;Duty Cycle: 1:1
Medium: H5G Medium parameters used: f = 5600 MHz; σ = 5.1 S/m; ε_r = 35.744; ρ = 1000 kg/m^3

DASY4 Configuration:
- Probe: EX3DV4 - SN7506; ConvF(5.26, 5.6, 5.22) @ 5600 MHz; Calibrated: 2024/11/12
- Sensor-Surface: 1.4mm (Mechanical Surface Detection)
- Electronics: DAE4 Sn662; Calibrated: 2024/3/18
- Phantom: SAM 1; Type: QD 000 P40 CB; Serial: TP/1378
- Postprocessing SW: SEMCAD, V1.8 Build 186

Pin=100mW/Area Scan (91x91x1): Interpolated grid: dx=1.000 mm, dy=1.000 mm
Maximum value of SAR (interpolated) = 21.0 W/kg

Pin=100mW/Zoom Scan (8x8x7)/Cube 0: Measurement grid: dx=4mm, dy=4mm, dz=1.4mm
Reference Value = 66.33 V/m; Power Drift = -0.08 dB
Peak SAR (extrapolated) = 38.0 W/kg
SAR(1 g) = 8.63 W/kg; SAR(10 g) = 2.45 W/kg
Smallest distance from peaks to all points 3 dB below = 7.2 mm
Ratio of SAR at M2 to SAR at M1 = 62.2%
Maximum value of SAR (measured) = 20.5 W/kg

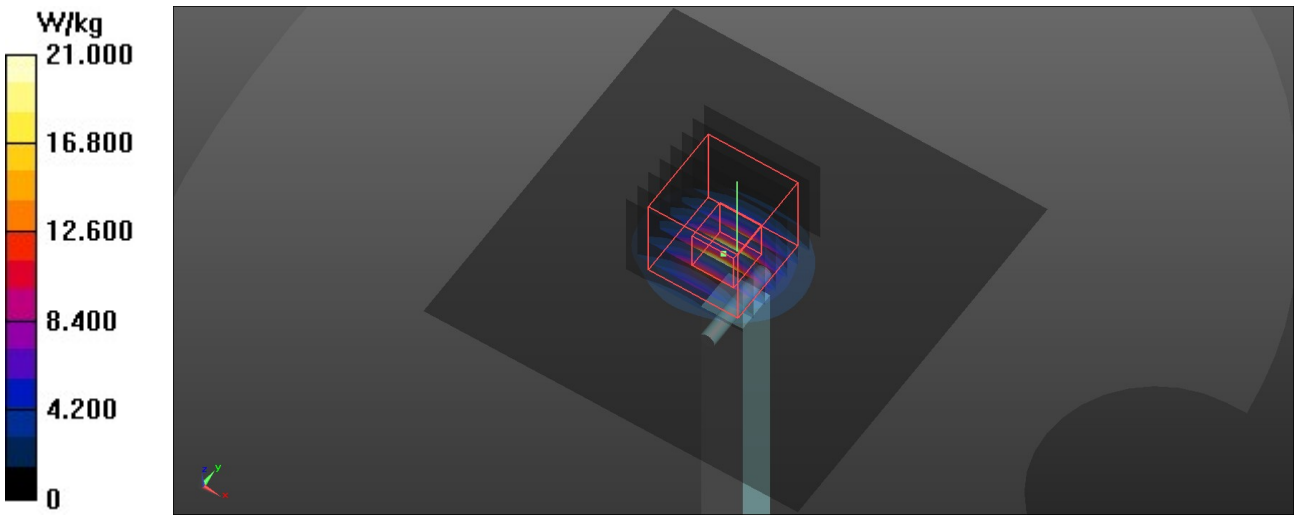

Test Laboratory: UnionTrust Date: 2025/3/2

System Check-D5GHz_H5800

DUT: Dipole D5GHzV2 SN:1115

Communication System: UID 0, CW; Frequency: 5800 MHz;Duty Cycle: 1:1
Medium: H5G Medium parameters used: f = 5800 MHz; σ = 5.314 S/m; ε_r = 35.454; ρ = 1000 kg/m^3

DASY4 Configuration:
- Probe: EX3DV4 - SN7506; ConvF(5.12, 5.45, 5.08) @ 5800 MHz; Calibrated: 2024/11/12
- Sensor-Surface: 1.4mm (Mechanical Surface Detection)
- Electronics: DAE4 Sn662; Calibrated: 2024/3/18
- Phantom: SAM 1; Type: QD 000 P40 CB; Serial: TP/1378
- Postprocessing SW: SEMCAD, V1.8 Build 186

Pin=100mW/Area Scan (91x91x1): Interpolated grid: dx=1.000 mm, dy=1.000 mm
Maximum value of SAR (interpolated) = 20.2 W/kg
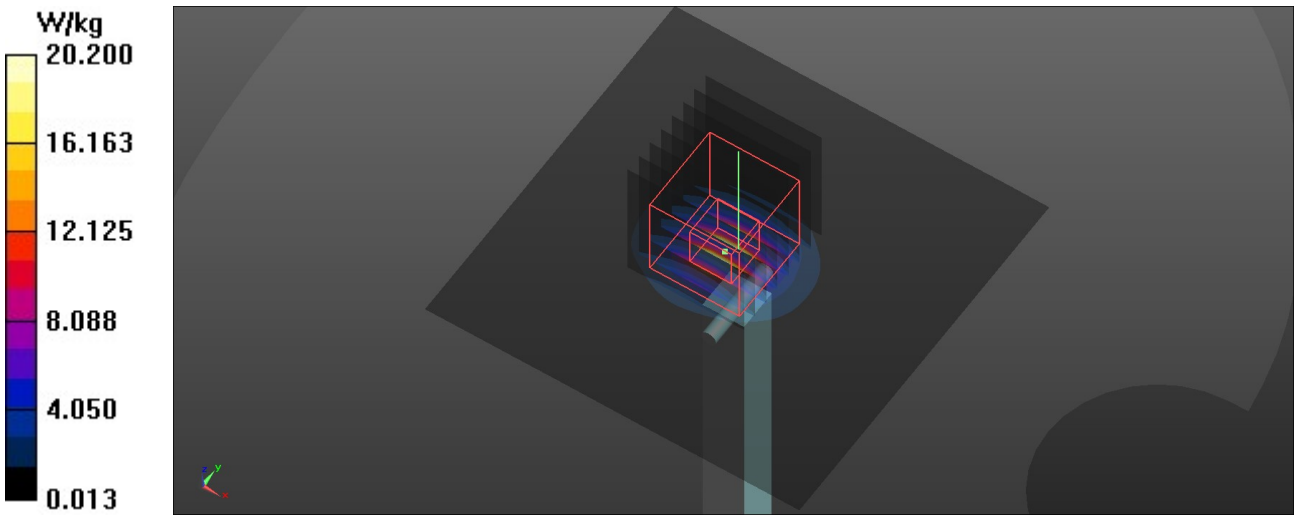
Pin=100mW/Zoom Scan (8x8x8)/Cube 0: Measurement grid: dx=4mm, dy=4mm, dz=1.4mm
Reference Value = 62.74 V/m; Power Drift = 0.00 dB
Peak SAR (extrapolated) = 37.1 W/kg
SAR(1 g) = 8.08 W/kg; SAR(10 g) = 2.3 W/kg
Smallest distance from peaks to all points 3 dB below = 7.4 mm
Ratio of SAR at M2 to SAR at M1 = 60.8%
Maximum value of SAR (measured) = 19.4 W/kg