TEST REPORT

Applicant Name:	Grandstream Networks, Inc.
Address:	126 Brookline Ave., 3rd Floor Boston, MA 02215, USA
Report Number:	2604U27448E-RF-00E
FCC ID:	YZZGRP2615PRO

Test Standard (s)

FCC PART 15.407

Sample Description

Product Name:	Carrier-Grade HD IP Phone
Model No.:	GRP2615 Pro
Trade Mark:	GRANDSTREAM
Received Date:	2026-06-17
Report Date:	2026-09-10

Test Result:	The EUT complied with the standards above.

Prepared and Checked By:

Amanda Wei

Amanda Wei
Engineer

Approved By:

Bob. Liao

Bob Liao
Supervisor

The information marked "#" is provided by the applicant, the laboratory is not responsible for its authenticity and this information can affect the validity of the result in the test report. Customer model name, addresses, names, trademarks etc. are included but no need marked.
This report cannot be reproduced except in full, without prior written approval of the Company. Unless otherwise stated the results shown in this test report refer only to the sample(s) tested. This report is valid only with a valid digital signature. The digital signature may be available only under the Adobe software above version 7.0.

TABLE OF CONTENTS

DOCUMENT REVISION HISTORY **3**

GENERAL INFORMATION **4**

PRODUCT DESCRIPTION FOR EQUIPMENT UNDER TEST (EUT) 4
OBJECTIVE 4
TEST METHODOLOGY 4
TEST FACILITY 4

SYSTEM TEST CONFIGURATION **5**

DESCRIPTION OF TEST CONFIGURATION 5
EUT EXERCISE SOFTWARE# 5
EQUIPMENT MODIFICATIONS 5
SUPPORT EQUIPMENT LIST AND DETAILS 5
EXTERNAL I/O CABLE 5

SUMMARY OF TEST RESULTS **6**

TEST EQUIPMENT LIST **7**

APPLICABLE STANDARDS **8**

DFS REQUIREMENT 8
DFS PARAMETERS 9
TEST PROCEDURE 10

MEASUREMENT SYSTEM **11**

DFS MEASUREMENT SYSTEM 11
SYSTEM BLOCK DIAGRAM 11
CONDUCTED METHOD 11
TEST PROCEDURE 12

TEST RESULT **13**

APPENDIX A: DFS DETECTION THRESHOLDS 14
APPENDIX B: CHANNEL MOVE TIME AND CHANNEL CLOSING TRANSMISSION TIME 16
APPENDIX C: NON-OCCUPANCY PERIOD 18

EXHIBIT A-EUT PHOTOGRAPHS **20**

EXHIBIT B-TEST SETUP PHOTOGRAPHS **21**

DOCUMENT REVISION HISTORY

Revision Number	Report Number	Description of Revision	Date of Revision
Rev.00	2604U27448E-RF-00E	Original Report	2026-09-10

GENERAL INFORMATION

Product Description for Equipment under Test (EUT)

Product Name	Carrier-Grade HD IP Phone
Tested Model	GRP2615 Pro
Voltage Range#	DC 5V from adapter or DC 48V from POE
Adapter 1 Information#	Model:DCT12W050200US-A2 Input:100-240 V~ 50/60Hz 0.3A Max Output:5.0V ⎓2.0A
Adapter 2 Information#	Model: GQ12-050200-AU Input: 100-240V~ 50/60Hz 0.4A max Output: 5.0V ⎓2.0A
Adapter 3 Information#	Model: GLH0502000 Input: 100-240V~ 50/60Hz 0.5A max Output: 5.0V ⎓2.0A 10.0W
Note: The EUT powered by adapter or POE.	

Frequency Range	5G Wi-Fi: 5250-5350MHz; 5470-5725MHz
Mode	802.11 a/n20/n40/ac20/ac40/ax20/ax40
Maximum Conducted Output Power(Average) (actual test result)	5250-5350MHz: 13.55 dBm
	5470-5725MHz: 13.11 dBm
Modulation Technique	OFDM, OFDMA
Sample Serial Number	3OJN-1 (Assigned by BACL, Shenzhen, Guangming)
Sample/EUT Status	Good condition
Note: The device is belong a client device.	

Objective

This test report is in accordance with Part 2-Subpart J, Part 15-Subparts E of the Federal Communications Commission's rules.

The objective is to determine compliance with FCC Part 15, Subpart E, section 15.407 Dynamic Frequency Selection (DFS) for devices operating in the bands 5250-5350 MHz, 5470-5725 MHz.

Test Methodology

FCC KDB 905462 D02 UNII DFS Compliance Procedures New Rules v02.

FCC KDB 905462 D03 Client Without DFS New Rulesv01r02

Unless otherwise stated there are no any additions to, deviations, or exclusions from the method.

Test Facility

The test site used by Bay Area Compliance Laboratories Corp. (Shenzhen, Guangming) to collect test data is located on the Floor 1, KuMaKe Building, Dongzhou Community, Guangming Street, Guangming District, Shenzhen, Guangdong, China.

Accredited by American Association for Laboratory Accreditation (A2LA).The Certificate Number is 4297.01.

SYSTEM TEST CONFIGURATION

Description of Test Configuration

The EUT was configured for testing in an engineering mode which was provided by the manufacturer.

EUT Exercise Software#

Exercise Software:	Iperf
WLAN traffic is generated by software " Iperf ", software is used by IP and Frame based systems for loading the test channel during the In-service compliance testing of the U-NII device. Data packet streamed from the Access Point to the Client using the software "Iperf".	

Note: The information in the above table is provided by the applicant.

Equipment Modifications

No modification was made to the EUT tested.

Support Equipment List and Details

Manufacturer	Description	Model	Serial Number
LENOVO	Laptop	ThinkPad x240	SL10F31638JS
Grandstream Networks,Inc	Router	GWN7665 (FCC ID: YZZGWN7665)	C074AB240E1B

External I/O Cable

Cable Description	Shielding Type	Length (m)	From Port	To
RJ45 cable	NO	1.0	Laptop	Router
RJ45 cable	NO	1.0	EUT	Laptop
DC cable	NO	1.5	EUT	Adapter

SUMMARY OF TEST RESULTS

The following result table represents the list of measurements required under the CFR §47 Part 15.407(h)and KDB: 905462 D02 UNII DFS Compliance Procedures New Rules v02

FCC Rules	Description of Test	Result
Detection Bandwidth	UNII Detection Bandwidth	Not Applicable
Performance Requirements Check	Initial Channel Availability Check Time (CAC)	Not Applicable
	Radar Burst at the Beginning of the CAC	Not Applicable
	Radar Burst at the End of the CAC	Not Applicable
In-Service Monitoring	Channel Move Time	Compliance
	Channel Closing Transmission Time	Compliance
	Non-Occupancy Period	Compliance
Radar Detection	Statistical Performance Check	Not Applicable

Note: EUT is a client without radar detection.

TEST EQUIPMENT LIST

Manufacturer	Description	Model	Serial Number	Calibration Date	Calibration Due Date
RF Conducted test					
Rohde & Schwarz	Spectrum Analyzer	FSV-40	101495	2026/05/07	2027/05/06
AGILENT	Vector Signal Generator	N5182A	MY50143401	2026/05/07	2027/05/06
Rohde & Schwarz	Open Switch and Control Unit	OSP120+OSP-B157	101244+100866	2026/05/07	2027/05/06
Agilent	10dB Attenuator	8491B	A5825	2026/05/07	2027/05/06
HEWLETT PACKARD	20dB Attenuator	8491A	53857	2025/09/18	2026/09/17
Unknown	RF Coaxial Cable	No.31	RF-01	2026/05/07	2027/05/06
Unknown	RF Coaxial Cable	No.32	RF-02	2026/05/07	2027/05/06
Test Software: Tonscend JS1120-3 Test System V3.3.38					

*** Statement of Traceability:** Bay Area Compliance Laboratories Corp. (Shenzhen, Guangming) attests that all calibrations have been performed in accordance to requirements that traceable to National Primary Standards and International System of Units (SI).

APPLICABLE STANDARDS

DFS Requirement

CFR §47 Part 15.407(h) & FCC KDB 905462 D02 UNII DFS Compliance Procedures New Rules v02

5.1 DFS Overview

A U-NII network will employ a DFS function to detect signals from radar systems and to avoid co-channel operation with these systems. This applies to the 5250-5350 MHz and/or 5470-5725 MHz bands.

Within the context of the operation of the DFS function, a U-NII device will operate in either Master Mode or Client Mode. U-NII devices operating in Client Mode can only operate in a network controlled by a U- NII device operating in Master Mode.

Table 1: Applicability of DFS Requirements Prior to Use of a Channel

Requirement	Operational Mode		
	Master	Client Without Radar Detection	Client With Radar Detection
Non-Occupancy Period	Yes	Not required	Yes
DFS Detection Threshold	Yes	Not required	Yes
Channel Availability Check Time	Yes	Not required	Not required
U-NII Detection Bandwidth	Yes	Not required	Yes

Table 2: Applicability of DFS requirements during normal operation

Requirement	Operational Mode	
	Master Device or Client with Radar Detection	Client Without Radar Detection
DFS Detection Threshold	Yes	Not required
Channel Closing Transmission Time	Yes	Yes
Channel Move Time	Yes	Yes
U-NII Detection Bandwidth	Yes	Not required

Additional requirements for devices with multiple bandwidth modes	Master Device or Client with Radar Detection	Client Without Radar Detection
U-NII Detection Bandwidth and Statistical Performance Check	All BW modes must be tested	Not required
Channel Move Time and Channel Closing Transmission Time	Test using widest BW mode available	Test using the widest BW mode available for the link
All other tests	Any single BW mode	Not required
Note: Frequencies selected for statistical performance check (Section 7.8.4) should include several frequencies within the radar detection bandwidth and frequencies near the edge of the radar detection bandwidth. For 802.11 devices it is suggested to select frequencies in each of the bonded 20 MHz channels and the channel center frequency.		

5.1.2 Client Devices

a) A Client Device will not transmit before having received appropriate control signals from a Master Device.

b) A Client Device will stop all its transmissions whenever instructed by a Master Device to which it is associated and will meet the Channel Move Time and Channel Closing Transmission Time requirements. The Client Device will not resume any transmissions until it has again received control signals from a Master Device.

c) If a Client Device is performing In-Service Monitoring and detects a Radar Waveform above the DFS Detection Threshold, it will inform the Master Device. This is equivalent to the Master Device detecting the Radar Waveform and d) through f) of section 5.1.1 apply.

d) Irrespective of Client Device or Master Device detection the Channel Move Time and Channel Closing Transmission Time requirements remain the same.

e) The client test frequency must be monitored to ensure no transmission of any type has occurred for 30 minutes. Note: If the client moves with the master, the device is considered compliant if nothing appears in the client non-occupancy period test. For devices that shut down (rather than moving channels), no beacons should appear.

DFS parameters

5.2 DFS Detection Thresholds

Table 3: DFS Detection Thresholds for Master Devices and Client Devices With Radar Detection

Maximum Transmit Power	Value (See Notes 1, 2, and 3)
EIRP ≥ 200 milliwatt	-64 dBm
EIRP < 200 milliwatt and power spectral density < 10 dBm/MHz	-62 dBm
EIRP < 200 milliwatt that do not meet the power spectral density requirement	-64 dBm
Note 1: This is the level at the input of the receiver assuming a 0 dBi receive antenna. **Note 2:** Throughout these test procedures an additional 1 dB has been added to the amplitude of the test transmission waveforms to account for variations in measurement equipment. This will ensure that the test signal is at or above the detection threshold level to trigger a DFS response. **Note3:** EIRP is based on the highest antenna gain. For MIMO devices refer to KDB Publication 662911 D01.	

5.3 Response Requirements

Table 4: DFS Response Requirement Values

Parameter	Value
Non-occupancy period	Minimum 30 minutes
Channel Availability Check Time	60 seconds
Channel Move Time	10 seconds See Note 1.
Channel Closing Transmission Time	200 milliseconds + an aggregate of 60 milliseconds over remaining 10 second period. See Notes 1 and 2.
U-NII Detection Bandwidth	Minimum 100% of the U-NII 99% transmission power bandwidth. See Note 3.

Note 1: *Channel Move Time* and the *Channel Closing Transmission Time* should be performed with Radar Type 0. The measurement timing begins at the end of the Radar Type 0 burst.
Note 2: The *Channel Closing Transmission Time* is comprised of 200 milliseconds starting at the beginning of the *Channel Move Time* plus any additional intermittent control signals required to facilitate a *Channel* move (an aggregate of 60 milliseconds) during the remainder of the 10 second period. The aggregate duration of control signals will not count quiet periods in between transmissions.
Note 3: During the *U-NII Detection Bandwidth* detection test, radar type 0 should be used. For each frequency step the minimum percentage of detection is 90 percent. Measurements are performed with no data traffic.

Test Procedure

● **Channel Move Time and Channel Closing Transmission Time**

Channel Move Time and the Channel Closing Transmission Time should be performed with Radar Type 0. The measurement timing begins at the end of the Radar Type 0 burst. repeat using a long pulse radar type5 waveform.

The Channel Closing Transmission Time is comprised of 200 milliseconds starting at the beginning of the Channel Move Time plus any additional intermittent control signals required to facilitate a Channel move (an aggregate of 60 milliseconds) during the remainder of the 10 second period. The aggregate duration of control signals will not count quiet periods in between transmissions.

The aggregate channel closing transmission time is calculated as follows:

Aggregate Transmission Time = N*Dwell Time

N is the number of spectrum analyzer bins showing a device transmission Dwell Time is the dwell time per bin (i.e. Dwell Time = S/B, S is the sweep time and B is the number of bin, i.e. 8192)

● **Non-Occupancy Period**

Measure the EUT for more than 30 minutes following the channel close/move time to very that the EUT does not resume any transmissions on this channel. Provide one plot to demonstrate no transmission on the channel for the non-occupancy period (30 minutes observation time)

MEASUREMENT SYSTEM

DFS Measurement System

DFS measurement system consists of two subsystems: (1) The radar signal generating subsystem and (2) the traffic monitoring subsystem.

System Block Diagram

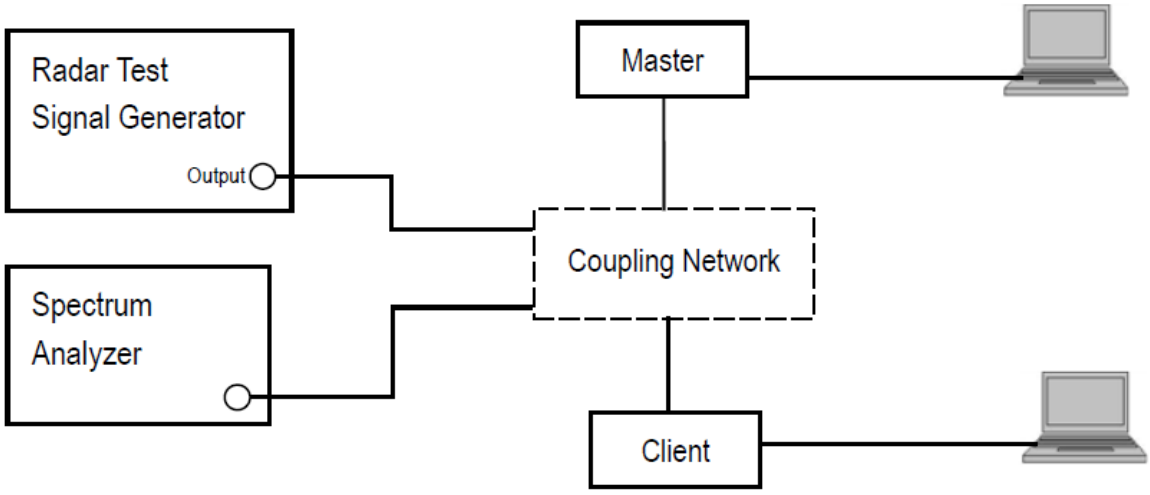

Conducted Method

● **Setup for Master with injection at the Master**

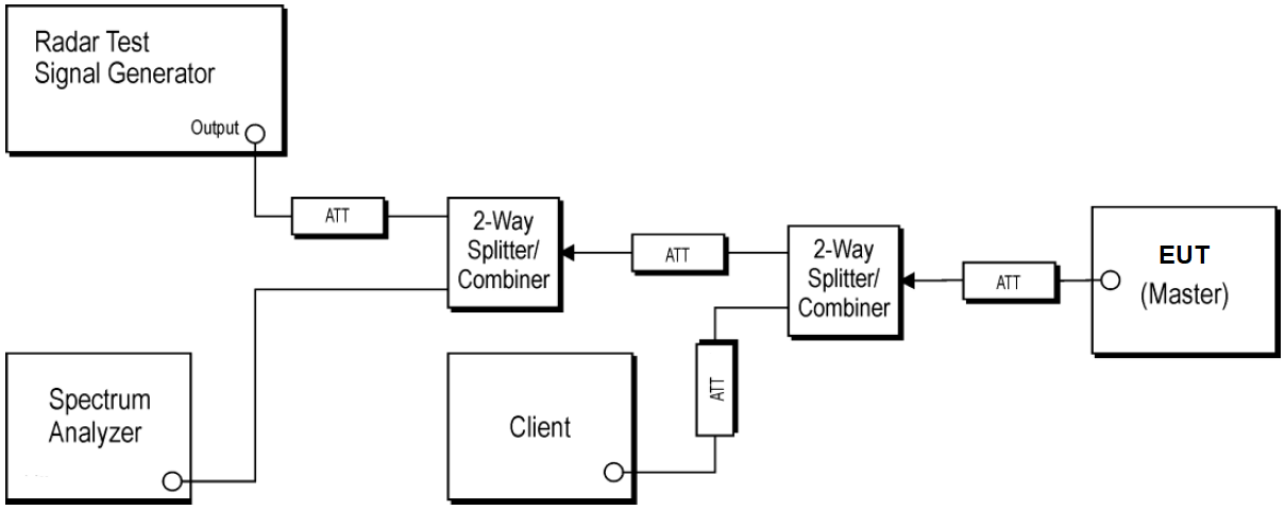

● **Setup for Client with injection at the Master**

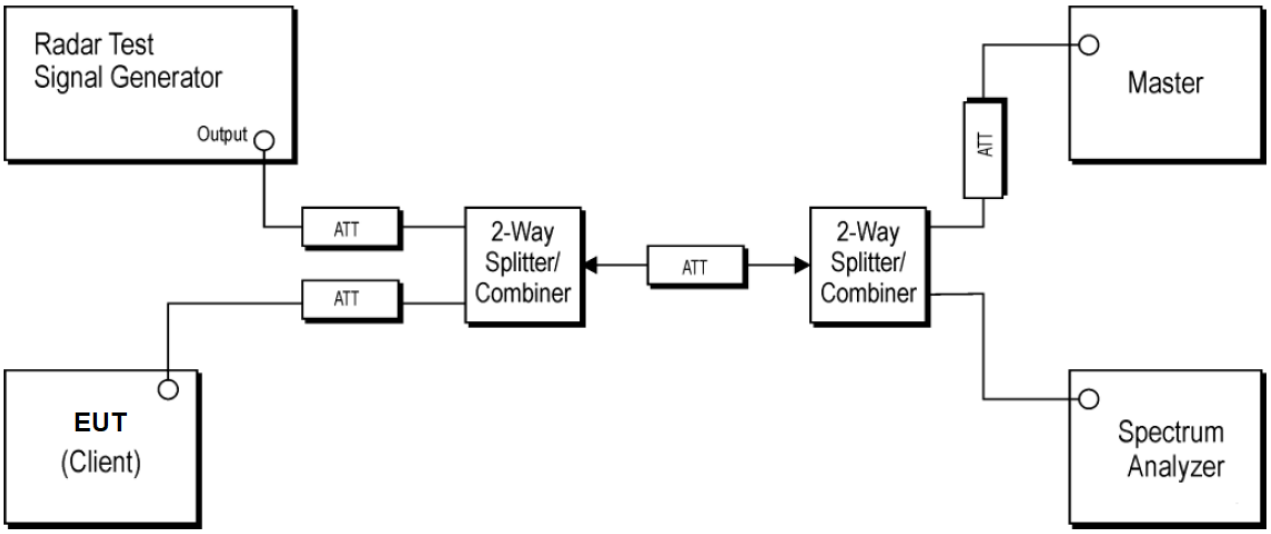

●**Setup for Client with injection at the Client**

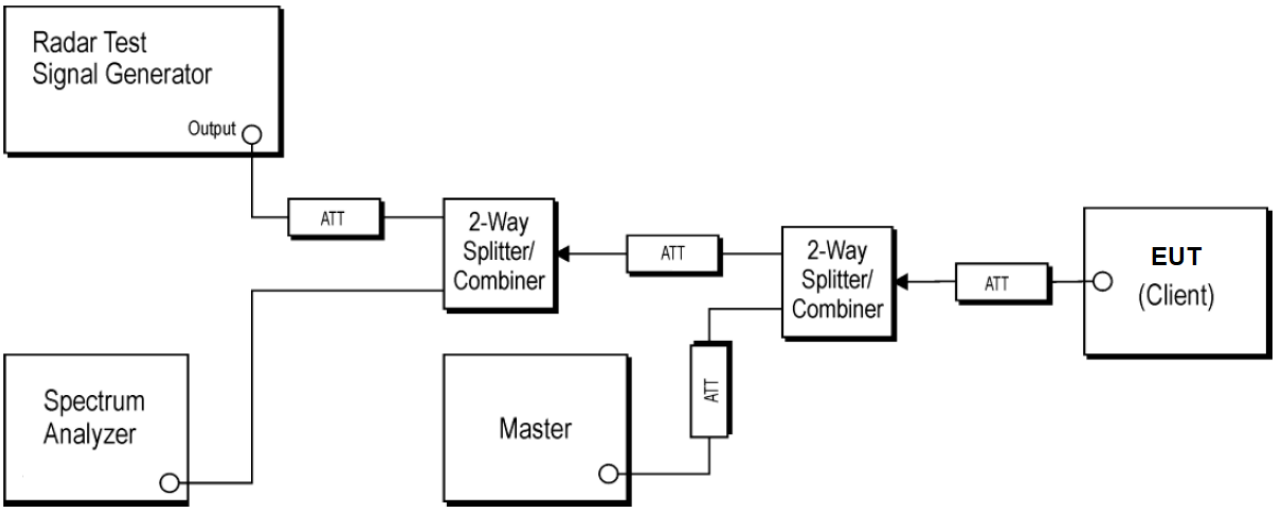

Test Procedure

A spectrum analyzer is used as a monitor verifies that the EUT status including Channel Closing Transmission Time, Channel Move Time and Non-Occupancy Period.

TEST RESULT

Test Information:

Sample No.:	3OJN-1	**Test Date:**	2026/07/07
Test Site:	RF	**Test Mode:**	Traffic
Tester:	Allen Qin	**Test Result:**	Pass

Environmental Conditions:

Temperature: (°C)	25.1	**Relative Humidity: (%)**	48	**ATM Pressure: (kPa)**	100.1

Appendix A: DFS Detection Thresholds

Test Result

Frequency[MHz]	Radar Type	Result[dBm]	Limit[dBm]	Verdict
5260	Type0	-62.19	-62.00	PASS
5500	Type0	-62.27	-62.00	PASS
5270	Type0	-62.32	-62.00	PASS
5510	Type0	-62.50	-62.00	PASS

Test Graphs

5260_Type0

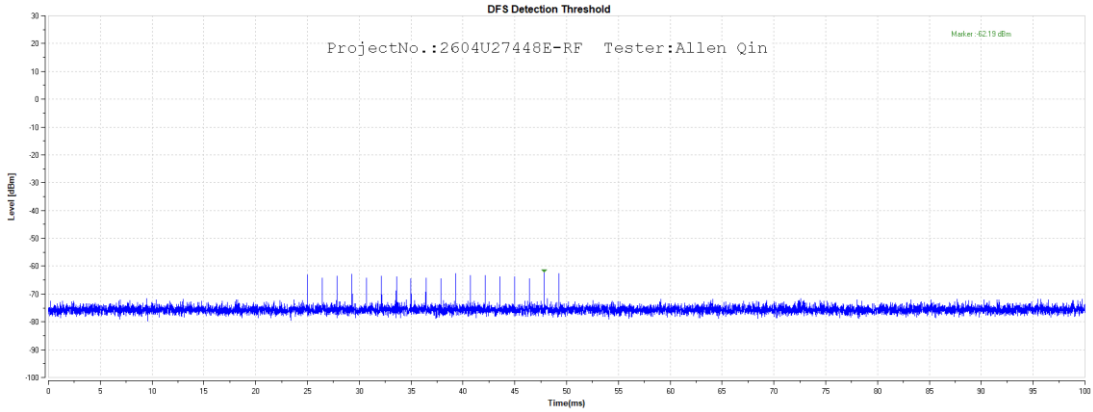

5500_Type0

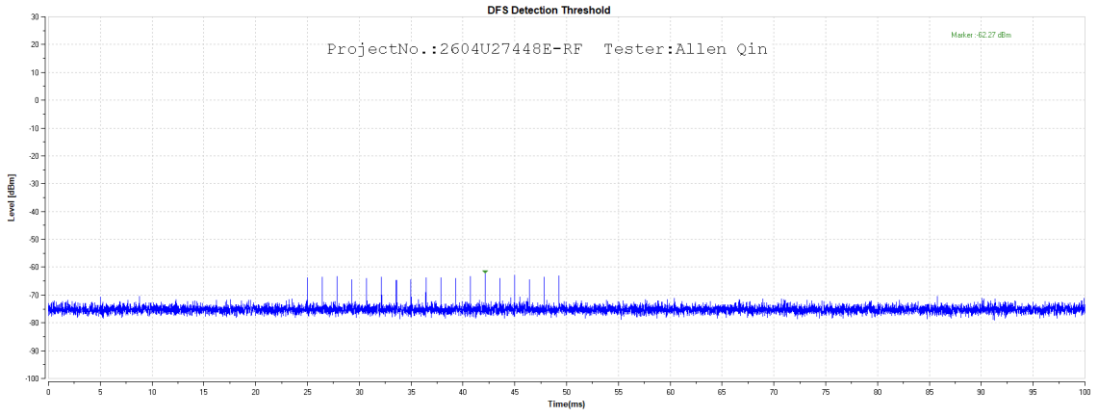

5270_Type0
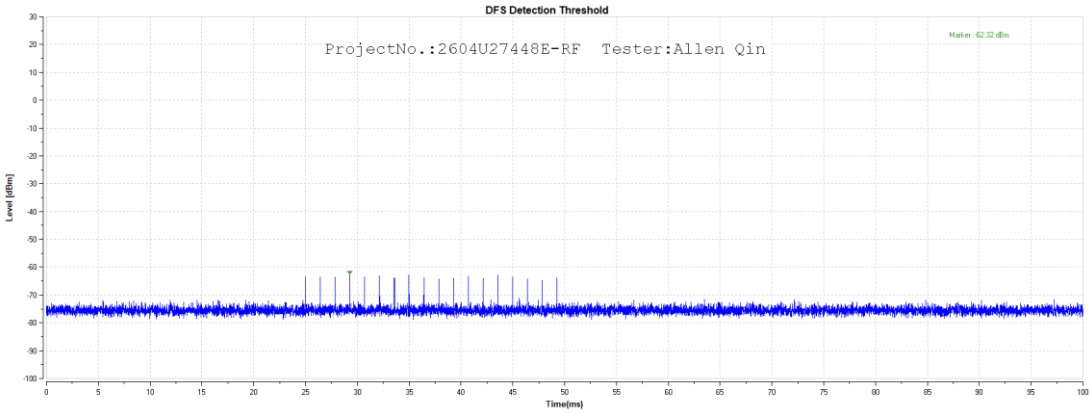

5510_Type0
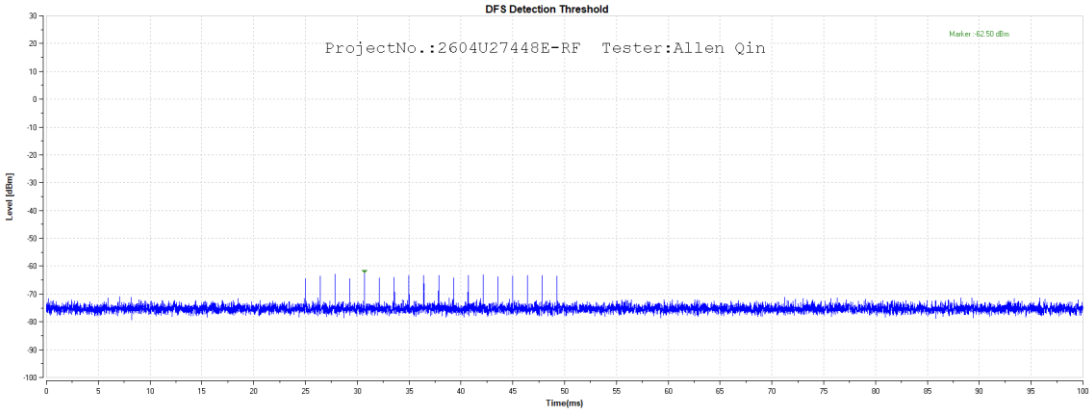

Appendix B: Channel Move Time and Channel Closing Transmission Time

Test Result

Test Mode	Frequency[MHz]	CCTT[ms]	Limit[ms]	CMT[ms]	Limit[ms]	Verdict
11AX20SISO	5260	200+3.9	200+60	477.1	10000	PASS
	5500	200+3.9	200+60	440.6	10000	PASS
11AX40SISO	5270	200+5.2	200+60	490.1	10000	PASS
	5510	200+3.9	200+60	447.1	10000	PASS

Test Graphs

11AX20SISO_5260

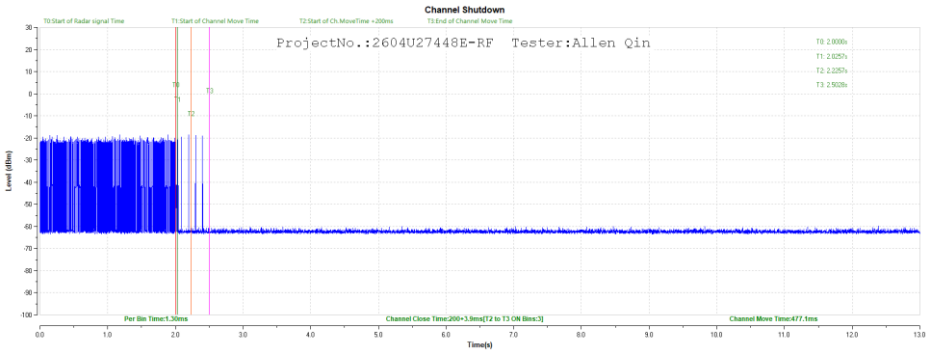

11AX20SISO_5500

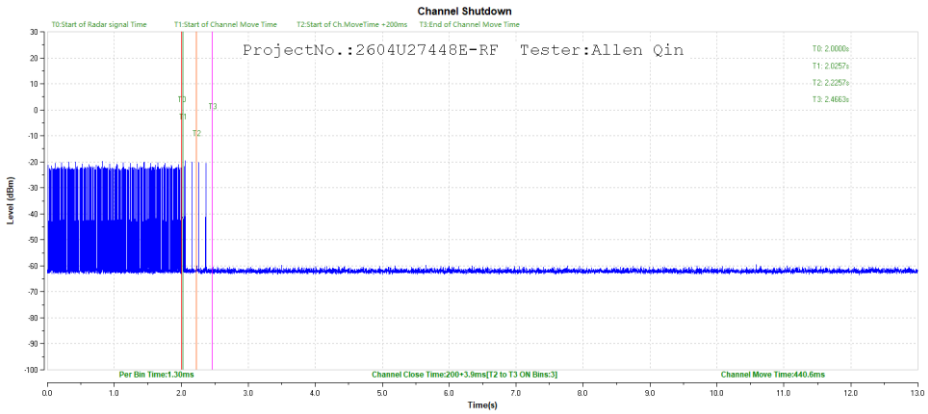

11AX40SISO_5270
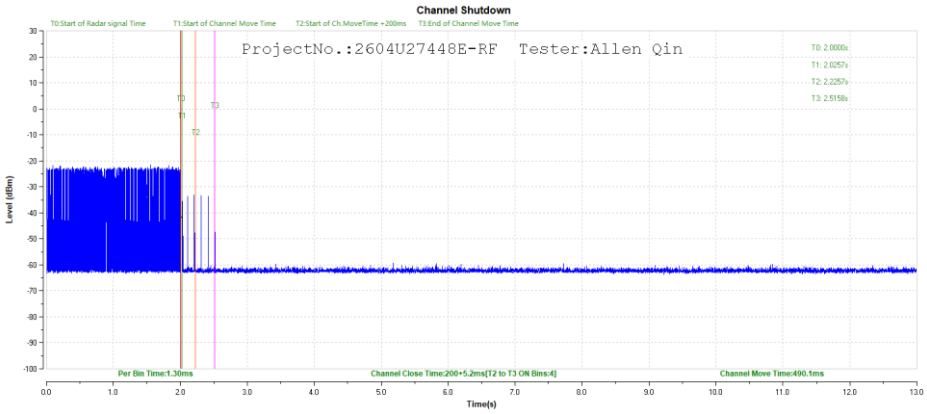

11AX40SISO_5510
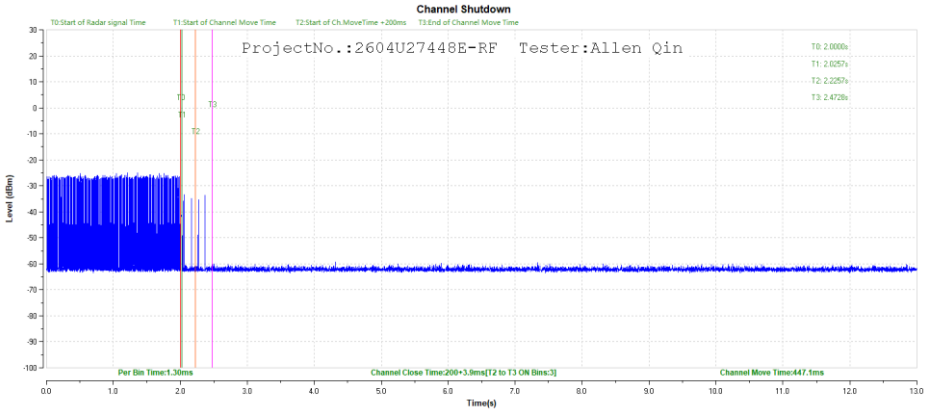

Appendix C: Non-Occupancy Period

Test Result

Test Mode	Frequency[MHz]	Result	Limit[s]	Verdict
11AX20SISO	5260	see test graph	≥1800	PASS
	5500	see test graph	≥1800	PASS
11AX40SISO	5270	see test graph	≥1800	PASS
	5510	see test graph	≥1800	PASS

Test Graphs

11AX20SISO_5260

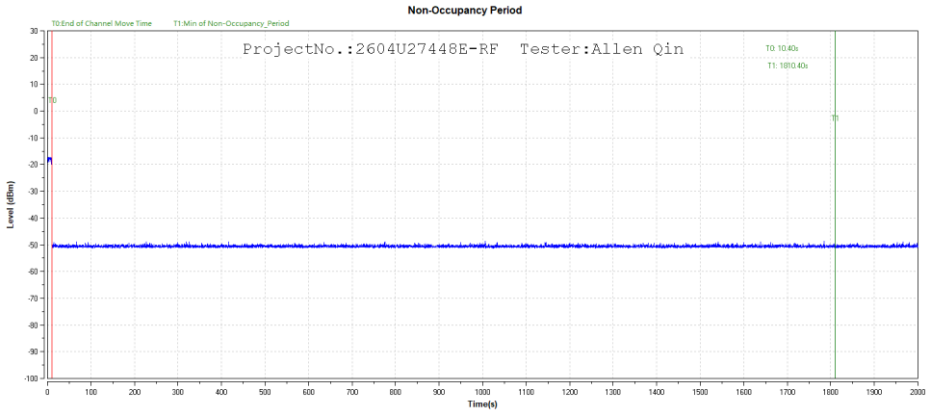

11AX20SISO_5500

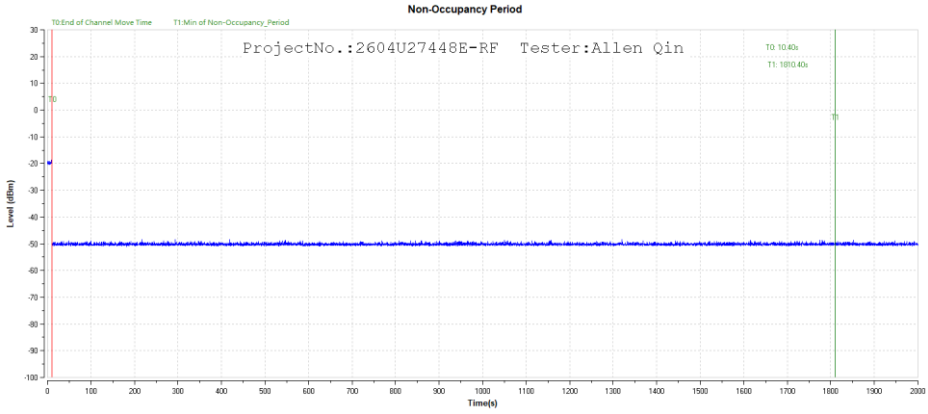

11AX40SISO_5270
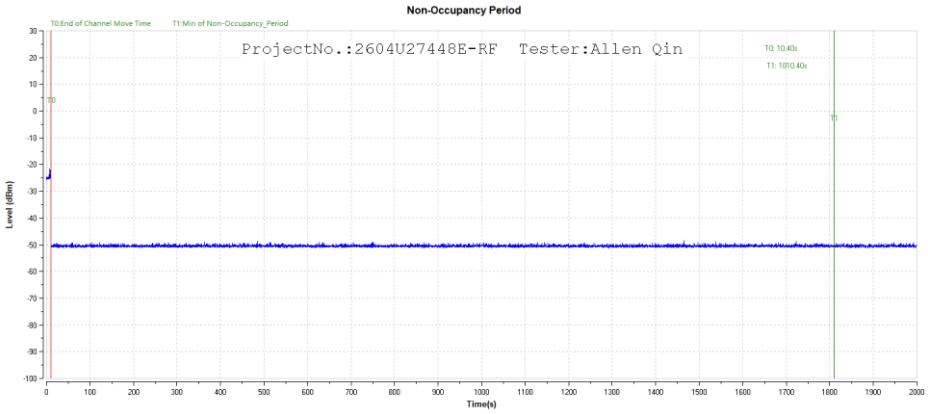

11AX40SISO_5510
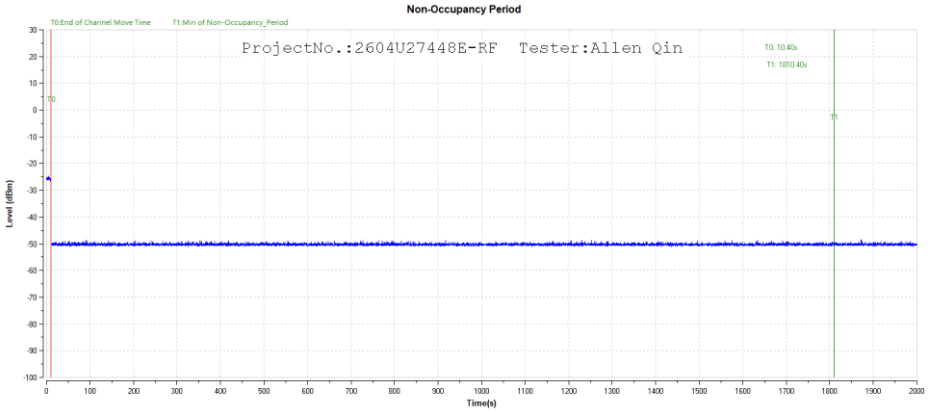

EXHIBIT A-EUT PHOTOGRAPHS

Please refer to the Attachment No.1 2604U27448E-RF EUT External Photos and Attachment No.2 2604U27448E-RF EUT Internal Photos.

EXHIBIT B-TEST SETUP PHOTOGRAPHS

Please refer to the Attachment No.4 2604U27448E-RFE Test Photos.

******* END OF REPORT *******