Grandstream Networks, Inc.

GVC3200 Video Conferencing System for Android™

User Guide

GVC3200 User Guide

Index

CHANGE LOG..... 8

FIRMWARE VERSION 1.0.0.X..... 8

WELCOME.....9

PRODUCT OVERVIEW.....11

FEATURE HIGHTLIGHTS..... 11
SAFETY COMPLIANCES.....13
WARRANTY.....13

INSTALLING GVC3200.....14

EQUIPMENT PACKAGE CONTENT..... 14
CONNECTING GVC3200.....14

GETTING TO KNOW GVC3200..... 19

REMOTE CONTROL.....19
USING THE REMOTE CONTROL.....21
PAIRING AND CONNECTING THE REMOTE CONTROL.....22
USING MOUSE & KEYBOARD.....22
OLED SCREEN.....23
USING THE LED INDICATOR.....23
STATUS ICONS..... 23
USING THE ONSCREEN KEYBOARD..... 24
ENGLISH KEYBOARD..... 24
NUMBERS AND SYMBOLS..... 25
HOME SCREEN.....25

CONNECTING TO NETWORK AND DEVICES.....27

ETHERNET.....27
WI-FI.....27
TURNING WI-FI ON OR OFF..... 28
BLUETOOTH.....28
TURNING BLUETOOTH ON OR OFF..... 28
PAIRING GXV3200 WITH A BLUETOOTH DEVICE..... 28
CONNECTING TO A BLUETOOTH DEVICE..... 29
USING BLUETOOTH REMOTE CONTROL..... 29

TRANSFER FILES WITH BLUETOOTH.....30
USING BLUETOOTH HEADSET.....30
VPN SETTINGS.....30
VLAN SETTINGS.....32
LLDP SETTINGS.....32
802.1X MODE.....33

CAMERA.....34

PRESET.....34
ADD/EDIT PRESET.....34
DELETE PRESET.....35
APPLY PRESET.....35
CAMERA PARAMETERS CONFIGURATIONS.....35

PERIPHERAL.....38

EXTERNAL USB DEVICE.....38
USING USB MOUSE/KEYBOARD.....38
USING USB STORAGE DEVICE.....38
SD CARD.....38
MICROPHONE AND SPEAKER.....39

MAKING PHONE CALLS.....40

ACCOUNT.....40
DIAL SCREEN.....40
DIALING A NUMBER DIRECTLY.....41
REDIAL.....41
DIALING A NUMBER VIA CONTACT.....41
DIALING A NUMBER VIA CALL HISTORY.....42
DIRECT IP CALL.....42
PAGING/INTERCOM.....42
ANSWERING A CALL.....43
SINGLE INCOMING CALL.....43
MULTIPLE CALLS/CALL WAITING.....43
SWITCHING LINES DUING CALL.....43
CALL HOLD.....44
CALL TRANFER.....44
BLIND TRANSFER.....44
AUTO-ATTENDED TRANSFER.....44
ATTENDED TRANSFER.....45
MUTE.....45
CALL RECORDING.....45

DND (DO NOT DISTURB)....45
MISSED CALL....46
CALL FORWARD....46
CONFERENCE....46
LAYOUT....*46*
INITIATING CONFERENCE....*46*
ANSWERING AN INCOMING CALL IN CONFERENCE....*46*
CONFERENCE MANAGEMENT....*47*
END CONFERENCE....*53*
SCHEDULE....53
VIEW CONFERENCE DETAILS....*54*
ADD SCHEDULED CONFERENCE....*55*
EDIT SCHEDULED CONFERENCE....*56*
RESCHEDULE CONFERENCE....*56*
DELETE SCHEDULED CONFERENCE....*56*
VOICEMAIL....56

OTHER FUNCTIONS....58

REMOTE CONTROL APPLICATION....58
BLUEJEANS....59

APPLICATIONS....60

CONTACTS....60
ADD CONTACT....*61*
SEARCH CONTACTS....*63*
MANAGE CONTACTS....*64*
GROUPS....*65*
CALL HISTORY....66
ADD CONTACT FROM CALL HISTORY....*67*
DELETE CALL HISTORY....*68*
FILEMANAGER....68
COPY FILE....*68*
SEND FILE....*69*
DELETE FILE....*69*
RENAME FILE....*69*
ECORDING....69
BACKUP....70
BACKUP DATA....*70*
RESTORE BACKUP....*72*
SET BACKUP PATH....*72*
DIAGNOSIS....72

BROWSER....73
CUSTOM APP ON HOME SCREEN....73
UNINSTALL APPLICATION....73

GS MARKET....75

SEARCH APPS....75
DOWNLOAD AND INSTALL APPS....75
UPDATE APPS....75

GVC3200 WEB UI FEATURES....76

ACCESSING GVC3200 WEB GUI....76
SAVING CHANGES....76
DEFINITIONS....77
TOOLBAR....77
CALL PAGE....78
MAKING A CALL....78
CONFERENCE CONTROL....78
CONTACTS PAGE....79
CONTACTS....79
GROUPS....80
SCHEDULE....81
CALL HISTORY....82
DEVICE CONTROL PAGE....83
VIDEO CONTROL....83
AUDIO CONTROL....84

EXPERIENCING GVC3200....86

Table of Tables

GVC3200 User Guide

Table 1 GVC3200 Technical Specifications....11
Table 2 GVC3200 Package List....14
Table 3 GVC3200 Front Panel....15
Table 4 GVC3200 Back Panel....15
Table 5 GVC3200 Optional Equipment List....16
Table 6 GVC3200 Remote Control Keys....19
Table 7 GVC3200 OLED Screen Status Descriptions....23
Table 8 GVC3200 LED Indicator Status Descriptions....23
Table 9 GVC3200 Status Icons Descriptions....23
Table 10 GVC3200 VPN File Parameters....32
Table 11 GVC3200 VLAN Configuration Parameters....32
Table 12 GVC3200 LLDP Configuration Parameters....32
Table 13 GVC3200 802.1X Mode Parameters....33
Table 14 GVC3200 Camera Parameters....36
Table 15 GVC3200 Conference Member Status Descriptions....48
Table 16 Add Conference Parameters....56
Table 17 GVC3200 Import Contacts Parameters....62
Table 18 GVC3200 Download Contacts Parameters....63
Table 19 GVC3200 Export Contacts Parameters....64
Table 20 GVC3200 WEB ACCESS....77
Table 21 GVC3200 Web UI - Audio Control Parameters....84

Table of Figures

GVC3200 User Guide

Figure 1 GVC3200 Front Panel 15
Figure 2 GVC3200 Back Panel 15
Figure 3 GVC3200 Back Panel Connection Diagram 18
Figure 4 Deploy Multiple GVC3200s with Other Devices 18
Figure 5 GVC3200 Remote Control 19
Figure 6 GVC3200 Soft Keyboard - English Input Method 24
Figure 7 GVC3200 English Input Method - Capslock 25
Figure 8 GVC3200 Soft Keyboard - Symbols and Numbers 25
Figure 9 GVC3200 Soft Keyboard - More Symbols and Numbers 25
Figure 10 GVC3200 Home Screen 26
Figure 11 GVC3200 Add Wi-Fi Screen 28
Figure 12 GVC300 Bluetooth - Paired Device 29
Figure 13 Always Ring Internal Ringer 30
Figure 14 GVC3200 Add VPN Files Screen 31
Figure 15 GVC3200 VPN Validation Screen 31
Figure 16 GVC3200 Camera Screen 34
Figure 17 GVC3200 Add Preset Screen 35
Figure 18 GVC3200 Camera Parameters Setting Screen 36
Figure 19 GVC3200 SIP Account 40
Figure 20 GVC3200 Call Screen 41
Figure 21 GVC3200 Multiple Incoming Calls 43
Figure 22 GVC3200 3-Way Conference 47
Figure 23 Conference Control Screen 49
Figure 24 GVC3200 3-Way Conference with Presentation 50
Figure 25 GVC3200 Call Details Screen 52
Figure 26 GVC3200 Schedule Screen 54
Figure 27 Conference Details Screen 55
Figure 28 GVC3200 Add Conference Screen 55
Figure 29 GVC3200 Voice Mail Application 57
Figure 30 GVC3200 Remote Control Application on Android Device 58
Figure 31 GVC3200 Contacts Screen 60
Figure 32 GVC3200 Add New Contact Screen 61
Figure 33 GVC3200 Import Contacts Screen 62
Figure 34 GVC3200 Download Contacts Screen 63
Figure 35 GVC3200 Export Contacts Screen 64
Figure 36 Groups Screen 65
Figure 37 GVC3200 Add Group Screen 66
Figure 38 GVC3200 Call History Screen 67
Figure 39 GVC3200 Add Contact Screen 68

Figure 40 Video Screen 70
Figure 41 Backup Screen 71
Figure 42 Auto Backup Screen 71
Figure 43 Restore Backup Screen 72
Figure 44 GVC3200 Diagnosis Screen 73
Figure 45 GVC3200 GS Market 75
Figure 46 GVC3200 Web GUI - Login 76
Figure 47 GVC3200 Web UI Tool Bar 77
Figure 48 GVC3200 Web UI - Call 78
Figure 49 GVC3200 Web UI - Conference Control 79
Figure 50 GVC3200 Web UI - Contacts 80
Figure 51 GVC3200 Web UI - Groups 81
Figure 52 GVC3200 Web Page—Schedule 82
Figure 53 GVC3200 Web UI - Call History 83
Figure 54 GVC3200 Web UI - Video Control 84

CHANGE LOG

This section documents significant changes from previous versions of GVC3200 user manuals. Only major new features or major document updates are listed here. Minor updates for corrections or editing are not documented here.

FIRMWARE VERSION 1.0.0.X

- This is the initial version.

WELCOME

Thank you for purchasing Grandstream GVC3200 Android ™ Video Conferencing System. This User Guide describes the basic concept and tasks necessary to use and configure your GVC3200. This document covers the topics of conference environment setups, start conference and the relevant operations like conference reservation. To learn the advanced features and configurations, please visit http://www.grandstream.com to download the latest "GVC3200 Administration Guide".

The GVC3200 is a ground-breaking solution that offers businesses of all sizes a revolutionary video conferencing system with unprecedented flexibility and the power of support for multiple popular video conferencing protocols and platforms right out of the box. Based on Android 4.4 ™, the GVC3200 offers full access to all video conferencing apps in the Google Play Store - such as Skype™, Skype for Business ™, Google Hangouts ™ and more - in addition to Grandstream's industry leading SIP-based video conferencing platform. The GVC3200 supports an innovative, patent pending embedded MCU that supports up to 9-way conferencing with local mixing between SIP and other protocols. It is also compatible with a number of 3rd party video conferencing solutions (including Cisco, Polycom, Huawei, Broadsoft, Blue Jeans and etc.). The GVC3200 sets a new bar for enterprise class video conferencing solution in terms of flexibility, interoperability, system openness, application richness and ease of use in the modern Internet age.

⚠Caution:

Changes or modifications to this product not expressly approved by Grandstream, or operation of this product in any way other than as detailed by this User Manual, could void your manufacturer warranty.

⚠Warning:

Please do not use a different power adaptor with the GVC3200 as it may cause damage to the products and void the manufacturer warranty.

This document is subject to change without notice. The latest electronic version of this user manual is available for download here:
http://www.grandstream.com/support
Reproduction or transmittal of the entire or any part, in any form or by any means, electronic or print, for any purpose without the express written permission of Grandstream Networks, Inc. is not permitted.

⚠FCC Caution:

Any Changes or modifications not expressly approved by the party responsible for compliance could void the user's authority to operate the equipment. This device complies with part 15 of the FCC Rules.

Operation is subject to the following two conditions: (1) This device may not cause harmful interference, and (2) this device must accept any interference received, including interference that may cause undesired operation.

Note: This equipment has been tested and found to comply with the limits for a Class B digital device, pursuant to part 15 of the FCC Rules. These limits are designed to provide reasonable protection against harmful interference in a residential installation. This equipment generates uses and can radiate radio frequency energy and, if not installed and used in accordance with the instructions, may cause harmful interference to radio communications. However, there is no guarantee that interference will not occur in a particular installation. If this equipment does cause harmful interference to radio or television reception, which can be determined by turning the equipment off and on, the user is encouraged to try to correct the interference by one or more of the following measures:

—Reorient or relocate the receiving antenna.
— Increase the separation between the equipment and receiver.
—Connect the equipment into an outlet on a circuit different from that to which the receiver is connected.
—Consult the dealer or an experienced radio/TV technician for help.

This transmitter must not be co-located or operating in conjunction with any other antenna or transmitter.
For operation within 5.15 ~ 5.25GHz / 5.47 ~5.725GHz frequency range, it is restricted to indoor environment. The band from 5600-5650MHz will be disabled by the software during the manufacturing and cannot be changed by the end user. This device meets all the other requirements specified in Part 15E, Section 15.407 of the FCC Rules.
Radiation Exposure Statement:
This equipment complies with FCC radiation exposure limits set forth for an uncontrolled environment. This equipment should be installed and operated with minimum distance 20cm between the radiator & your body.

PRODUCT OVERVIEW

FEATURE HIGHTLIGHTS

- Runs Android™ 4.4 and offers full access to all video conferencing apps in the Google Play Store (such as Skype™, Microsoft Lync™, Google Hangout™, etc.)
- Proprietary, patent pending embedded MCU supports up to 4-way 1080p Full HD (or 5-way 720p HD, or 9-way VGA) video conferencing, collaborative sharing of computer screen at 1080p resolution, and cross-protocol local conference mixing between SIP and any other Android™ video conferencing apps (e.g., Skype™, Microsoft Lync™, Google Hangouts™, etc.)
- 3 x HDMI output, 1x VGA/HDMI input
- Remote-controllable wide-angle PTZ camera with 12 x optical zoom, Bluetooth-based multi-touch remote control
- State-of-the-art H.264 High Profile video compression and FEC (Forward Error Correction) technology to ensure high resolution stunning video quality using low-to-modest bandwidth (e.g., 512kbps)
- FPGA based hardware implementation of advanced ISP (Image Signal Processing - including auto-focus, auto exposure, auto white balance, noise reduction, wide dynamic range, etc.) technology
- Interoperable with 3rd party SIP-based video conferencing solutions (such as Cisco, Polycom, and Huawei) using BFCP and TIP
- Integrated dual-band Wi-Fi, integrated Bluetooth 4.0, Gigabit network port, SD interface (for local recording)

Table 1 GVC3200 Technical Specifications

Specification	Description
Protocols/ Standards	SIP RFC3261, BFCP, TIP (pending), RTP/RTCP, HTTP/HTTPS, ARP, ICMP, DNS (A record, SRV, NAPTR), DHCP, PPPoE, SSH, TFTP, NTP, STUN, LLDP-MED, LDAP (pending), TR-069, 802.1x, TLS, SRTP, TCP/IP/UDP, IPv6 (pending), FEC, FECC
Camera	1/3” 2 Megapixel CMOS 1920Hx1080V@30fps
Lens	12x optical zoom, +/-23° tilt, +/- 90° pan, 70°(W)*- 6.3° (T) field of view
Network Interface	1× RJ45 10/ 100/ 1000 Mbps port
Wi-Fi	Yes, integrated dual-band 802.11 a/b/g/n (2.4GHz & 5GHz)
Bluetooth	Yes, integrated. Bluetooth 4.0 + EDR
Video Outputs	3x HDMI 1.4 up to 1080p with CEC
Video Input	1x VGA/1x HDMI 1.4 with resolution up to 1080p
Microphone/ Speaker	External MIC/Speaker, built-in MIC, cascadable external MIC/speaker (pending)

Remote Control	Bluetooth remote control with multi-touch touchpad
Auxiliary Ports	1x USB 2.0, SD, external speaker port, reset pin
Graphic Display	Graphic Display with 128x32 resolution
Voice Codecs	G.711μ/a, G.722 (wide-band), G.726-32, iLBC (pending), Opus, G.722.1, G.722.1c (pending), in-band and out-of-band DTMF (In audio, RFC2833, SIP INFO)
Video Codecs	H.264 BP/MP/HP, video resolution up to 1080p, frame rate up to 30 fps, bitrate up to 4Mbps
People Video Resolution	1080p from 512 Kbps, 720p from 384 Kbps, 4SIF/4CIF from 128 Kbps, SIF/CIF/QSIF/QCIF/SQSIF/SQCIF from 64 Kbps
Content Video Resolution	Input: VGA, SVGA, XGA, WXGA, WXGA, SXGA, 1440×900, 720p, 1600×1200, 1080p (HDMI), up to 60fps; Encoding: 1280×720, 1920×1080
Output Resolution	720p, 1080p
Embedded MCU	Up to 4-way 1080p conference, 5-way 720p conference, 9-way VGA conference
Dual-Stream	BFCP, people video (up to 1080p@30fps) + content video (up to 1080p@15fps, 720p@30fps)
Audio Features	AEC, ANS, AGC, PLC, CNG/VAD
Video Features	FEC, dynamic display layout, picture-in-picture, picture-outside-picture, digital caption (pending)
Platform Bridging	Bridge SIP calls with any Android™ VoIP apps such as Skyp™, MS Lync™, Google Hangouts™ and more
Telephony Features	Hold, transfer, forward (unconditional/no-answer/busy), call park/pickup, 9-way audio/video conference, downloadable XML phone book, LDAP (pending), call waiting, call history, flexible dial plan, personalized music ringtones, server redundancy & fail-over
Sample Applications	Skype™, Google Hangouts™, Skype™ for Business, Web browser, Facebook™, Twitter™, YouTube™, Google™ calendar, mobile phone data import/export via Bluetooth, etc. API/SDK available for advanced custom application
Application Deployment	Allows Android 4.4.2 compliant applications to be deployed in the device with provisioning control
QoS	Layer 2 QoS (802.1Q, 802.1p) and Layer 3 (ToS, DiffServ, MPLS) QoS
Security	User and administrator level passwords, MD5 and MD5-sess based authentication, 256-bit AES encrypted configuration file, TLS, 128/256-bit SRTP, HTTPS, 802.1x media access control
Multi-Language	English, German, Italian, French, Spanish, Portuguese, Russian, Croatian, Chinese, Korean, Japanese, and more
Upgrade/ Provisioning	Firmware upgrade via TFTP / HTTP / HTTPS or local HTTP upload, mass provisioning using TR-069 or AES encrypted XML configuration file
Power & Green Energy Efficiency	Universal power adapter included: Input 100-240VAC 50-60Hz; Output 12VDC/5A (60W)
Package Content	GVC3200 video conference system, external USB speaker/MIC, remote control,

	universal power supply, network cable (1.5 meters), USB extension cable (5 meters), mounting kit, 3 HDMI cables (two 1.5 meter cables and one 5 meter cable), quick installation guide, brochure, GPL license
Temperature and Humidity	Operation: 0°C to 40°C, Storage: -10°C to 60°C, Humidity: 10% to 90% Non-condensing
Compliance	FCC: Part 15 (CFR 47) Class B; UL 60950 (power adapter), Part 15C, Part 15E.407, Part 2.1091 CE: EN55022 Class B, EN55024, EN61000-3-2, EN61000-3-3, EN60950-1, EN62479, RoHS, EN301893, EN62311 RCM: AS/NZS CISPR22/24; AS/NZS 60950; AS/NZS 4268

SAFETY COMPLIANCES

The GVC3200 complies with FCC/CE, RCM and various safety standards. The GVC3200 power adapter is compliant with the UL standard. Use the universal power adapter provided with the GVC3200 package only. The manufacturer's warranty does not cover damages to the phone caused by unsupported power adapters.

WARRANTY

If the GVC3200 phone was purchased from a reseller, please contact the company where the device was purchased for replacement, repair or refund. If the phone was purchased directly from Grandstream, please contact Grandstream Support for a RMA (Return Materials Authorization) number before the product is returned. Grandstream reserves the right to remedy warranty policy without prior notification.

INSTALLING GVC3200

EQUIPMENT PACKAGE CONTENT

The GVC3200 package contains the following items:

Table 2 GVC3200 Package List

Name	Number
GVC3200 Main Case	1
External USB Speakerphone	1
Remote Control (No lithium battery)	1
12V Universal Power Adapter	1
Power Cable	1
1.5m Ethernet Cable	1
5m USB Extension Cable	1
3m HDMI Cable	2
1.5m HDMI Cable	1
Wall Mount Kit (including top bracket, bottom bracket and 1 Hook & Loop tapes)	1
Screws and bolts (4 screws and 4 bolts to install bracket to the wall, 2 screws to fix bracket, 2 screws for bracket)	12
Quick Installation Guide	1
GPL license	1

CONNECTING GVC3200

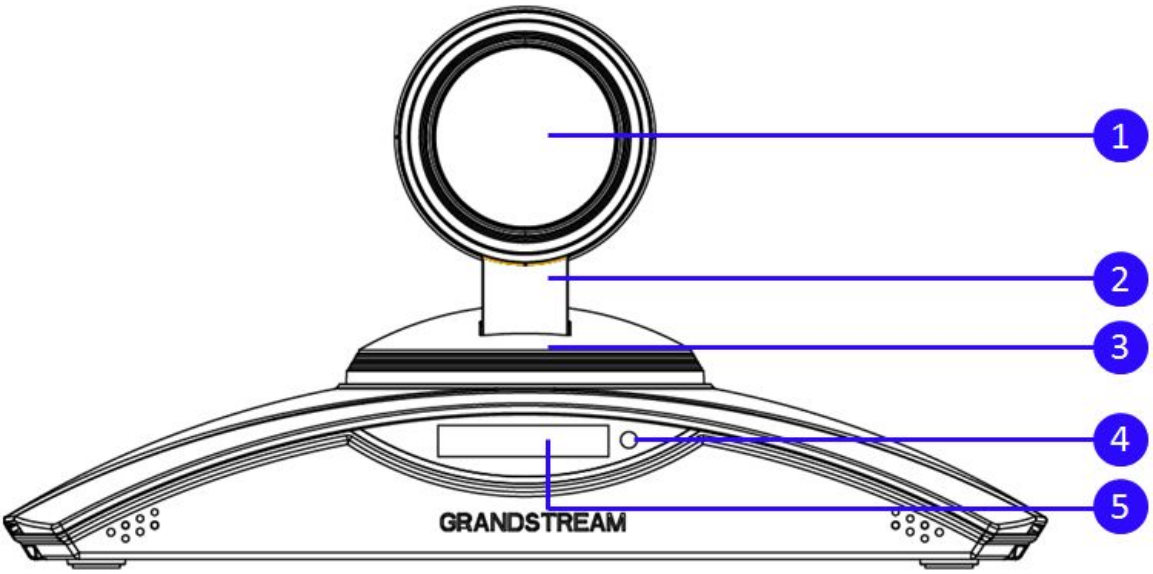

Figure 1 GVC3200 Front Panel

Table 3 GVC3200 Front Panel

NO.	Name	Explanation
①	**Camera**	1/3" 2 Megapixel CMOS 1920Hx1080V@30fps 70° (W)*- 6.3° (T) field of view
②	**Vertical Rotating Stent**	+/-23° tilt
③	**Horizontal Rotating Platform**	+/-90° pan
④	**LED Indicator**	Power on: Green Standby: Flash red Shutdown: Red Pressing any key on the remote control: Green light flashes once
⑤	**OLED Display**	Graphic display with 128x32 resolution to show device status

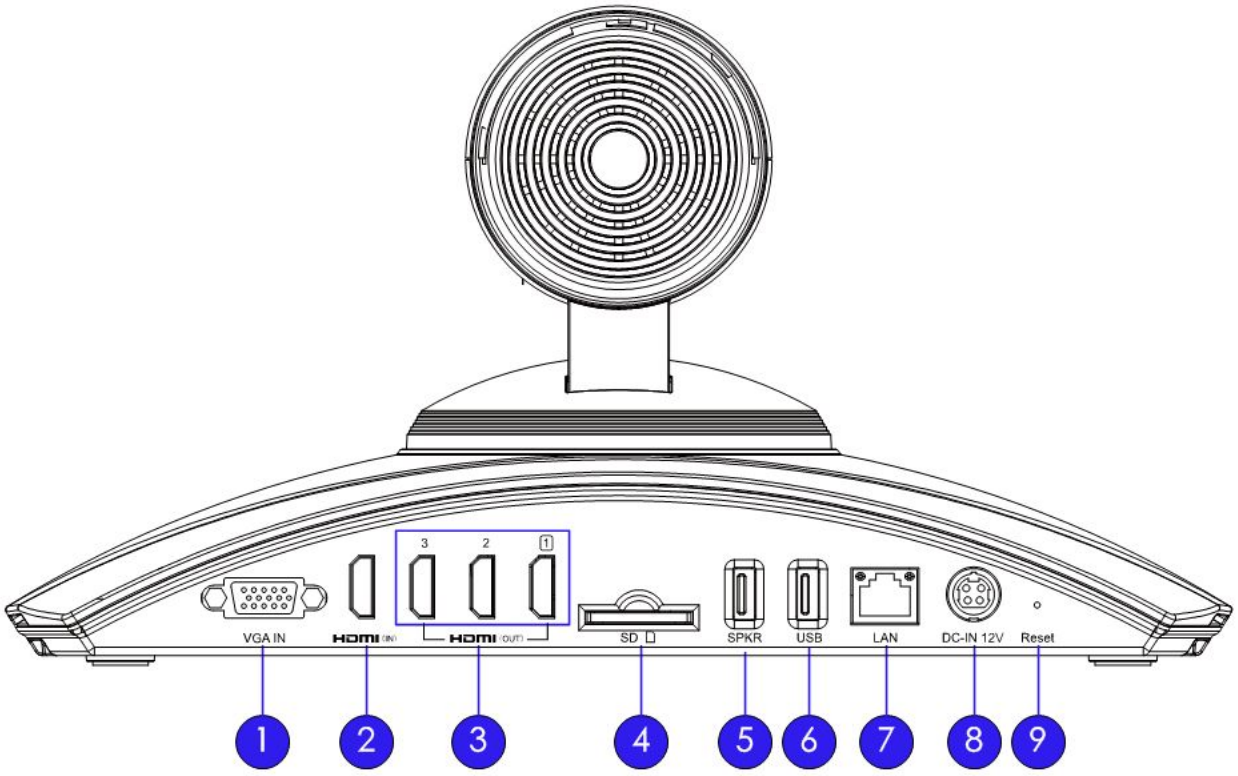

Figure 2 GVC3200 Back Panel

Table 4 GVC3200 Back Panel

NO.	Name	Explanation
①	**VGA Input Interface**	Connect to VGA input devices.

②	**HDMI Input Interface**	Connect to HDMI input devices. **Note:** The HDMI input interface has higher priority than the VGA interface when both are connected.
③	**HDMI Output Interface**	Connect to HDMI display devices. There are 3 HDMI output ports. And the interface marked with number "1" is the primary interface to output primary video. Please make sure to follow the port order when connecting HDMI port 1, 2 and 3. When there is only 1 HDMI output, it must use HDMI output 1. Connect HDMI port 2 and then HDMI port 3 if you have additional display devices. The GVC3200 will not work correctly if connecting HDMI port 2 or 3 without HDMI port 1 connected.
④	**SD Card Slot**	Insert SD card to store recording data and other necessary files.
⑤	**External USB Speaker/MIC Jack**	Connect to external speakerphone.
⑥	**USB Interface**	Connect to USB cable or USB storage device.
⑦	**Network Interface**	Connect to LAN port.
⑧	**Power Interface**	Connect to power adapter. The arrow indicator on the power adapter should face upwards when the power adapter is plugged in.
⑨	**Factory Restore**	• When the GVC3200 is powered up, use a small pin to press the button one time to reboot. • When powering up GVC3200, long press the button for 4 to 9 seconds to update system. • When powering up GVC3200, long press the button for more than 10 seconds to restore to factory settings.

To deploy a working video conferencing system, it is recommended for the users to prepare the following equipment based on your own requirement. The following table is for reference only.

Table 5 GVC3200 Optional Equipment List

Device Name	Number	Explanation
HDMI Display Device	1 (minimum), 2 or 3	To display video conference view. Being connected to HDMI output interface 1/2/3.
VGA Input	Optional	For presentation.
HDMI Input	Optional	For presentation. If both HDMI input and VGA input are plugged in, HDMI input will have high priority, meaning VGA input will not be displayed.
USB Mouse	Optional	It can be used to help navigate and operate the GVC3200 besides remote control. For example, when viewing a web page, USB mouse can be used to control the cursor.

USB Keyboard	Optional	It can be used to help input characters when operating the GVC3200 besides remote control. For example, typing in username and password to log in Skype app installed on GVC3200.

Please connect the GVC3200 according to the following procedures:

1. Connect the primary video output device (e.g., high-definition TV) to HDMI output interface 1 on GVC3200 with HDMI cable.
2. (Optional) Connect the second and third video output devices to HDMI output interface 2 and HDMI output interface 3 on GVC3200 with HDMI cable.
3. Connect input device (e.g., a laptop or GXV3275) to the GVC3200 VGA IN/HDMI IN port using VGA/HDMI cable.
4. Connect the external speakerphone to the USB speaker interface on the GVC3200.
5. Connect Ethernet cable from the LAN port of the GVC3200 to the RJ-45 socket of a hub/switch or a router (LAN side of the router) for network access. It is recommended to use Gigabit LAN to assure audio and video quality of video conference.
6. Plug in the power adapter into the power supply interface. The GVC3200 will power up.

Note:

For detailed instructions on installing the GVC3200 on wall mount and etc., please refer to the GVC3200 installation guide in www.grandstream.com.

A sample GVC3200 back panel connection is shown below.

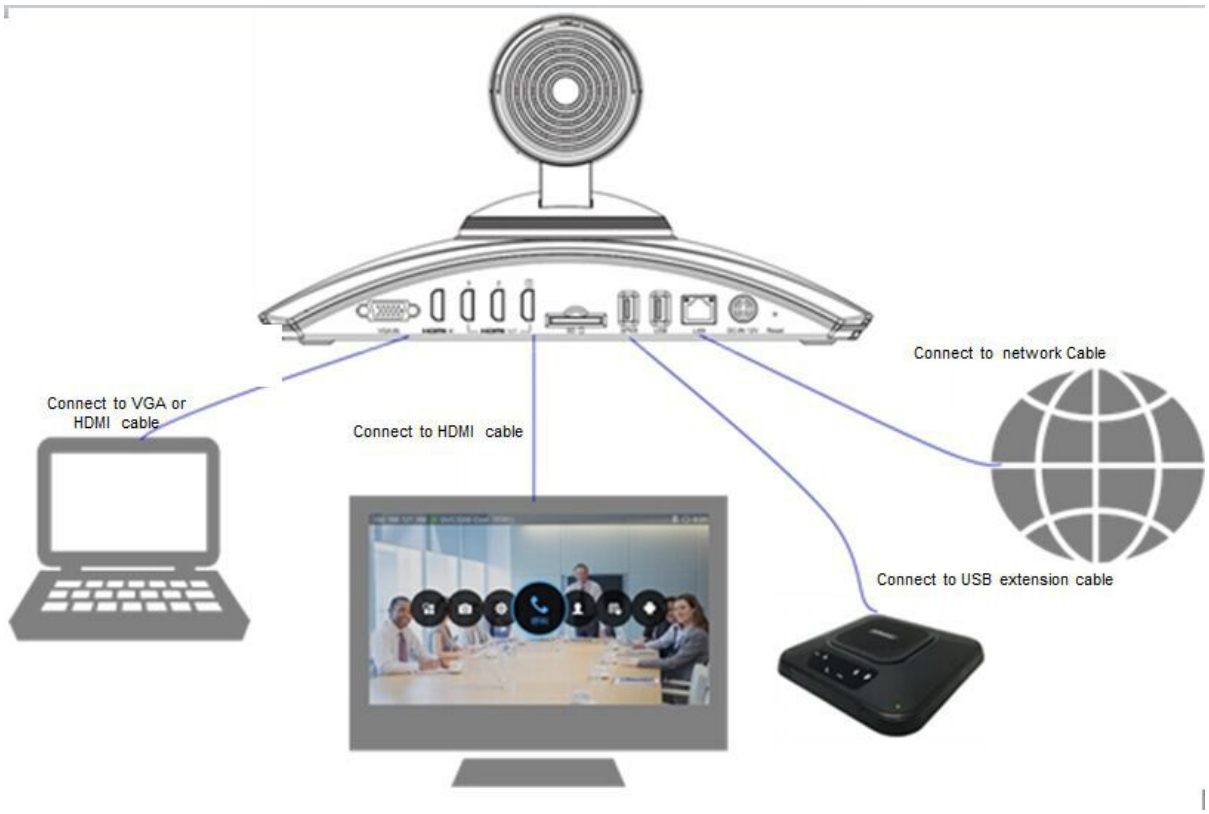

Figure 3 GVC3200 Back Panel Connection Diagram

The following diagram shows multiple GVC3200s deployed with other VoIP/network devices for video conference and collaboration.

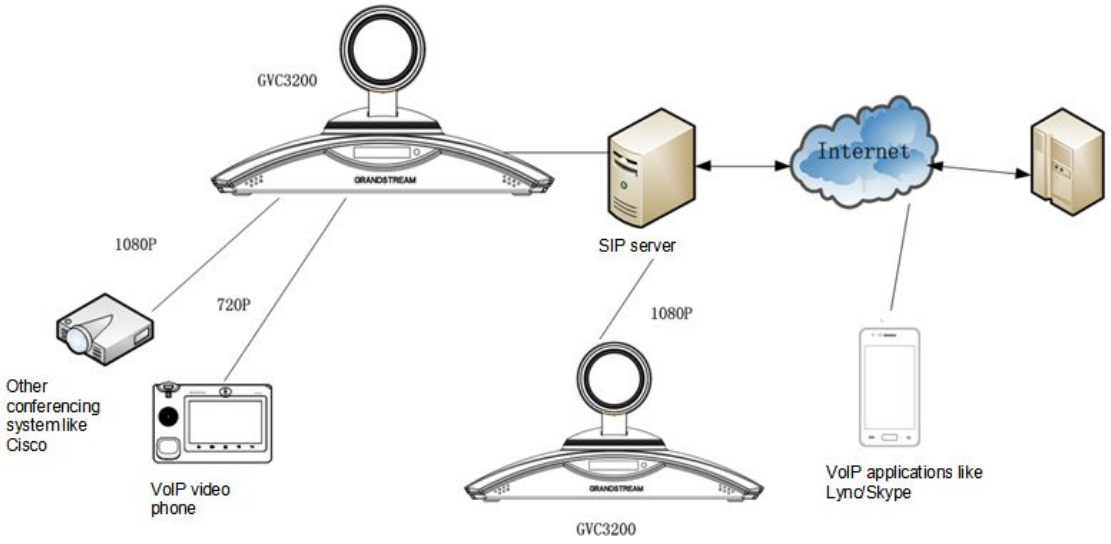

Figure 4 Deploy Multiple GVC3200s with Other Devices

GETTING TO KNOW GVC3200

REMOTE CONTROL

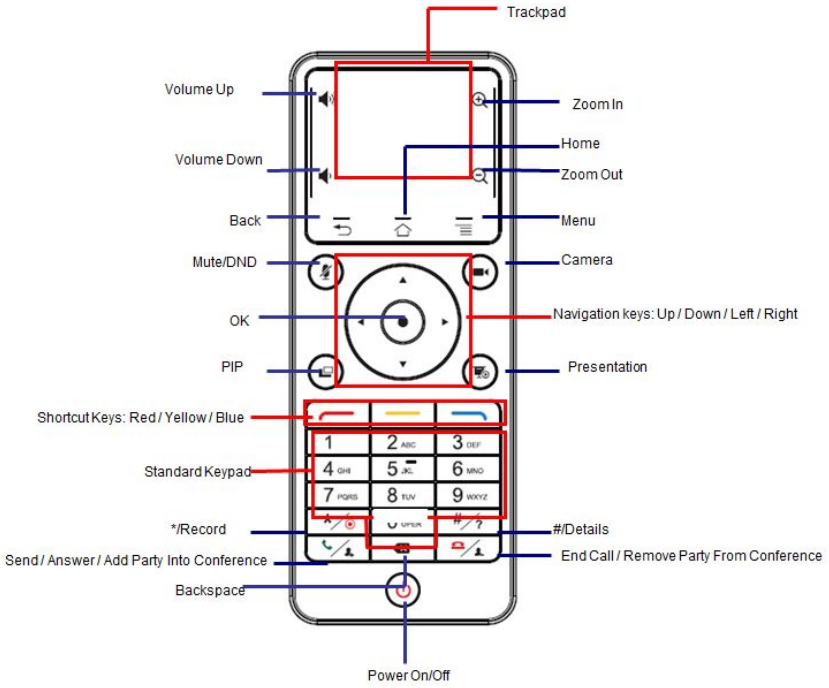

Figure 5 GVC3200 Remote Control

Table 6 GVC3200 Remote Control Keys

Icon	Name	Explanation
1, 2, 3, 4… 9	**Numeric Keys**	Input number 1-9 and letters. The letter input using numeric keys will not be displayed as letter but it can be used to search for contact in Call interface. For example, typing 5 (JKL), 6 (MNO), 4 (GHI), 6 (MNO) can look for John if existed in GVC3200 contacts.
	Camera	Switch to PTZ control mode.
	PIP	Switch screen layout in conference.
	Mute/DND	• Mute the GVC3200 in conference. • Press the MUTE key to enable/disable DND mode when the GVC3200 is in idle.
	Presentation	• Enable/disable presentation function to send presentation to all members in the conference. • Enable/disable presentation function to show presentation on displayer device which is connected to HDMI output 1 as projection when the GVC is in standby mode.

	Dial/Add Contact	• Access the dial screen by default when GVC is in standby mode. • Enter phone number and press the key to dial out. • Access the invite screen to add members in a conference. • Press the key to bring out the backstage conference.
	End Call/Remove Party from Conference	• Delete members in conference. • Hang up the conference.
	Backspace	Press the key to delete input characters.
	Navigation Keys: Up/Down/Left/Right	• Adjust cursor movement. • Control PTZ movement in camera mode.
	OK	• Confirm operations. • Bring up the soft keypad when the cursor is in an input box.
	Power On/Off	LCD prompt shows the following three optios upon pressing this key: • Put the GXV3200 into sleep mode. • Power Off. • Reboot.
*	*** / Record**	• Input * in input field. • Used as “.” when dialing direct IP call. e.g., 192.168.40.5. • Start/stop recording in camera control mode. • Start/stop recording in a call.
# ?	**# / Information**	• Input "#" in input field. • Used as “:” when dialing direct IP Cal e.g., 192.168.40.5:5060. • Input "#" on dialing screen to use it as REDIAL key. • Display call details on call screen during a call. • Display system status when the GVC3200 is idle.
	Shortcut Key: Red	Press each shortcut key for designated functions on different screen context. **Note**: Pressing the red and blue shortcut keys together for about 4 seconds will capture a screenshot of the LCD display.
	Shortcut Key: Yellow	
	Shortcut Key: Blue	
	Home	Press the key to go back to home screen.
	Menu	Press the key to view more options.
	Back	Press the key to go back to the previous screen or exit the current screen.
	Volume -	Turn down the device volume.
	Volume +	Turn up the device volume.

	Zoom In	Zoom in screen or adjust close focus.
	Zoom Out	Zoom out screen or adjust distant focus.
Trackpad		• Slide on the trackpad to move the mouse cursor. • Press the trackpad to confirm operations. • Using two fingers to press on the trackpad and slide up/down for page up/down.

USING THE REMOTE CONTROL

The remote control is connected to the GVC3200 via Bluetooth and it's already pre-paired when the user receives the GVC3200 package. Before using the remote control, please make sure:

1. A pair of AAA batteries is correctly installed on the back of the remote control.
2. The remote control needs to be placed within the Bluetooth effective range, i.e., 10m from the GVC3200.

After powering up the GVC3200, Pressing the "OK" key on the remote control will initiate connection and the remote control can be used right away.

If the GVC3200 is in idle and the remote control is not connected anymore, users will see the remote control icon in the top status bar in grey . In this case, press the "OK" key on the remote control to initiate the connection again. LCD will prompt "The remote control is connected" and the remote control icon in top status bar will light up again .

If the remote control fails to pair and connect to the GVC3200, the remote control icon shows as in the top status bar. Please follow the steps below to troubleshoot:

1. Connect a USB mouse or use the virtual remote control in GVC3200 web UI to navigate in the LCD display device connected to the GVC3200;
2. Go to Settings->Network->Bluetooth, select and click on "Search For Devices";
3. On the remote control, Press "OK" and digit 5 keys at the same time for about 5 seconds. Check if the remote control device is displayed as "GS-RCU" followed by the last 4 digits of the remote control MAC address under "Available Devices";
4. If the remote control is not displayed under "Available Devices" in step 3, check the batteries in the remote control and try pairing process again:
   - Check the battery polarity when placed into the battery case. Make sure the batteries are placed in the correct direction in the remote control.
   - Check the battery power.
5. If the remote control still can't function beyond the above situations, please change a remote control and try again, or contact the device provider.

PAIRING AND CONNECTING THE REMOTE CONTROL

If the user happens to factory reset the GVC3200, the remote control will not be paired to the GVC3200 anymore. Or, if in any other instance that the remote control is not paired with the GVC3200 anymore, please follow the steps below to re-pair and connect the remote control to the GVC3200:

1. Connect a USB mouse or use the virtual remote control in the GVC3200 web UI to navigate in LCD screen->Settings->Network->Bluetooth.
2. Select and click on “Search For Devices”.
3. On the remote control, press "OK" and digit 5 keys at the same time for about 5 seconds.
4. Users shall see “GS-RCU” followed by the last 4 digits of the remote control MAC address under “Available Devices”.
5. The pairing and connecting process will be triggered.
6. Once connected, the remote control icon in the top status bar will light up .

Note:

1. Please use the proprietary factory remote control that comes with the GVC3200.
2. The GVC3200 could connect to multiple remote controls, but only one remote control at a time. Factory reset might be required for your GVC3200 before pairing and connecting a remote control that belongs to another GVC3200.

USING MOUSE & KEYBOARD

When the USB mouse is plugged into the GVC3200, users could make the following operations with the mouse.

1. Single click the left key of the USB mouse to perform the following operations:
   - Access menu
   - Check in the checkbox or enable/disable an option
   - Bring up the drop-down list when clicking on a combo box.
   - Switch input methods in the input box, tap on the corresponding buttons on the soft keyboard to input characters. (Note: Pressing the left key of the USB mouse on in the soft keyboard for about 3 seconds can switch to “Always use upper case” in English input method.)
2. Single click the right key of the USB mouse to exit the current menu in the LCD display device. It will go back to the previous menu without saving the configurations.

OLED SCREEN

Table 7 GVC3200 OLED Screen Status Descriptions

OLED Screen Status	Descriptions
Booting	Display "BOOTING..." when the GVC3200 boots up.
IP	Display GVC3200 IP address. For example, IP: 192.168.40.5.
Call Status	Display "Ringing", "Calling", "Talking", "Call Waiting", "Missed Call", "New Voicemail" and etc.
Upgrade Status	• Display "New Version, Pls Reboot" when a new firmware version is detected. • Display "Upgrading" in the process of upgrading. • Display failure reason when upgrade fails. For example, "Incompatible Hardware", "Insufficient Space", "Same Version", etc.
Sleep Mode	Display "Standby".
Abnormal Status	Display abnormal status information. The hexadecimal error code will be displayed next to the abnormal status.

USING THE LED INDICATOR

The GVC3200 LED indicator is located next to the OLED. It can be used to notify the users with current status of the device. Please refer to the status description below.

Table 8 GVC3200 LED Indicator Status Descriptions

LED Indicator Status	Descriptions
Solid Green	Booting or the device is already booted up
Flash Red	Standby (Sleep Mode)
Solid Red	Shut down but powered on (power adapter is connected)
Green Flashing once	Key pressing on the remote control
OFF	Power off

STATUS ICONS

The GVC3200 status icons are displayed on the right side of top status bar on the GVC3200 LCD display device.

Table 9 GVC3200 Status Icons Descriptions

Icon	Descriptions	Icon	Descriptions	Icon	Descriptions
	Missed Call		Ongoing call		Auto answer is enabled
	Ethernet is connected		Ethernet is disconnected		Trying to connect to the Ethernet
	PPPoE is connected		PPPoE connection is failed		PPPoE is disconnected
	VLAN is successfully configured		VLAN is being configured		Unread voicemail
	VPN is connected		VPN connection is failed		Using third party applications
	External Bluetooth device is connected		Bluetooth is turned on but no external Bluetooth device is connected		DND mode is on
	Remote control is connected		Remote control is paired but not connected		Remote control is not paired
	SD Card is inserted		USB flash drive is inserted		Speaker is being used
	Call Recording storage is full		Contacts storage is full		SD card storage is full
	Wi-Fi is connected.		Wi-Fi is disconnected		Volume is turned to silent
	Call forward is set up		Wi-Fi Signal strength		Unknown Wi-Fi

USING THE ONSCREEN KEYBOARD

ENGLISH KEYBOARD

This is the default keyboard on the GVC3200. The GVC3200 English keyboard supports multiple languages input methods. Users could tap on to switch among different languages. See figure below.

Figure 6 GVC3200 Soft Keyboard - English Input Method

Tap on to switch CapsLock.

Figure 7 GVC3200 English Input Method - Capslock

NUMBERS AND SYMBOLS

To input number and symbols, tap on ?123 on the default keyboard to switch to numbers/symbols. Tap on ~ \ { for more numbers/symbols.

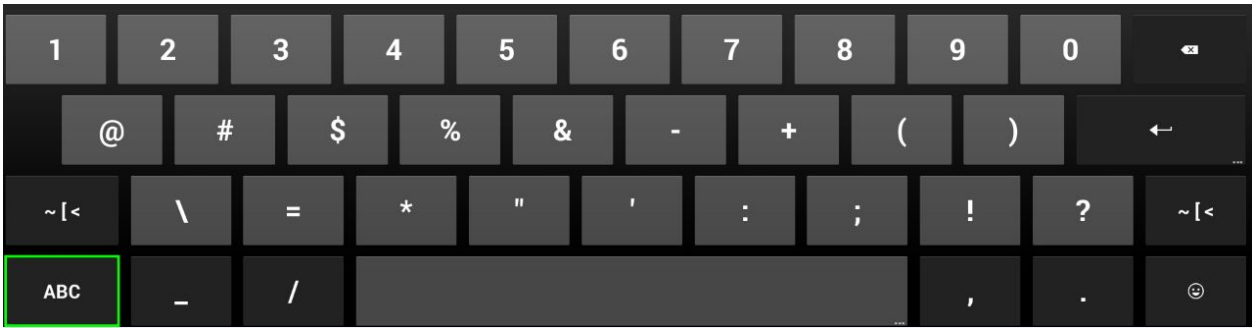

Figure 8 GVC3200 Soft Keyboard - Symbols and Numbers

Figure 9 GVC3200 Soft Keyboard - More Symbols and Numbers

HOME SCREEN

GVC3200 Home screen displays the icons for users to easily access applications, camera, schedule, call, contacts, settings and custom applications. Press the left/right keys on the remote control to navigate.

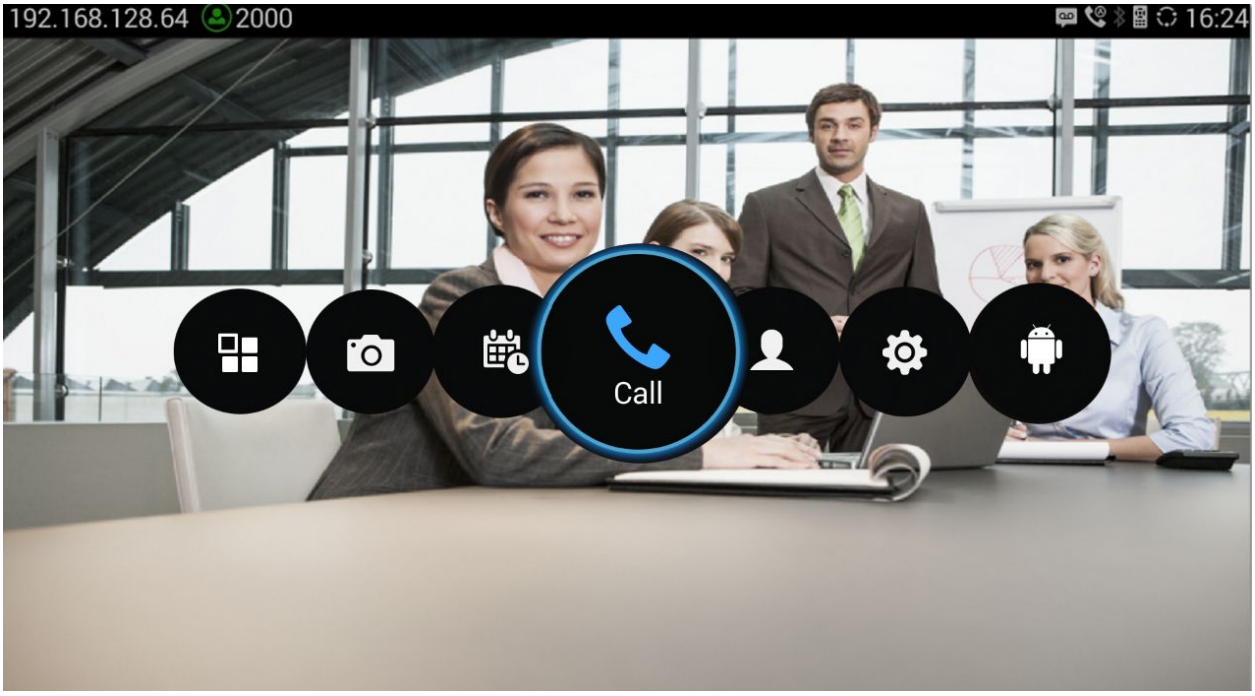

Figure 10 GVC3200 Home Screen

CONNECTING TO NETWORK AND DEVICES

The GVC3200 supports a variety of network connections (Ethernet, Wi-Fi) and device connections, including USB, SD card and Bluetooth device. For first-time users, please connect to USB mouse for configuration on device, or log in the GVC3200 web UI to use the virtual remote configuration. For more information about using web UI, please refer to the GVC3200 Administration Guide in www.grandstream.com .

ETHERNET

If you would like to use Ethernet connection for network access, you can plug the Ethernet cable to the LAN port on the back of the GVC3200. Ethernet connection is turned on as DHCP by default.

To configure Ethernet settings on GVC3200:

1. Plug the Ethernet cable into the LAN port on the back of the GVC3200.
2. Go to LCD menu->Settings->Network->Ethernet->IPv4 Settings.
3. Tap on "Address Type" to select DHCP, Static IP or PPPoE as the address type.
   - For DHCP, save the setting and the GVC3200 should be able to get IP address from the DHCP server in the network.
   - For static IP, enter IP Address, Subnet Mask, Default Gateway, DNS Server and Alternative DNS server for the GVC3200 to correctly connect to the network.
   - For PPPoE, enter PPPoE account ID and password so the GVC3200 can get IP address from the PPPoE server.

WI-FI

Wi-Fi is supported and built-in on the GVC3200. On the LCD display, go to Settings->Network-> Wi-Fi.

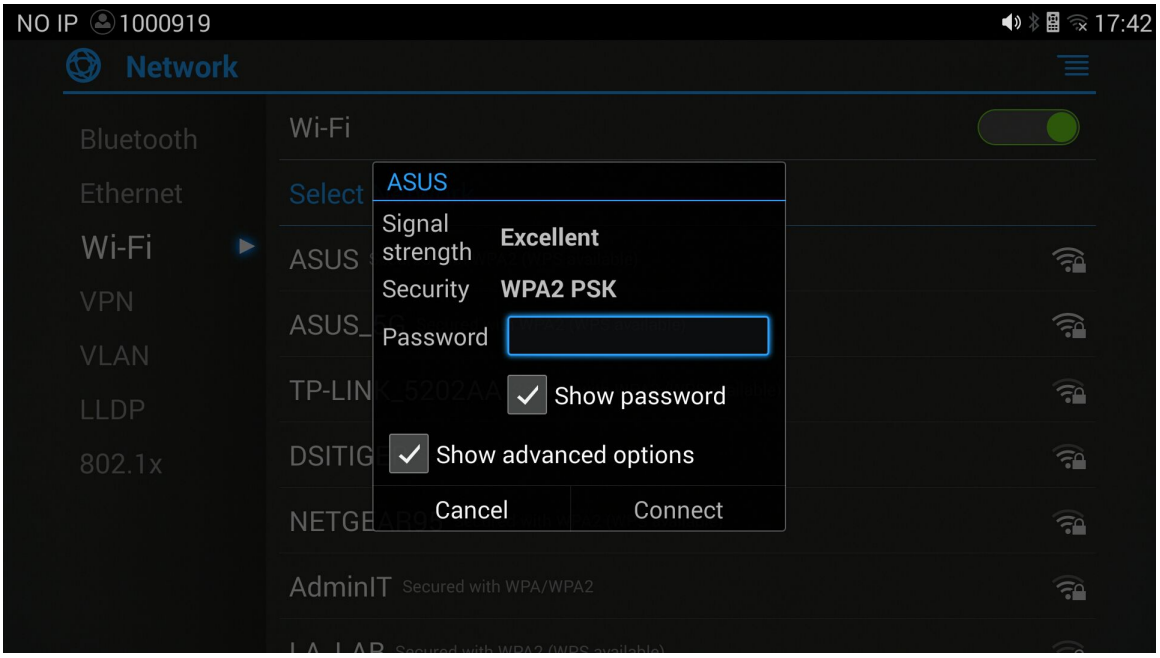

Figure 11 GVC3200 Add Wi-Fi Screen

TURNING WI-FI ON OR OFF

Once Wi-Fi is turned on, GVC3200 will automatically start the scanning within the range. A list of Wi-Fi networks will be displayed as scanning result. Tap on the SSID and enter the correct password information to connect to the selected Wi-Fi network.

Follow the steps below for static IP usage in Wi-Fi environment:

1. Tap on one Wi-Fi network in the scanned Wi-Fi list to bring up the dialog that shows signal strength, security, password and option “Show advanced options”.
2. Select “Show advanced options”. The dialog will show additional option “IP settings”.
3. In "IP settings", select Static IP, enter IP Address, Subnet Mask, and Default Gateway for the GVC3200 to correctly connect to the network.

BLUETOOTH

TURNING BLUETOOTH ON OR OFF

1. On the LCD display device, go to Settings->Network->Bluetooth.
2. Tap on the green switch next to the GVC3200 device on the top row to turn on/off Bluetooth. Please note the Bluetooth needs to be turned on in order to use the remote control.

PAIRING GXV3200 WITH A BLUETOOTH DEVICE

Before connecting GVC3200 with other Bluetooth device, users must pair them first. They will stay paired afterwards unless they are manually unpaired. To pair Bluetooth device:

1. On the LCD display device, go to Settings->Network->Bluetooth.

2. Press button on the remote control and select "Search for devices";
3. The GVC3200 scans and displays the IDs of all available Bluetooth devices in range. Once the Bluetooth device shows up in the result, tap on it to start pairing.
4. Confirm the passkey in the prompted message (if any). Or If passcode is required, please refer to the device's documentation or other procedures to obtain the passcode.

CONNECTING TO A BLUETOOTH DEVICE

After successfully paired, the device will be connected to the GVC3200 immediately. Users will see this device listed under “Paired Devices”. Tap on next to the connected device. Users will see options “Rename”, “Unpair” and etc.

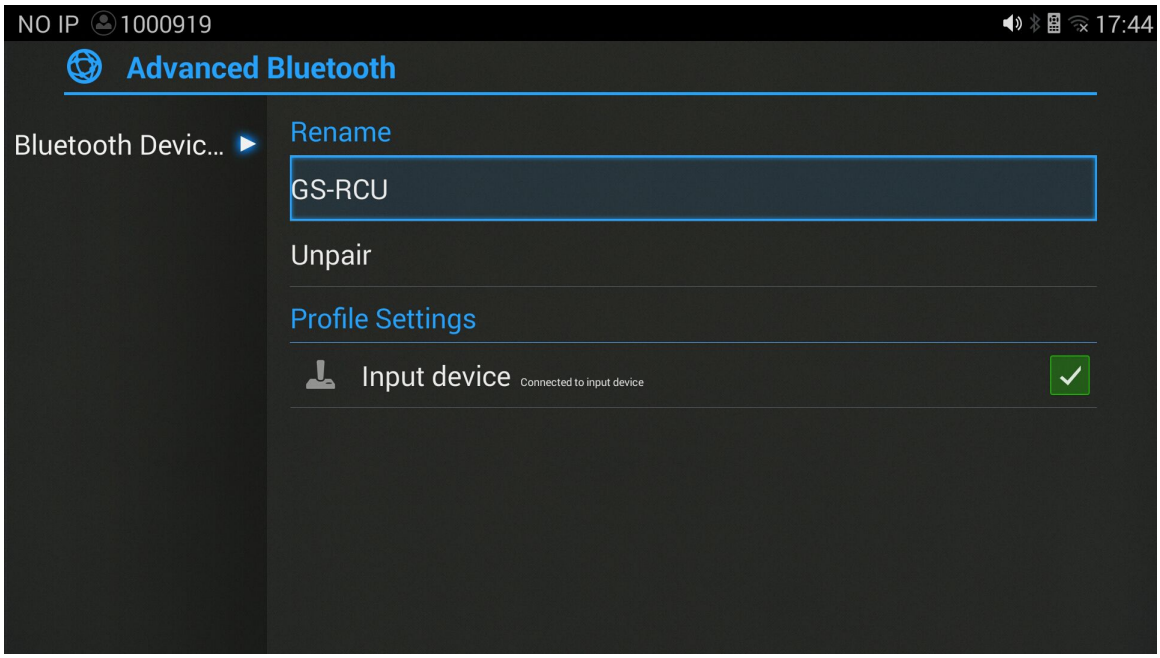

Figure 12 GVC300 Bluetooth - Paired Device

USING BLUETOOTH REMOTE CONTROL

Users could use the proprietary GVC3200 Bluetooth remote control that comes with the GVC3200 packaging. The remote control should already been paired to the GVC3200 out of the box. Users just need press "OK" key on the remote control to initiate connection once the GVC3200 boots up. Once the remote control is connected to the GVC3200, users will see icon on the top status bar of the GVC3200 LCD display device.

If the user happens to reset the GVC3200, or need replace the remote control and pair it to the GVC3200 afterwards, follow the steps below:

1. Connect a USB mouse or open the virtual remote control after logging in GVC3200 web UI.

2. On the LCD display device, go to Settings->Network->Bluetooth.
3. Select ☰ and click "Search for devices".
4. On the remote control you would like to pair with the GVC3200, press "OK" and digit 5 keys at the same time for about 5 seconds.
5. The pairing and connection process will be initiated and finished a few seconds. Please do not press any keys on the remote control or switch screens during this process to avoid connection failure.

TRANSFER FILES WITH BLUETOOTH

Users could transfer files, share contacts information with other Bluetooth portable devices after pairing and connection. A prompt for file transferring will be displayed on GVC3200 LCD display device when the GVC3200 receives the file transferring request. Accept the request to receive file and the file will be stored under LCD->Applications->File Manager->Internal Storage->Bluetooth folder.

USING BLUETOOTH HEADSET

Once the Bluetooth headset is connected, it will automatically using Bluetooth headset for calls.
By default, the ringing tone will be generated in Bluetooth headset when there is an incoming call. If the user would like to have the ringing tone generated in the GVC3200 internal ringer as well, please select enable “Always Ring Internal Ringer” under GVC3200 web UI->Settings->Call Features.

Figure 13 Always Ring Internal Ringer

VPN SETTINGS

Users can add VPN using different protocols (PPTP, L2TP/IPSec PSK, L2TP/IPSec RSA, IPSec Xauth PSK, IPSeXauth RSA and IPSec Hybrid RSA). Follow the steps below to set up VPN.

1. Access GVC3200 home screen, go to Applications ->Settings ->Network->VPN;
2. Tap on "Add VPN file" to access configuration page as shown below;

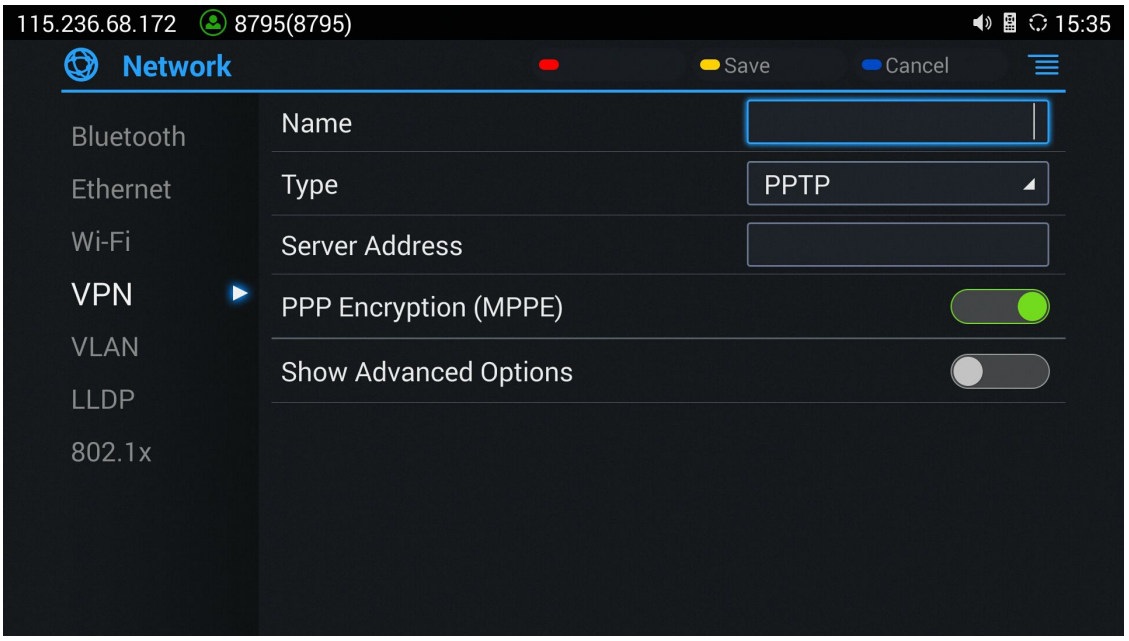

Figure 14 GVC3200 Add VPN Files Screen

3. Fill in parameters and save, go back to VPN page, you will find the new VPN file you just added;
4. Tap on the VPN file to open the validation page as shown below;

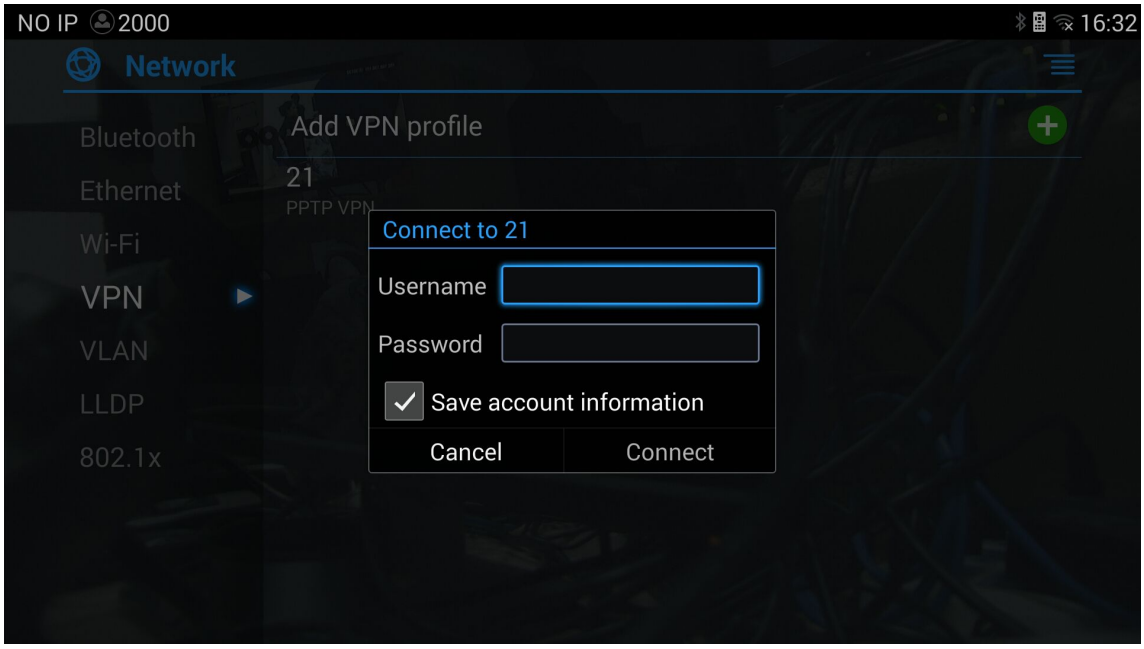

Figure 15 GVC3200 VPN Validation Screen

5. Fill in correct username and password to connect to VPN.

If the GVC3200 is connected to VPN successfully, icon

will be shown in the top status bar; if the connection is failed, a prompt box will pop up to remind users whether to connect again. If

icon displays in the top status bar, please check whether your VPN configuration is correct.

Table 10 GVC3200 VPN File Parameters

Parameters	Descriptions
Name	Fill in your company address or the server you are connecting to.
Type	Set to PPTP, L2TP/IPSec PSK, L2TP/IPSec RSA, IPSec Xauth PSK, IPSeXauth RSA or IPSec Hybrid RSA.
Server Address	Fill in the server URL or IP address.
PPP Encryption (MPPE)	Define whether to use PPP encryption.
Show Advanced Options	Check to display more options below.
DNS Search Domains	Define search domain.
DNS Server	Input DNS server address.
Forwarding Routes	Input Forwarding Routes. For example, 10.0.0.0/8.

VLAN SETTINGS

Access GVC3200 home screen, go to Applications ->Settings ->Network->VLAN to configure VLAN settings on the GVC3200.

Table 11 GVC3200 VLAN Configuration Parameters

Parameters	Descriptions
Layer 2 QoS 802.1q/VLAN Tag	Assigns the VLAN Tag of the Layer 2 QoS packets for LAN port. The default value is 0. Note: Please do not change the setting before understanding the VLAN's settings or consulting the network administrator. Otherwise, the device might not be able to get the correct IP address.
Layer 2 QoS 802.1p Priority	Assigns the priority value of the Layer 2 QoS packets. The default value is 0.

LLDP SETTINGS

Access GVC3200 home screen, go to Applications ->Settings ->Network->LLDP to configure LLDP settings on the GVC3200.

Table 12 GVC3200 LLDP Configuration Parameters

Parameters	Descriptions
LLDP	Enable or disable LLDP. The default setting is disabled.
Layer 3 QoS for SIP	This field defines the layer 3 QoS parameter for SIP packets. It is the value used for IP Precedence, Diff-Serv or MPLS. The Default value is 48.

Layer 3 QoS for Audio	This field defines the layer 3 QoS parameter for audio packets. It is the value used for IP Precedence, Diff-Serv or MPLS. The Default value is 48.
Layer 3 QoS for Video	This field defines the layer 3 QoS parameter for video packets. It is the value used for IP Precedence, Diff-Serv or MPLS. The Default value is 48;

802.1X MODE

Access GVC3200 home screen, go to Applications ->Settings ->Network->802.1X Mode. By default 802.1X is disabled. Selecting 802.1X mode to “EAP-MD5”, “EAP-TLS5” or “EAP-PEAP” to turn on 802.1X. Once enabled, the user will be required to enter the identity and Password to be authenticated in the network.

Table 13 GVC3200 802.1X Mode Parameters

Parameters	Descriptions
802.1x Mode	Allows the user to enable/disable 802.1X and configure 802.1X mode. The default setting is disabled.
Identity	Enter the Identity information for the 802.1X mode.
MD5 Password	Enter the MD5 Password for the 802.1X mode.
CA Certificate	Upload the CA certificate for the 802.1X mode.
Client Certificate	Upload the CA certificate for the 802.1X mode.
Private Key	Upload the private key for the 802.1X mode.

CAMERA

Users could set preset, configure camera parameters, start recording and make screenshots on camera screen. There are 3 ways to access camera screen:

- Click on icon on home screen.
- Press key on the remote control.
- Select on home screen to access Applications. Then click on .

The GVC3200 camera screen has the following options:

Figure 16 GVC3200 Camera Screen

PRESET

ADD/EDIT PRESET

The users can create and save maximum of 24 camera presets, with each preset storing the camera position and focal length. Follow the steps below to add preset:

1. Access camera screen and press the red shortcut key on the remote control to access preset screen.

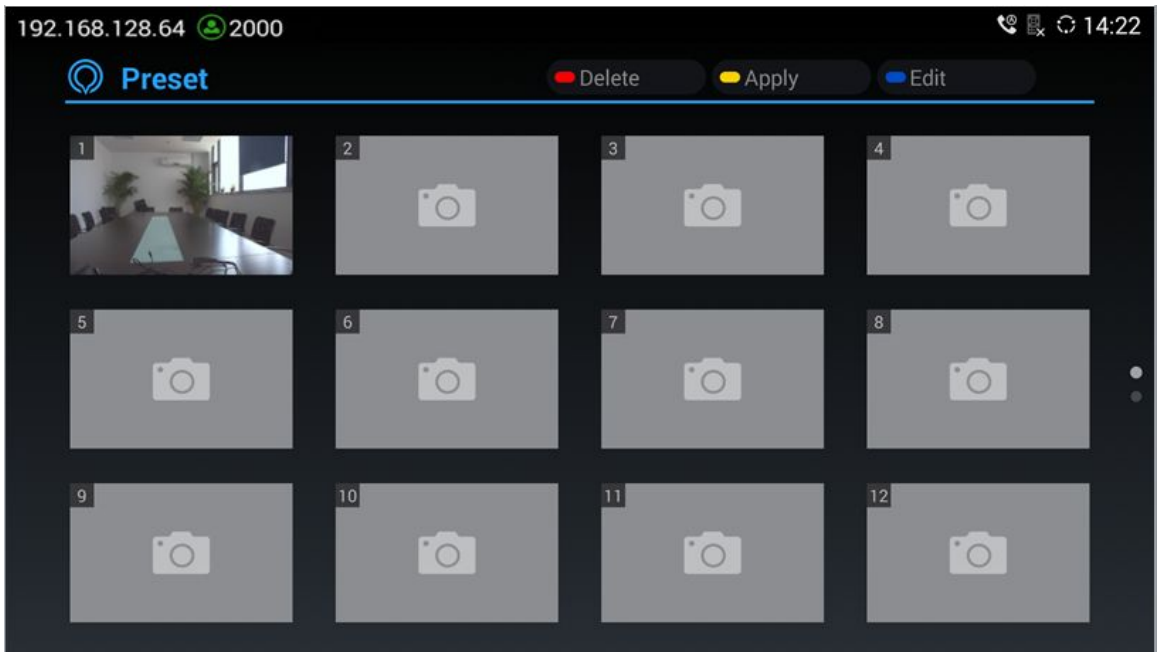

Figure 17 GVC3200 Add Preset Screen

2. Select the preset window and press the blue shortcut key on the remote control to access the editing screen.
3. Adjust camera position and zoom in/zoom out using the remote control.
4. On the remote control, press the "OK" key to save the preset, or press Back key ⮌ to cancel.
5. To edit the existing preset, press the blue shortcut key on the remote control to access the editing screen to edit.

DELETE PRESET

Access the preset editing screen, select preset and press the red shortcut key on the remote control to delete it.

APPLY PRESET

If you have already set preset on camera, you can apply preset via one of the following two ways:

- Access camera screen and press the digital keys on the remote control to adjust camera to the preset.
- Access preset screen and press the digital keys to switch to the corresponding preset, press the yellow shortcut key to apply.

CAMERA PARAMETERS CONFIGURATIONS

Press the yellow shortcut key on the remote control to bring out camera parameter setting screen as shown below. Refer to the table below and configure the parameters using navigation keys on the remote control.

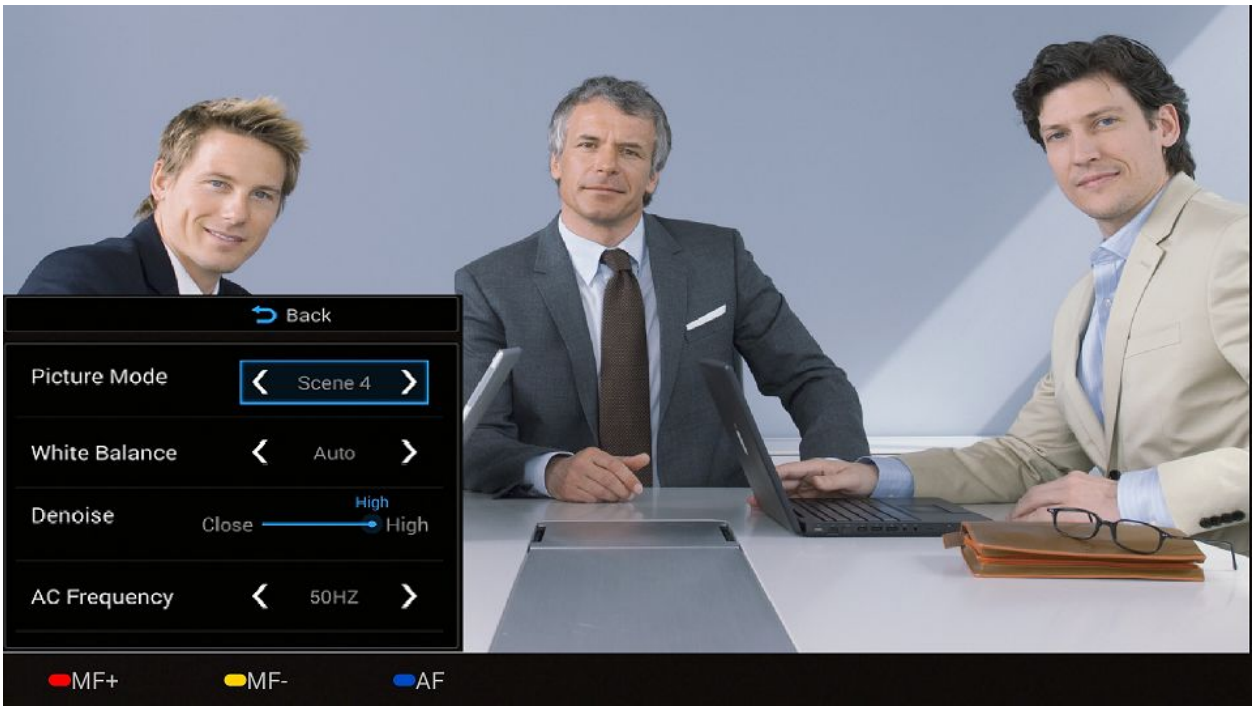

Figure 18 GVC3200 Camera Parameters Setting Screen

Table 14 GVC3200 Camera Parameters

Parameters	Descriptions
Picture Mode	The GVC3200 has 4 built-in mode as well as "Manual" for customization. When set to "Manual", press the "OK" key to access each setting to configure sharpness, contrast, saturation and brightness. • Sharpness: Higher sharpness brings higher screen clarity. The object displayed on the screen has more sharpen edge. • Contrast: Higher value brings more distinct color contrast. • Saturation: Higher value brings deeper color. • Brightness: Higher value brings brighter color.
White Balance	This is used to display accurate images. Users could set to "Manual" or "Auto". • When set to "Auto", the device will adjust parameters automatically according to the current environment. • When set to "Manual", the device will disable "Auto" mode. Press the "OK" key to access manual setting screen and adjust red or blue gain manually for better while balance.
Denoise	Users could set to "Close", "low", "medium" or "high". Higher reduction level brings less image noises.
AC Frequency	Users could set to 50HZ or 60HZ.
Red Shortcut Key (MF+)	Manual focus: increase the focal length.
Yellow Shortcut Key (MF-)	Manual focus: decrease the focal length.

Blue Shortcut Key (AF)	Auto focus.

PERIPHERAL

EXTERNAL USB DEVICE

The GVC3200 USB interface could be connected to a USB mouse, a USB keyboard, or a USB storage device.

USING USB MOUSE/KEYBOARD

When a USB mouse is plugged into the GVC3200, users could see the cursor on the screen, move the cursor to perform operations. When a USB keyboard is plugged into the GVC3200, use the remote control to navigate to an input interface and click on the keys on the keyboard to check if it is installed successfully.

USING USB STORAGE DEVICE

To connect and access USB storage device:

Insert USB storage device into USB port at the back of the GVC3200;

1. It will take a few seconds for the GVC3200 to prepare the connection.
2. Once successfully installed, the USB storage icon will show on the status bar. Uses could go to GVC3200 LCD->Applications->FileManager->USB to access and manage your data.
3. Users could view, copy and paste files by using the USB storage device.

SD CARD

1. Insert your SD card into SD card slot at the back of the GVC3200. Please make sure the SD card is inserted with right direction on GVC3200.
2. It will take a few seconds for the GVC3200 to prepare the connection. Then the SD card icon will show on the status bar;
3. To access SD Card, go to GVC3200 LCD->Applications->FileManager->sdcard. Tap on it to access and manage your data.

Note:

1. The maximum capacity of the supported external SD card is 128G.
2. The external SD card can be used to store recording files and screenshots. If you need to use the recording and screenshot function, it is recommended to use an SD card with large capacity.

MICROPHONE AND SPEAKER

GVC3200 is equipped with a built-in microphone; alternatively, you can connect external microphone arrays or other audio devices to the GVC3200 as audio input sources. Before using the GVC3200, connect the required audio input devices to the GVC3200 and set audio input parameters. The GVC3200 supports one speaker output. It is recommended to use the external speaker that comes with your GVC3200 package for better compatibility

If the external speaker supports Bluetooth, users could also pair and connect the speaker to the GVC3200 via Bluetooth. This will provide better mobility and make cabling easier when deploying the GVC3200 conference system in your conference room.