Grandstream Networks, Inc.

126 Brookline Ave, 3rd Floor
Boston, MA 02215. USA
Tel : +1 (617) 566 - 9300

www.grandstream.com

BE	BG	CZ	DK	DE	EE	IE	EL	LI
ES	FR	HR	IT	CY	LV	LT	LU	CH
HU	MT	NL	AT	PL	PT	RO	SI	TR
SK	FI	SE	NO	IS	UK	UK(NI)		

In the UK and EU member states, operation of 5150-5350 MHz is restricted to indoor use only.

For Certification, Warranty and RMA information, please visit www.grandstream.com

GRANDSTREAM
CONNECTING THE WORLD

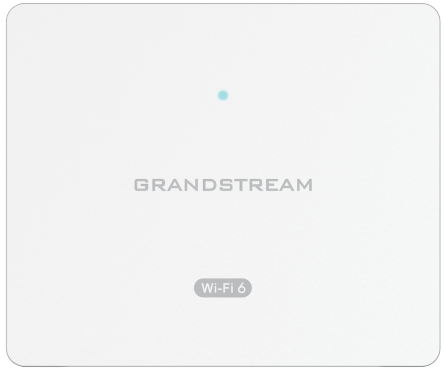

GWN7604

Mid-Tier AX3000 Wi-Fi 6 Access Point

Quick Installation Guide

Content

English.....1

EN

OVERVIEW

The GWN7604 is a compact AX3000 Wi-Fi access point designed for small businesses, hotels, and home offices. It provides versatility through four Gigabit ethernet ports, including one uplink port that can receive PoE/ PoE+ to power the access point, and two ports with PSE that can provide PoE and a network connection to other devices. The GWN7604 offers 2.4G 2x2:2 and 5G 3×3:2 MU-MIMO technology and a sophisticated antenna design to support 256 concurrent clients and up to 100-meter coverage range. This Wi-Fi access point can be easily installed and managed using GWN.Cloud (now integrated with GDMS) and GWN Manager, Grandstream's cloud and on-premise network management platforms. With support for advanced QoS, low-latency real-time applications, mesh networks, captive portals, 3Gbps wireless throughput, and four Gigabit network ports, the GWN7604 is the ideal Wi-Fi access point for small-to-medium sizēd deployments that require flexibility.

PRECAUTIONS

- Do not attempt to open, disassemble, or modify the device.
- Do not expose this device to temperatures outside range of 0 °C to 45 °C for operating and -10 °C to 60 °C for storage.
- Do not expose the GWN7603 to environments outside of the following humidity range: 10-90% RH (non-condensing).
- Do not power cycle your GWN7604 access point during system boot up or firmware upgrade. You may corrupt firmware images and cause the unit to malfunction.

PACKAGE CONTENTS

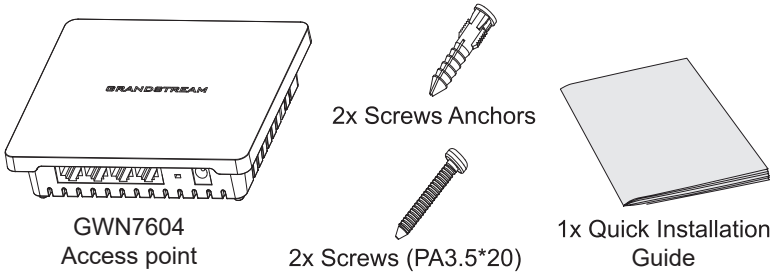

GWN7604 PORTS

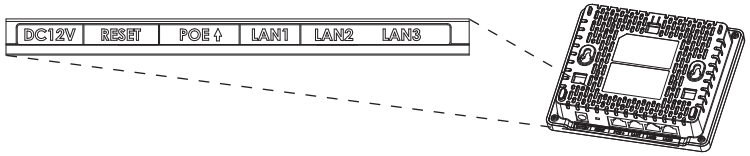

Port	Description
DC12V	Power adapter connector (DC 12V,2A).
RESET	Factory reset pinhole. Press for 7 seconds to reset factory default settings.
POE	Ethernet RJ45 port (10/100/1000Mbps) supporting PoE/PoE+.
LAN1	1 x 10/100/1000Mbps Ethernet port.
LAN2 LAN3	2 x 10/100/1000Mbps Ethernet port with PSE.

Notes:

- *If GWN7604 is powered by POE+ or a PSU (DC 12V, 2A) (not provided). It will support 12W total for LAN2/LAN3 PSE output.*
- *If powered by PoE, PSE is not supported*

POWERING AND CONNECTING THE GWN7604

The GWN7604 can be powered either using the right PSU (DC12V, 2A) (not provided) or using a PoE/PoE+ switch:

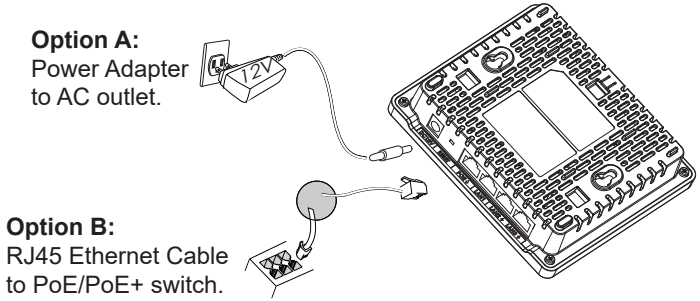

HARDWARE INSTALLATION

GWN7604 can be mounted on the wall. Please refer to the following steps for the appropriate installation.

Wall Mount

1. Use a measuring tape to measure the distance between the two wall mount slots on the back of the GWN7604 access point and use a pencil to mark the mounting screw holes on the wall.
2. Use a drill to make a hole at each marked point. Place the anchors and screws on each hole. Leave enough space between the wall and the screw head, then mount the GWN7604 on the screws using the wall mounting slots.

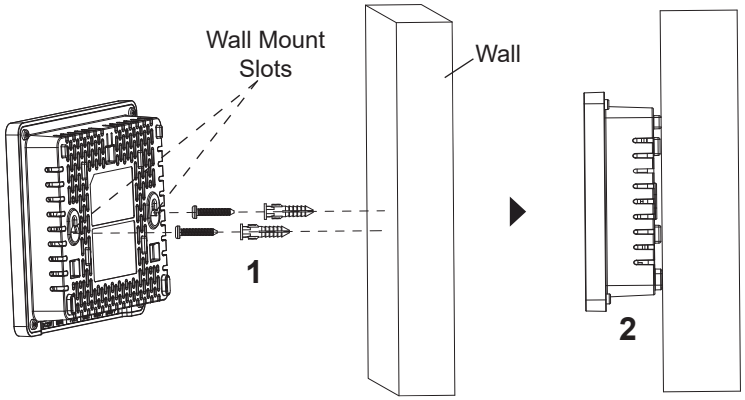

CONNECT TO GWN7604 DEFAULT Wi-Fi NETWORK

GWN7604 can be used as standalone access point out of box, or after factory reset with Wi-Fi enabled by default.

After powering the GWN7604 and connecting it to the network, GWN7604 will broadcast a default SSID based on its MAC address **GWN[MAC's last 6 digits]** and a random password.

Note: *GWN7604's default password information is printed on the sticker on the back of the unit.*

ACCESSING THE CONFIGURATION INTERFACE

A computer connected to the GWN7604's SSID, or to the same network as the GWN7604 can discover and access its configuration interface using one of the below methods:

Method 1: Discover GWN7604 using its MAC Address

1. Locate the MAC address on the MAC tag of the unit, which is on the underside of the device, or on the package.
2. From a computer connected to same network as the GWN7604, type in following address using GWN7604's MAC address on your browser **https://gwn_<mac>.local**

Example: If a GWN7604 has the MAC address C0:74:AD:8C:4D:F8, this unit can be accessed by typing **https://gwn_c074ad8c4df8.local** on the browser.

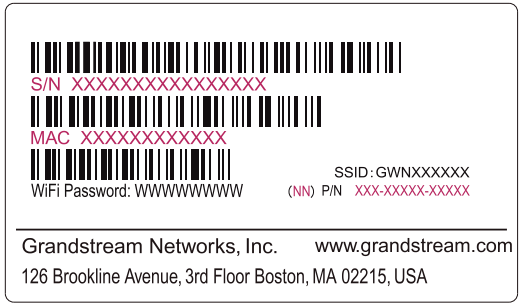

Method 2: Discover GWN7604 using GWN Discovery Tool

1. Download and install **GWN Discovery Tool** from the following link: https://www.grandstream.com/tools/GWNDiscoveryTool.zip
2. Open the GWN DiscoveryTool, and click on **Scan.**
3. The tool will discover all GWN76xx Access Points connected on the network showing their MAC and IP addresses.

4. Click on Manage Device to be redirected directly to the GWN7604's configuration interface, or type in manually the displayed IP address on your browser.
5. Enter username and password to login. (The default administrator username is "admin" and the default random password can be found on the sticker on the GWN7604).

Notes:

- *Make sure that the GWN7604 is not already paired with another GWN76xx Access Point, GWN Router Series, GWN.Cloud or GWN Manager, otherwise the configuration interface cannot be accessed.*
- *If the GWN7604 is already paired, make sure to unpair it first, or do a factory reset.*
- *It is customer's responsibility to ensure compliance with local regulations for frequency bands, transmit power and others.*
- *To manage GWN7604 over cloud, please refer to https://www.gwn.cloud.*

The GNU GPL license terms are incorporated into the device firmware and can be accessed via the Web user interface of the device at my_device_ip/gpl_license. It can also be accessed here:
https://www.grandstream.com/legal/open-source-software
To obtain a CD with GPL source code information please submit a written request to
info@grandstream.com

Refer to online documents and FAQ for more detailed information:
https://www.grandstream.com/our-products

Certification Regulatory Information

Common part

This equipment complies with radiation exposure limits set forth for an uncontrolled environment. This transmitter must not be co-located or operating in conjunction with any other antenna or transmitter. This equipment should be installed and operated with minimum distance 28cm between the radiator& your body.

Après examen de ce matériel aux conformité ou aux limites d'intensité de champ RF, les utilisateurs peuvent sur l'exposition aux radiofréquences et la conformité and compliance d'acquérir les informations correspondantes. La distance minimale du corps à utiliser le dispositif est de 28cm.

U.S. FCC Part 15 Regulatory Information

This device complies with part 15 of the FCC Rules. Operation is subject to the following two conditions:(1) this device may not cause harmful interference, and(2) this device must accept any interference received, including interference that may cause undesired operation.

Any Changes or modifications not expressly approved by the party responsible for compliance could void the user's authority to operate the equipment.

Note: This equipment has been tested and found to comply with the limits for a Class B digital device, pursuant to part 15 of the FCC Rules. These limits are designed to provide reasonable protection against harmful interference in a residential installation. This equipment generates, uses and can radiate radio frequency energy and, if not installed and used in accordance with the instructions, may cause harmful interference to radio communications. However, there is no guarantee that interference will not occur in a particular installation. If this equipment does cause harmful interference to radio or television reception, which can be determined by turning the equipment off and on, the user is encouraged to try to correct the interference by one or more of the following measures:

—Reorient or relocate the receiving antenna.

—Increase the separation between the equipment and receiver.

—Connect the equipment into an outlet on a circuit different from that to which the receiver is connected.

—Consult the dealer or an experienced radio/TV technician for help.

Canada Regulatory Information

Operation of 5150-5250 MHz is restricted to indoor use only.

This device contains licence-exempt transmitter(s)/receiver(s) that comply with Innovation, Science and Economic Development Canada's licence-exempt RSS(s). Operation is subject to the following two conditions:

(1) This device may not cause interference.

(2) This device must accept any interference, including interference that may cause undesired operation of the device.

L'émetteur/récepteur exempt de licence contenu dans le présent appareil est conforme aux CNR d'Innovation, Sciences et Développement économique Canada applicables aux appareils radio exempts de licence. L'exploitation est autorisée aux deux conditions suivantes :

1) L'appareil ne doit pas produire de brouillage;

2) L'appareil doit accepter tout brouillage radioélectrique subi, même si le

brouillage est susceptible d'en compromettre le fonctionnement.

CAN ICES-003 (B)/NMB-003(B)
This product meets the applicable Innovation, Science and Economic Development Canada technical specifications.
Le présent produit est conforme aux spécifications techniques applicables d'Innovation, Sciences et Développement économique Canada.

EU Regulatory Information

In all EU member states, operation of 5150-5350 MHz is restricted to indoor use only.
Support Frequency Bands and Power:
WLAN 2412-2472 MHz < 20 dBm;
RLAN 5150-5250 MHz < 23 dBm;
RLAN 5250-5350 MHz < 23 dBm;
RLAN 5470-5725 MHz < 30 dBm;
RLAN 5745-5825 MHz < 14 dBm.
The simplified EU declaration of conformity referred to in Article 10(9) shall be provided as follows:
Hereby, [Grandstream Networks, Inc.] declares that the radio equipment type [GWN7604] is in compliance with Directive 2014/53/EU.
The full text of the EU declaration of conformity is available at the following internet address: www.grandstream.com

BE	BG	CZ	DK	DE	EE	IE	EL	LI
ES	FR	HR	IT	CY	LV	LT	LU	CH
HU	MT	NL	AT	PL	PT	RO	SI	TR
SK	FI	SE	NO	IS	UK	UK(NI)		

In the UK and EU member states, operation of 5150-5350 MHz is restricted to indoor use only.