Grandstream Networks, Inc.

126 Brookline Ave, 3rd Floor
Boston, MA 02215. USA
Tel : +1 (617) 566 - 9300
Fax: +1 (617) 249 - 1987

www.grandstream.com

AT	BE	CY	CZ	DK	EE	FI
FR	DE	EL	HU	IE	IT	LV
LT	LU	MT	NL	PL	PT	SK
SI	ES	SE	UK	BG	RO	HR

In all EU member states, operation of 5150 - 5350 MHz is restricted to indoor use only.

For Certification, Warranty and RMA information, please visit
www.grandstream.com

GRANDSTREAM
CONNECTING THE WORLD

GWN7605

Enterprise 802.11ac Wave-2 2x2:2
Wi-Fi Access Point

Quick Installation Guide

EN

OVERVIEW

The GWN7605 is an affordable 802.11ac Wave-2 Wi-Fi access point ideal for small to medium wireless network deployments with medium user density. It offers dual-band 2x2:2 MU-MIMO with beam-forming technology and a sophisticated antenna design for maximum network throughput and expanded Wi-Fi coverage range. To ensure easy installation and management, the GWN7605 uses a controller-less distributed network management design in which the controller is embedded within the product's web user interface. The GWN7605 is also supported by GWN.Cloud and GWN Manager, Grandstream's cloud and on-premise Wi-Fi management platforms. It is the ideal Wi-Fi AP for voice-over-Wi-Fi deployments and offers a seamless connection with Grandstream's Wi-Fi-capable IP phones. With support for advanced QoS, low-latency real-time applications, mesh networks, captive portals, 100+ concurrent clients per AP and dual Gigabit network ports with PoE/PoE+, the GWN7605 is scalable Wi-Fi solution for deployments such as retail locations, restaurants, small offices and more.

PRECAUTIONS

- Do not attempt to open, disassemble, or modify the device.
- Do not expose this device to temperatures outside range of 0 °C to 40 °C for operating and -10 °C to 60 °C for storage.
- Do not expose the GWN7605 to environments outside of the following humidity range: 10-90% RH (non-condensing).
- Do not power cycle your GWN7605 during system boot up or firmware upgrade. You may corrupt firmware images and cause the unit to malfunction.

PACKAGE CONTENTS

1×GWN7605 Access Point

1×Mounting Bracket

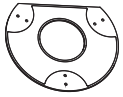

1×Ceiling Mounting Bracket

3×Screw (PM 3×50)

3× Screw (PA 3.5×20)

3×Plastic Expansion Bolt

3×M3 NUT

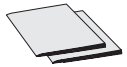

1×Quick Installation Guide

1×GPL Statement

GWN7605 PORTS

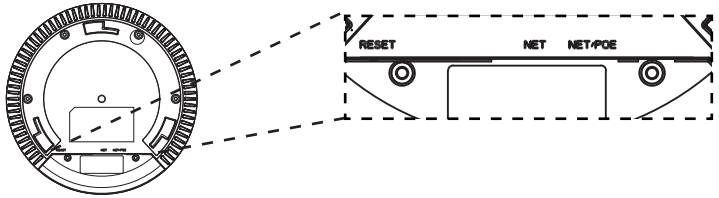

Port	Description
NET/POE	Ethernet RJ45 port (10/100/1000Mbps) supporting PoE/PoE+.
NET	Ethernet RJ45 port (10/100/1000Mbps) to your router or another GWN76xx.
RESET	Factory reset button. Press for 7 seconds to reset factory default settings.

POWERING AND CONNECTING THE GWN7605

GWN7605 can be powered on using PoE/PoE+ switch using following steps:

Step 1: Plug a RJ45 Ethernet cable into the network port of GWN7605.

Step 2: Plug the other end into the uplink port of the power over Ethernet (PoE/PoE+) switch.

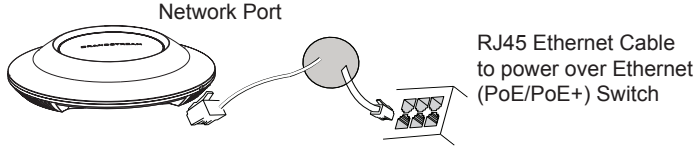

HARDWARE INSTALLATION

GWN7605 can be mounted on the wall or ceiling, Please refer to the following steps for the appropriate installation.

Wall Mount

1. Position the mounting bracket at the desired location on the wall with the arrow pointing up.

2. Use a pencil to mark the four mounting holes (screw holes DIA 5.5mm, reticle hole DIA 25mm).

3. Insert screw anchors into the 5.5 mm holes. Attach the mounting bracket to the wall by inserting the screws into the anchors.

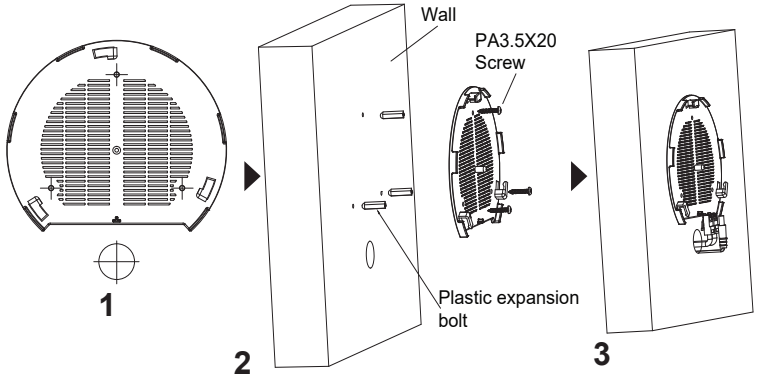

4. Connect the power cable and the ethernet cable (RJ45) to the correct ports of your GWN7605.

5. Align the arrow on the GWN7605AP with the arrow on the locking tab of the mounting bracket and ensure that your GWN is firmly seated on the mounting bracket.

6.Turn the GWN clockwise until it locks into place and fits the locking tab.

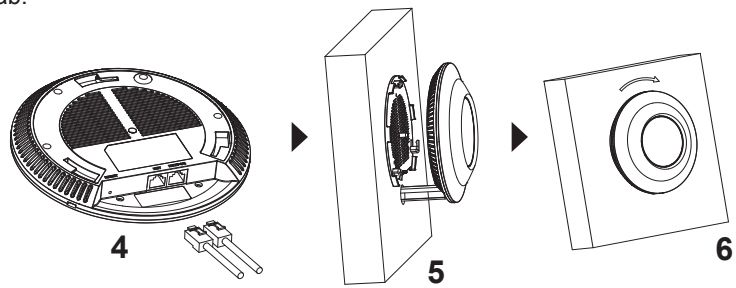

Ceiling Mount

Note: Ceiling mounting is recommended for optimal coverage performance.

1. Remove the ceiling tile.
2. Place the ceiling backing plate in the center of the ceiling tile and mark the mounting screw holes (screw holes DIA 5.5mm, reticle hole DIA 25mm).
3. Insert the screws through the mounting bracket.

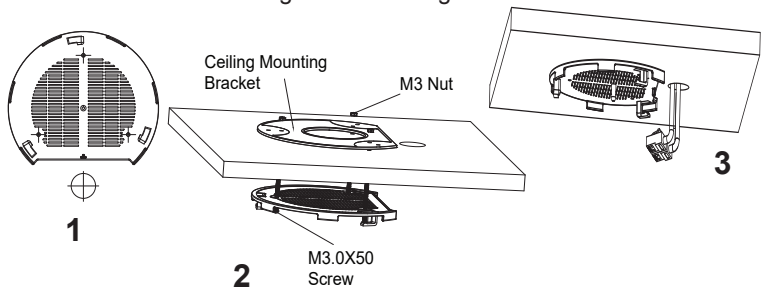

4. Connect the Ethernet cable (RJ45) to the correct ports of your GWN7605.
5. Align the arrow on the GWN7605AP with the arrow on the locking tab of the mounting bracket and ensure that your GWN is firmly seated on the mounting bracket and connect the network and power cables.
6. Turn the GWN clockwise untill it locks into place and fits the locking tab.

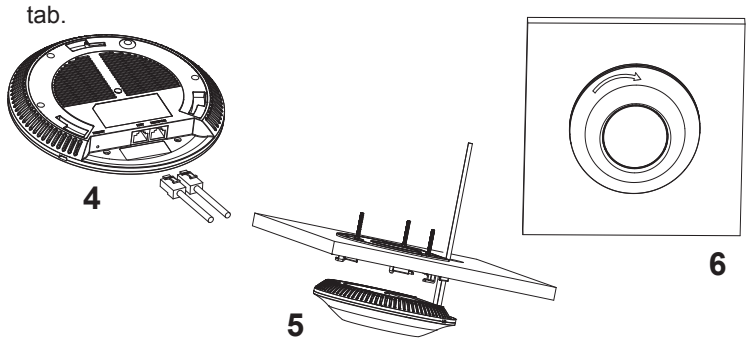

CONNECT TO GWN7605 DEFAULT Wi-Fi NETWORK

GWN7605 can be used as standalone access point out of box, or after factory reset with Wi-Fi enabled by default.

After powering the GWN7605 and connecting it to the network, GWN7605 will broadcast a default SSID based on its MAC address

GWN[MAC's last 6 digits] and a random password.

Note: GWN7605's default SSID and password information are printed on the MAC tag of the unit.

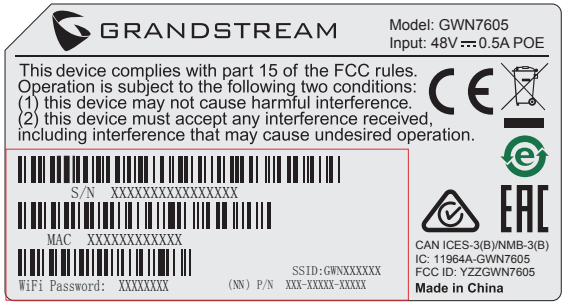

ACCESSING THE CONFIGURATION INTERFACE

A computer connected to the GWN7605's SSID, or to the same network as the GWN7605 can discover and access its configuration interface using one of the below methods:

Method 1: Discover GWN7605 using its MAC Address

1. Locate the MAC address on the MAC tag of the unit, which is on the underside of the device, or on the package.
2. From a computer connected to same network as the GWN7605, type in following address using GWN7605's MAC address on your browser **https://gwn_<mac>.local**

Example: If a GWN7605 has the MAC address 00:0B:82:8C:4D:F8, this unit can be accessed by typing **https://gwn_000b828c4df8.local** on the browser.

Method 2: Discover GWN7605 using GWN Discovery Tool

1. Download and install **GWN Discovery Tool** from the following link: http://www.grandstream.com/tools/GWNDiscoveryTool.zip
2. Open the GWN DiscoveryTool, and click on **Scan.**
3. The tool will discover all GWN76XX Access Points connected on the network showing their MAC and IP addresses.

4. Click on Manage Device to be redirected directly to the GWN7605's configuration interface, or type in manually the displayed IP address on your browser.

Enter username and password to login. (The default administrator username is "admin" and the default random password can be found at the sticker on the GWN7605).

Notes:

- Make sure that the GWN7605 is not already paired with another GWN76xx Access Point as slave, GWN7000 Router Series or anu of the GWN Management Platforms, otherwise the configuration interface cannot be accessed
- If the GWN7605 is already paired, make sure to unpair it first, or do a factory reset.
- It is customer's responsibility to ensure compliance with local regulations for frequency bands, transmit power and others.
- To manage GWN7605 over cloud,please refer to https://www.gwn.cloud.

The GNU GPL license terms are incorporated into the device firmware and can be accessed via the Web user interface of the device at my_device_ip/gpl_license. It can also be accessed here: http://www.grandstream.com/legal/open-source-software
To obtain a CD with GPL source code information please submit a written request to info@grandstream.com

Refer to online documents and FAQ for more detailed information: http://www.grandstream.com/our-products

For certification information, please refer to User Manuals:

http://www.grandstream.com

Common part:

This equipment complies with radiation exposure limits set forth for an uncontrolled environment. This transmitter must not be co-located or operating in conjunction with any other antenna or transmitter. This equipment should be installed and operated with minimum distance 20cm between the radiator& your body.

U.S. FCC Part 15 Regulatory Information

This device complies with part 15 of the FCC Rules. Operation is subject to the following two conditions: (1) this device may not cause harmful interference, and (2) this device must accept any interference received, including interference that may cause undesired operation.

Any Changes or modifications not expressly approved by the party responsible for compliance could void the user's authority to operate the equipment.

Note: This equipment has been tested and found to comply with the limits for a Class B digital device, pursuant to part 15 of the FCC Rules. These limits are designed to provide reasonable protection against harmful interference in a residential installation. This equipment generates, uses and can radiate radio frequency energy and, if not installed and used in accordance with the instructions, may cause harmful interference to radio communications. However, there is no guarantee that interference will not occur in a particular installation. If this equipment does cause harmful interference to radio or television reception, which can be determined by turning the equipment off and on, the user is encouraged to try to correct the interference by one or more of the following measures:

—Reorient or relocate the receiving antenna.
—Increase the separation between the equipment and receiver.
—Connect the equipment into an outlet on a circuit different from that to which the receiver is connected.
—Consult the dealer or an experienced radio/TV technician for help.

Canada Regulatory Information

Operation of 5150-5250 MHz is restricted to indoor use only.
This device contains licence-exempt transmitter(s)/receiver(s) that comply with Innovation, Science and Economic Development Canada's licence-exempt RSS(s). Operation is subject to the following two conditions:

(1) This device may not cause interference.

(2) This device must accept any interference, including interference that may cause undesired operation of the device.

L'émetteur/récepteur exempt de licence contenu dans le présent appareil est conforme aux CNR d'Innovation, Sciences et Développement économique Canada applicables aux appareils radio exempts de licence. L'exploitation est autorisée aux deux conditions suivantes :

1) L'appareil ne doit pas produire de brouillage;

2) L'appareil doit accepter tout brouillage radioélectrique subi, même si le brouillage est susceptible d'en compromettre le fonctionnement.

CAN ICES-3 (B)/NMB-3(B)