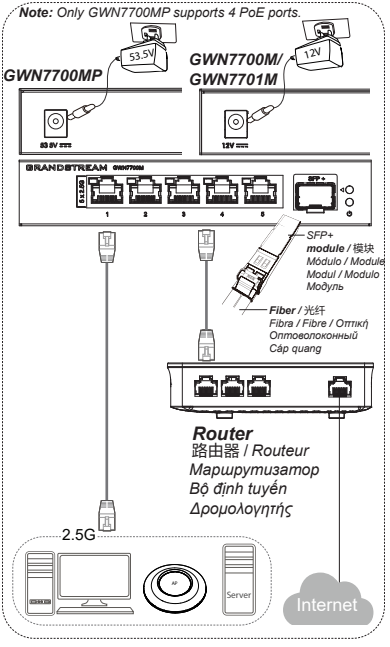

For Certification, Warranty and RMA information, please visit: www.grandstream.com

GRANDSTREAM
CONNECTING THE WORLD

GWN7700M(P) & GWN7701M

5&8 Unmanaged 2.5G Multi-Gigabit Port and 1 SFP+ Port Switch

Quick Installation Guide

Grandstream Networks, Inc.

126 Brookline Ave, 3rd Floor
Boston, MA 02215. USA
Tel : +1 (617) 566 - 9300

www.grandstream.com

EN

Operating Temperature: 0 to 40 °C (32 to 104 °F)

Storage Temperature: -20 to 60 °C (-4 to 140 °F)

Operating Humidity: 10% to 90% Non-condensing

Storage Humidity: 10% to 90% Non-condensing

Power Adapter: Output:
GWN7700M/7701M: +12VDC, 1A
GWN7700MP: 53.5DC, 1.22A

Ethernet Port:
100/1000/2500Mbps RJ-45 port

SFP+ Port

ZH

操作温度: 0至40°C(32至104°F)
存储温度: −20至60°C(−4至140°F)
工作湿度: 10%～90%不凝结
存储湿度: 10%～90%不凝结
电源适配器: 输出:
GWN7700M/7701M:
+12VDC，1A
GWN7700MP：53.5VDC, 1.22A
以太网接口: 100/1000/2500 Mbps RJ-45
SFP+ 端口

ES

Temperatura (funcionamiento): 0 a 40 °C (32 a 104 °F)

Temperatura (almacenamiento): -20 a 60 °C (-4 a 140 °F)

Humedad de funcionamiento: 10% a 90% sin condensación

Humedad de almacenamiento: 10% a 90 % sin condensación

Adaptador: Salida:
GWN7700M/7701M: +12 VDC, 1 A
GWN7700MP: 53,5 VDC, 1,22 A

Puerto Ethernet: puerto RJ-45 de 100/1000/2500Mbps

Puerto SFP+

FR

Température (Fonctionnement): 0 à 40 °C (32 à 104 °F).

Température (Stockage): -20 à 60 °C (-4 à 140 °F).

Humidité (Fonctionnement): 10 % à 90 % sans condensation.

Humidité (Stockage): 10 % à 90 % sans condensation.

Adaptateur: Sortie :
GWN7700M/7701M: 12CC, 1 A
GWN7700MP: 53,5CC, 1,22 A

Port Ethernet: port RJ45 100/1000/2500 Mbps.

Port SFP+

PT

Temperatura (operação): 0 a 40 °C (32 a 104 °F)

Temperatura (armazenamento): -20 a 60 °C (-4 a 140 °F)

Umidade operacional: 10% a 90% Sem condensação

Umidade de armazenamento: 10% a 90% sem condensação

Adaptador: Saída:
GWN7700M/7701M: +12VDC, 1A
GWN7700MP: +53,5VDC, 1,22A

Porta Ethernet: porta RJ-45 de 100/1000/2500Mbps

Porta SFP+

VI

Nhiệt độ hoạt động: 0 đến 40 °C (32 đến 104 °F)

Nhiệt độ bảo quản: -40 đến 70 °C (-4 đến 140 °F)

Độ ẩm hoạt động: 10% đến 90% Không ngưng tụ

Độ ẩm bảo quản: 10% đến 90% Không ngưng tụ

Nguồn cấp (adapter) đầu ra:
GWN7700M/7701M: +12VDC, 1A
GWN7700MP: +53,5VDC, 1,22A

Cổng mạng RJ-45:
100/1000/2500Mbps.

Cổng mạng SFP+

IT

Temperatura di esercizio: da 0 a 40 °C (da 32 a 104 °F)

Temperatura di stoccaggio: da -20 a 60 °C (da -4 a 140 °F)

Umidità di esercizio: da 10% a 90% senza condensa

Umidità di stoccaggio: da 10% a 90% senza condensa

Alimentatore: Uscita:
GWN7700M/7701M: +12 V CC, 1 A
GWN7700MP: +53,5 V CC, 1,22 A

Porta Ethernet: RJ-45 100/1000/2500Mbps

Porta SFP+

DE

Betriebstemperatur: 0°C bis 40°C

Lagertemperatur: -20°C bis 60°C

Luftfeuchte Betrieb: 10% bis 90% nicht-kondensierend

Luftfeuchte Lagerung: 10% bis 90% nicht- kondensierend

Steckernetzteil: Ausgabe
GWN7700M/7701M: +12VDC, 1 A
GWN7700MP: +53,5 VDC, 1,22 A

Ethernet-Port:
100/1000/2500Mbps RJ-45 port

SFP+ Port

EL

Επίπεδα θερμοκρασίας κατά τη λειτουργία: 0 έως 40 °C (32 έως 104 °F)

Επίπεδα θερμοκρασίας κατά τη αποθήκευση: -20 έως 60 °C (-4 έως 140 °F)

Επίπεδα υγρασίας κατα τη λειτουργία: 10% έως 90% Μη συμπυκνωμένη

Επίπεδα υγρασίας κατα τη αποθήκευση: 10% έως 90% Μη συμπυκνωμένη

Μετασχηματιστής: Έξοδος:
GWN7700M/7701M: +12VDC, 1A
GWN7700MP: +53,5VDC, 1,22A

Θύρα Ethernet: Θύρα RJ-45 100/1000/2500Mbps

Θύρα SFP+

RU

Рабочая температура: от 0 до 40 °C (от 32 до 104 °F)

Температура хранения: от -20 до 60 °C (от -4 до 140 °F)

Рабочая влажность: от 10% до 90% без конденсации

Влажность хранения: от 10% до 90% без конденсации

Адаптер: Выход:
GWN7700M/7701M: +12 В постоянного тока, 1 А
GWN7700MP: +53,5 В постоянного тока, 1,22 А

Порт Ethernet: RJ-45 100/1000/2500 Мбит/с

Порт SFP+