Grandstream Networks, Inc.

126 Brookline Ave, 3rd Floor
Boston, MA 02215. USA
Tel : +1 (617) 566 - 9300

www.grandstream.com

For Certification, Warranty and RMA information, please visit
www.grandstream.com

GRANDSTREAM
CONNECTING THE WORLD

GWN7816 - GWN7816P

Enterprise Layer 3 Managed Network Switch

Quick Installation Guide

Content

English.....1

EN

OVERVIEW

The GWN7816(P) is layer 3 managed network switch that allows medium-to-large enterprises to build scalable, secure, high performance and smart business networks that are fully manageable. It supports advanced VLAN for flexible and sophisticated traffic segmentation, advanced QoS for prioritization of network traffic, IGMP/MLD Snooping for network performance optimization, and comprehensive security capabilities against potential attacks. The GWN7816P provides smart dynamic PoE output to power IP phones, IP cameras, Wi-Fi access points and other PoE endpoints. GWN7816(P) can be managed in a number of ways, including the local Web user interface of the GWN7816(P) switch and CLI, the command-line interface. The switch is also supported by GWN.Cloud and GWN Manager, Grandstream's cloud and on-premise network management platform. The GWN7816(P) is the best value enterprise-grade managed network switch for medium-to-large businesses.

PRECAUTIONS

- Do not attempt to open, disassemble, or modify the device.
- Do not expose this device to temperature outside range of 0 °C to 45 °C for operation and -10 °C to 60 °C for storage.
- Do not expose this device to environments outside of the following humidity range: 10-90% RH (non-condensing) for operation and 10-90% RH (non-condensing) for storage.
- Do not power cycle your GWN7816(P) during system boot up or firmware upgrade. You may corrupt firmware images and cause the unit to malfunction.

PACKAGE CONTENTS

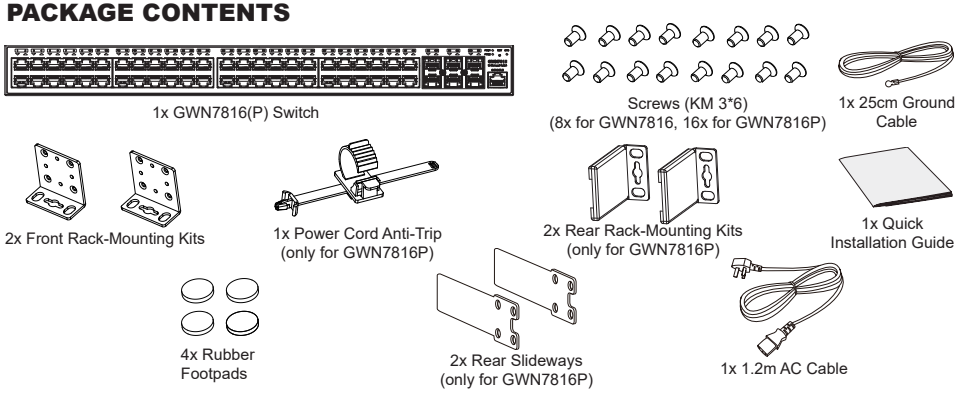

PORTS & LED INDICATORS

Front Panel

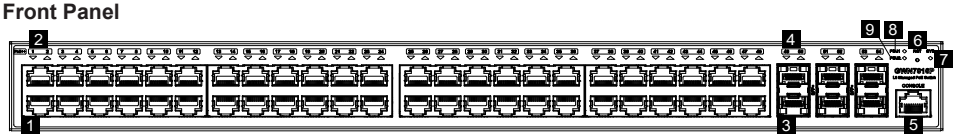

Back Panel

GWN7816

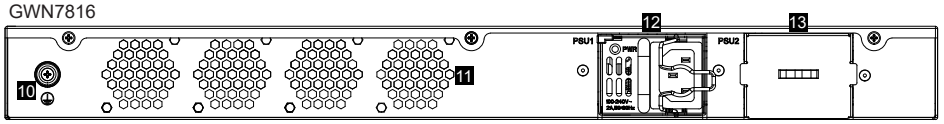

GWN7816P

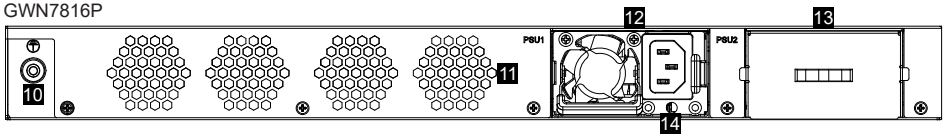

No.	Port & LED	Description
1	Port 1-48	48x Ethernet RJ45(10/100/1000Mbps), used for connecting terminals ***Note:*** *GWN7816P Ethernet ports support PoE/PoE+, and port 1-8 support PoE++*
2	1-48	Ethernet ports' LED indicators
3	Port SFP+ 49-54	6x 10Gbps SFP+ ports
4	SFP+ 49-54	SFP+ ports' LED indicators
5	Console	1x Console port, used to connect a PC directly to the switch and manage it.
6	RST	Factory Reset pinhole. Press for 5 seconds to reset factory default settings
7	SYS	System LED indicator
8	PSU 1	Standard hot swapping power supply unit LED indicator
9	PSU 2	Secondary hot swapping power supply unit LED indicator
10		Grounding terminal
11	Fan	4x Fans
12		Standard hot swapping power supply unit 1
13		Dummy panel of secondary hot swapping power supply unit 2, which can be removed to insert PSU2
14		Power cord anti-trip hole

Note: *Secondary hot swapping PSU2 (power supply unit) is sold separately.*

LED Indicator

LED Indicator	Status	Description
System Indicator	Off	Power off
	Solid green	Booting
	Flashing green	Upgrade
	Solid blue	Normal use
	Flashing blue	Provisioning
	Solid red	Upgrade failed
	Flashing red	Factory reset
Port Indicator	Off	For all ports, port off & For SFP+ ports, port failure
	Solid green	Port connected and there is no activity
	Flashing green	Port connected and data is transferring
	Solid yellow	Ethernet port connected and PoE powered
	Flashing yellow	Ethernet port connected, data is transferring and PoE powered
	Alternately flashing yellow and green	Ethernet port failure
PSU 1/2 Indicator	Off	No PSU inserted
	Green	PSU in use
	Solid Red	PSU failure

POWERING & CONNECTING

Grounding the Switch

1. Remove the ground screw from the back of switch, and connect one end of the ground cable to the wiring terminal of switch.
2. Put the ground screw back into the screw hole, and tighten it with a screwdriver.
3. Connect the other end of the ground cable to other device that has been grounded or directly to the terminal of the ground bar in the equipment room.

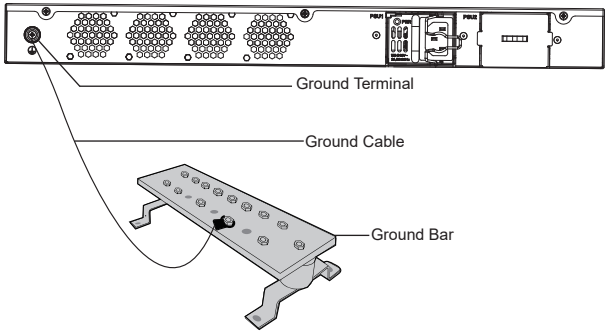

Powering on the Switch

Notes:

- *The GWN7816(P) uses a hot-swappable power supply unit to maintain the normal operation of the device.*
- *The PSU for GWN7816 comes with iron wire to prevent tripping.*
- *The PSU for GWN7816P comes with power cord anti-trip hole.*
- *In order to protect the stable power supply, it's recommended to fix the AC cable.*

For GWN7816:

1. Rotate the iron wire counterclockwise, then insert the AC cable into the power socket.
2. Push the iron wire back until the power cord is secured.

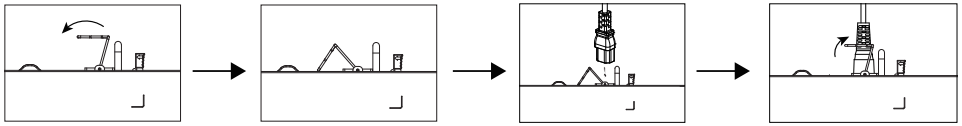

For GWN7816P:

1. Place the smooth side of the fixing strap towards the power outlet and insert it into the hole on the side of it.
2. Connect the power cable and PSU1, then slide the protective rope over the fixed strap until the end of the power cord and smoothly wrap the strap around the power cord and lock it tightly.
3. Plug the AC power cord into a power source such as a wall socket or power strip.
4. When you apply power, both the LED on the PSU and the switch's PSU1 indicator on the front panel that is associated with the power supply. If these LEDs are not lit, make sure that the power cord is plugged in correctly and that power source is good.

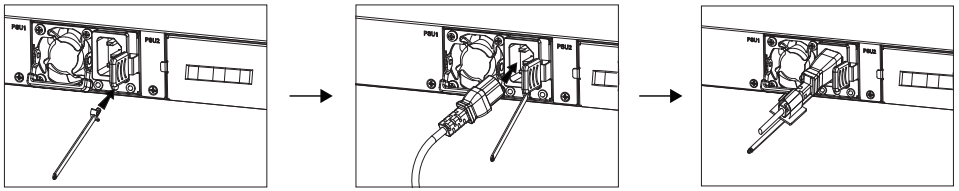

PORT CONNECTING

Connect to RJ45 Port

1. Connect one end of the network cable to the switch, and the other end to the peer device.
2. After powered on, check the status of the port indicator. If on, it means that the link is connected normally; if off, it means the link is disconnected, please check the cable and the peer device whether is enabled.

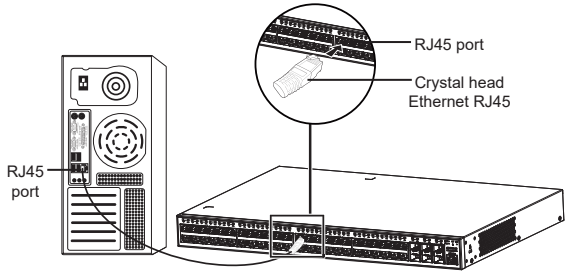

Connect to SFP+ Port

The installation process of the fiber module is as follows:

1. Grasp the fiber module from the side and insert it smoothly along the switch SFP+ port slot until the module is in close contact with the switch.
2. When connecting, pay attention to confirm the Rx and Tx ports of SFP+ fiber module. Insert one end of the fiber into the Rx and Tx ports correspondingly, and connect the other end to another device.
3. After powered on, check the status of the port indicator. If on, it means that the link is connected normally; if off, it means the link is disconnected, please check the cable and the peer device whether is enabled.

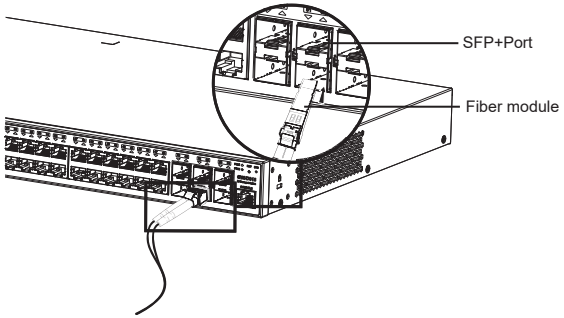

Notes:

- *Please select the optical fiber cable according to the module type. The multi-mode module corresponds to the multi-mode optical fiber, and the single-mode module corresponds to the single-mode optical fiber.*
- *Please select the same wavelength optical fiber cable for connection.*
- *Please select an appropriate optical module according to the actual networking situation to meet different transmission distance requirements.*
- *The laser of the first-class laser products is harmful to eyes. Do not look directly at the optical fiber connector.*

Connect to Console Port

1. Connect the console cable (prepared by yourself) to the DB9 male connector or USB port to the PC.
2. Connect the other end of the RJ45 end of the console cable to the console port of switch.

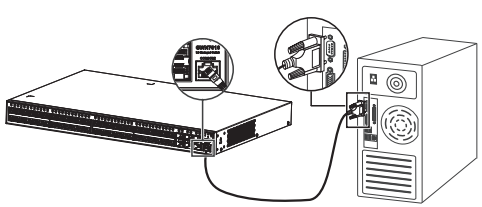

Connect to Console Port (DB9)

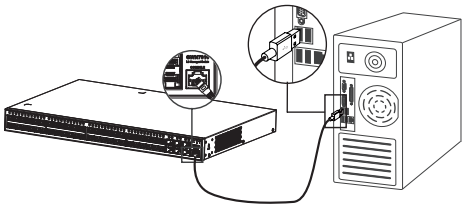

Connect to Console Port (USB)

Notes:

- *To connect, the steps order (1 -> 2) must be respected.*
- *To disconnect, the steps order is reversed (2 -> 1).*

INSTALLATION

Install on the Desktop

1. Place the bottom of switch on a sufficiently large and stable table.
2. Peel off the rubber protective paper of the four footpads one by one, and stick them in the corresponding circular grooves at the four corners of the bottom of the case.
3. Flip the switch over and place it smoothly on the table.

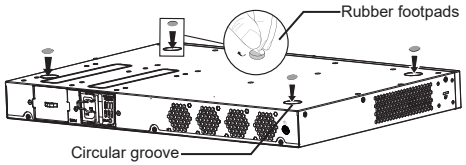

Install on a 19" Standard Rack (Only for GWN7816)

1. Check the grounding and stability of the rack.
2. Install the two front rack-mounting supplied with the accessories on both sides of the switch, and fix them with the provided screws (KM 3*6).
3. Place the switch in a proper position in the rack and support it by the bracket.
4. Fix the two front rack-mounting to the guide grooves at both ends of the rack with screws (prepared by yourself) to ensure that the switch is stable and horizontally installed on the rack.

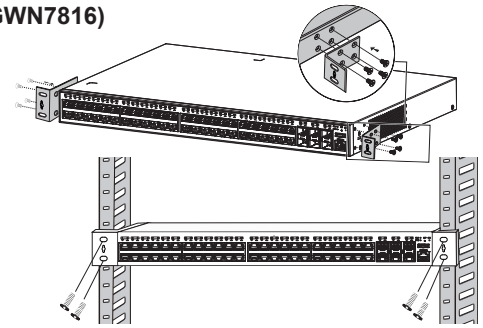

Install on a 19" Cabinet (Only for GWN7816P)

Note: *GWN7816P can only be installed in cabinets with a spacing of 380mm-545mm between the front and rear hole bars.*

1. Install the two rear slideways supplied with the accessories on both sides of the switch, and fix them with the provided screws (KM 3*6).
2. Based on the planned installation position of the switch on the cabinet, confirm and install the two rear rack-mounting kits at the appropriate positions on the rear hole strip with screws (prepared by yourself).
3. Install the two front rack-mounting kits on the both sides of the switch, and fix them with the provided screws (KM 3*6). Please refer to step 2 of GWN7816's installation.
4. Hold the switch and install it into the cabinet, embedding the slideways into the rear rack-mounting kits to ensure they support the switch. After adjusting to the appropriate position, use screws (prepared by yourself) to fix the front rack-mounting kits to the front hole strip, ensuring the switch is stable and horizontally installed on the cabinet.

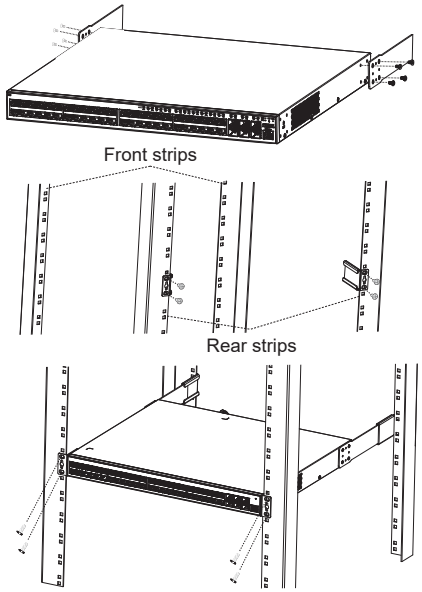

Note: *To avoid high temperatures and keep the device cool, sufficient space should be left around the switch for heat dissipation. The air inlet of the switch cannot face or be close to the air outlet of other devices.*

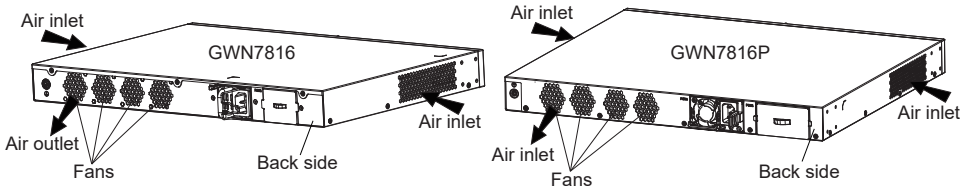

ACCESS & CONFIGURE

Note: *If no DHCP server is available, the GWN7816(P) default IP address is 192.168.0.254.*

Method 1: Login using the Web UI

1. A PC uses a network cable to correctly connect any RJ45 port of the switch.
2. Set the Ethernet (or local connection) IP address of the PC to 192.168.0.x ("x" is any value between 1-253), and the subnet mask to 255.255.255.0, so that it is in the same network segment with switch IP address. If DHCP is used, this step could be skipped.
3. Type the switch's management IP address http://<gwn7816(P)_IP> in the browser, and enter username and password to login. (The default administrator username is "admin" and the default random password can be found at the sticker on the GWN7816(P) switch).

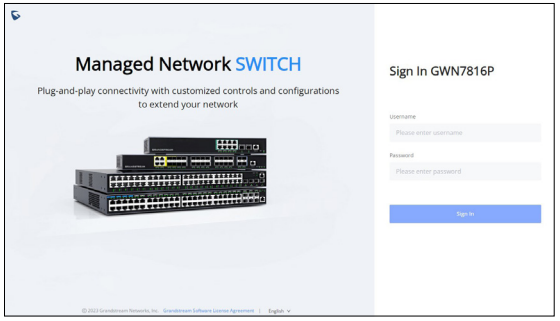

Method 2: Login using the Console port

1. Use the console cable to connect the console port of switch and the serial port of PC.
2. Open the terminal emulation program of PC (e.g. SecureCRT), enter the default username and password to login. (The default administrator username is "admin" and the default random password can be found at the sticker on the GWN7816(P) switch).

Method 3: Login Remotely using SSH/Telnet

1. Turn on the Telnet of the switch.
2. Enter "***cmd***" in PC/Start.
3. Enter ***telnet <gwn7816(P)_IP>*** in the cmd window.
4. Enter the default username and password to login. (The default administrator username is "admin" and the default random password can be found at the sticker on the GWN7816(P) switch).

Method 4: Configure using GWN.Cloud / GWN Manager

Type **https://www.gwn.cloud** (**https://<gwn_manager_IP>** for GWN Manager) in the browser, and enter the account and password to login the cloud platform. If you don't have an account, please register first or ask the administrator to assign one for you.

The GNU GPL license terms are incorporated into the device firmware and can be accessed via the Web user interface of the device at my_device_ip/gpl_license. It can also be accessed here: https://www.grandstream.com/legal/open-source-software To obtain a CD with GPL source code information please submit a written request to: info@grandstream.com

Refer to online documents and FAQ for more detailed information:
https://www.grandstream.com/our-products

Certification Regulatory Information

U.S. FCC Part 15 Regulatory Information

This device complies with part 15 of the FCC Rules. Operation is subject to the following two conditions:(1) this device may not cause harmful interference, and(2) this device must accept any interference received, including interference that may cause undesired operation.

Any changes or modifications not expressly approved by the party responsible for compliance could void the user's authority to operate the equipment.

NOTE: This equipment has been tested and found to comply with the limits for a Class A digital device, pursuant to part 15 of the FCC Rules. These limits are designed to provide reasonable protection against harmful interference when the equipment is operated in a commercial environment. This equipment generates, uses, and can radiate radio frequency energy and, if not installed and used in accordance with the instruction manual, may cause harmful interference to radio communications. Operation of this equipment in a residential area is likely to cause harmful interference in which case the user will be required to correct the interference at his own expense.

Canada Regulatory Information

CAN ICES-003 (A)/NMB-003(A)

This product meets the applicable Innovation, Science and Economic Development Canada technical specifications.

Le présent produit est conforme aux spécifications techniques applicables d'Innovation, Sciences et Développement économique Canada.

EU Regulatory Information

Hereby, [Grandstream Networks, Inc.] declares that the equipment type [GWN7816P/GWN7816] is in compliance with Directive 2014/30/EU&2014/35/EU.

The full text of the EU declaration of conformity is available at the following internet address: www.grandstream.com

UK Regulatory Information

Hereby, [Grandstream Networks, Inc.] declares that the equipment type [GWN7816P/GWN7816] is in compliance with UK SI 2016 No. 1091&2016 No. 1101.

The full text of the UK declaration of conformity is available at the following internet address: www.grandstream.com