MEASUREMENT REPORT
FCC Part 15B

FCC ID: YZZGXV3240D

APPLICANT: Grandstream Networks, Inc.

Application Type: Certification
Product: IP Multimedia Phone
Model No.: GXV3240D
Brand Name: Grandstream
FCC Classification: FCC Class B Digital Device (JBP)
FCC Rule Part(s): FCC Part 15 Subpart B
Test Procedure(s): ANSI C63.4: 2009
Test Date: Nov. 21 ~ Dec. 09, 2014

Reviewed By : Robin Wu
(Robin Wu)

Approved By : Marlin Chen
(Marlin Chen)

ACCREDITED
TESTING LABORATORY
CERTIFICATE #3628.01

The test results relate only to the samples tested.
This equipment has been shown to be capable of compliance with the applicable technical standards as indicated in the measurement report and was tested in accordance with the measurement procedures specified in ANSI C63.4-2009. Test results reported herein relate only to the item(s) tested.
The test report shall not be reproduced except in full without the written approval of MRT Technology (Suzhou) Co., Ltd.

Revision History

Report No.	Version	Description	Issue Date
1411RSU03605	Rev. 01	Initial report	12-09-2014
1411RSU03605	Rev. 02	Add some set-up descriptions	12-15-2014

CONTENTS

Description Page

§2.1033 General Information 4

1. INTRODUCTION 5

1.1. Scope 5
1.2. MRT Test Location 5

2. PRODUCT INFORMATION 6

2.1. Equipment Description 6
2.2. Test Configuration 7
2.3. Test Software 8
2.4. EMI Suppression Device(s)/Modifications 8
2.5. Labeling Requirements 9

3. DESCRIPTION OF TEST 10

3.1. Evaluation Procedure 10
3.2. AC Line Conducted Emissions 10
3.3. Radiated Emissions 11

4. TEST EQUIPMENT CALIBRATION DATE 12

5. MEASUREMENT UNCERTAINTY 13

6. TEST RESULT 14

6.1. Summary 14
6.2. Conducted Emission Measurement 15
6.2.1. Test Limit 15
6.2.2. Test Setup 15
6.2.3. Test Result of Conducted Emissions 16
6.3. Radiated Emission Measurement 20
6.3.1. Test Limit 20
6.3.2. Test Setup 20
6.3.3. Test Result of Radiated Emissions 22

7. CONCLUSION 30

§2.1033 General Information

Applicant:	Grandstream Networks, Inc.
Applicant Address:	5F, Bldg #1, No.2 Kefa Rd., Science & Technology Park, Shenzhen, China
Manufacturer:	Grandstream Networks, Inc.
Manufacturer Address:	5F, Bldg #1, No.2 Kefa Rd., Science & Technology Park, Shenzhen, China
Test Site:	MRT Technology (Suzhou) Co., Ltd
Test Site Address:	D8 Building, Youxin Industrial Park, No.2 Tian'edang Rd., Wuzhong Economic Development Zone, Suzhou, China
MRT FCC Registration No.:	809388
Model No.:	GXV3240D
FCC ID:	YZZGXV3240D
Test Device Serial No.:	N/A ☐ Production ☒ Pre-Production ☐ Engineering
FCC Classification:	FCC Class B Digital Device (JBP)

Test Facility / Accreditations

Measurements were performed at MRT Laboratory located in Tian'edang Rd., Suzhou, China.

- **MRT facility is a FCC registered (MRT Reg. No. 809388) test facility with the site description report on file and has met all the requirements specified in Section 2.948 of the FCC Rules.**
- **MRT facility is an IC registered (MRT Reg. No. 11384A-1) test laboratory with the site description on file at Industry Canada.**
- **MRT facility is a VCCI registered (R-4179, G-814, C-4664, T-2206) test laboratory with the site description on file at VCCI Council.**
- **MRT Lab is accredited to ISO 17025 by the American Association for Laboratory Accreditation (A2LA) under the American Association for Laboratory Accreditation Program (A2LA Cert. No. 3628.01) in EMC, Telecommunications and Radio testing for FCC, Industry Canada, EU and TELEC Rules.**

American Association for Laboratory Accreditation

Accredited Laboratory

A2LA has accredited

MRT TECHNOLOGY (SUZHOU) CO., LTD.

Suzhou, China

for technical competence in the field of

Electrical Testing

This laboratory is accredited in accordance with the recognized International Standard ISO/IEC 17025:2005 *General requirements for the competence of testing and calibration laboratories*. This accreditation demonstrates technical competence for a defined scope and the operation of a laboratory quality management system (*refer to joint ISO-ILAC-IAF Communique dated 8 January 2009*).

Presented this 17th day of June 2014.

President & CEO
For the Accreditation Council
Certificate Number 3628.01
Valid to August 31, 2016

For the tests to which this accreditation applies, please refer to the laboratory's Electrical Scope of Accreditation.

1. INTRODUCTION

1.1. Scope

Measurement and determination of electromagnetic emissions (EMC) of radio frequency devices including intentional and/or unintentional radiators for compliance with the technical rules and regulations of the Federal Communications Commission and the Industry Canada Certification and Engineering Bureau.

1.2. MRT Test Location

The map below shows the location of the MRT LABORATORY, its proximity to the Taihu Lake. These measurement tests were conducted at the MRT Technology (Suzhou) Co., Ltd. Facility located at D8 Building, No.2 Tian'edang Rd., Wuzhong Economic Development Zone, Suzhou, China. The detailed description of the measurement facility was found to be in compliance with the requirements of § 2.948 according to ANSI C63.4-2009 on September 30, 2013.

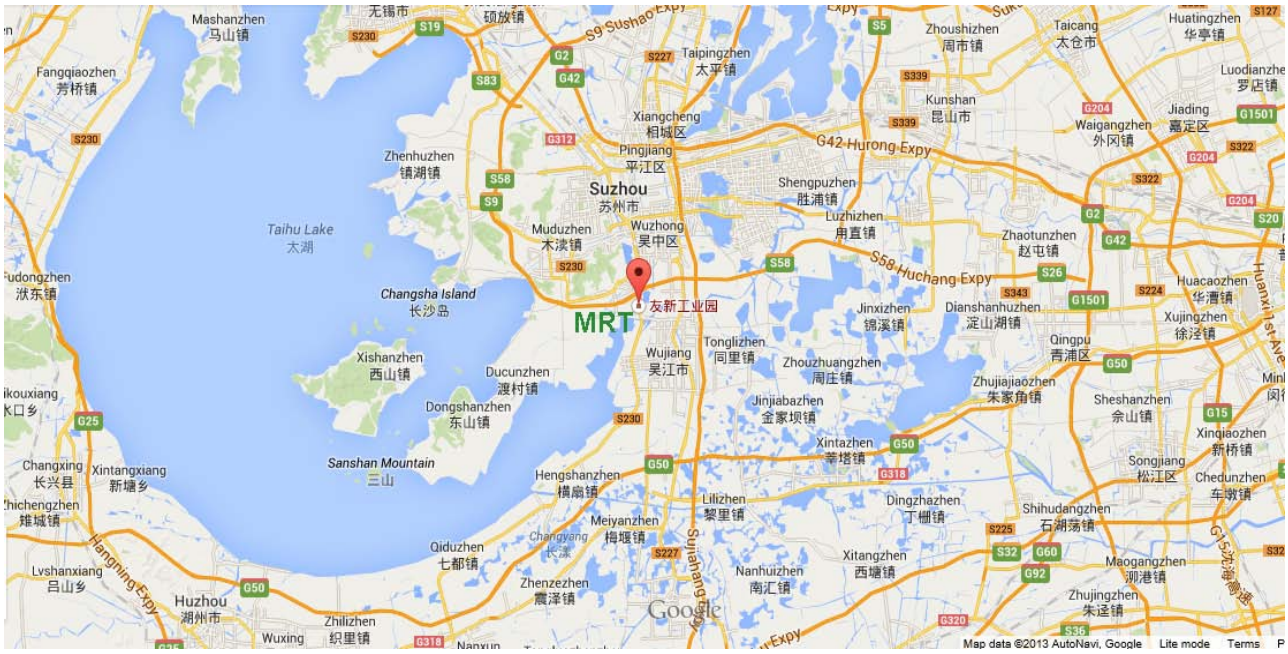

2. PRODUCT INFORMATION

2.1. Equipment Description

Product Name	IP Multimedia Phone
Model No.	GXV3240D
Power Type	12Vdc, 1.5A (or POE input)
Frequency Range	**For 2.4G Band:** 802.11b/g/n-HT20: 2412 ~ 2462 MHz **For 5.0G Band:** 802.11a/n-HT20: 5180 ~ 5320MHz 5500 ~ 5700MHz 5745 ~ 5825MHz
Type of Modulation	802.11b: DSSS 802.11g/a/n: OFDM
Component	
Adapter	Model: SFF1200150A1BY Input: 100-240V ~ 50/60Hz 0.4A Output: 12.0V ~ 1.5A

2.2. Test Configuration

The IP Multimedia Phone FCC ID: YZZGXV3240D was tested per the guidance FCC Part 15 Subpart B: 2013 and ANSI C63.4: 2009 was used to reference the appropriate EUT setup for radiated spurious emissions testing and AC line conducted testing.

Connection Diagram - Mode 1: Communication (Powered by adapter)
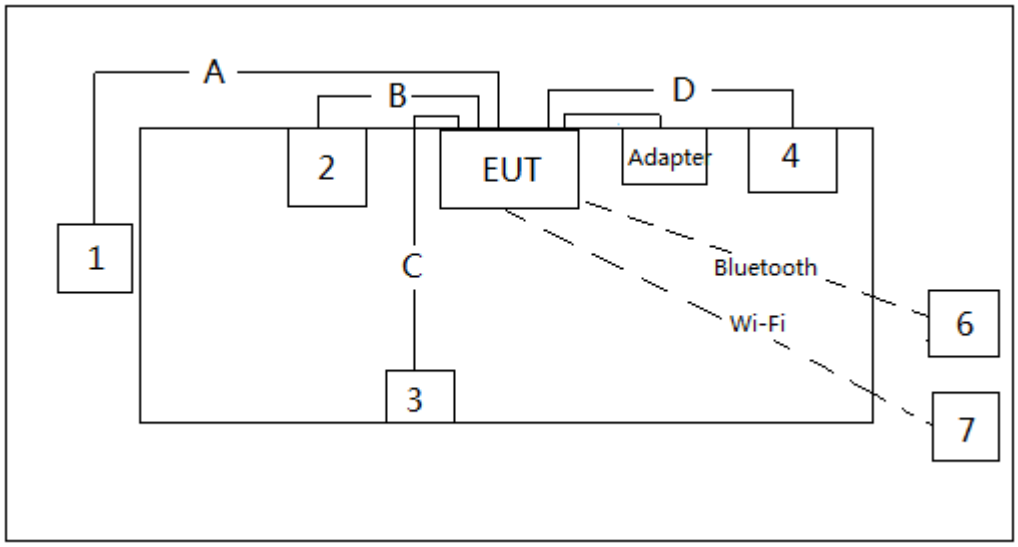

Connection Diagram - Mode 2: Communication (Powered by POE)
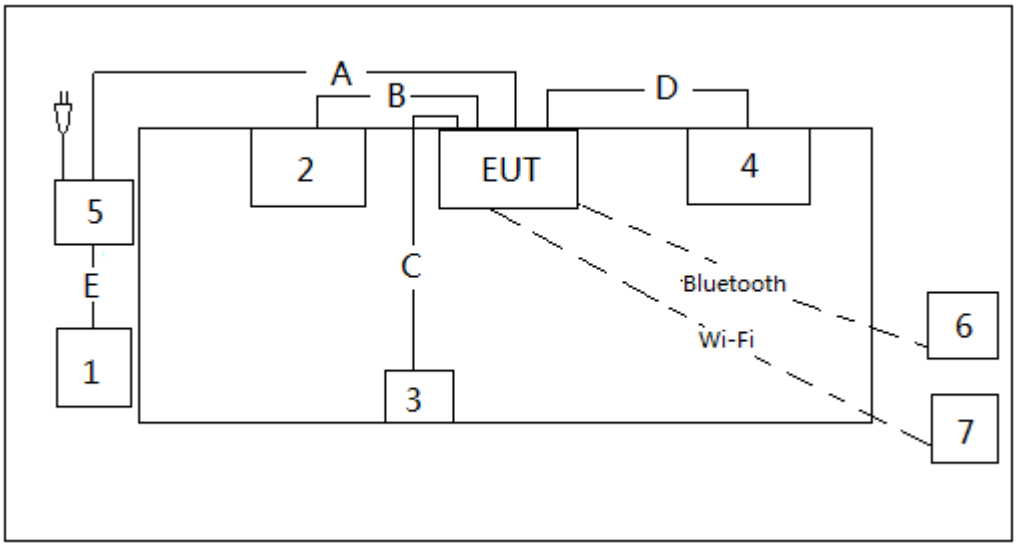

Signal Cable Type		Signal cable Description
A	LAN Cable	Non-shielding, >10m
B	HDMI Cable	Shielding, 1.5m
C	USB Cable	Shielded, 1.5m
D	LAN Cable	Non-shielding, 1.5m
E	LAN Cable	Non-shielding, 1.5m

Product		Manufacturer	Model No.	Serial No.	Power Cord
1	IP Multimedia Phone	Grandstream Networks, Inc.	GXV3240D	N/A	N/A
2	LCD Monitor	DELL	U2713Hb	N/A	Non-Shielded, 1.8m
3	USB Mouse	DELL	Vostro270	N/A	Non-Shielded, 1.8m
4	Notebook	Lenovo	E430c	MP-4CFX213/10	Non-Shielded, 1.8m
5	POE Switch	Lenovo	LS5004P	N/A	N/A
6	Headset	PLT	M165	N/A	N/A
7	Router	H3C	WA2620	N/A	N/A

Note: For the test mode 2, we tested the POE's AC adapter port for conducted emission.

2.3. Test Software

1	Setup the EUT and simulators as shown on above.
2	Turn on the power of all equipment.
3	(1), Making EUT camera on and set-up a VOIP call with another telephone by LAN cable. (2), Making the notebook connect with EUT through "PING" manner by LAN cable. (3), Making the EUT communicate with the router (7) by Wi-Fi and communicate with headset (6) by Bluetooth.

2.4. EMI Suppression Device(s)/Modifications

No EMI suppression device(s) were added and/or no modifications were made during testing.

2.5. Labeling Requirements

Per 2.1074 & 15.19; Docket 95-19

The label shall be permanently affixed at a conspicuous location on the device; instruction manual or pamphlet supplied to the user and be readily visible to the purchaser at the time of purchase. However, when the device is so small wherein placement of the label with specified statement is not practical, only the trade name and FCC ID must be displayed on the device per Section 15.19(a)(5). Please see attachment for FCC ID label and label location.

3. DESCRIPTION OF TEST

3.1. Evaluation Procedure

The measurement procedures described in the American National Standard for Methods of Measurement of Radio-Noise Emission from Low-Voltage Electrical Equipment in the Range of 9kHz to 40GHz (ANSI C63.4-2009) was used in the measurement of the **IP Multimedia Phone FCC ID: YZZGXV3240D.**

Deviation from measurement procedure…….....None

3.2. AC Line Conducted Emissions

The line-conducted facility is located inside an 8'x4'x4' shielded enclosure. A 1m x 2m wooden table 80cm high is placed 40cm away from the vertical wall and 80cm away from the sidewall of the shielded room. Two 10kHz-30MHz, 50Ω/50uH Line-Impedance Stabilization Networks (LISNs) are bonded to the shielded room floor. Power to the LISNs is filtered by external high-current high-insertion loss power line filters. These filters attenuate ambient signal noise from entering the measurement lines. These filters are also bonded to the shielded enclosure.

The EUT is powered from one LISN and the support equipment is powered from the second LISN. If the EUT is a DC-powered device, power will be derived from the source power supply it normally will be powered from and this supply line(s) will be connected to the second LISN. All interconnecting cables more than 1 meter were shortened to a 1 meter length by non-inductive bundling (serpentine fashion) and draped over the back edge of the test table. All cables were at least 40cm above the horizontal reference ground-plane. Power cables for support equipment were routed down to the second LISN while ensuring that that cables were not draped over the second LISN.

Sufficient time for the EUT, support equipment, and test equipment was allowed in order for them to warm up to their normal operating condition. The RF output of the LISN was connected to the receiver and exploratory measurements were made to determine the frequencies producing the maximum emission from the EUT. The receiver was scanned from 150 kHz to 30 MHz. The detector function was set to peak mode for exploratory measurements while the bandwidth of the analyzer was set to 9 kHz. The EUT, support equipment, and interconnecting cables were arranged and manipulated to maximize each emission. Each emission was also maximized by varying: power lines, the mode of operation or resolution, clock or data exchange speed, scrolling H pattern to the EUT and/or support equipment whichever determined the worst-case emission. Once the worst case emissions have been identified, the one EUT cable configuration/arrangement and mode of operation that produced these emissions are used for final measurements on the same test site.

Line conducted emissions test results are shown in Section 6.2.

3.3. Radiated Emissions

The radiated test facilities consisted of an indoor 3 meter semi-anechoic chamber used for final measurements and exploratory measurements, when necessary. The measurement area is contained within the semi-anechoic chamber which is shielded from any ambient interference. For measurements above 1GHz absorbers are arranged on the floor between the turn table and the antenna mast in such a way so as to maximize the reduction of reflections. For measurements below 1GHz, the absorbers are removed. An MF Model 210SS turntable is used for radiated measurement. It is a continuously rotatable, remote controlled, metallic turntable and 2 meters (6.56 ft.) in diameter. The turn table is flush with the raised floor of the chamber in order to maintain its function as a ground plane. An 80cm high PVC support structure is placed on top of the turntable.

For all measurements, the spectrum was scanned through all EUT azimuths and from 1 to 4 meter receive antenna height using a broadband antenna from 30 MHz up to the upper frequency shown in 15.33(b)(1) depending on the highest frequency generated or used in the device or on which the device operates or tunes. For frequencies above 1GHz, linearly polarized double ridge horn antennas were used. For frequencies below 30 MHz, a calibrated loop antenna was used. When exploratory measurements were necessary, they were performed at 1 meter test distance inside the semi-anechoic chamber using broadband antennas, broadband amplifiers, and spectrum analyzers to determine the frequencies and modes producing the maximum emissions. Sufficient time for the EUT, support equipment, and test equipment was allowed in order for them to warm up to their normal operating condition. The test set-up was placed on top of the 0.8 meter high, 1 x 1.5 meter table. The EUT, support equipment, and interconnecting cables were arranged and manipulated to maximize each emission. Appropriate precaution was taken to ensure that all emissions from the EUT were maximized and investigated. The system configuration, mode of operation, if applicable, turntable azimuth, and receive antenna height was noted for each frequency found.

Final measurements were made in the semi-anechoic chamber using calibrated, linearly polarized broadband and horn antennas. The test setup was configured to the setup that produced the worst case emissions. The spectrum analyzer was set to investigate all frequencies required for testing to compare the highest radiated disturbances with respect to the specified limits. The turntable containing the EUT was rotated through 360 degrees and the height of the receive antenna was varied 1 to 4 meters and stopped at the azimuth and height producing the maximum emission. Each emission was maximized by changing the orientation of the EUT through three orthogonal planes and changing the polarity of the receive antenna, whichever produced the worst-case emissions. According to 3dB beam-width of horn antenna, the horn antenna should be always directed to the EUT when rising height.

4. TEST EQUIPMENT CALIBRATION DATE

Conducted Emissions

Instrument	Manufacturer	Type No.	Serial No.	Cali. Interval	Cali. Due Date
EMI Test Receiver	R&S	ESR7	101209	1 year	2015/11/07
Two-Line V-Network	R&S	ENV216	101683	1 year	2015/11/07
Two-Line V-Network	R&S	ENV216	101684	1 year	2015/11/07
Temperature/ Meter Humidity	Anymetre	TH101B	SR2-01	1 year	2015/11/15

Radiated Emission

Instrument	Manufacturer	Type No.	Serial No.	Cali. Interval	Cali. Due Date
Spectrum Analyzer	Agilent	N9010A	MY5144016A	1 year	2015/01/04
Preamplifier	MRT	AP01G18	1310002	1 year	2015/10/06
TRILOG Antenna	Schwarzbeck	VULB9162	9162-047	1 year	2015/11/08
Broad-Band Horn Antenna	Schwarzbeck	BBHA9120D	9120D-1167	1 year	2015/11/08
Temperature/Humidity Meter	Anymetre	TH101B	AC1-01	1 year	2015/11/15

5. MEASUREMENT UNCERTAINTY

Where relevant, the following test uncertainty levels have been estimated for tests performed on the EUT as specified in CISPR 16-4-2. This uncertainty represents an expanded uncertainty expressed at approximately the 95% confidence level using a coverage factor of k = 2.

AC Conducted Emission Measurement
Measuring Uncertainty for a Level of Confidence of 95% (U=2Uc(y)): 150kHz~30MHz: ±3.5dB
Radiated Emission Measurement
Measuring Uncertainty for a Level of Confidence of 95% (U=2Uc(y)): Horizontal: 30MHz~1GHz: 4.07dB 1GHz~18GHz: 4.16 dB Vertical: 30MHz~1GHz: 4.18 dB 1GHz~18GHz: 4.76 dB

6. TEST RESULT

6.1. Summary

Product Name: **IP Multimedia Phone**
FCC ID: **YZZGXV3240D**
FCC Classification: **FCC Class B Digital Device (JBP)**
Test Mode: **Communication**

FCC Part Section(s)	Test Description	Test Result
15.107	Conducted Emissions	Pass
15.109	Radiated Emissions	Pass

6.2. Conducted Emission Measurement

6.2.1. Test Limit

FCC Part 15.107 Limits		
Frequency (MHz)	QP (dBμV)	AV (dBμV)
0.15 - 0.50	66 - 56	56 - 46
0.50 - 5.0	56	46
5.0 - 30	60	50

Note 1: The lower limit shall apply at the transition frequencies.

Note 2: The limit decreases linearly with the logarithm of the frequency in the range 0.15MHz to 0.5MHz.

6.2.2. Test Setup

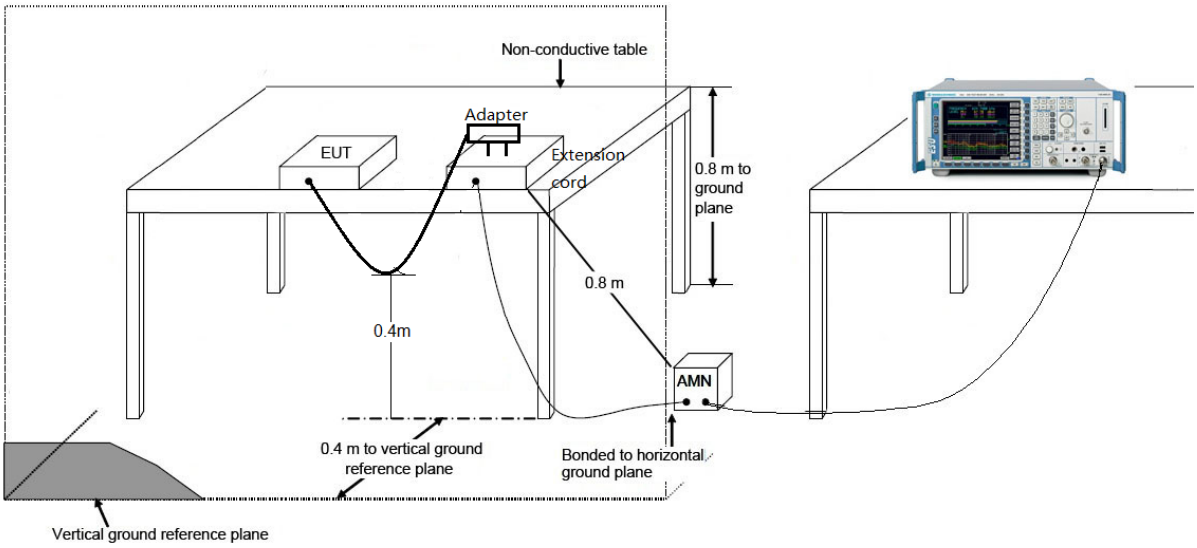

6.2.3. Test Result of Conducted Emissions

Site: SR2	Time: 2014/12/01 - 17:44
Limit: FCC_Part15.107_CE_AC Power_ClassB	Engineer: Milo Li
Probe: ENV216_101683_Filter On	Polarity: Line
EUT: IP Multimedia Phone	Power: AC 120V/60Hz
Note: Mode 1	

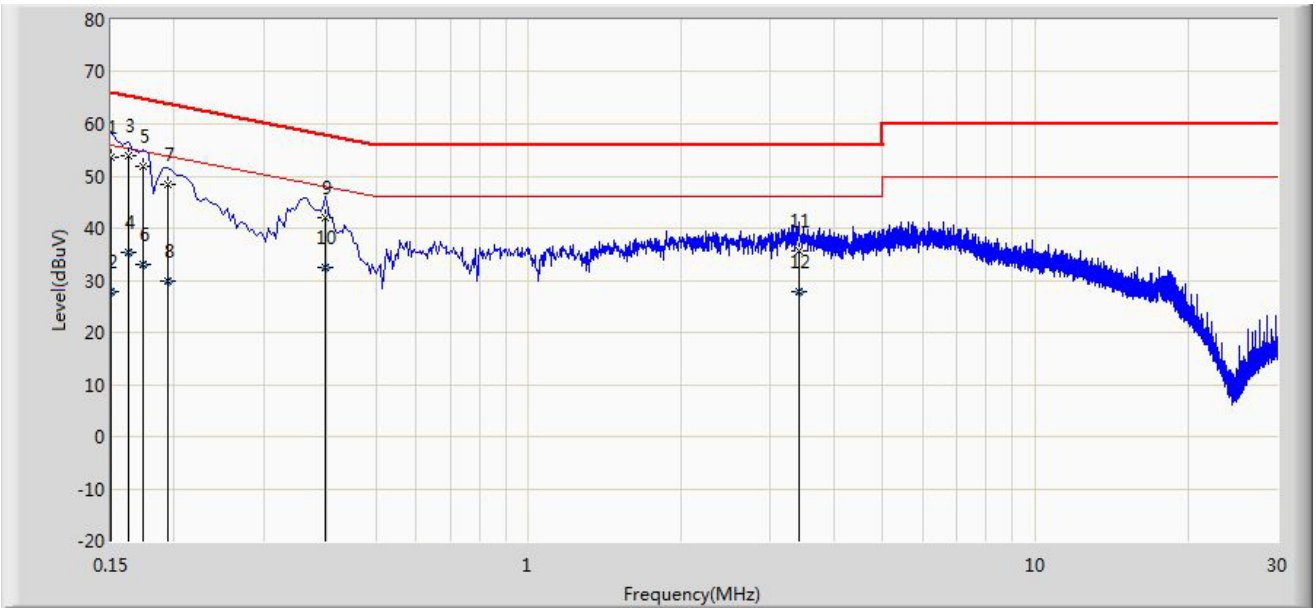

No	Mark	Frequency (MHz)	Measure Level (dBuV)	Reading Level (dBuV)	Over Limit (dB)	Limit (dBuV)	Factor (dB)	Type
1		0.150	53.557	42.388	-12.443	66.000	11.168	QP
2		0.150	27.703	16.535	-28.297	56.000	11.168	AV
3	*	0.162	53.807	43.710	-11.554	65.361	10.097	QP
4		0.162	35.506	25.409	-19.855	55.361	10.097	AV
5		0.174	51.879	41.811	-12.888	64.767	10.068	QP
6		0.174	33.139	23.072	-21.628	54.767	10.068	AV
7		0.194	48.499	38.482	-15.365	63.864	10.017	QP
8		0.194	29.963	19.946	-23.900	53.864	10.017	AV
9		0.398	42.125	32.042	-15.770	57.895	10.084	QP
10		0.398	32.544	22.460	-15.351	47.895	10.084	AV
11		3.410	35.590	25.689	-20.410	56.000	9.901	QP
12		3.410	27.937	18.036	-18.063	46.000	9.901	AV

Note: Measure Level (dBμV) = Reading Level (dBμV) + Factor (dB)

Factor (dB) = Cable Loss (dB) + LISN Factor (dB)

Site: SR2	Time: 2014/12/01 - 18:39
Limit: FCC_Part15.107_CE_AC Power_ClassB	Engineer: Milo Li
Probe: ENV216_101683_Filter On	Polarity: Neutral
EUT: IP Multimedia Phone	Power: AC 120V/60Hz
Note: Mode 1	

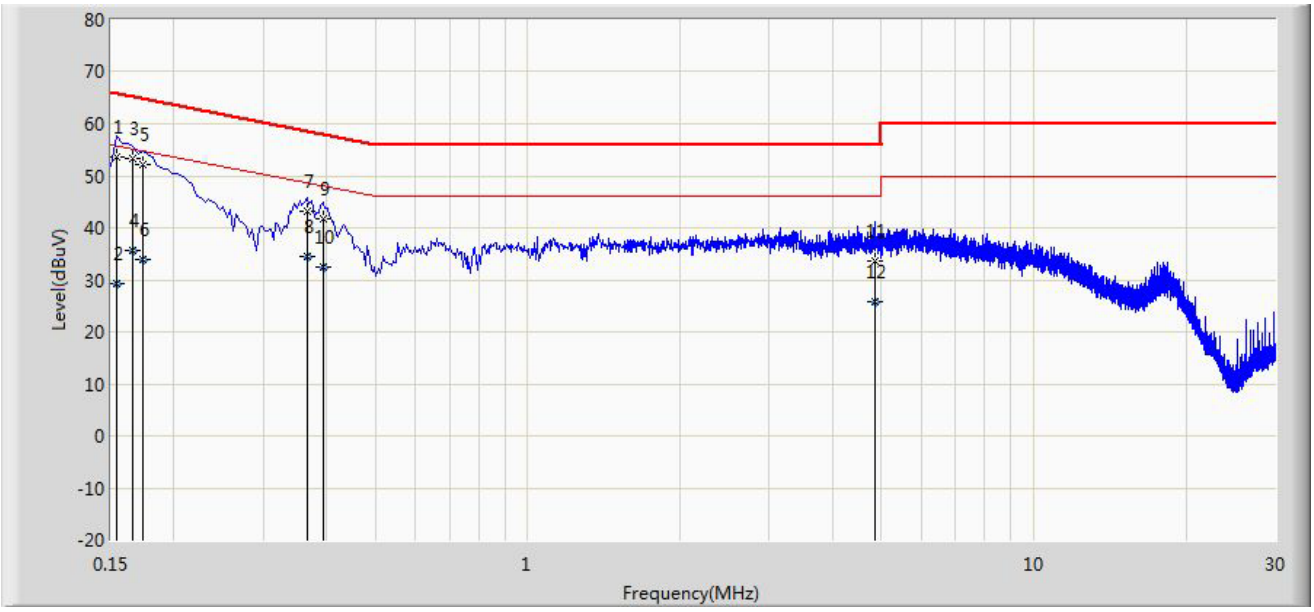

No	Mark	Frequency (MHz)	Measure Level (dBuV)	Reading Level (dBuV)	Over Limit (dB)	Limit (dBuV)	Factor (dB)	Type
1		0.154	53.483	42.767	-12.299	65.781	10.716	QP
2		0.154	29.362	18.646	-26.420	55.781	10.716	AV
3	*	0.166	53.202	43.130	-11.957	65.158	10.071	QP
4		0.166	35.743	25.672	-19.415	55.158	10.071	AV
5		0.174	52.103	42.047	-12.664	64.767	10.057	QP
6		0.174	33.888	23.831	-20.880	54.767	10.057	AV
7		0.366	43.053	32.966	-15.538	58.591	10.087	QP
8		0.366	34.535	24.448	-14.056	48.591	10.087	AV
9		0.394	41.880	31.772	-16.099	57.979	10.108	QP
10		0.394	32.391	22.284	-15.588	47.979	10.108	AV
11		4.842	33.630	23.595	-22.370	56.000	10.035	QP
12		4.842	25.817	15.782	-20.183	46.000	10.035	AV

Note: Measure Level (dBμV) = Reading Level (dBμV) + Factor (dB)

Factor (dB) = Cable Loss (dB) + LISN Factor (dB)

Site: SR2	Time: 2014/12/06 - 16:42
Limit: FCC_Part15.107_CE_AC Power_ClassB	Engineer: Milo Li
Probe: ENV216_101683_Filter On	Polarity: Line
EUT: IP Multimedia Phone	Power: AC 120V/60Hz
Note: Mode 2	

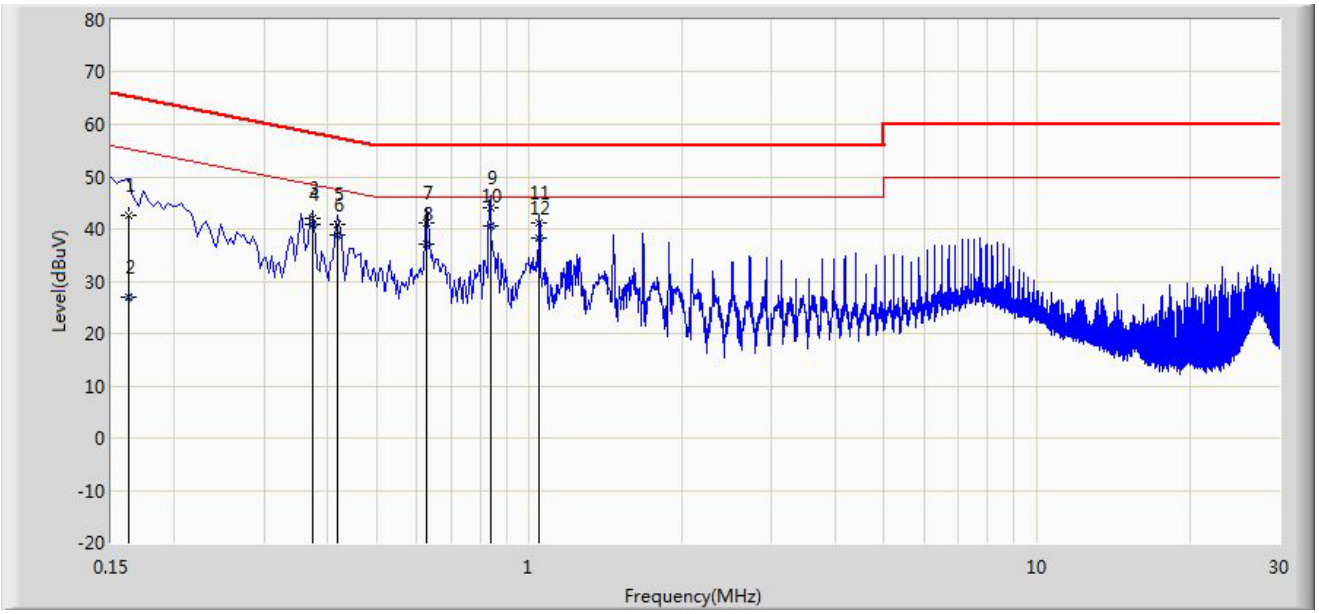

No	Mark	Frequency (MHz)	Measure Level (dBuV)	Reading Level (dBuV)	Over Limit (dB)	Limit (dBuV)	Factor (dB)	Type
1		0.162	42.513	32.416	-22.848	65.361	10.097	QP
2		0.162	26.875	16.778	-28.485	55.361	10.097	AV
3		0.374	41.910	31.845	-16.502	58.412	10.064	QP
4		0.374	40.869	30.804	-7.543	48.412	10.064	AV
5		0.418	40.893	30.793	-16.594	57.488	10.101	QP
6		0.418	38.925	28.825	-8.563	47.488	10.101	AV
7		0.626	41.301	31.200	-14.699	56.000	10.101	QP
8		0.626	37.202	27.100	-8.798	46.000	10.101	AV
9		0.838	44.166	34.174	-11.834	56.000	9.992	QP
10	*	0.838	40.581	30.589	-5.419	46.000	9.992	AV
11		1.046	41.125	31.218	-14.875	56.000	9.907	QP
12		1.046	38.363	28.456	-7.637	46.000	9.907	AV

Note: Measure Level (dBμV) = Reading Level (dBμV) + Factor (dB)

Factor (dB) = Cable Loss (dB) + LISN Factor (dB)

Site: SR2	Time: 2014/12/06 - 16:53
Limit: FCC_Part15.107_CE_AC Power_ClassB	Engineer: Milo Li
Probe: ENV216_101683_Filter On	Polarity: Neutral
EUT: IP Multimedia Phone	Power: AC 120V/60Hz
Note: Mode 2	

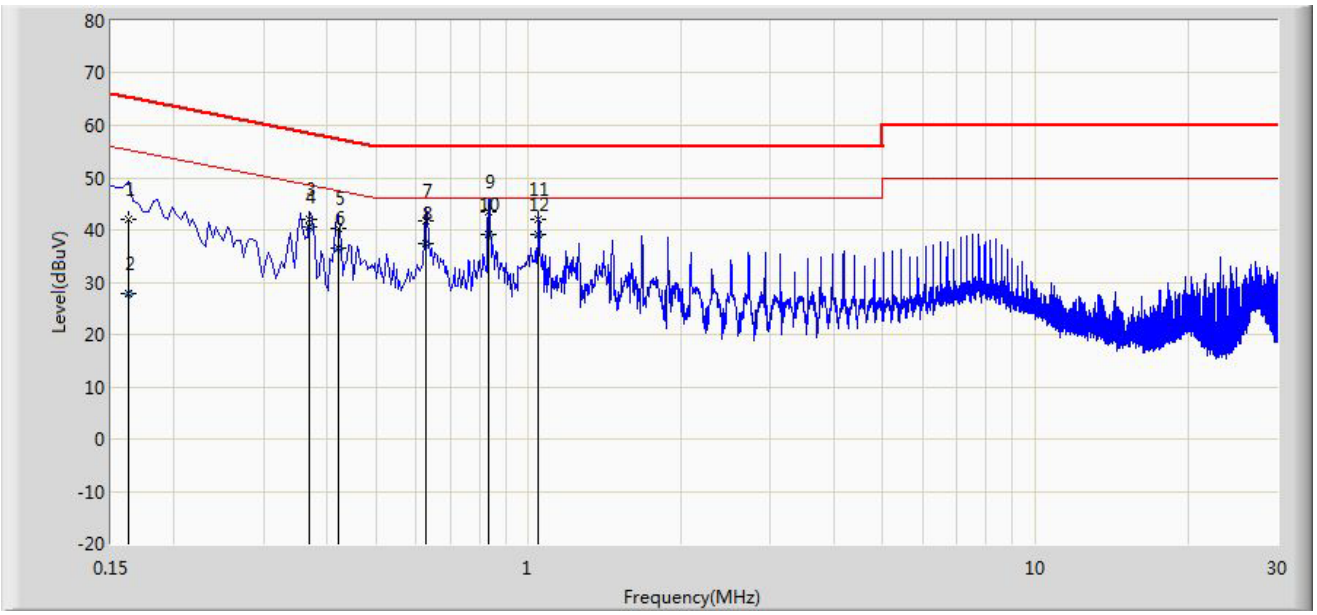

No	Mark	Frequency (MHz)	Measure Level (dBuV)	Reading Level (dBuV)	Over Limit (dB)	Limit (dBuV)	Factor (dB)	Type
1		0.162	42.090	32.012	-23.271	65.361	10.078	QP
2		0.162	27.957	17.879	-27.404	55.361	10.078	AV
3		0.370	42.142	32.052	-16.359	58.501	10.090	QP
4		0.370	40.571	30.481	-7.930	48.501	10.090	AV
5		0.422	40.398	30.269	-17.010	57.409	10.129	QP
6		0.422	36.555	26.426	-10.853	47.409	10.129	AV
7		0.626	41.687	31.570	-14.313	56.000	10.117	QP
8		0.626	37.514	27.397	-8.486	46.000	10.117	AV
9		0.834	43.422	33.422	-12.578	56.000	10.001	QP
10	*	0.834	39.210	29.209	-6.790	46.000	10.001	AV
11		1.046	41.893	31.986	-14.107	56.000	9.907	QP
12		1.046	39.049	29.141	-6.951	46.000	9.907	AV

Note: Measure Level (dBμV) = Reading Level (dBμV) + Factor (dB)

Factor (dB) = Cable Loss (dB) + LISN Factor (dB)

6.3. Radiated Emission Measurement

6.3.1. Test Limit

FCC Part 15.109 Limits		
Frequency (MHz)	Distance (m)	Level (dBμV/m)
30 - 88	3	40
88 - 216	3	43.5
216 - 960	3	46
Above 960	3	54

Note 1: The lower limit shall apply at the transition frequency.

Note 2: Distance refers to the distance in meters between the measuring instrument antenna and the closed point of any part of the device or system.

Note 3: E field strength (dBμV/m) = 20 log E field strength (uV/m)

6.3.2. Test Setup

30MHz ~ 1GHz Test Setup:

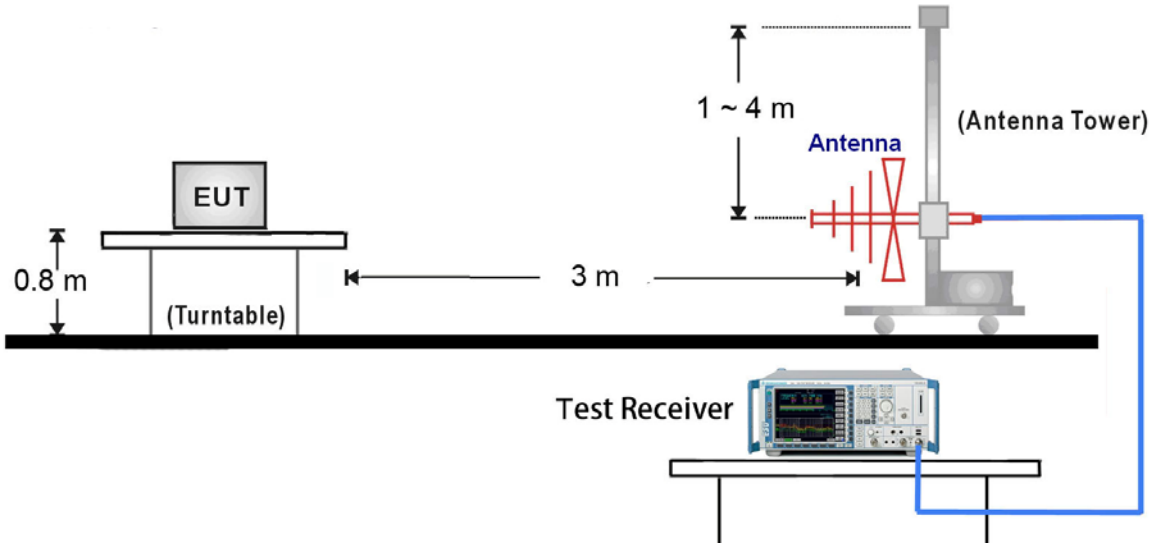

1GHz ~18GHz Test Setup:

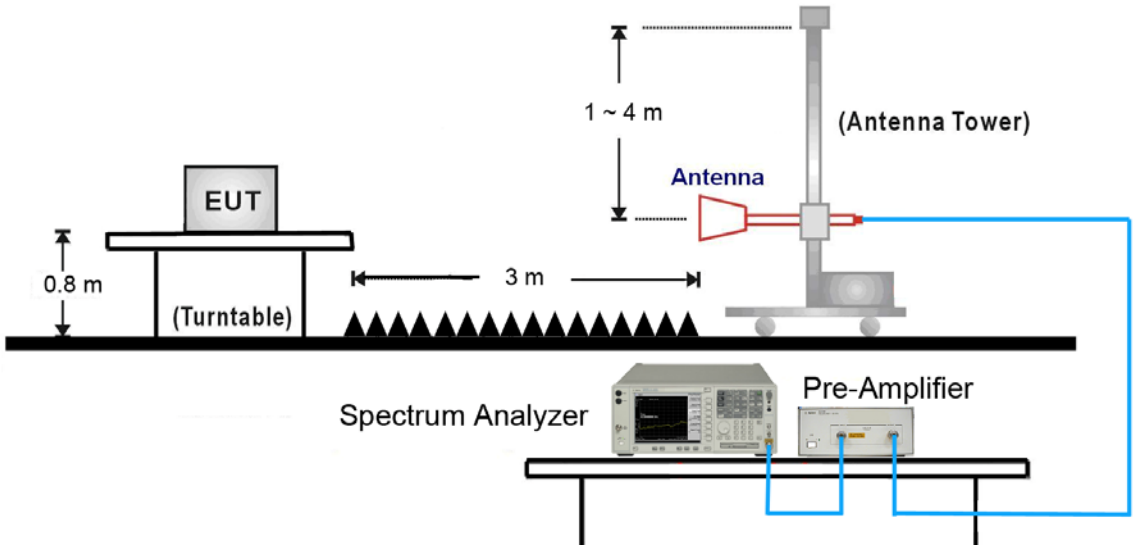

6.3.3. Test Result of Radiated Emissions

Site: AC1	Time: 2014/12/09 - 09:58
Limit: FCC_Part15.109_RE(3m)_ClassB	Engineer: Milo Li
Probe: VULB9162_0.03-8GHz	Polarity: Horizontal
EUT: IP Multimedia Phone	Power: AC 120V/60Hz
Note: Mode 1	

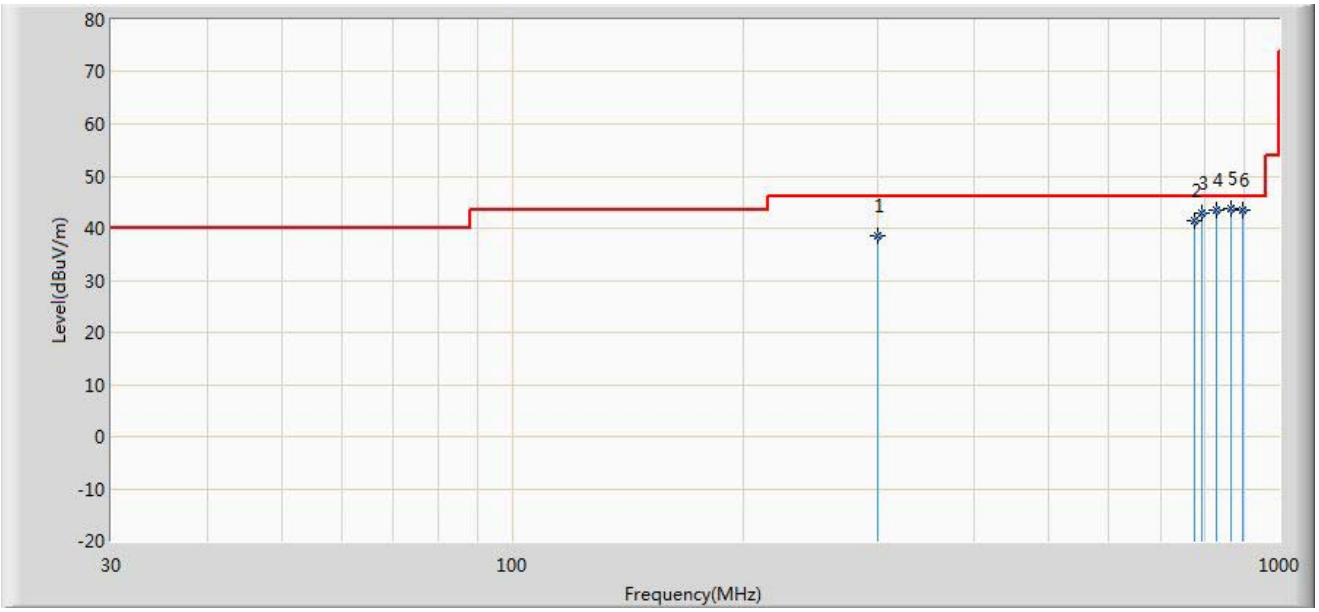

No	Mark	Frequency (MHz)	Measure Level (dBuV/m)	Reading Level (dBuV)	Over Limit (dB)	Limit (dBuV/m)	Factor (dB)	Type
1		300.004	38.683	24.558	-7.317	46.000	14.125	QP
2		774.018	41.377	19.580	-4.623	46.000	21.797	QP
3		792.115	42.893	20.884	-3.107	46.000	22.009	QP
4		828.105	43.486	20.948	-2.514	46.000	22.538	QP
5	*	864.088	43.673	20.640	-2.327	46.000	23.033	QP
6		894.401	43.587	20.297	-2.413	46.000	23.290	QP

Note: Measure Level (dBµV/m) = Reading Level (dBµV) + Factor (dB)

Factor (dB) = Cable Loss (dB) + Antenna Factor (dB/m)

Site: AC1	Time: 2014/12/09 - 10:00
Limit: FCC_Part15.109_RE(3m)_ClassB	Engineer: Milo Li
Probe: VULB9162_0.03-8GHz	Polarity: Vertical
EUT: IP Multimedia Phone	Power: AC 120V/60Hz
Note: Mode 1	

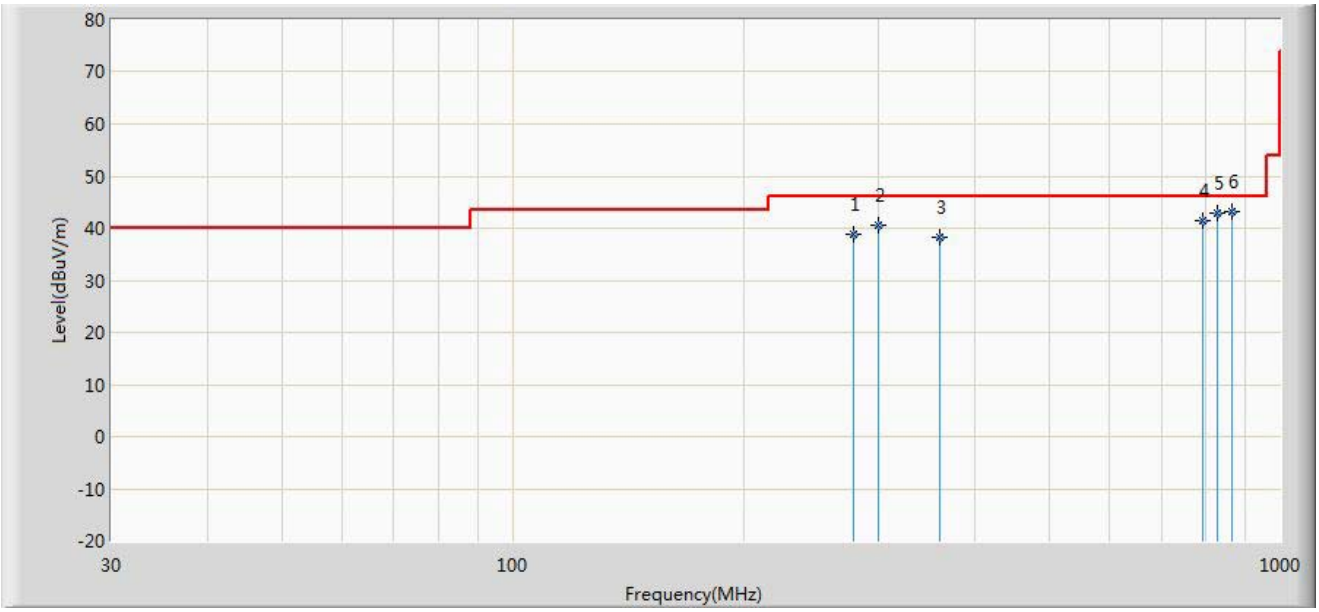

No	Mark	Frequency (MHz)	Measure Level (dBuV/m)	Reading Level (dBuV)	Over Limit (dB)	Limit (dBuV/m)	Factor (dB)	Type
1		278.105	38.800	25.040	-7.200	46.000	13.760	QP
2		300.102	40.541	26.414	-5.459	46.000	14.127	QP
3		360.081	38.128	22.610	-7.872	46.000	15.518	QP
4		792.081	41.519	19.510	-4.481	46.000	22.009	QP
5		828.092	42.827	20.290	-3.173	46.000	22.538	QP
6	*	864.102	43.257	20.224	-2.743	46.000	23.033	QP

Note: Measure Level (dBμV/m) = Reading Level (dBμV) + Factor (dB)

Factor (dB) = Cable Loss (dB) + Antenna Factor (dB/m)

Site: AC1	Time: 2014/12/09 - 09:50
Limit: FCC_Part15.109_RE(3m)_ClassB	Engineer: Milo Li
Probe: VULB9162_0.03-8GHz	Polarity: Horizontal
EUT: IP Multimedia Phone	Power: AC 120V/60Hz
Note: Mode 2	

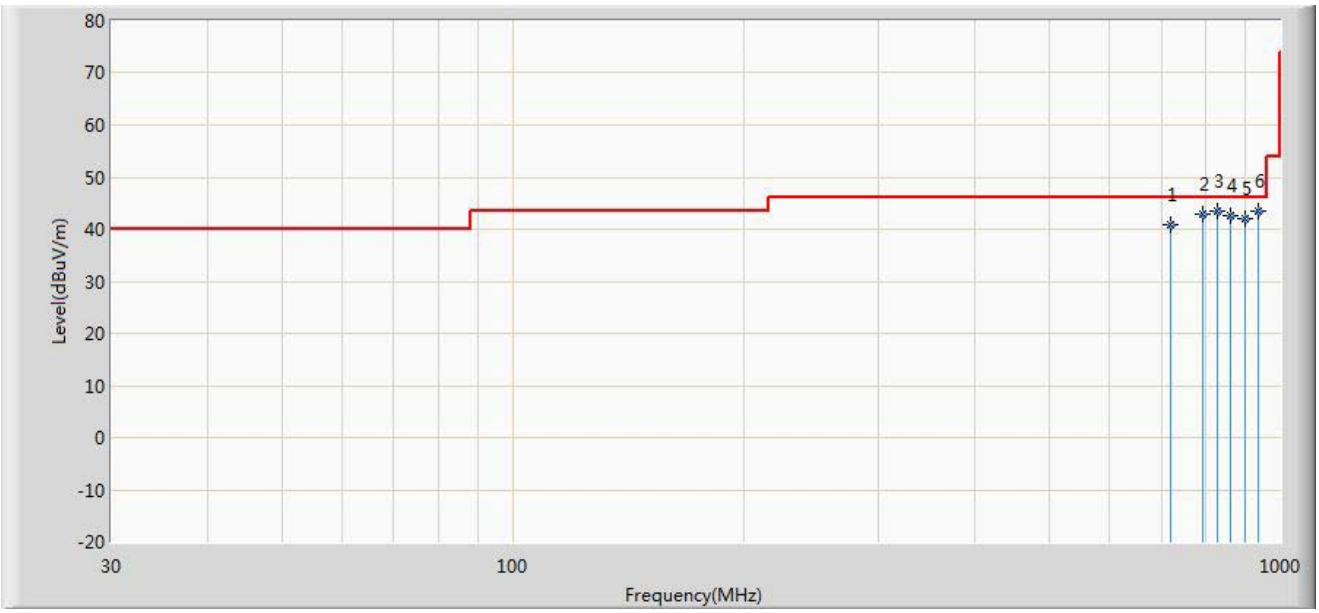

No	Mark	Frequency (MHz)	Measure Level (dBuV/m)	Reading Level (dBuV)	Over Limit (dB)	Limit (dBuV/m)	Factor (dB)	Type
1		720.061	40.735	19.570	-5.265	46.000	21.165	QP
2		792.086	43.000	20.991	-3.000	46.000	22.009	QP
3	*	828.072	43.427	20.890	-2.573	46.000	22.537	QP
4		863.357	42.543	19.520	-3.457	46.000	23.023	QP
5		900.106	41.999	18.680	-4.001	46.000	23.319	QP
6		936.108	43.378	19.840	-2.622	46.000	23.538	QP

Note: Measure Level (dBμV/m) = Reading Level (dBμV) + Factor (dB)

Factor (dB) = Cable Loss (dB) + Antenna Factor (dB/m)

Site: AC1	Time: 2014/12/09 - 09:52
Limit: FCC_Part15.109_RE(3m)_ClassB	Engineer: Milo Li
Probe: VULB9162_0.03-8GHz	Polarity: Vertical
EUT: IP Multimedia Phone	Power: AC 120V/60Hz
Note: Mode 2	

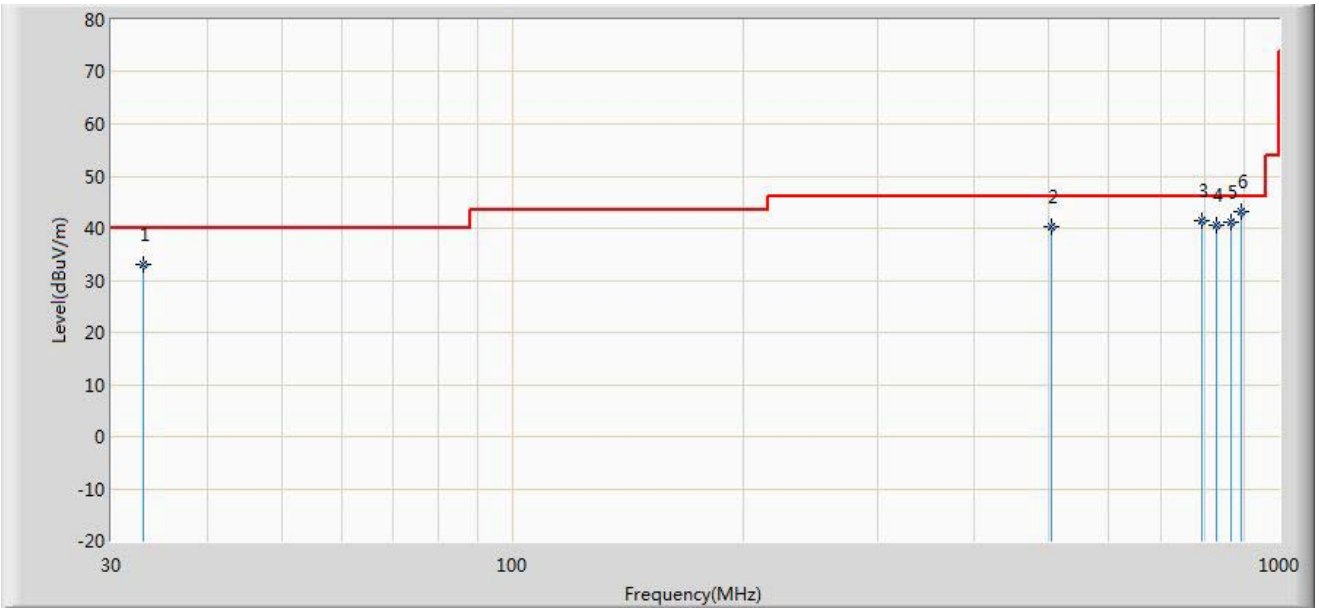

No	Mark	Frequency (MHz)	Measure Level (dBuV/m)	Reading Level (dBuV)	Over Limit (dB)	Limit (dBuV/m)	Factor (dB)	Type
1		33.069	33.168	20.710	-6.832	40.000	12.458	QP
2		504.011	40.243	22.447	-5.757	46.000	17.796	QP
3		792.113	41.568	19.559	-4.432	46.000	22.009	QP
4		828.077	40.599	18.062	-5.401	46.000	22.537	QP
5		864.082	41.293	18.260	-4.707	46.000	23.033	QP
6	*	894.102	43.171	19.884	-2.829	46.000	23.287	QP

Note: Measure Level (dBμV/m) = Reading Level (dBμV) + Factor (dB)

Factor (dB) = Cable Loss (dB) + Antenna Factor (dB/m)

Site: AC1	Time: 2014/12/09 - 10:04
Limit: FCC_Part15.109_RE(3m)_ClassB	Engineer: Milo Li
Probe: BBHA9120D_1-18GHz	Polarity: Horizontal
EUT: IP Multimedia Phone	Power: AC 120V/60Hz
Note: Mode 1	

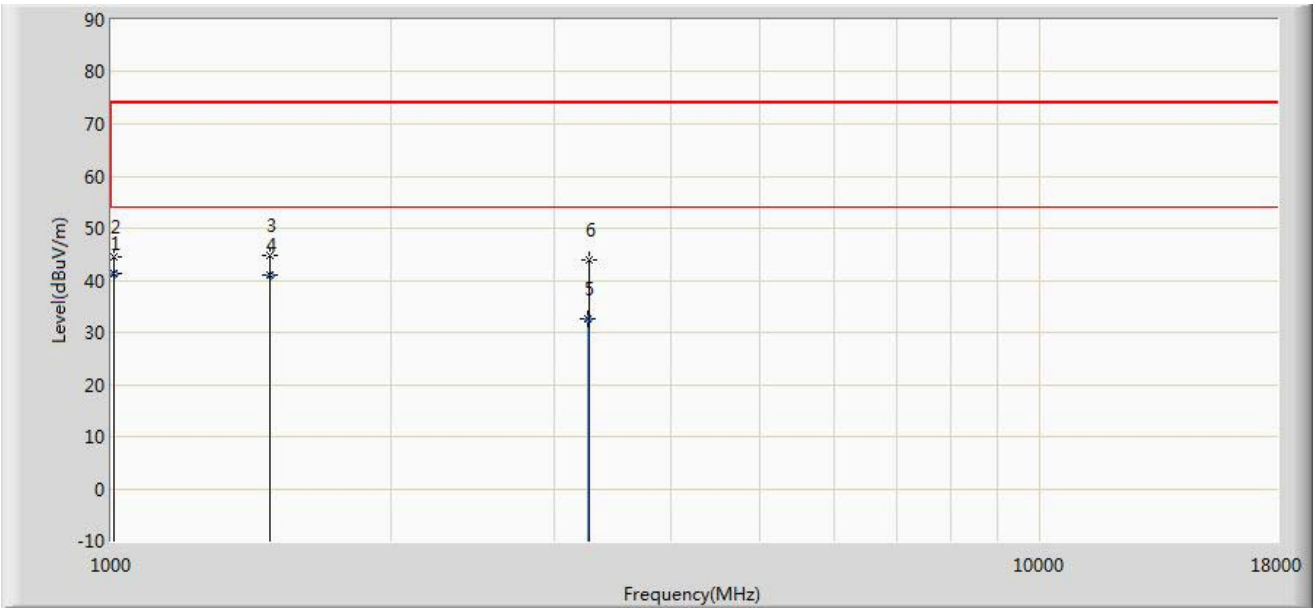

No	Mark	Frequency (MHz)	Measure Level (dBuV/m)	Reading Level (dBuV)	Over Limit (dB)	Limit (dBuV/m)	Factor (dB)	Type
1	*	1007.896	41.174	44.330	-12.826	54.000	-3.155	AV
2		1008.500	44.366	47.524	-29.634	74.000	-3.158	PK
3		1484.500	44.728	46.052	-29.272	74.000	-1.324	PK
4		1485.091	41.127	42.450	-12.873	54.000	-1.323	AV
5		3263.814	32.654	29.330	-21.346	54.000	3.324	AV
6		3269.500	43.797	40.491	-30.203	74.000	3.306	PK

Note: Measure Level (dBµV/m) = Reading Level (dBµV) + Factor (dB)

Factor (dB) = Cable Loss (dB) + Antenna Factor (dB/m) - Pre_Amplifier Gain (dB)

Site: AC1	Time: 2014/12/09 - 10:04
Limit: FCC_Part15.109_RE(3m)_ClassB	Engineer: Milo Li
Probe: BBHA9120D_1-18GHz	Polarity: Vertical
EUT: IP Multimedia Phone	Power: AC 120V/60Hz
Note: Mode 1	

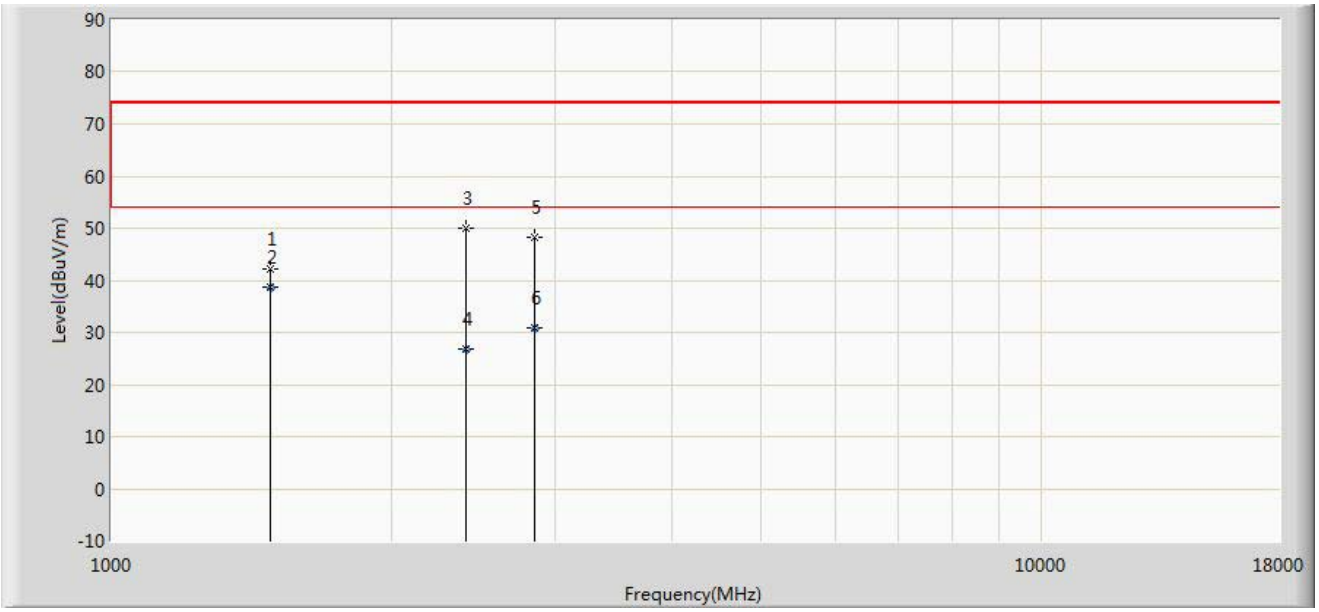

No	Mark	Frequency (MHz)	Measure Level (dBuV/m)	Reading Level (dBuV)	Over Limit (dB)	Limit (dBuV/m)	Factor (dB)	Type
1		1484.500	42.294	43.618	-31.706	74.000	-1.324	PK
2	*	1485.076	38.837	40.160	-15.163	54.000	-1.323	AV
3		2402.500	49.985	47.285	-24.015	74.000	2.700	PK
4		2403.093	26.750	24.050	-27.250	54.000	2.699	AV
5		2853.000	48.371	45.077	-25.629	74.000	3.294	PK
6		2855.445	30.738	27.440	-23.262	54.000	3.298	AV

Note: Measure Level (dBμV/m) = Reading Level (dBμV) + Factor (dB)

Factor (dB) = Cable Loss (dB) + Antenna Factor (dB/m) - Pre_Amplifier Gain (dB)

Site: AC1	Time: 2014/12/09 - 10:04
Limit: FCC_Part15.109_RE(3m)_ClassB	Engineer: Milo Li
Probe: BBHA9120D_1-18GHz	Polarity: Horizontal
EUT: IP Multimedia Phone	Power: AC 120V/60Hz
Note: Mode 2	

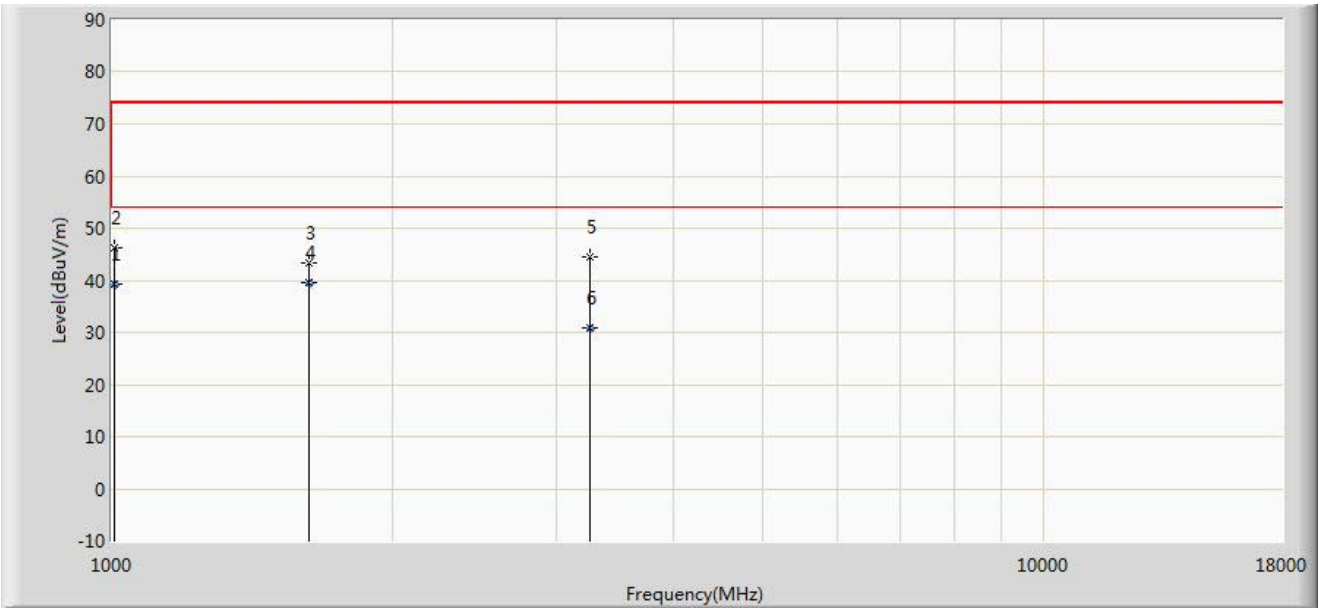

No	Mark	Frequency (MHz)	Measure Level (dBuV/m)	Reading Level (dBuV)	Over Limit (dB)	Limit (dBuV/m)	Factor (dB)	Type
1		1008.302	39.252	42.410	-14.748	54.000	-3.158	AV
2		1008.500	46.209	49.367	-27.791	74.000	-3.158	PK
3		1629.000	43.307	44.373	-30.693	74.000	-1.066	PK
4	*	1629.460	39.524	40.590	-14.476	54.000	-1.066	AV
5		3261.000	44.523	41.190	-29.477	74.000	3.333	PK
6		3262.140	30.810	27.480	-23.190	54.000	3.329	AV

Note: Measure Level (dBµV/m) = Reading Level (dBµV) + Factor (dB)

Factor (dB) = Cable Loss (dB) + Antenna Factor (dB/m) - Pre_Amplifier Gain (dB)

Site: AC1	Time: 2014/12/09 - 10:04
Limit: FCC_Part15.109_RE(3m)_ClassB	Engineer: Milo Li
Probe: BBHA9120D_1-18GHz	Polarity: Vertical
EUT: IP Multimedia Phone	Power: AC 120V/60Hz
Note: Mode 2	

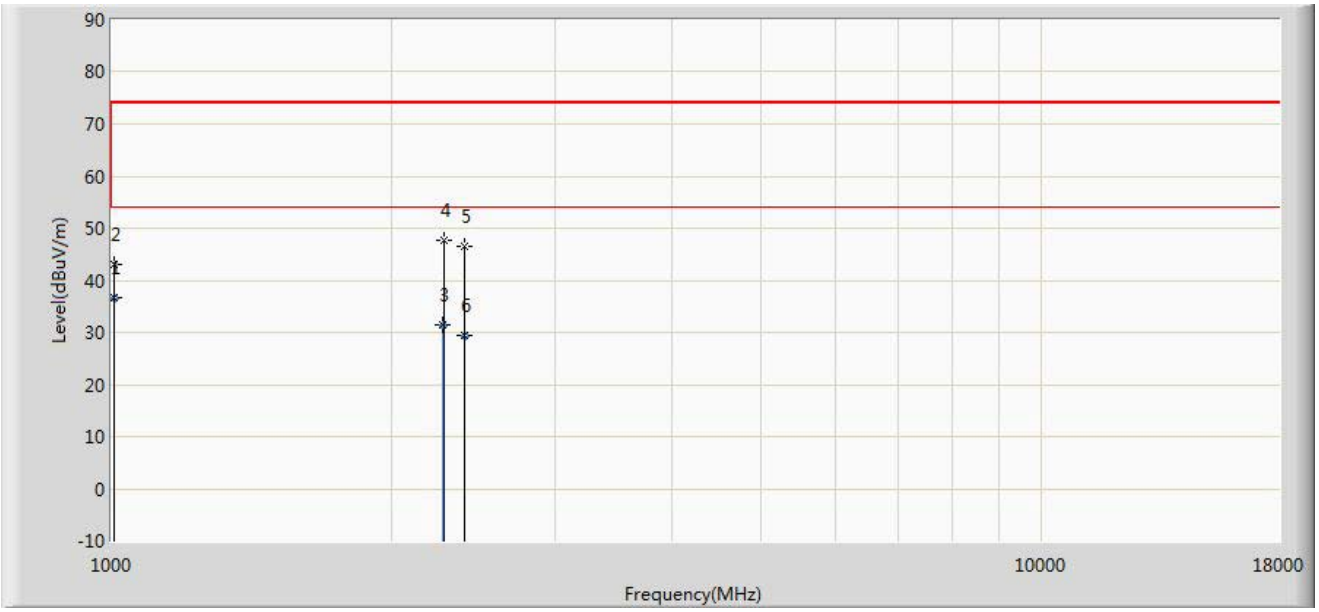

No	Mark	Frequency (MHz)	Measure Level (dBuV/m)	Reading Level (dBuV)	Over Limit (dB)	Limit (dBuV/m)	Factor (dB)	Type
1	*	1007.840	36.715	39.870	-17.285	54.000	-3.155	AV
2		1008.500	43.124	46.282	-30.876	74.000	-3.158	PK
3		2274.840	31.471	28.410	-22.529	54.000	3.060	AV
4		2275.000	47.573	44.513	-26.427	74.000	3.060	PK
5		2394.000	46.528	43.815	-27.472	74.000	2.713	PK
6		2394.206	29.522	26.810	-24.478	54.000	2.712	AV

Note: Measure Level (dBμV/m) = Reading Level (dBμV) + Factor (dB)

Factor (dB) = Cable Loss (dB) + Antenna Factor (dB/m) - Pre_Amplifier Gain (dB)

7. CONCLUSION

The data collected relate only the item(s) tested and show that the **IP Multimedia Phone FCC ID: YZZGXV3240D** has been tested to comply with the requirements specified in §15.107 and §15.109 of the FCC Rules.

The End