TEST REPORT

Product	:	Air Temperature and Humidity Sensor
Trade mark	:	seeed studio
Model/Type reference	:	S2101
Serial Number	:	N/A
Report Number	:	EED32O81002003
FCC ID	:	Z4T-S210X
Date of Issue	:	Jul. 25, 2022
Test Standards	:	47 CFR Part 15 Subpart C
Test result	:	PASS

Prepared for:

Seeed Technology Co., Ltd.
9F, G3 Building, TCL International E City, Zhongshanyuan Road, Nanshan District, Shenzhen, Guangdong Province, P.R.C

Prepared by:

Centre Testing International Group Co., Ltd.
Hongwei Industrial Zone, Bao'an 70 District, Shenzhen, Guangdong, China
TEL: +86-755-3368 3668
FAX: +86-755-3368 3385

Compiled by: mark. chen. Mark Chen

Reviewed by: Tom Chen Tom Chen

Approved by: Aaron Ma Aaron Ma

Date of issue: Jul. 25, 2022

Check No.:5130070722

CENTRE TESTING INTERNATIONAL GROUP CO.,LTD. CTI Report Seal

1 Contents

Page

1 CONTENTS **2**

2 VERSION **3**

3 TEST SUMMARY **4**

4 GENERAL INFORMATION **5**

4.1 CLIENT INFORMATION 5
4.2 GENERAL DESCRIPTION OF EUT 5
4.3 TEST CONFIGURATION 7
4.4 TEST ENVIRONMENT 8
4.5 DESCRIPTION OF SUPPORT UNITS 9

5 TEST RESULTS AND MEASUREMENT DATA **12**

5.1 ANTENNA REQUIREMENT 12
5.2 MAXIMUM CONDUCTED OUTPUT POWER 13
5.3 20DB EMISSION BANDWIDTH 14
5.4 CARRIER FREQUENCY SEPARATION 15
5.5 NUMBER OF HOPPING CHANNEL 16
5.6 TIME OF OCCUPANCY 17
5.7 BAND EDGE MEASUREMENTS 18
5.8 CONDUCTED SPURIOUS EMISSIONS 19
5.9 RADIATED SPURIOUS EMISSION & RESTRICTED BANDS 20

6 APPENDIX A **31**

7 PHOTOGRAPHS OF TEST SETUP **32**

8 PHOTOGRAPHS OF EUT CONSTRUCTIONAL DETAILS **34**

2 Version

Version No.	Date	Description
00	Jul. 25, 2022	Original

3 Test Summary

Test Item	Test Requirement	Result
Antenna Requirement	47 CFR Part 15, Subpart C Section 15.203/15.247 (c)	PASS
AC Power Line Conducted Emission	47 CFR Part 15, Subpart C Section 15.207	N/A
Maximum Conducted Output Power	47 CFR Part 15, Subpart C Section 15.247 (b)(1)	PASS
20dB Emission Bandwidth	47 CFR Part 15, Subpart C Section 15.247 (a)(1)	PASS
Carrier Frequency Separation	47 CFR Part 15, Subpart C Section 15.247 (a)(1)	PASS
Number of Hopping Channels	47 CFR Part 15, Subpart C Section 15.247 (a)(1)	PASS
Time of Occupancy	47 CFR Part 15, Subpart C Section 15.247 (a)(1)	PASS
Pseudorandom Frequency Hopping Sequence	47 CFR Part 15, Subpart C Section 15.247(b)(4)	PASS
Band Edge Measurements	47 CFR Part 15, Subpart C Section 15.247(d)	PASS
Conducted Spurious Emissions	47 CFR Part 15, Subpart C Section 15.247(d)	PASS
Radiated Spurious emissions	47 CFR Part 15, Subpart C Section 15.205/15.209	PASS
Restricted bands around fundamental frequency	47 CFR Part 15, Subpart C Section 15.205/15.209	PASS

Remark:
Company Name and Address shown on Report, the sample(s) and sample Information were provided by the applicant who should be responsible for the authenticity which CTI hasn't verified.

4 General Information

4.1 Client Information

Applicant:	Seeed Technology Co., Ltd.
Address of Applicant:	9F, G3 Building, TCL International E City, Zhongshanyuan Road, Nanshan District, Shenzhen, Guangdong Province, P.R.C
Manufacturer:	Seeed Technology Co., Ltd.
Address of Manufacturer:	9F, G3 Building, TCL International E City, Zhongshanyuan Road, Nanshan District, Shenzhen, Guangdong Province, P.R.C
Factory:	Shenzhen Xinxian Technology Co., Limited
Address of Factory:	F5, Building B17, Hengfeng Industrial City, No. 739 Zhoushi Rd, Baoan District, Shenzhen, Guangdong, P.R.C.

4.2 General Description of EUT

Product Name:	Air Temperature and Humidity Sensor
Model No.:	S2101
Trade Mark:	seeed studio
Product Type:	Fix Location
Operation Frequency:	902MHz~928MHz
Modulation Technique:	Frequency Hopping Spread Spectrum(FHSS)
Modulation Type:	LoRa Chirp Spread Spectrum
Number of Channel:	64
Hopping Channel Type:	Adaptive Frequency Hopping systems
Antenna Type:	Shrapnel Antenna
Antenna Gain:	1.70 dBi
Power Supply:	DC 3.6V
Test Voltage:	DC 3.6V
Sample Received Date:	Jul. 07, 2022
Sample tested Date:	Jul. 07, 2022 to Jul. 20, 2022

Operation Frequency each of channel							
Channel	Frequency	Channel	Frequency	Channel	Frequency	Channel	Frequency
1	902.3MHz	21	906.3MHz	41	910.3MHz	61	914.3MHz
2	902.5MHz	22	906.5MHz	42	910.5MHz	62	914.5MHz
3	902.7MHz	23	906.7MHz	43	910.7MHz	63	914.7MHz
4	902.9MHz	24	906.9MHz	44	910.9MHz	64	914.9MHz
5	903.1MHz	25	907.1MHz	45	911.1MHz		
6	903.3MHz	26	907.3MHz	46	911.3MHz		
7	903.5MHz	27	907.5MHz	47	911.5MHz		
8	903.7MHz	28	907.7MHz	48	911.7MHz		
9	903.9MHz	29	907.9MHz	49	911.9MHz		
10	904.1MHz	30	908.1MHz	50	912.1MHz		
11	904.3MHz	31	908.3MHz	51	912.3MHz		
12	904.5MHz	32	908.5MHz	52	912.5MHz		
13	904.7MHz	33	908.7MHz	53	912.7MHz		
14	904.9MHz	34	908.9MHz	54	912.9MHz		
15	905.1MHz	35	909.1MHz	55	913.1MHz		
16	905.3MHz	36	909.3MHz	56	913.3MHz		
17	905.5MHz	37	909.5MHz	57	913.5MHz		
18	905.7MHz	38	909.7MHz	58	913.7MHz		
19	905.9MHz	39	909.9MHz	59	913.9MHz		
20	906.1MHz	40	910.1	60	914.1MHz		

Note:
In section 15.31(m), regards to the operating frequency range over 10 MHz, the Lowest frequency, the middle frequency, and the highest frequency of channel were selected to perform the test, and the selected channel see below:

Channel	Frequency
The Lowest channel	902.3MHz
The Middle channel	908.5MHz
The Highest channel	914.9MHz

4.3 Test Configuration

EUT Test Software Settings:		
Software:	sscom	
EUT Power Grade:	Power level is built-in set parameters and cannot be changed and selected	
Use test software to set the lowest frequency, the middle frequency and the highest frequency keep transmitting of the EUT.		
Mode	Channel	Frequency(MHz)
BW125KHz	CH1	902.3
	CH32	908.5
	CH64	914.9

4.4 Test Environment

Operating Environment:	
Radiated Spurious Emissions:	
Temperature:	22~25.0 °C
Humidity:	50~55 % RH
Atmospheric Pressure:	1010mbar
RF Conducted:	
Temperature:	22~25.0 °C
Humidity:	50~55 % RH
Atmospheric Pressure:	1010mbar

4.5 Description of Support Units

The EUT has been tested with associated equipment below.
support equipment

Description	Manufacturer	Model No.	Certification	Supplied by
Netbook	DELL	Latitude 3490	FCC&CE	CTI

4.6 Test Location

All tests were performed at:

Centre Testing International Group Co., Ltd
Building C, Hongwei Industrial Park Block 70, Bao'an District, Shenzhen, China
Telephone: +86 (0) 755 33683668 Fax:+86 (0) 755 33683385
No tests were sub-contracted.
FCC Designation No.: CN1164

4.7 Measurement Uncertainty (95% confidence levels, k=2)

No.	Item	Measurement Uncertainty
1	Radio Frequency	7.9×10^{-8}
2	RF power, conducted	0.46dB (30MHz-1GHz)
		0.55dB (1GHz-40GHz)
3	Radiated Spurious emission test	3.3dB (9kHz-30MHz)
		4.3dB (30MHz-1GHz)
		4.5dB (1GHz-18GHz)
		3.4dB (18GHz-40GHz)
4	Conduction emission	3.5dB (9kHz to 150kHz)
		3.1dB (150kHz to 30MHz)
5	Temperature test	0.64°C
6	Humidity test	3.8%
7	DC power voltages	0.026%

4.8 Equipment List

RF test system					
Equipment	**Manufacturer**	**Mode No.**	**Serial Number**	**Cal. Date (mm-dd-yyyy)**	**Cal. Due date (mm-dd-yyyy)**
Spectrum Analyzer	Keysight	N9010A	MY54510339	12-24-2021	12-23-2022
Signal Generator	Keysight	N5182B	MY53051549	12-24-2021	12-23-2022
Spectrum Analyzer	R&S	FSV40	101200	08-26-2021	08-25-2022
Signal Generator	Agilent	N5181A	MY46240094	12-24-2021	12-23-2022
DC Power	Keysight	E3642A	MY56376072	12-24-2021	12-23-2022
Power unit	R&S	OSP120	101374	12-24-2021	12-23-2022
RF control unit	JS Tonscend	JS0806-2	158060006	12-24-2021	12-23-2022
Communication test set	R&S	CMW500	120765	08-04-2021	08-03-2022
high-low temperature test chamber	Dong Guang Qin Zhuo	LK-80GA	QZ20150611879	12-24-2021	12-23-2022
Temperature/ Humidity Indicator	biaozhi	HM10	1804186	06-16-2022	06-15-2023
BT&WI-FI Automatic test software	JS Tonscend	JS1120-3	2.6.77.0518	---	---

3M Semi-anechoic Chamber (2)- Radiated disturbance Test					
Equipment	Manufacturer	Model	Serial No.	Cal. Date	Due Date
3M Chamber & Accessory Equipment	TDK	SAC-3	---	05/22/2022	05/21/2025
Receiver	R&S	ESCI7	100938-003	10/14/2021	10/13/2022
TRILOG Broadband Antenna	schwarzbeck	VULB 9163	9163-618	05/22/2022	05/21/2023
Multi device Controller	maturo	NCD/070/10711112	---	---	---
Horn Antenna	ETS-LINGREN	BBHA 9120D	9120D-1869	04/15/2021	04/14/2024
Loop Antenna	Schwarzbeck	FMZB 1519B	1519B-076	04-15-2021	04-14-2024
Microwave Preamplifier	Agilent	8449B	3008A02425	06/21/2022	06/20/2023

3M full-anechoic Chamber					
Equipment	**Manufacturer**	**Model No.**	**Serial Number**	**Cal. Date (mm-dd-yyyy)**	**Cal. Due date (mm-dd-yyyy)**
RSE Automatic test software	JS Tonscend	JS36-RSE	10166	---	---
Receiver	Keysight	N9038A	MY57290136	03-01-2022	02-28-2023
Spectrum Analyzer	Keysight	N9020B	MY57111112	02-23-2022	02-22-2023
Spectrum Analyzer	Keysight	N9030B	MY57140871	02-23-2022	02-22-2023
TRILOG Broadband Antenna	Schwarzbeck	VULB 9163	9163-1148	04-28-2021	04-27-2024
Horn Antenna	Schwarzbeck	BBHA 9170	9170-832	04-15-2021	04-14-2024
Horn Antenna	ETS-LINDGREN	3117	57407	07-04-2021	07-03-2024
Preamplifier	EMCI	EMC184055SE	980597	04-20-2022	04-19-2023
Preamplifier	EMCI	EMC001330	980563	04-01-2022	03-31-2023
Preamplifier	JS Tonscend	980380	EMC051845SE	12-24-2021	12-23-2022
Communication test set	R&S	CMW500	102898	12-24-2021	12-23-2022
Temperature/ Humidity Indicator	biaozhi	GM1360	EE1186631	04-11-2022	04-10-2023
Fully Anechoic Chamber	TDK	FAC-3	---	01-09-2021	01-08-2024
Cable line	Times	SFT205-NMSM-2.50M	394812-0001	---	---
Cable line	Times	SFT205-NMSM-2.50M	394812-0002	---	---
Cable line	Times	SFT205-NMSM-2.50M	394812-0003	---	---
Cable line	Times	SFT205-NMSM-2.50M	393495-0001	---	---
Cable line	Times	EMC104-NMNM-1000	SN160710	---	---
Cable line	Times	SFT205-NMSM-3.00M	394813-0001	---	---
Cable line	Times	SFT205-NMNM-1.50M	381964-0001	---	---
Cable line	Times	SFT205-NMSM-7.00M	394815-0001	---	---
Cable line	Times	HF160-KMKM-3.00M	393493-0001	---	---

5 Test results and Measurement Data

5.1 Antenna Requirement

Standard requirement:	47 CFR Part 15C Section 15.203 /247(c)
15.203 requirement: An intentional radiator shall be designed to ensure that no antenna other than that furnished by the responsible party shall be used with the device. The use of a permanently attached antenna or of an antenna that uses a unique coupling to the intentional radiator, the manufacturer may design the unit so that a broken antenna can be replaced by the user, but the use of a standard antenna jack or electrical connector is prohibited. 15.247(b) (4) requirement: The conducted output power limit specified in paragraph (b) of this section is based on the use of antennas with directional gains that do not exceed 6 dBi. Except as shown in paragraph (c) of this section, if transmitting antennas of directional gain greater than 6 dBi are used, the conducted output power from the intentional radiator shall be reduced below the stated values in paragraphs (b)(1), (b)(2), and (b)(3) of this section, as appropriate, by the amount in dB that the directional gain of the antenna exceeds 6 dBi.	
EUT Antenna:	Please see Internal photos
The antenna is Shrapnel Antenna. The best case gain of the antenna is 1.70dBi.	

5.2 Maximum Conducted Output Power

Test Requirement:	47 CFR Part 15C Section 15.247 (b)(1)
Test Method:	ANSI C63.10:2013
Test Setup:	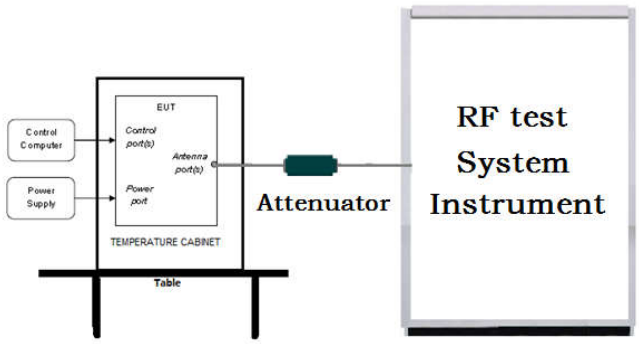 Remark: Offset=Cable loss+ attenuation factor.
Test Procedure:	Use the following spectrum analyzer settings: Span = approximately 5 times the 20 dB bandwidth, centered on a hopping channel RBW > the 20 dB bandwidth of the emission being measured VBW ≥ RBW Sweep = auto Detector function = peak Trace = max hold Allow the trace to stabilize. Use the marker-to-peak function to set the marker to the peak of the emission.
Limit:	21dBm
Exploratory Test Mode:	Non-hopping transmitting with all kind of modulation and all kind of data type
Test Results:	Refer to Appendix A

5.3 20dB Emission Bandwidth

Test Requirement:	47 CFR Part 15C Section 15.247 (a)(1)
Test Method:	ANSI C63.10:2013
Test Setup:	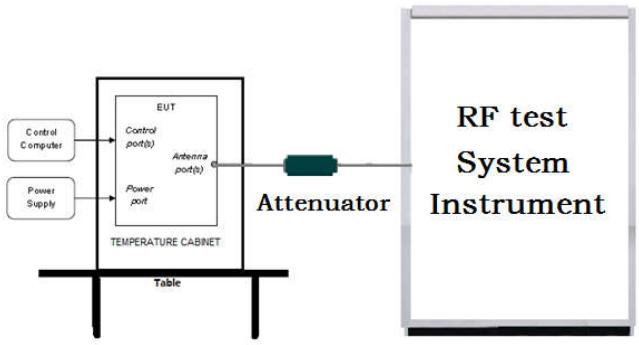 Remark: Offset=Cable loss+ attenuation factor.
Test Procedure:	1. The RF output of EUT was connected to the spectrum analyzer by RF cable and attenuator. The path loss was compensated to the results for each measurement. 2. Set to the maximum power setting and enable the EUT transmit continuously. 3. Use the following spectrum analyzer settings for 20dB Bandwidth measurement. Span = approximately 2 to 5 times the 20 dB bandwidth, centered on a hopping channel; 1%≤RBW ≤5% of the 20 dB bandwidth; VBW≥3RBW; Sweep = auto; Detector function = peak; Trace = max hold. 4. Measure and record the results in the test report.
Limit:	NA
Exploratory Test Mode:	Non-hopping transmitting with all kind of modulation and all kind of data type
Test Results:	Refer to Appendix A

5.4 Carrier Frequency Separation

Test Requirement:	47 CFR Part 15C Section 15.247 (a)(1)
Test Method:	ANSI C63.10:2013
Test Setup:	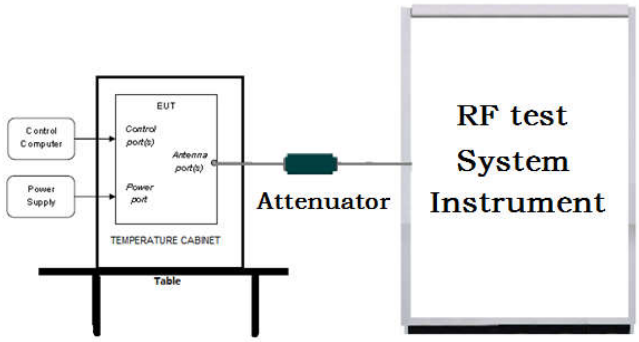 Remark: Offset=Cable loss+ attenuation factor.
Test Procedure:	1. The RF output of EUT was connected to the spectrum analyzer by RF cable and attenuator. The path loss was compensated to the results for each measurement. 2. Set to the maximum power setting and enable the EUT transmit continuously. 3. Enable the EUT hopping function. 4. Use the following spectrum analyzer settings: Span = wide enough to capture the peaks of two adjacent channels; RBW is set to approximately 30% of the channel spacing, adjust as necessary to best identify the center of each individual channel; VBW≥RBW; Sweep = auto; Detector function = peak; Trace = max hold. 5. Use the marker-delta function to determine the separation between the peaks of the adjacent channels. Record the value in report.
Limit:	Frequency hopping systems operating in the 2400-2483.5 MHz band may have hopping channel carrier frequencies that are separated by 25 kHz or two-thirds of the 20 dB bandwidth of the hopping channel, whichever is greater.
Exploratory Test Mode:	Hopping transmitting with all kind of modulation and all kind of data type
Test Results:	Refer to Appendix A

5.5 Number of Hopping Channel

Test Requirement:	47 CFR Part 15C Section 15.247 (a)(1)
Test Method:	ANSI C63.10:2013
Test Setup:	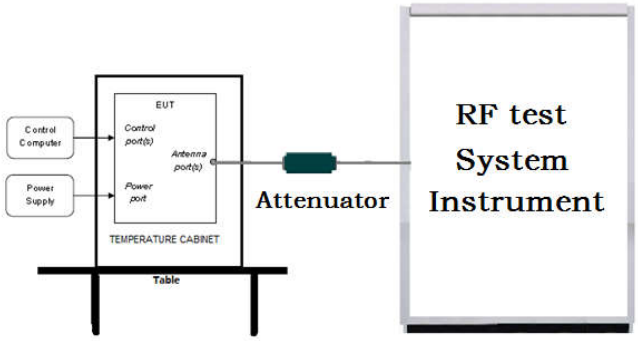 Remark: Offset=Cable loss+ attenuation factor.
Test Procedure:	1. The RF output of EUT was connected to the spectrum analyzer by RF cable and attenuator. The path loss was compensated to the results for each measurement. 2. Set to the maximum power setting and enable the EUT transmit continuously. 3. Enable the EUT hopping function. 4. Use the following spectrum analyzer settings: Span = the frequency band of operation; set the RBW to less than 30% of the channel spacing or the 20 dB bandwidth, whichever is smaller; VBW≥RBW; Sweep= auto; Detector function = peak; Trace = max hold. 5. The number of hopping frequency used is defined as the number of total channel. 6. Record the measurement data in report.
Limit:	Frequency hopping systems in the 2400-2483.5 MHz band shall use at least 15 channels.
Test Mode:	Hopping transmitting with all kind of modulation
Test Results:	Refer to Appendix A

5.6 Time of Occupancy

Test Requirement:	47 CFR Part 15C Section 15.247 (a)(1)
Test Method:	ANSI C63.10:2013
Test Setup:	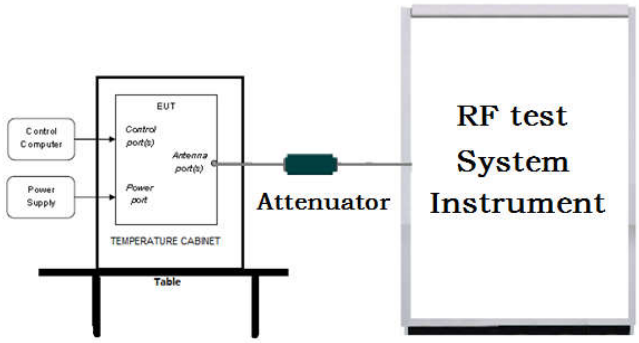 Remark: Offset=Cable loss+ attenuation factor.
Test Procedure:	1. The RF output of EUT was connected to the spectrum analyzer by RF cable and attenuator. The path loss was compensated to the results for each measurement. 2. Set to the maximum power setting and enable the EUT transmit continuously. 3. Enable the EUT hopping function. 4. Use the following spectrum analyzer settings: Span = zero span, centered on a hopping channel; RBW shall be ≤ channel spacing and where possible RBW should be set >> 1 / T, where T is the expected dwell time per channel; VBW≥RBW; Sweep = as necessary to capture the entire dwell time per hopping channel; Detector function = peak; Trace = max hold. 5. Measure and record the results in the test report.
Limit:	The average time of occupancy on any channel shall not be greater than 0.4 seconds within a period of 0.4 seconds multiplied by the number of hopping channels employed.
Test Mode:	Hopping transmitting with all kind of modulation and all kind of data type.
Test Results:	Refer to Appendix A

5.7 Band edge Measurements

Test Requirement:	47 CFR Part 15C Section 15.247 (d)
Test Method:	ANSI C63.10:2013
Test Setup:	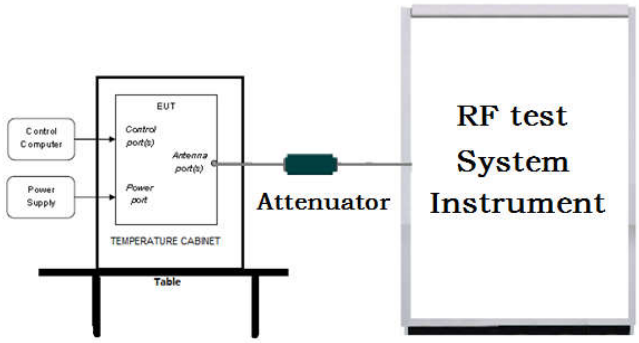 Remark: Offset=Cable loss+ attenuation factor.
Test Procedure:	1. Set to the maximum power setting and enable the EUT transmit continuously. 2. Set RBW = 100 kHz, VBW = 300 kHz (≥RBW). Band edge emissions must be at least 20 dB down from the highest emission level within the authorized band as measured with a 100kHz RBW. The attenuation shall be 30 dB instead of 20 dB when RMS conducted output power procedure is used. 3. Enable hopping function of the EUT and then repeat step 2 and 3. 4. Measure and record the results in the test report.
Limit:	In any 100 kHz bandwidth outside the frequency band in which the spread spectrum intentional radiator is operating, the radio frequency power that is produced by the intentional radiator shall be at least 20 dB below that in the 100 kHz bandwidth within the band that contains the highest level of the desired power, based on either an RF conducted or a radiated measurement.
Exploratory Test Mode:	Hopping and Non-hopping transmitting with all kind of modulation and all kind of data type
Test Results:	Refer to Appendix A

5.8 Conducted Spurious Emissions

Test Requirement:	47 CFR Part 15C Section 15.247 (d)
Test Method:	ANSI C63.10:2013
Test Setup:	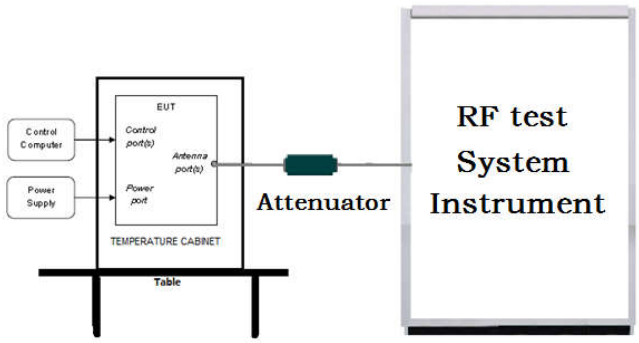 Remark: Offset=Cable loss+ attenuation factor.
Test Procedure:	1. The RF output of EUT was connected to the spectrum analyzer by RF cable and attenuator. The path loss was compensated to the results for each measurement. 2. Set to the maximum power setting and enable the EUT transmit continuously. 3. Set RBW = 100 kHz, VBW = 300kHz, scan up through 10th harmonic. All harmonics / spurs must be at least 20 dB down from the highest emission level within the authorized band as measured with a 100kHz RBW. 4. Measure and record the results in the test report. 5. The RF fundamental frequency should be excluded against the limit line in the operating frequency band.
Limit:	In any 100 kHz bandwidth outside the frequency band in which the spread spectrum intentional radiator is operating, the radio frequency power that is produced by the intentional radiator shall be at least 20 dB below that in the 100 kHz bandwidth within the band that contains the highest level of the desired power, based on either an RF conducted or a radiated measurement.
Exploratory Test Mode:	Non-hopping transmitting with all kind of modulation and all kind of data type
Test Results:	Refer to Appendix A

5.9 Radiated Spurious Emission & Restricted bands

Test Requirement:	47 CFR Part 15C Section 15.209 and 15.205
Test Method:	ANSI C63.10: 2013
Test Site:	Measurement Distance: 3m (Semi-Anechoic Chamber)
Receiver Setup:	

Frequency	Detector	RBW	VBW	Remark
0.009MHz-0.090MHz	Peak	10kHz	30kHz	Peak
0.009MHz-0.090MHz	Average	10kHz	30kHz	Average
0.090MHz-0.110MHz	Quasi-peak	10kHz	30kHz	Quasi-peak
0.110MHz-0.490MHz	Peak	10kHz	30kHz	Peak
0.110MHz-0.490MHz	Average	10kHz	30kHz	Average
0.490MHz -30MHz	Quasi-peak	10kHz	30kHz	Quasi-peak
30MHz-1GHz	Peak	100 kHz	300kHz	Peak
Above 1GHz	Peak	1MHz	3MHz	Peak
	Peak	1MHz	10kHz	Average

Limit:

Frequency	Field strength (microvolt/meter)	Limit (dBuV/m)	Remark	Measurement distance (m)
0.009MHz-0.490MHz	2400/F(kHz)	-	-	300
0.490MHz-1.705MHz	24000/F(kHz)	-	-	30
1.705MHz-30MHz	30	-	-	30
30MHz-88MHz	100	40.0	Quasi-peak	3
88MHz-216MHz	150	43.5	Quasi-peak	3
216MHz-960MHz	200	46.0	Quasi-peak	3
960MHz-1GHz	500	54.0	Quasi-peak	3
Above 1GHz	500	54.0	Average	3

Note: 15.35(b), Unless otherwise specified, the limit on peak radio frequency emissions is 20dB above the maximum permitted average emission limit applicable to the equipment under test. This peak limit applies to the total peak emission level radiated by the device.

Test Setup:	

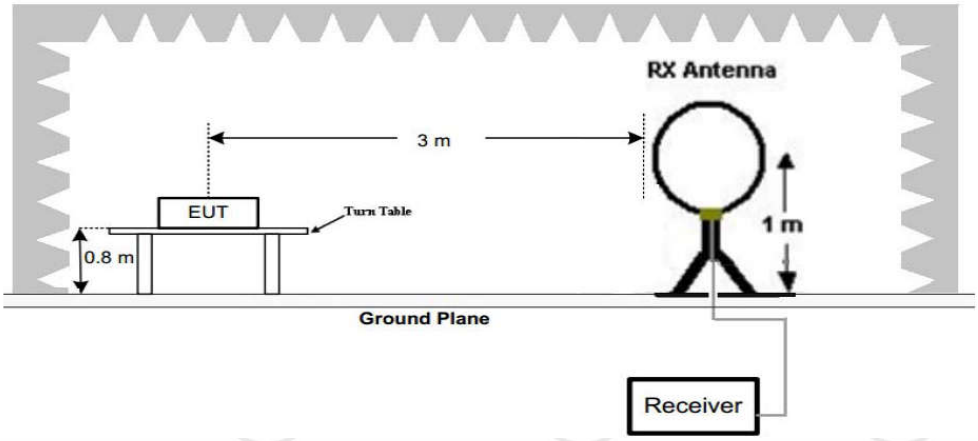

Figure 1. Below 30MHz

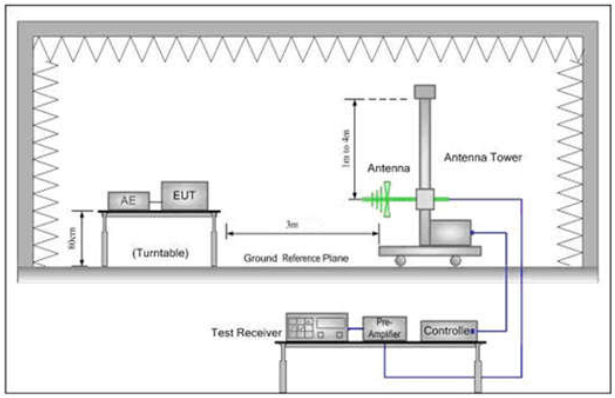

Figure 2. 30MHz to 1GHz

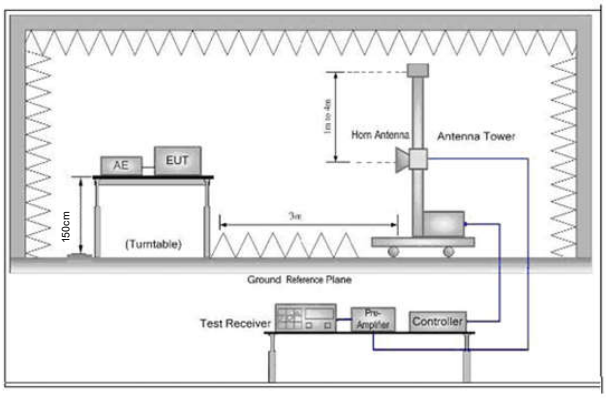

Figure 3. Above 1 GHz

Test Procedure:	a. 1) Below 1G: The EUT was placed on the top of a rotating table 0.8 meters above the ground at a 3 meter semi-anechoic camber. The table was rotated 360 degrees to determine the position of the highest radiation. 2) Above 1G: The EUT was placed on the top of a rotating table 1.5 meters above the ground at a 3 meter semi-anechoic camber. The table was rotated 360 degrees to determine the position of the highest radiation. Note: For the radiated emission test above 1GHz: Place the measurement antenna away from each area of the EUT determined to be a source of emissions at the specified measurement distance, while keeping the measurement antenna aimed at the source of emissions at each frequency of significant emissions, with polarization oriented for maximum response. The measurement antenna may have to be higher or lower than the EUT, depending on the radiation pattern of the emission and staying aimed at the emission source for receiving the maximum signal. The final measurement antenna elevation shall be that which maximizes the emissions. The measurement antenna elevation for maximum emissions shall be restricted to a range of heights of from 1 m to 4 m above the ground or reference ground plane. b. The EUT was set 3 meters away from the interference-receiving antenna, which was mounted on the top of a variable-height antenna tower. c. The antenna height is varied from one meter to four meters above the ground to determine the maximum value of the field strength. Both horizontal and vertical polarizations of the antenna are set to make the measurement. d. For each suspected emission, the EUT was arranged to its worst case and then the antenna was tuned to heights from 1 meter to 4 meters (for the test frequency of below 30MHz, the antenna was tuned to heights 1 meter) and the rotatable table was turned from 0 degrees to 360 degrees to find the maximum reading. e. The test-receiver system was set to Peak Detect Function and Specified Bandwidth with Maximum Hold Mode. f. If the emission level of the EUT in peak mode was 10dB lower than the limit specified, then testing could be stopped and the peak values of the EUT would be reported. Otherwise the emissions that did not have 10dB margin would be re-tested one by one using peak, quasi-peak or average method as specified and then reported in a data sheet. g. Test the EUT in the lowest channel (2402MHz),the middle channel (2441MHz),the Highest channel (2480MHz) h. The radiation measurements are performed in X, Y, Z axis positioning for Transmitting mode, and found the X axis positioning which it is the worst case. i. Repeat above procedures until all frequencies measured was complete.
Exploratory Test Mode:	Non-hopping transmitting mode with all kind of modulation and all kind of data type
Test Results:	Pass

Radiated Spurious Emission below 1GHz:

During the test, the Radiates Emission from 30MHz to 1GHz was performed in all modes, only the worst case lowest channel of LORA was recorded in the report.

Horizontal:

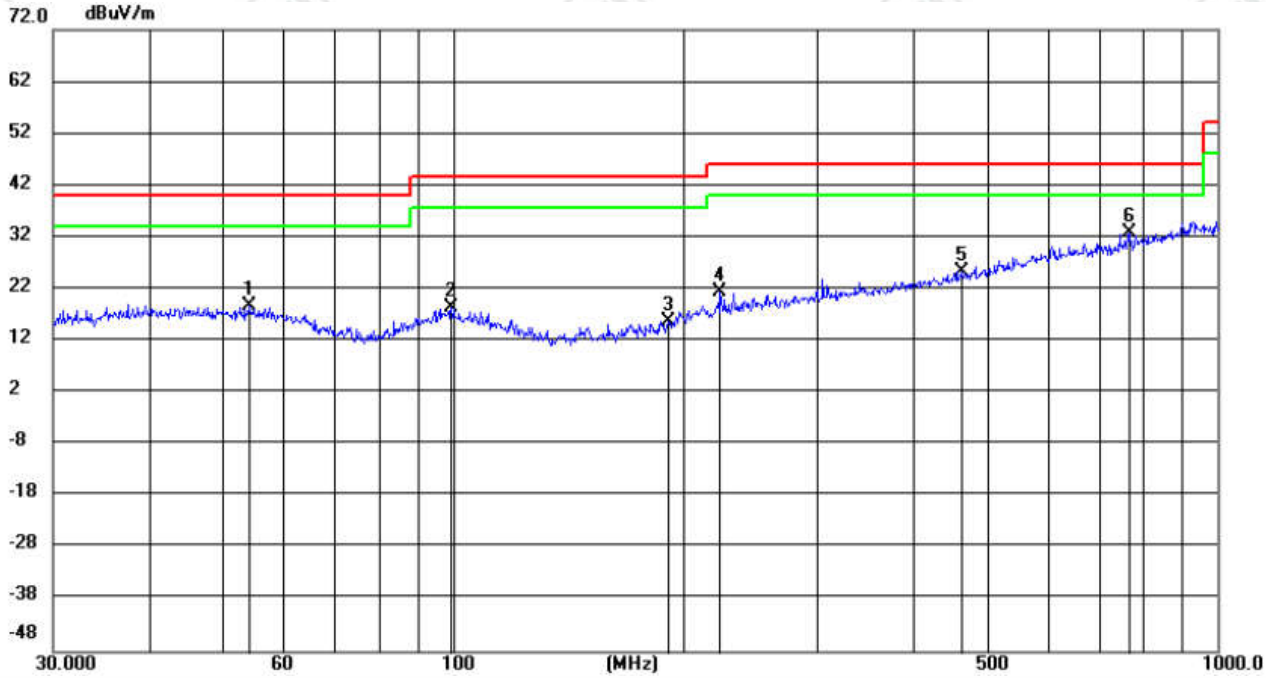

No.	Mk.	Freq.	Reading Level	Correct Factor	Measure-ment	Limit	Margin		Antenna Height	Table Degree	
		MHz	dBuV	dB	dBuV/m	dBuV/m	dB	Detector	cm	degree	Comment
1		54.0710	4.82	13.98	18.80	40.00	-21.20	peak	150	290	
2		99.5281	4.40	13.99	18.39	43.50	-25.11	peak	150	290	
3		191.0738	3.82	11.96	15.78	43.50	-27.72	peak	150	4	
4		223.7333	6.90	14.60	21.50	46.00	-24.50	peak	150	49	
5		462.3455	4.72	20.73	25.45	46.00	-20.55	peak	150	69	
6	*	766.0571	7.09	25.83	32.92	46.00	-13.08	peak	150	300	

Vertical:

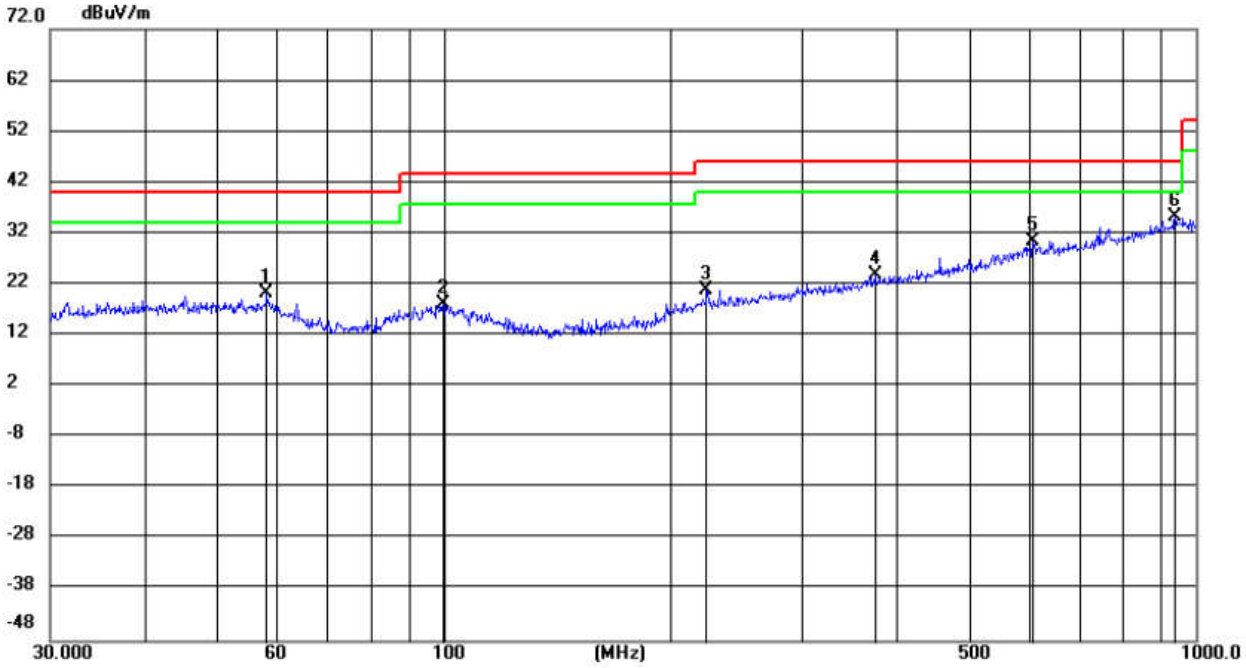

No.	Mk.	Freq.	Reading Level	Correct Factor	Measure-ment	Limit	Margin		Antenna Height	Table Degree	
		MHz	dBuV	dB	dBuV/m	dBuV/m	dB	Detector	cm	degree	Comment
1		58.2029	6.47	13.69	20.16	40.00	-19.84	peak	150	200	
2		99.8777	4.21	14.03	18.24	43.50	-25.26	peak	150	88	
3		223.7333	6.32	14.60	20.92	46.00	-25.08	peak	150	118	
4		374.6225	4.89	18.84	23.73	46.00	-22.27	peak	150	9	
5		607.7867	6.32	24.08	30.40	46.00	-15.60	peak	150	159	
6	*	938.8326	6.53	28.61	35.14	46.00	-10.86	peak	150	4	

Radiated Spurious Emission above 1GHz:

Mode:			LORA Transmitting			Channel:		902.3 MHz	
NO	Freq. [MHz]	Factor [dB]	Reading [dBμV]	Level [dBμV/m]	Limit [dBμV/m]	Margin [dB]	Result	Polarity	Remark
1	1332.4222	-26.72	70.02	43.30	74.00	30.70	Pass	H	PK
2	1804.6536	-24.67	75.01	50.34	74.00	23.66	Pass	H	PK
3	2706.5138	-22.24	66.93	44.69	74.00	29.31	Pass	H	PK
4	3997.7999	-18.86	61.99	43.13	74.00	30.87	Pass	H	PK
5	5413.8943	-14.36	68.90	54.54	74.00	19.46	Pass	H	PK
6	5414.4943	-14.36	65.18	50.82	54.00	3.18	Pass	H	AV
7	7467.8312	-11.36	60.37	49.01	74.00	24.99	Pass	H	PK
8	1331.2221	-26.72	75.35	48.63	74.00	25.37	Pass	V	PK
9	1804.6536	-24.67	73.01	48.34	74.00	25.66	Pass	V	PK
10	2885.3257	-21.71	64.82	43.11	74.00	30.89	Pass	V	PK
11	4482.6322	-17.15	61.83	44.68	74.00	29.32	Pass	V	PK
12	5413.8943	-14.36	67.45	53.09	74.00	20.91	Pass	V	PK
13	7817.6545	-11.49	61.32	49.83	74.00	24.17	Pass	V	PK

Mode:			LORA Transmitting			Channel:		908.7 MHz	
NO	Freq. [MHz]	Factor [dB]	Reading [dBμV]	Level [dBμV/m]	Limit [dBμV/m]	Margin [dB]	Result	Polarity	Remark
1	1330.6220	-26.72	67.48	40.76	74.00	33.24	Pass	H	PK
2	1817.2545	-24.60	72.76	48.16	74.00	25.84	Pass	H	PK
3	2560.7040	-22.76	64.38	41.62	74.00	32.38	Pass	H	PK
4	3710.3807	-20.09	63.45	43.36	74.00	30.64	Pass	H	PK
5	5451.6968	-14.37	67.44	53.07	74.00	20.93	Pass	H	PK
6	6907.9939	-11.99	61.01	49.02	74.00	24.98	Pass	H	PK
7	1330.6220	-26.72	72.00	45.28	74.00	28.72	Pass	V	PK
8	1817.2545	-24.60	72.37	47.77	74.00	26.23	Pass	V	PK
9	2771.3181	-21.98	65.00	43.02	74.00	30.98	Pass	V	PK
10	3989.3993	-18.90	61.85	42.95	74.00	31.05	Pass	V	PK
11	5452.2968	-14.37	66.89	52.52	74.00	21.48	Pass	V	PK
12	7694.6463	-10.93	61.86	50.93	74.00	23.07	Pass	V	PK

Mode:			LORA Transmitting			Channel:		914.9 MHz	
NO	Freq. [MHz]	Factor [dB]	Reading [dBμV]	Level [dBμV/m]	Limit [dBμV/m]	Margin [dB]	Result	Polarity	Remark
1	1331.8221	-26.72	70.73	44.01	74.00	29.99	Pass	H	PK
2	1829.8553	-24.54	71.58	47.04	74.00	26.96	Pass	H	PK
3	2947.7298	-21.56	65.23	43.67	74.00	30.33	Pass	H	PK
4	4326.6218	-17.00	62.42	45.42	74.00	28.58	Pass	H	PK
5	5489.4993	-14.37	66.08	51.71	74.00	22.29	Pass	H	PK
6	7218.8146	-12.01	60.82	48.81	74.00	25.19	Pass	H	PK
7	1330.6220	-26.72	74.77	48.05	74.00	25.95	Pass	V	PK
8	1829.8553	-24.54	71.21	46.67	74.00	27.33	Pass	V	PK
9	2999.3333	-21.41	66.11	44.70	74.00	29.30	Pass	V	PK
10	4315.8211	-17.04	62.29	45.25	74.00	28.75	Pass	V	PK
11	5489.4993	-14.37	67.82	53.45	74.00	20.55	Pass	V	PK
12	7343.0229	-11.59	61.05	49.46	74.00	24.54	Pass	V	PK

Remark:

1) The field strength is calculated by adding the Antenna Factor, Cable Factor & Preamplifier. The basic equation with a sample calculation is as follows:
   Final Test Level =Receiver Reading + Antenna Factor + Cable Factor – Preamplifier Factor
2) Scan from 9kHz to 25GHz, the disturbance above 10GHz and below 30MHz was very low. As shown in this section, for frequencies above 1GHz, the field strength limits are based on average limits. However, the peak field strength of any emission shall not exceed the maximum permitted average limits specified above by more than 20 dB under any condition of modulation. So, only the peak measurements were shown in the report.

Restricted bands:

Test plot as follows:

Mode:	LORA Transmitting	Channel:	902.3MHz
Polarity:	Horizontal		

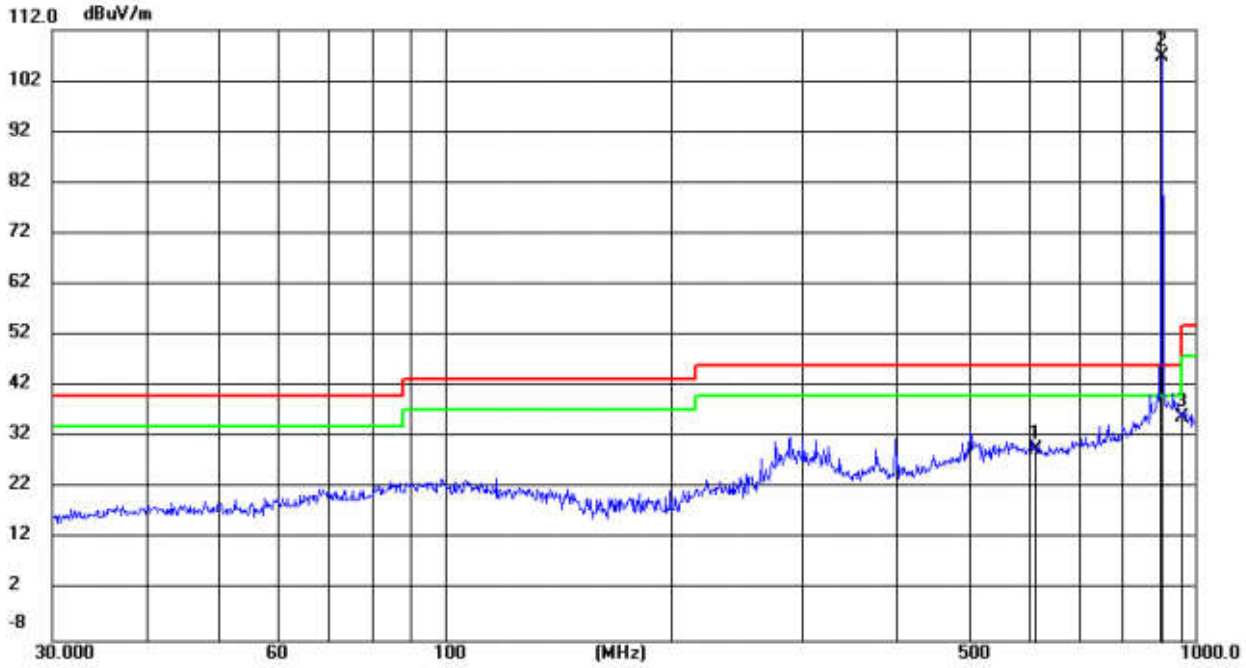

No.	Mk.	Freq.	Reading Level	Correct Factor	Measure-ment	Limit	Margin		Antenna Height	Table Degree	
		MHz	dBuV	dB	dBuV/m	dBuV/m	dB	Detector	cm	degree	Comment
1		614.0000	5.58	24.13	29.71	46.00	-16.29	peak	200	180	
2	*	903.3093	78.40	28.43	106.83	46.00	60.83	peak	200	200	
3		960.0000	7.23	28.71	35.94	46.00	-10.06	peak	100	230	

Mode:	LORA Transmitting	Channel:	902.3MHz
Polarity:	Vertical		

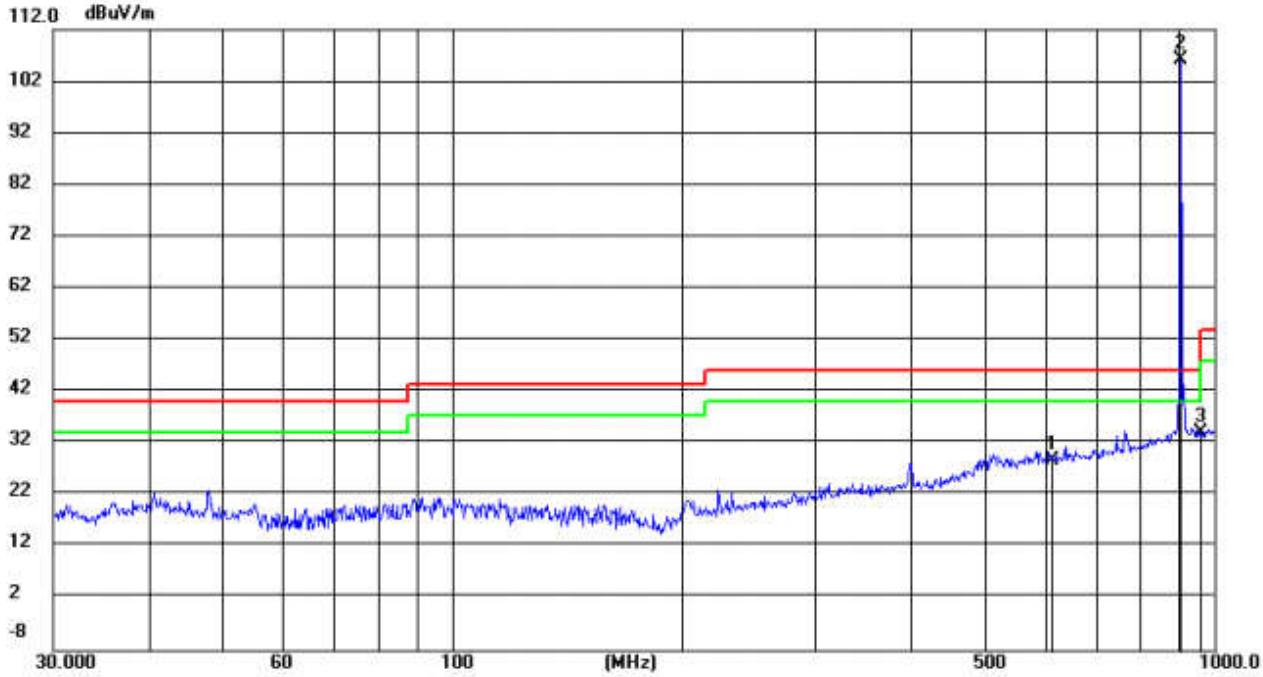

No.	Mk.	Freq.	Reading Level	Correct Factor	Measure-ment	Limit	Margin		Antenna Height	Table Degree	
		MHz	dBuV	dB	dBuV/m	dBuV/m	dB	Detector	cm	degree	Comment
1		614.0000	4.59	24.13	28.72	46.00	-17.28	peak	100	356	
2	*	903.3093	77.74	28.43	106.17	46.00	60.17	peak	200	280	
3		960.0000	5.58	28.71	34.29	46.00	-11.71	peak	100	160	

Mode:	LORA Transmitting	Channel:	914.9MHz
Polarity:	Horizontal		

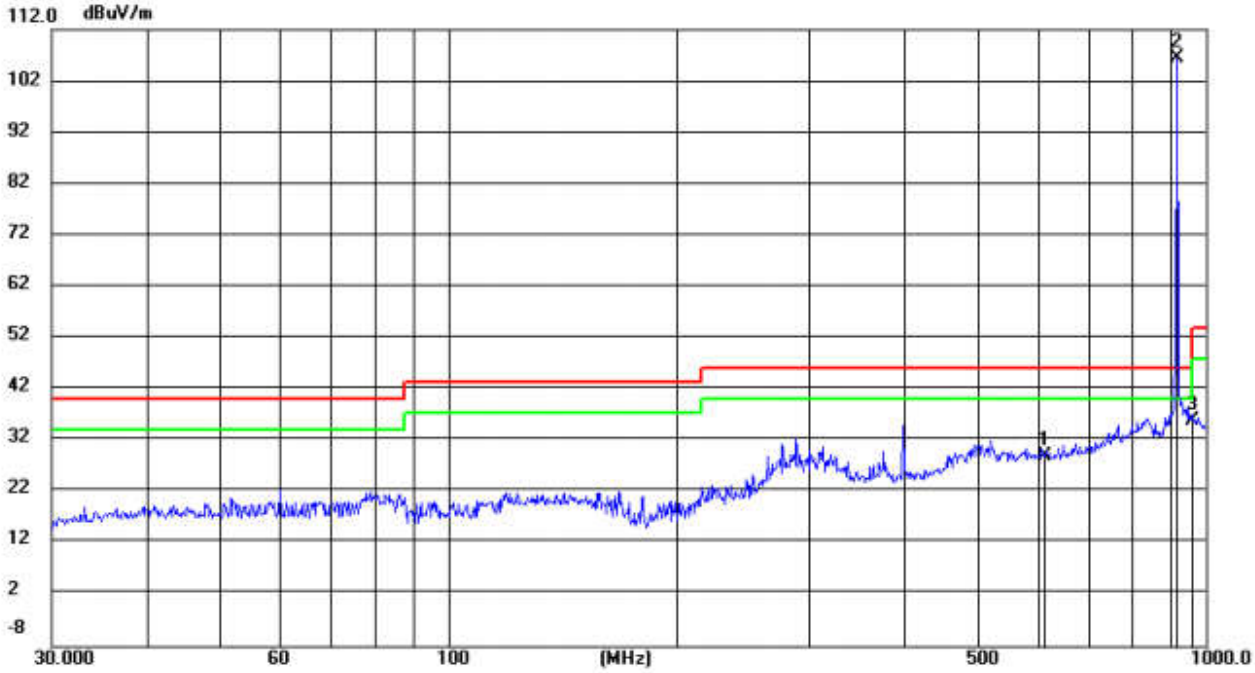

No.	Mk.	Freq.	Reading Level	Correct Factor	Measure-ment	Limit	Margin		Antenna Height	Table Degree	
		MHz	dBuV	dB	dBuV/m	dBuV/m	dB	Detector	cm	degree	Comment
1		614.0000	4.98	24.13	29.11	46.00	-16.89	peak	100	211	
2	*	916.0686	78.09	28.49	106.58	46.00	60.58	peak	100	231	
3		960.0000	7.33	28.71	36.04	46.00	-9.96	peak	100	301	

Mode:	LORA Transmitting	Channel:	914.9MHz
Polarity:	Vertical		

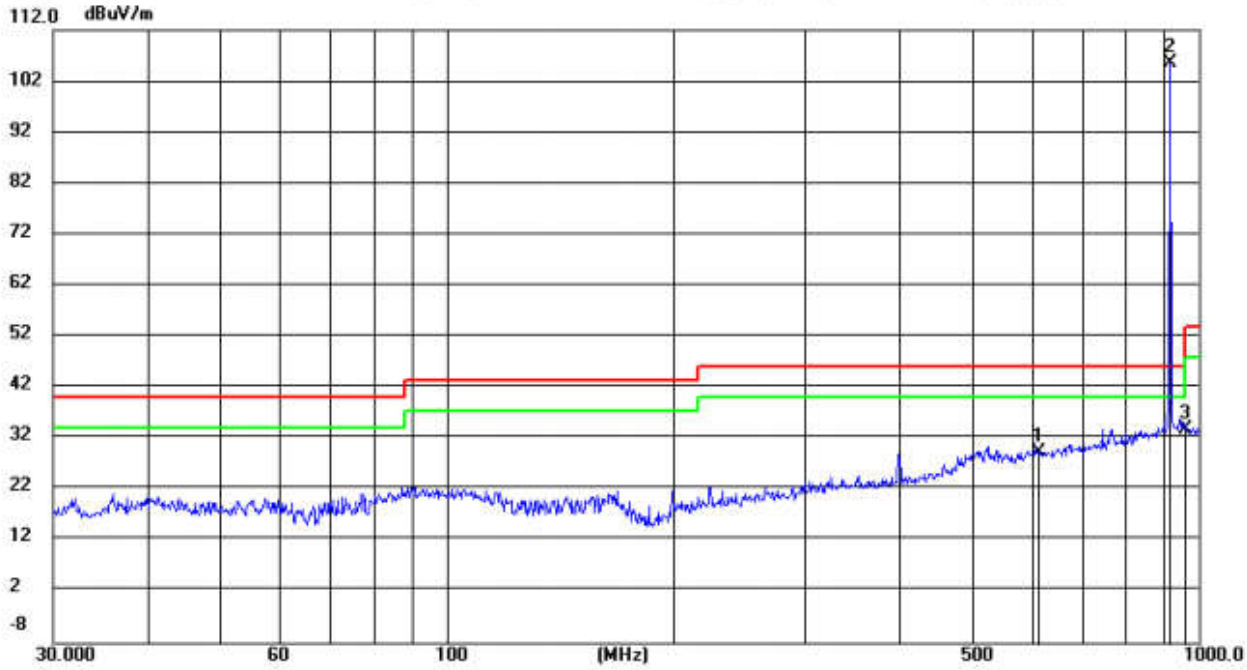

No.	Mk.	Freq.	Reading Level	Correct Factor	Measure-ment	Limit	Margin		Antenna Height	Table Degree	
		MHz	dBuV	dB	dBuV/m	dBuV/m	dB	Detector	cm	degree	Comment
1		614.0000	5.21	24.13	29.34	46.00	-16.66	peak	100	271	
2	*	916.0686	77.15	28.49	105.64	46.00	59.64	peak	100	69	
3		960.0000	5.08	28.71	33.79	46.00	-12.21	peak	100	241	

Note:
The field strength is calculated by adding the Antenna Factor, Cable Factor & Preamplifier. The basic equation with a sample calculation is as follows:
Final Test Level =Receiver Reading - Correct Factor
Correct Factor = Preamplifier Factor– Antenna Factor–Cable Factor

6 Appendix A

Refer to Appendix: LORA FHSS of EED32O81002003

7 PHOTOGRAPHS OF TEST SETUP

Test model No.: S2101

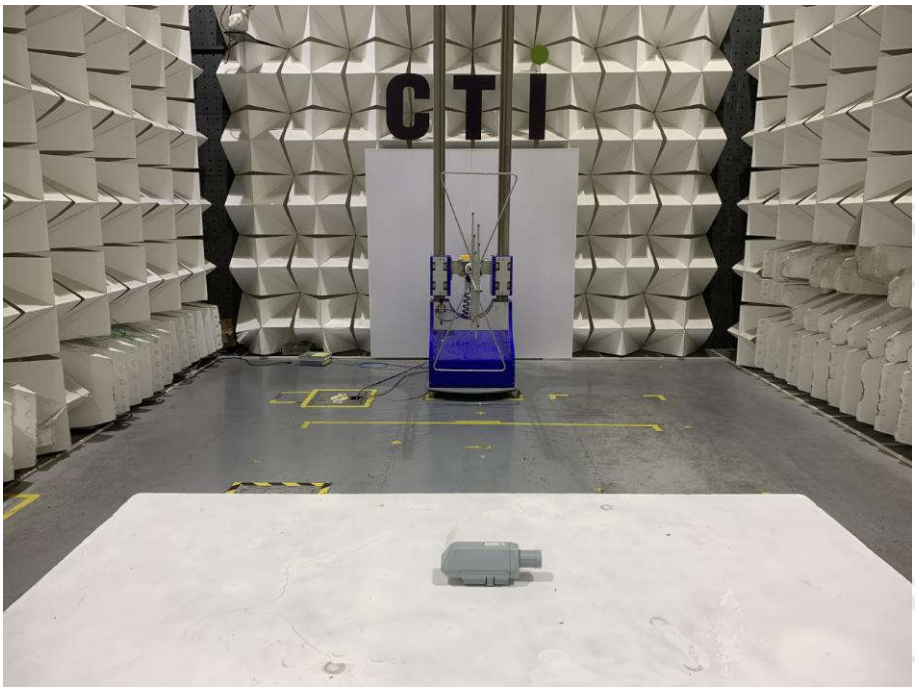

Radiated spurious emission Test Setup-1(Below 1GHz)

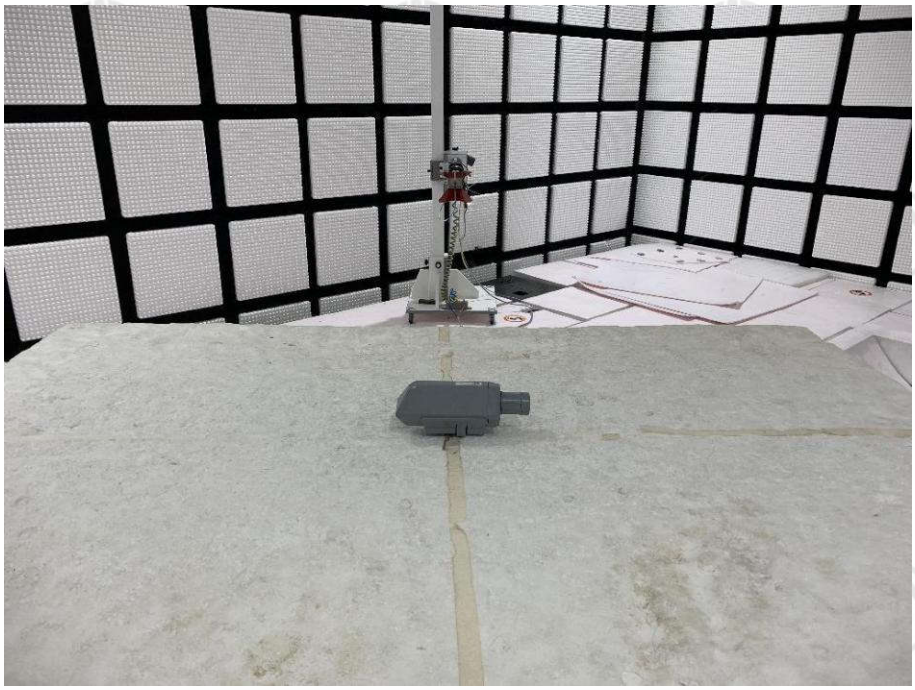

Radiated spurious emission Test Setup-2(Above 1GHz)

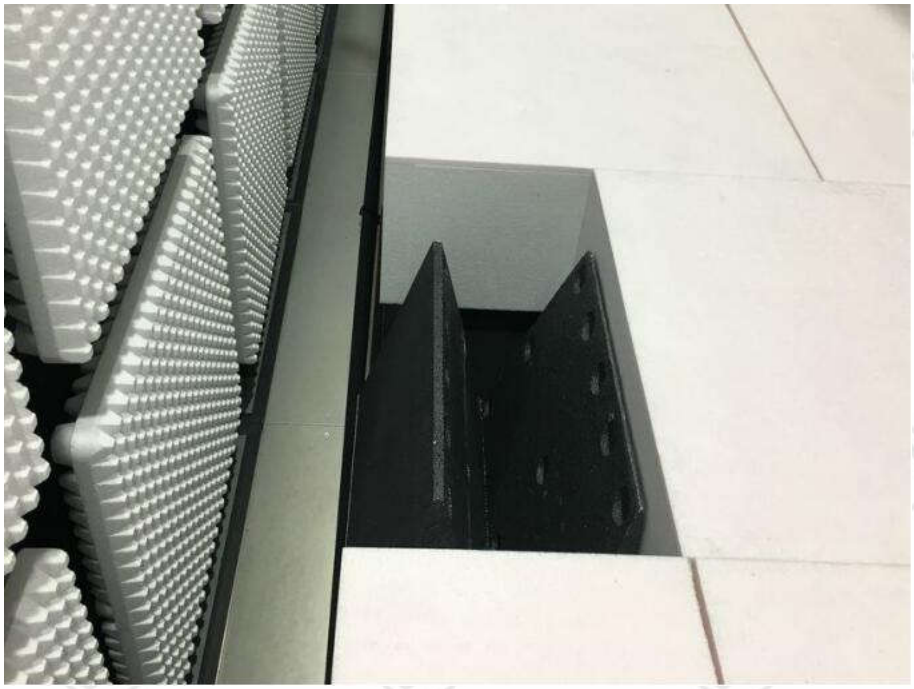

Radiated spurious emission Test Setup-3(Above 1GHz)
There are absorbing materials under the ground.

8 PHOTOGRAPHS OF EUT Constructional Details

Refer to Report No.EED32O81002001 for EUT external and internal photos.

The test report is effective only with both signature and specialized stamp, The result(s) shown in this report refer only to the sample(s) tested. Without written approval of CTI, this report can't be reproduced except in full.

*** End of Report ***