WMBT01 Datasheet

June 5, 2021

V1.1

Version History

Revision	Amendment	Date	Author
1.0	Initial version	2021-03-18	Baoqiang Huang
1.1	Update module block diagram size	2021-06-05	Baoqiang Huang

Contents

1. Module Block Diagram..... 6
1.1. Interface Description..... 6
2. Module Performance..... 7
3. PIN Definition..... 8
3.1. PIN Descriptions..... 9
3.2. PIN assignment..... 10
4. Electrical Characteristic..... 11
4.1. Recommended Operating Conditions..... 11
4.2. Digital IO DC Characteristics..... 11
4.3. RF Characteristics..... 12
4.4. Power Consumption..... 12
5. Timing Diagram..... 12
5.1. RESET Timing Diagram..... 12
6. Package..... 13
7. Recommended PCB Package Size..... 14
8. PCB Design Notes..... 14
8.1. Schematic Design Notes..... 14
8.2. PCB Layout Design Notes..... 15
8.3. MODULE PLACEMENT EXAMPLES..... 16
9. Package Information..... 17
9.1. Net Weight..... 17
9.2. Package..... 17
9.3. Storage Conditions..... 18
Appendix..... 19

Descriptions

WMBT01 (-s,-sc) is Bluetooth 5.2 BR/EDR BLE Dual Mode SOC module. A highly integrated SOC for Bluetooth data stream process, WMBT01 (-s,-sc) integrates a low power MCU, RF transceiver, Baseband, Modem, USB Device, SARADC and up to 16 GPIOs in the module. WMBT01 (-s,-sc) offers low cost, low power consumption, flexible and more powerful Bluetooth application.
WMBT01 (-s,-sc) operates with a widely power supply range from 1.9V to 3.6V and has very low power consumption in both TX and RX modes, enabling long lifetimes in battery-operated systems while maintaining excellent RF performance. The device can enter an ultra-low power sleep mode in BT sniff mode and BLE connection interval.

Module Specifications

Stack Features

- Support Bluetooth v5.2 specification compliant
- Compatible with V2.1 + EDR
- Support the Bluetooth smart firmware includes Security Manager(SM), Attribute Protocol(ATT), the Generic Attribute Profile(GATT) and Generic Access Profile(GAP)
- High speed UART or USB port for BT HCI and AT commands
- Support up to 7 ACLs and 1 SCO/eSCO link for BR/EDR.
- Support up to 4 BLE links(Up to 3 links in slave mode)

Hardware Features

- 32-bit RISC processor up to 96MHz with on-chip ROM(384Kbytes) and RAM(96Kbytes)
- Operating temperature：-40 to +85 ℃
- 1.9V to 3.6V power supply
- 512Kbytes build in flash
- Power modes included shutdown/deep sleep/light sleep/active
- Wake up by UART/GPIO(light sleep), and RTC(deep sleep)
- High speed UART port for BT HCI and Data interface, up to 4Mbps
- Single pin RF connection (50 ohm impedance in TX and Rx modes)
- High performance on-chip RF transceiver with integrated balun
- Integrated Power amplifier with maximum +6dbm transmit power output, support Bluetooth class 1 application without external PA
- -94dbm receive sensitivity for LE(1Mbps) mode and92dbm for BR/EDR mode
- Up to +6dBm RF transmit power
- GFSK/π/4-DQPSK/8DPSK modulator
- GFSK/π/4-DQPSK/8DPSK demodulator
- RF/Analog Control (AGC,PA, Ramp up/down timer, Low power)
- Embedded high speed and low power CPU with on-chip ROM(384Kbytes) and RAM(96Kbytes)
- Embedded 4 channel 11bit 1Mbps SARADC for peripheral controls
- Built-in PLL, support system run up to 96MHz, and built-in crystal oscillator 24MHz
- Embedded PMU for efficient power management
- 2x I2C master/slave, support standard and fast mode

- 4 sets PWM interface
- 4-wire SPI(master and slave) interface, up to 12MHz
- 8x channels DMA for peripheral interface (UART,USB,I2C,SPI)
- WDT/RTC/8x Timers
- 2x UARTs (uart0 has CTS/RTS)
- Various (total 16) GPIOs for various purposes
- Embedded SPI flash support XIP mode, Facilitate customer application development
- Support firmware upgrade over UART/USB or Air(OTA)

Applications

- Printer
- Bluetooth HID
- Free drive dongle
- TV remote controller
- Toys
- Data communication application

1. Module Block Diagram

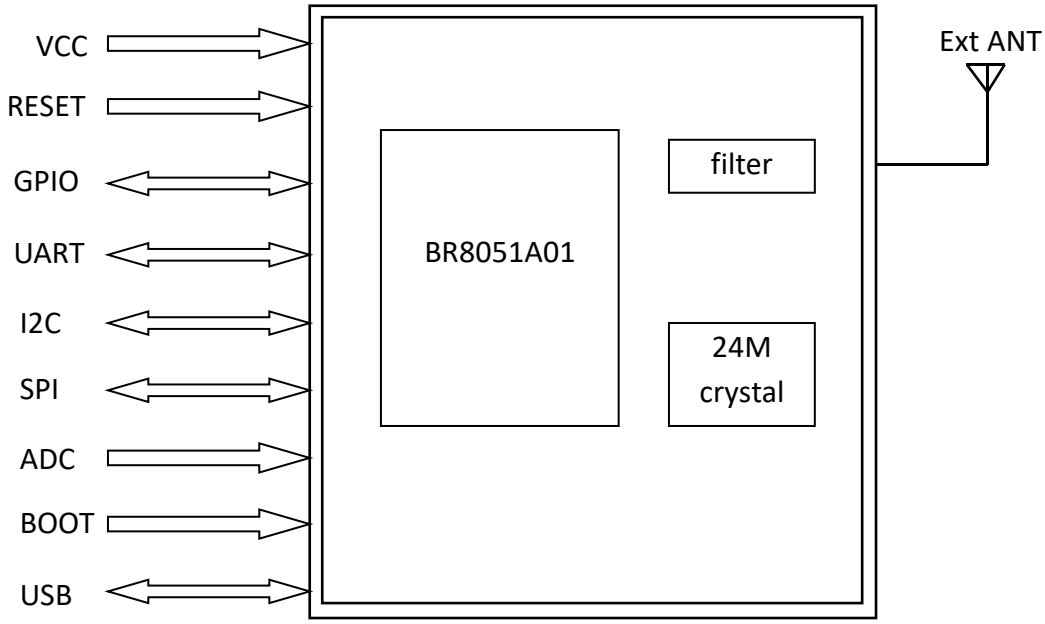

Figure1 WMBT01-s, WMBT01-sc Module Block Diagram

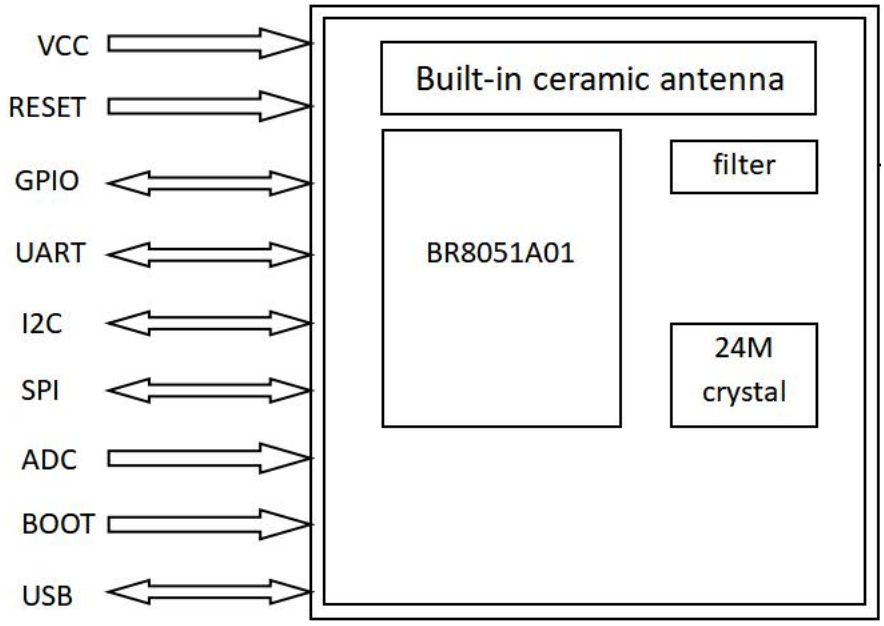

Figure2 WMBT01 Module Block Diagram

1.1. Interface Description

VCC

Standard 1.9 to 3.6V power supply power ripple≤50mV, 3.3V recommended.

RESET

Support hardware reset.

BOOT

Pull down when firmware upgrade, pull up or NC when normal working.

UART

The module's UART is a standard four lines interface (RX/TX/RTS/CTS). Its baud rate can be selected via UART AT command.

Support hardware flow control.

Support speed of up to 4Mbit/s.

Uart0 can be served by the DMA controller.

I2C

I2C interface supports standard mode (100kbit/s) and fast mode (400kbit/s). The I2C work as either master or slave mode.

GPIO

Floating level on input signals will cause unstable device operation and abnormal current consumption. Pull-up or Pull-down resistors should be used appropriately for input or bidirectional pins.

USB

Support USB 2.0 full speed mode.

2. Module Performance

Table 1 Module Performance

Module P/N	WMBT01 (-s,-sc)
Bluetooth Specification	Dual-module, Bluetooth V2.1+EDR and V5.2
Bluetooth Class Type	Class 2
Distance	50m (open area)
Antenna	WMBT01:internal WMBT01-s(c): external
Transmit Power	6dBm
Receive Sensitivity	-94dbm receive sensitivity for LE(1Mbps) mode -92dbm for BR/EDR mode
Modulation	GFSK,π/4-DQPSK,8-DPSK
Hardware Interfaces	RESET,GPIO,UART, I2C,SPI,BOOT,ADC,USB

Working voltage	1.9V~3.6V
Working power consumption	7mA
Idle power consumption	2mA
Deep sleep power consumption	-
Operating temperature	-40 to +85℃
Storage temperature	-55 to +125℃
shield	WMBT01-s: No WMBT01(-sc): Yes
Size	15mm*12mm*1.8mm(tolerance ±0.2mm No shield) 15mm*12mm*2.4mm(tolerance ±0.2mm With shield)

3. PIN Definition

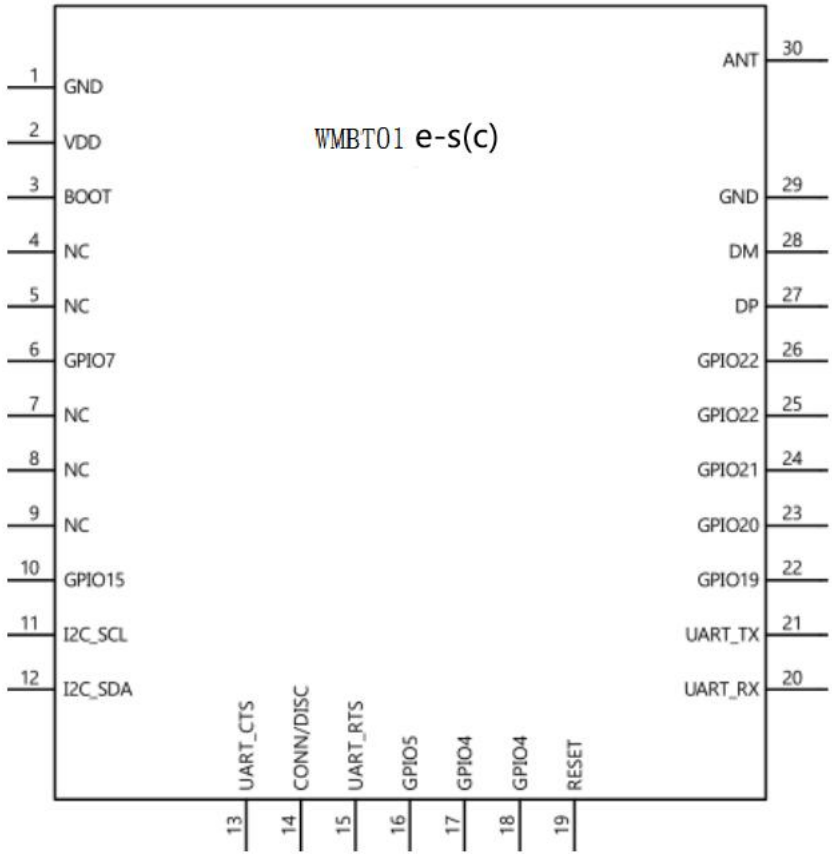

Figure 3 WMBT01-s, WMBT01-sc Module PIN Definition

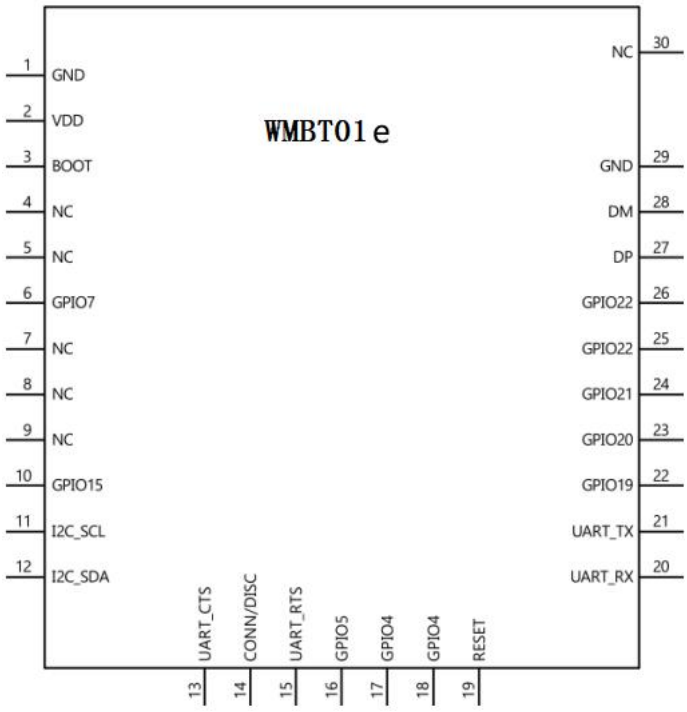

Figure 4 WMBT01 Module PIN Definition

3.1. PIN Descriptions

Table 2 PIN Descriptions

PIN	PIN description	Function
1	GND	Power ground.
2	VDD	1.9V to 3.6V power supply, 3.3V recommended. Need external 10uF and 0.1uF capacitor connected to this pin.
3	BOOT	Pull down when firmware upgrade, pull up or NC when normal working.
4	NC	No Connect
5	NC	No Connect
6	GPIO7	Configurable GPIO, NC if not used.
7	NC	No Connect
8	NC	No Connect
9	NC	No Connect.
10	GPIO15	Configurable GPIO, NC if not used.
11	I2C_SCL	I2C Clock GPIO17 NC if not used.
12	I2C_SDA	I2C DATA GPIO18 NC if not used.

13	UART_CTS	UART flow control, input, Clear To Send, Pull up prohibited sending data, pull down to send. Pull down if not used. GPIO3
14	CONN/DISC	Configurable GPIO, Default DICS PIN Pull up into working mode. Pull down more than 100mS to disconnect the Bluetooth connection. NC if not used. GPIO16
15	UART_RTS	UART flow control, output, Request To Send. When the Bluetooth serial port buffer is full, this pin will be pulled up, notify the master computer to stop serial port sending; When the buffer is sufficient, this pin will be pulled down and allow the master computer to continue to send data through the serial port. NC if not used. GPIO2
16	GPIO5	Configurable GPIO, Default conn_status PIN Bluetooth Connected is high, unconnected is low. NC if not used.
17/18	GPIO4	Configurable GPIO, NC if not used.
19	RESET	Hardware reset NC if not used; pull down time> 50ms if used.
20	UART_RX	UART0 data receive GPIO1
21	UART_TX	UART0 data send GPIO0
22	GPIO19	Configurable GPIO, NC if not used.
23	GPIO20	Configurable GPIO, NC if not used.
24	GPIO21	Configurable GPIO, NC if not used.
25/26	GPIO22	Configurable GPIO, NC if not used.
27	DP	USB DP, NC if not used.
28	DM	USB DM, NC if not used.
29	GND	Ground
30	WMBT01-s(c):ANT	WMBT01-s, WMBT01-sc:External antenna
	WMBT01:NC	WMBT01:Built-in ceramic antenna

3.2. PIN assignment

Table 3 PIN assignment

PIN name	Function0 mode	Function1 mode	Function2 mode	Function3 mode

UART_TX	UART0_TX	GPIO0	TX_EN	UART0_TX(output)
UART_RX	UART0_RX	GPIO1	RX_EN	UART0_RX (input)
UART_RTS	UART0_RTS	GPIO2	PWM1	N/A
UART_CTS	UART0_CTS	GPIO3	PWM2	N/A
BOOT	BOOT Mode	N/A	N/A	N/A
GPIO7	GPIO7	CLK_EXT_32K_IN(ext clock source)	PWM1	N/A
GPIO4	SWD_CLK	GPIO4	PWM3	I2C_SCLK
GPIO5	SWD_DIO	GPIO5	PWM4	I2C_SDA
GPIO15	GPIO15	UART1_TX	SPIM_CLK	SPIS_CLK
CONN/DISC	GPIO16	UART1_RX	SPIM_CSN	SPIS_CSN
I2C_SCL	GPIO17	I2C_SCLK	SPIM_MISO	SPIS_MISO
I2C_SDA	GPIO18	I2C_SDA	SPIM_MOSI	SPIS_MOSI
GPIO19	GPIO19	(BB)PCM_CLK	I2S_CLK	UART1_TX
GPIO20	GPIO20	(BB)PCM_SYNC	I2S_FS	UART1_RX
GPIO21	GPIO21	(BB)PCM_IN	I2S_IN	TX_EN
GPIO22	GPIO22	(BB)PCM_OUT	I2S_OUT	RX_EN

Note: need to customize the program to modify the pin assignment

4. Electrical Characteristic

4.1. Recommended Operating Conditions

Table 4 Recommended Operating Conditions

Rating	Min	Typical	Max	Unit
Storage temp.	-55	-	125	℃
Operating temp.	-40	-	85	℃
VDD power supply	1.9	3.3	3.6	V

4.2. Digital IO DC Characteristics

Table 5 Digital IO DC Characteristics (VDD=3.3V)

Symbol	Parameter	Min	Typical	Max	Unit
VIL	Low-level input voltage	-	0	0.9	V
VIH	High-level input voltage	2.0	3.3	-	V
VOL	Low-level output voltage	0	-	0.33	V
VOH	High-level output voltage	2.97	-	3.3	V
IOL	Low-level output current	-	8	-	mA
IOH	High-level output current	-	8	-	mA
Rpull	internal Pull up resistance	30K	50K	70K	Ω

4.3. RF Characteristics

Table 6 RF Characteristics

Parameter	Conditions	Min	Typical	Max	Unit
Frequency Range	-	2400	-	2484	MHZ
RX Sensitivity@1Mbps BLE	PER=30.8%	-70	-94	-	dBm
RX Sensitivity@1Mbps BT	BER=0.1%	-70	-91.5	-	dBm
RX Sensitivity@ EDR 2Mbps	BER=0.01%	-70	-92	-	dBm
RX Sensitivity@ EDR 3Mbps	BER=0.01%	-70	-85	-	dBm
Transmit Output Power	BR(GFSK)	-30	-	6	dBm
	EDR2(π/4-DQPSK)	-30	-	2	dBm
	EDR3(8-DPSK)	-30	-	2	dBm
	BLE	-30	0	6	dBm

4.4. Power Consumption

Table 7 Power Consumption(3.3V, 25℃, 6dB TX)

Operation Mode	Min	Typical	Max	Unit
Deep sleep	-	10	-	uA
sleep	-	400	-	uA
idle	-	5.5	-	mA
TX	-	21	-	mA
RX	-	16	-	mA

5. Timing Diagram

5.1. RESET Timing Diagram

Module reset timing diagram is shown in Figure3 below. Trst>50ms.

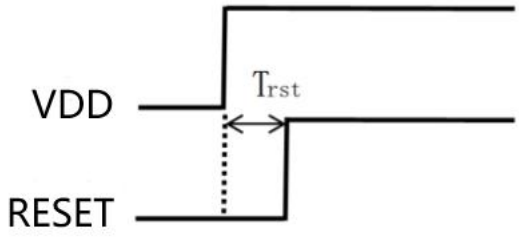

Figure 5 Reset Timing Diagram

6. Package

Table 8 Package dimensions (top view)

Module	PCB Package	Mechanical Size	Process Type	Remark
WMBT01 WMBT01-s WMBT01-sc	Stamp holes	WMBT01 , WMBT01-sc: Size:15mm(L)x12mm(W)x2.4mm(H) (±0.2mm) With shield	SMD	-
		WMBT01-s : Size:15mm(L)x12mm(W)x1.8mm(H) (±0.2mm) NO shield		

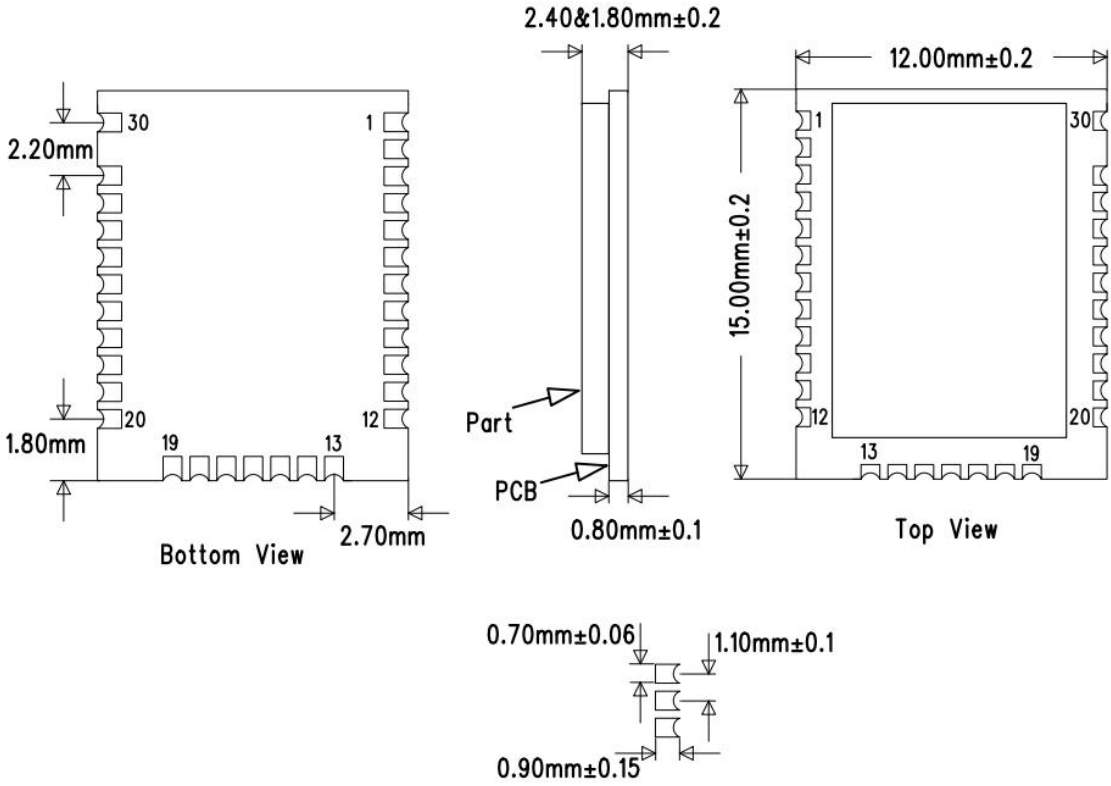

Figure 6 WMBT01 (-s,-sc) Size Information

7. Recommended PCB Package Size

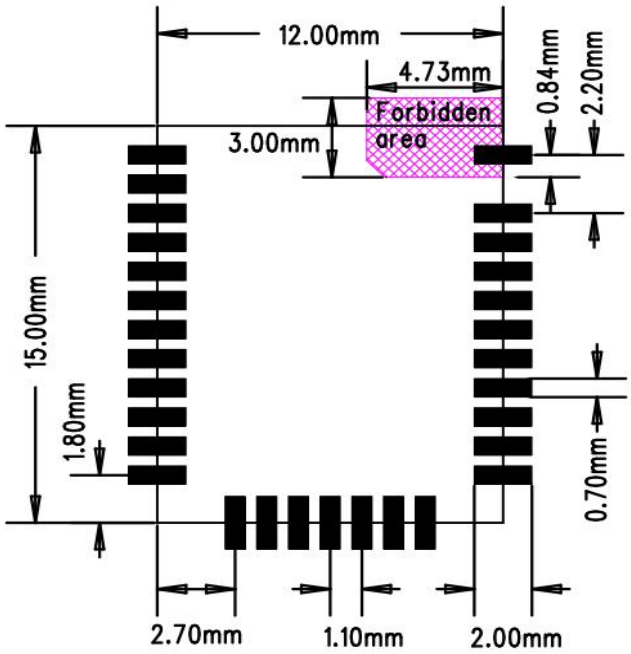

Figure 7 PCB Package Size

8. PCB Design Notes

8.1. Schematic Design Notes

Core components placement requirements: Bluetooth power decoupling capacitor should be placed close to the module, and the trace width should be over 20mil.

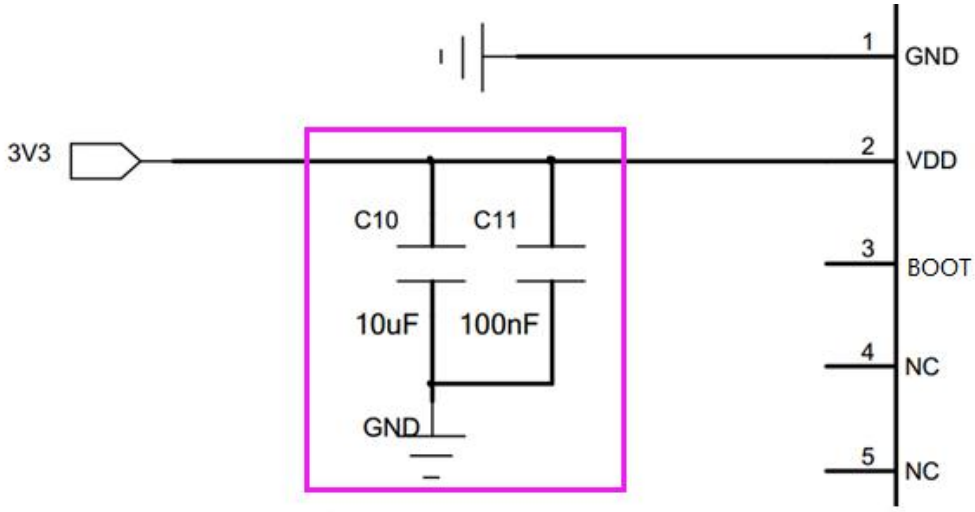

Figure 8 Bluetooth Power

8.2. PCB Layout Design Notes

- The module should be placed as much as close to PCB's edge. The module internal antenna should be close to PCB's edge as much as possible. The module antenna area's all layers are copper prohibited.
- No power supply or other wiring should pass through antenna bottom.
- The antenna should be placed far away from interference (such as crystal) as much as possible.

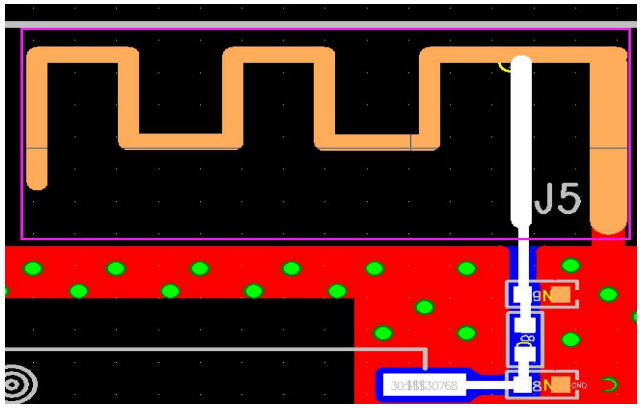

Figure 9 External RF Antenna Layout

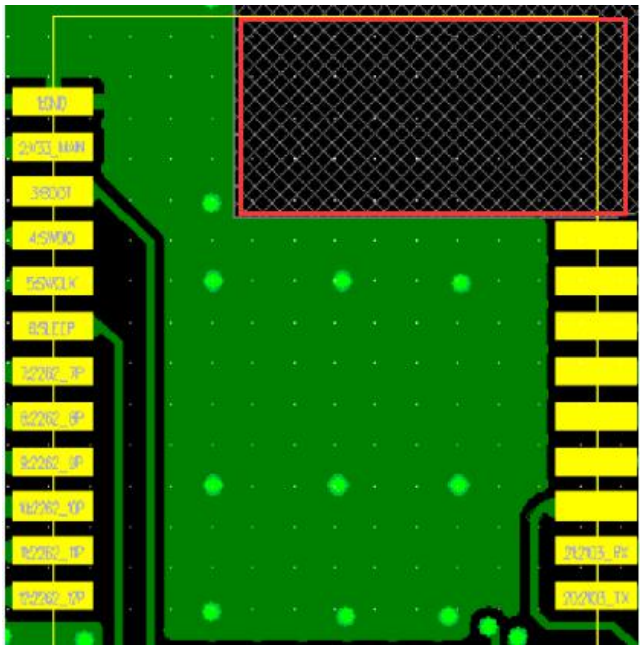

Figure 10 Internal RF Antenna Layout

8.3. MODULE PLACEMENT EXAMPLES

For a Bluetooth wireless product, the antenna placement affects the performance of the whole system. The antenna requires free space to radiate the RF signal and it cannot be surrounded by the ground plane.

Seeed recommends that the areas underneath the antenna on the host PCB should not contain copper on top, inner, or bottom layer.

The ground plane can be extended beyond the minimum recommended as required for the main PCB EMC noise reduction. For the best range performance, keep all external metal away from the ceramic chip antenna that is minimum 15 mm away.

Figure 11 illustrates an example of good and poor antenna placement on a host PCB with ground plane.

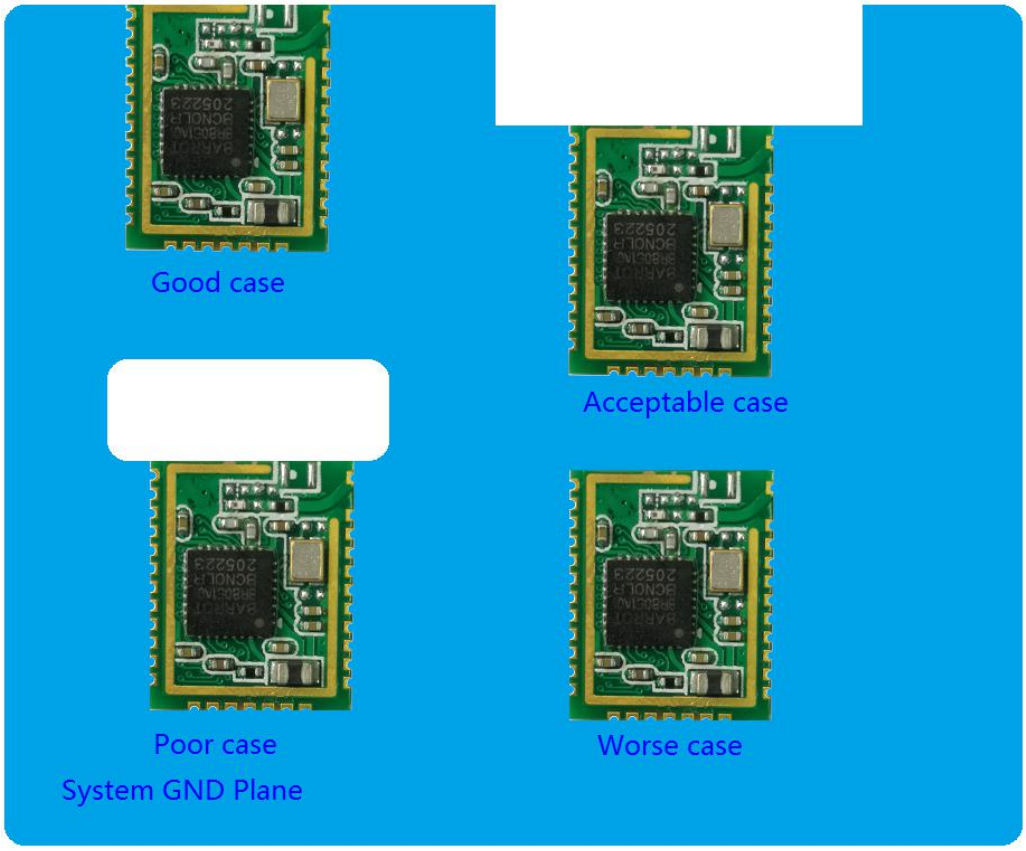

Figure 11 module placement

9. Package Information

9.1. Net Weight

Module net weight: WMBT01-s: 0.46g±0.02g；
WMBT01 (-sc) 0.76g±0.02g.

9.2. Package

Reel package：1500pcs/reel
Tape package：100pcs/tape
When less than 1 tape and less than 50% MOQ, Default tray shipment.
When less than 1 tape and more than 50% MOQ, you can choose tape and reel packaging for shipment according to customer needs

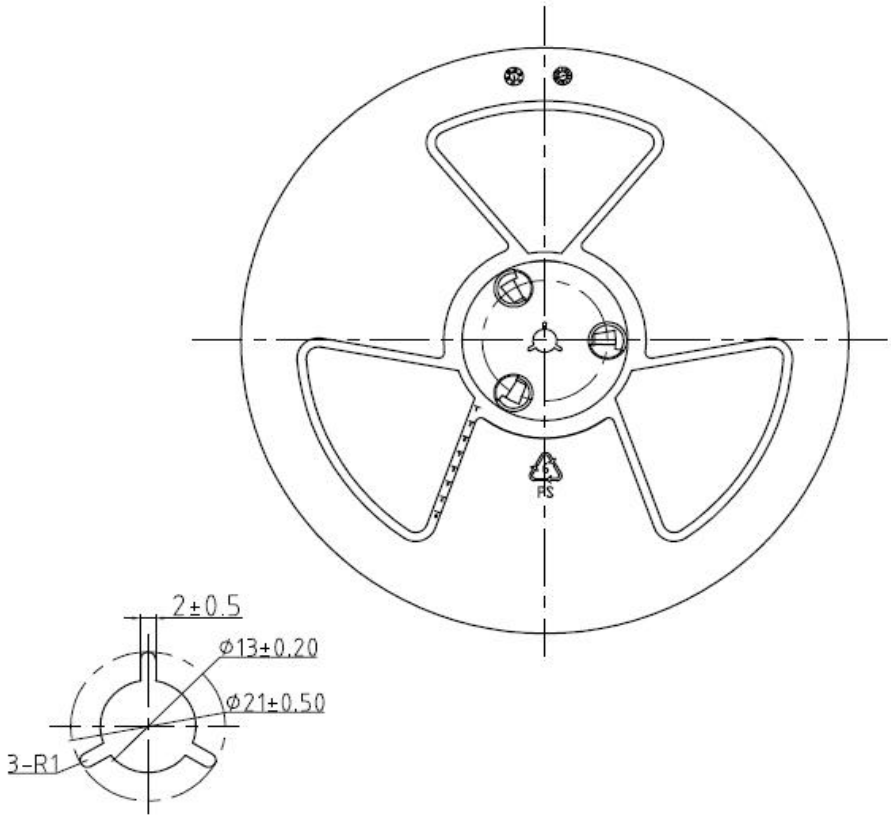

MATERIAL ; PS COLOR :BLUE

Width	12mm	16mm	24mm	32mm	44mm	56mm	72mm	88mm
W1	13.5	17.5	25.5	33.5	45.5	57.5	74.0	90
W2	17.5	21.5	29.5	37.5	49.5	61.5	78.0	94

Figure 12 Reels

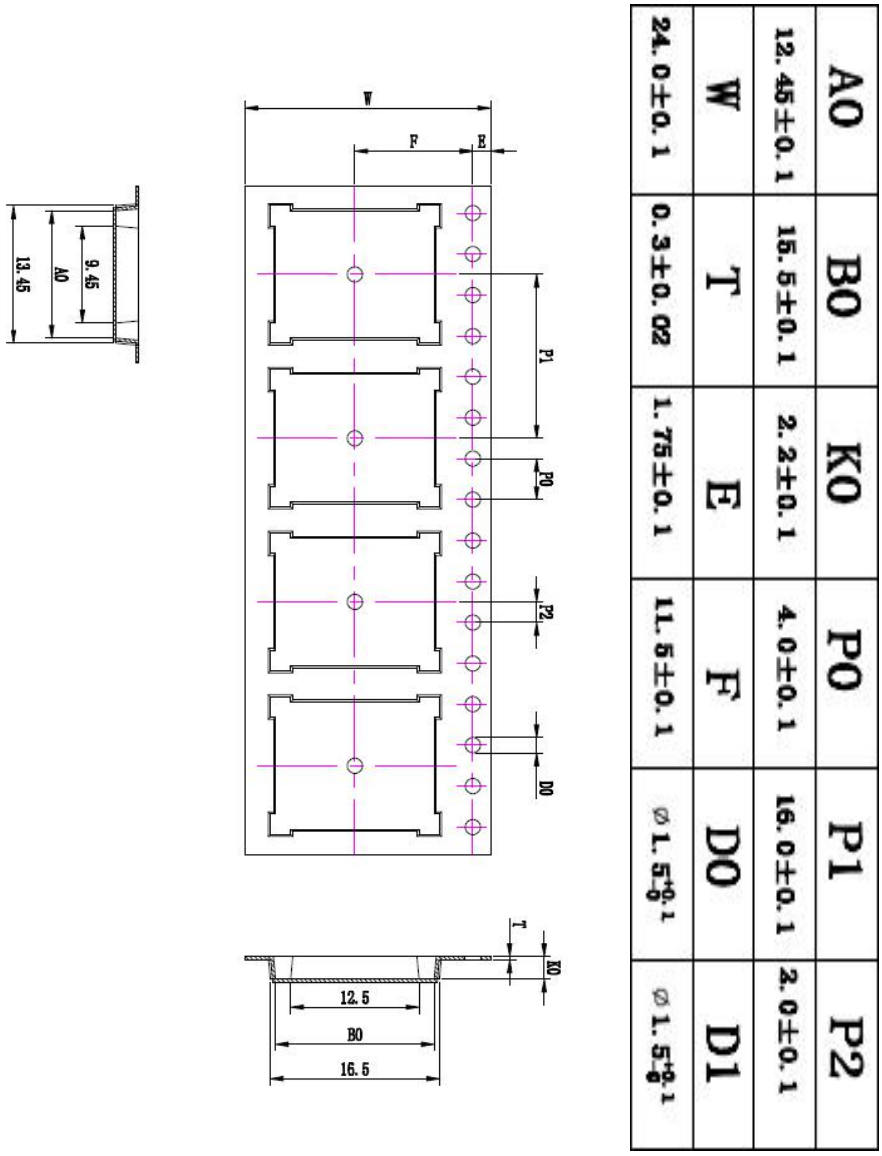

Figure 13 Taping

9.3. Storage Conditions

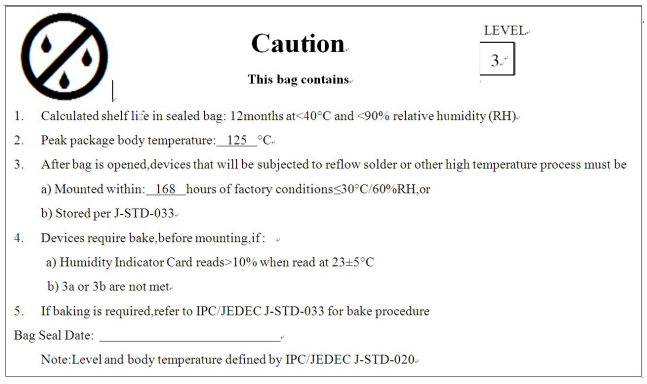

Caution

LEVEL 3

This bag contains

1. Calculated shelf life in sealed bag: 12months at<40°C and <90% relative humidity (RH)
2. Peak package body temperature: 125 °C
3. After bag is opened,devices that will be subjected to reflow solder or other high temperature process must be
   a) Mounted within: 168 hours of factory conditions≤30°C/60%RH,or
   b) Stored per J-STD-033
4. Devices require bake,before mounting,if:
   a) Humidity Indicator Card reads>10% when read at 23±5°C
   b) 3a or 3b are not met
5. If baking is required,refer to IPC/JEDEC J-STD-033 for bake procedure

Bag Seal Date: _____

Note:Level and body temperature defined by IPC/JEDEC J-STD-020

Figure 14 Storage Conditions

Appendix

1. Storage Requirements

1.1 Temperature: 22~28℃;

1.2 Humidity: <70 %(RH);

Vacuum packed and sealed in good condition to ensure 12 months of welding.

2. Humidity Sensitive Characteristic

2.1 MSL: 3 level

2.2 Once opened, SMT within 168 hours in the condition of temperature: 22~28°C and humidity<60 %(RH). Once production line stops, modules should either be stored in the drying box or be vacuum packed. If it fails to meet above storage conditions, *Bluetooth* modules need drying. Drying parameters refer to Table 2-1.

2.3 Handling, storage, and processing should follow IPC/JEDECJ-STD-033

Table 2-1: Mounted or un-mounted SMD package drying reference condition

(User drying: Shop life starts after drying, Time=0)

Drying under 125°C		Drying under 90°C，≤5%RH		Drying under 40°C，≤5%RH	
Over floor life >72 hours	Over floor life≤72 hours	Over floor life >72 hours	Over floor life≤72 hours	Over floor life >72 hours	Over floor life≤72 hours
9 hours	7 hours	33 hours	23 hours	13 days	9 days

3. PCB Design Instruction

3.1 PCB Pad Surface Treatment

ENIG (Chemistry Ni/Au) OSP are recommended for PCB surface treatment. ENIG (Chemistry Ni/Au) is preferred.

3.2 PCB Pad Design

3.2.1 In order to ensure high production efficiency and high reliability of solder joints, PCB pad design refers to recommended PCB pad size in the corresponding product specification.

3.2.2 Even only part of PINs are used, it is recommended to do full pad design, symmetric pad design, or asymmetric pad design (refer to Figure 3-1). During reflow, if the pad paste melts, the module is vulnerable to non-balanced force pull. It may lead to PIN short circuit if the module deflects under the action of torque.

Figure 3-1: Asymmetric Pad Design

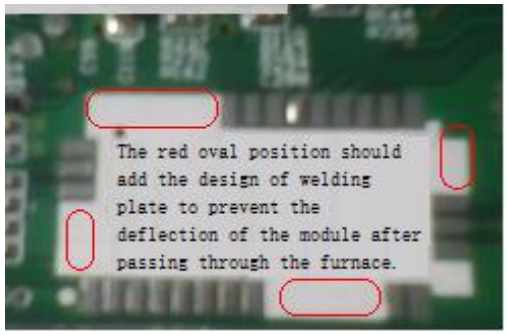

3.3.3 Layout Requirements

a. For PCB double sided layout, it is recommended to process on 2nd side.

b. The layout of other elements should be avoided on the outermost end 1mm area of module pad. In order to increase repair space, other elements layouts should be as far away from the module as possible. The minimum distance between the module pad and PCB board edge is 1.5mm.

3.3.4 Compatible Design Considerations

To prevent any hidden risks, module placement area (See the red rectangle in Figure 3-2 below) shouldn't include any pad design which intends to be compatible with other elements.

Figure 3-2: Module Placement Area Example

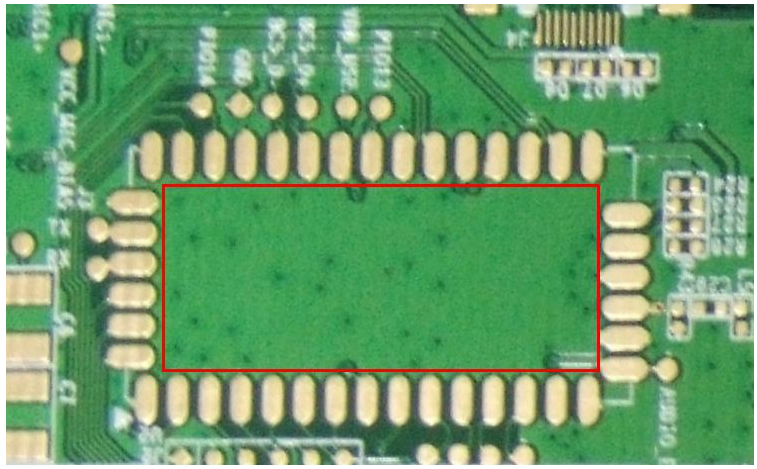

4. SMT Notes

4.1 All *Bluetooth* modules of our company are lead free. It is suggested to use lead free process technique when SMT processing to prevent the reduction of the reliability of module welding technique which may be caused by the usage of lead production process technique.

Note: the lead BGA solder ball has low melting point (183°C), the lead-free BGA solder ball has high melting point (217°C -221°C).When the temperature rises to 183°C, the solder paste is melting; When the temperature rises to 220°C, lead free BGA solder ball starts to melt, and it is in the state of coexistence of solid and liquid. If lead technology is used and the furnace starts cooling, the original welding surface structure of BGA elements is damaged, and a new alloyed layer of the welding surface cannot be formed. This may lead to lead free BGA solder joint failure during reflow, which results in pseudo solder joints and other reliability issues in further.

4.2 SMT stencil Design

Ladder stencil is recommended. Stencil opening design requirements are as follows:

4.2.1 The PIN area of the module is recommended to be thickened. For modules with different PCB thickness, the thickened solder paste is shown in the following table. The thickening position should be kept at least 1mm apart from other parts.

Number	Module PCB thickness	Thickness of the steel mesh	Note
1	0.8mm	0.15mm ladder	If there is a precise IC pad around the module, it is not recommended to exceed 0.15mm step thickness. The amount of solder paste can be increased by using the square of the epitaxial steel mesh
2	1.0mm	0.18mm ladder	
3	1.2mm	0.25mm ladder	
4	1.6mm	0.30mm ladder	

4.2.2 Opening width: 55%-65% of PCB PIN foot pad Pitch (centre-to-centre spacing)

(Since the actual width of the motherboard pad is not ensured, the opening width is determined by pitch).

4.2.3 Opening length: based on PCB PIN foot, cutting 0.1-0.2mm towards inside, and extending 0.5-0.8mm towards outside. Outer extension pads maintain at least 0.25mm safety spacing with other elements. Cutting module pad opening if not enough space is left. Opening should be round corners.

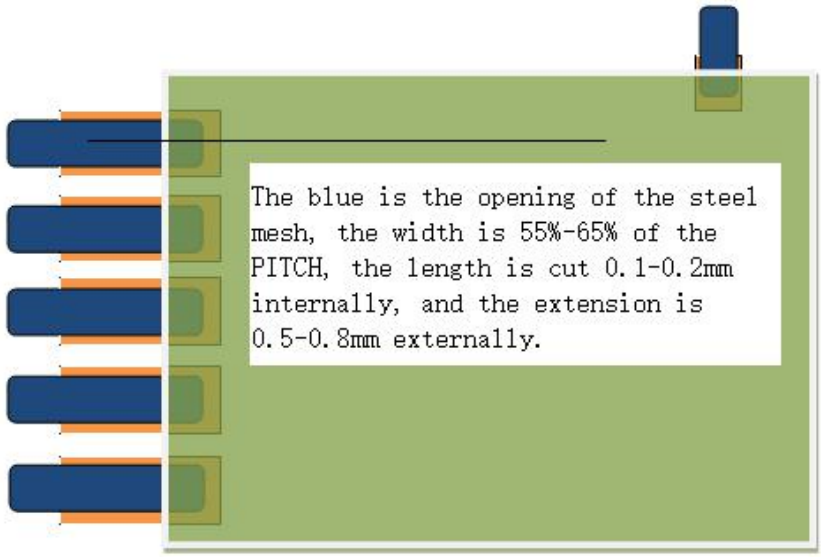

4.3 Reflow Profile

4.3.1When making the furnace temperature curve, it should add temperature measuring circuit under *Bluetooth* module's BGA to measure its real time temperature.

Recommended temperature parameters：

Increasing slope (°C /SEC): 1~2

Descending slope (°C /SEC): -4~-1

Reflow time(S): 40~70

Peak temperatures (°C): 240-248

The actual furnace temperature curve for *Bluetooth* modules production:

Setpoints (摄氏)								
温区	1	2	3	4	5	6	7	8
上温区	130	150	175	175	180	215	260	250
下温区	130	150	175	175	180	215	260	250
Conveyor Speed (公分/分):	70.00							

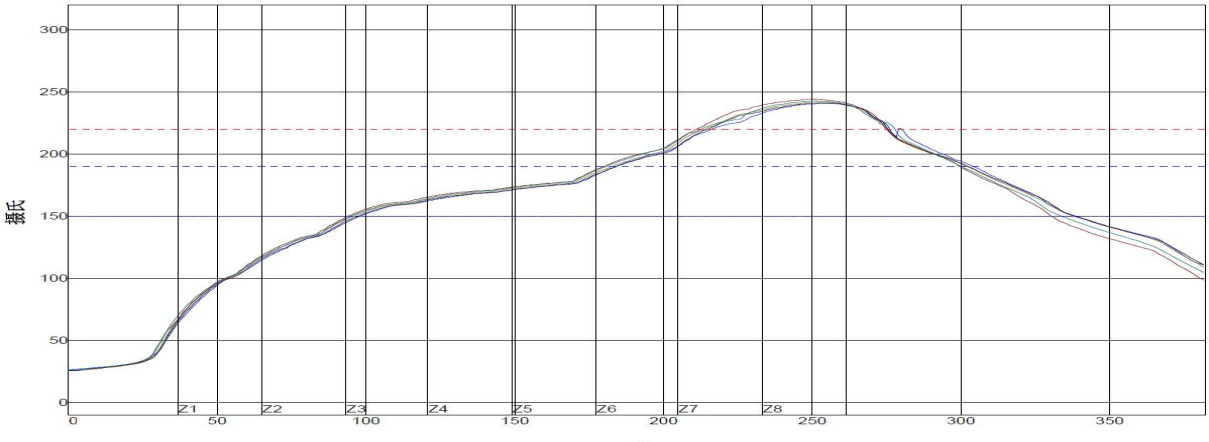

PWI= 76%	最高下降斜率		恒温时间150至190C		回流时间 /220C		最高温度		斜率1 (25-150C)	
	-1.45	70%	85.99	7%	60.86	-28%	240.94	-76%	2.13	13%
	-1.64	57%	86.78	12%	61.12	-26%	241.73	-57%	2.24	24%
	-1.61	59%	86.85	12%	60.20	-32%	241.12	-72%	2.21	21%
	-1.65	56%	86.01	7%	63.72	-9%	244.20	5%	2.24	24%
	-1.52	65%	85.95	6%	65.13	1%	242.71	-32%	2.20	20%
温差	0.20		0.90		4.93		3.26		0.11	

制程界限:

锡膏: FLC MODE(ROHS)

统计数名称	最低界限	最高界限	单位
斜率1 (目标=2.0)			
介于 25.0 和 150.0	1	3	度/秒
(计算斜率的时间距离= 35 秒)			
最高温度下降斜率	-4	-1	度/秒
(计算斜率的时间距离= 20 秒)			
恒温时间150-190摄氏度	70	100	秒
回流以上时间 - 220摄氏度	50	80	秒
最高温度	240	248	度 摄氏

4.4 Reflow Soldering

4.4.1 When PCBA which is mounted with *Bluetooth* module and it enters reflow, please strictly ensure PCBA boards to pass through furnace via track path. Passing through furnace via the net cover of reflow oven is prohibited.

Since *Bluetooth* contains BGA elements, the net cover vibration may lead to high rates of BGA solder welding defects.

4.4.2 During reflow, if it is not double-side board, it shouldn't place the side which is mounted *Bluetooth* as the first side to proceed. Mounting *Bluetooth* on the second Sid is suggested. Note: During reflow, since BGA type components are downwards, BGA solder joints are stretched. This may lead to the vulnerability of solder joints. It may eventually result in the brokenness of solder joints and other hidden dangers under the influence of external forces.

4.4.3 Interference Design which may lead to offset of module's elements should be avoided during reflow soldering technique design (i.e. designing furnace jig).

4.4.4 No need to add red glue or other adhesive on the lower part of module. Module recommended pad design can ensure the good solder ability of module PIN foot. Even for any special reason, modules are designed on the first side and need to be reflowed.

4.5 Wave soldering of PCBA after module is mounted

4.5.1 If process requirements require PCBA which is mounted with modules do wave soldering, please ensure special protection to the module in order to prevent its elements from soldering shortcut or other unpredictable hidden risks which may be caused by splash or other abnormity during wave soldering.

4.5.2 Wave soldering on PCBA which is mounted with module is not recommended. Pls wave soldering PCBA at the first and then manually soldering module on it.

4.6 Manual welding of other elements after module is mounted on PCBA

4.6.1 If some elements needs to be manually soldered onto PCBA after PCBA is mounted with module, such as welding wires, please protect the module with the cover during manual welding process, especially when the manual welding area is close to the module.

4.6.2 PCBA should be placed in the upper part of the manual welding bench, or quickly flows to the next bench. It is not suggested to place it in the lower part of welding bench, such as under welding bench.

5. Repair Instructions

5.1 The process of rework depends on the condition of repair.

The recommended repair method in this document is not the only method. The selection of repair operations depends on the actual hardware, and it should follow the basic technique requirements during repair.

5.2 Repair Technique Instruction

5.2.1 No matter it is disassembly or welding, repairing requires for the condition of the temperature ascension requirement ≤3°C /sec, highest temperature≤260°C

5.2.2 If repair elements exceed the storage period, it needs drying (refers to Table 2-1) before repairing

5.3 Module Disassembly

5.3.1 When disassembly, melting and reflowing soldering flux by proving fast, controllable and even heating. It ensures all solder joints melt at the same time. When disassembly, it should avoid any thermal or mechanical damage to modules, PCB, adjacent elements, and their solder joints.

5.3.2 It is recommended to adopt infrared heating or hot air heating method; It is recommended to design & use special jig for module disassembly or pickup

5.4 Module Welding/Replacement

5.4.1 Preparation before Welding：

5.4.1.1 Using irons and woven materials which are able to moisten soldering flux to remove the old soldering flux on soldering pad.

5.4.1.2 Cleaning pad & remove flux residues

5.4.1.3 Soldering flux pre-fill：Before module is installed into the board, using the appropriate way to add soldering tin on solder pads, it ensures the closeness of the height of solder paste after it melts and re-solidifies.

5.4.1.4 It is suggested to make jig or small printed tin steel mesh to repair solder paste printing

5.4.2 Installing modules into solder pads and ensure the correction of its direction. In order to ensure the temperature of each assembly element stays same during reflow, it is suggested to preheat modules. After heating soldering flux, it reflows to ensure reliable connection. When the solder joint maintains the appropriate reflow time at a predetermined temperature, it forms better IMC.

5.4.3 When the module is installed into the pad after printing, it is suggested to use special jig to pick it up.

5.4.4 Special repair equipment is recommended to be either selected or designed for repairing.

Appendix

1. Storage Requirements

1.1 Temperature: 22~28℃；

1.2 Humidity: <70%（RH）；

Vacuum packed and sealed in good condition to ensure 12 months of welding.

2. Humidity Sensitive Characteristic

2.1 MSL: 3 level

2.2 Once opened, SMT within 168 hours in the condition of temperature: 22~28℃ and humidity<60%（RH）. Once production line stops, modules should either be stored in the drying box or be vacuum packed. If it fails to meet above storage conditions, *Bluetooth* modules need drying. Drying parameters refer to Table 2-1.

2.3 Handling, storage, and processing should follow IPC/JEDECJ-STD-033

Table 2-1： Mounted or un-mounted SMD package drying reference condition

（User drying：Shop life starts after drying，Time=0）

Drying under 125℃		Drying under 90℃，≤5%RH		Drying under 40℃，≤5%RH	
Over floor life >72 hours	Over floor life≤72 hours	Over floor life >72 hours	Over floor life≤72 hours	Over floor life >72 hours	Over floor life≤72 hours
9 hours	7 hours	33 hours	23 hours	13 days	9 days

3. PCB Design Instruction

3.1 PCB Pad Surface Treatment

ENIG（Chemistry Ni/Au）、OSP are recommended for PCB surface treatment. ENIG（Chemistry Ni/Au）is preferred.

3.2 PCB Pad Design

3.2.1 In order to ensure high production efficiency and high reliability of solder joints, PCB pad design refers to recommended PCB pad size in the corresponding product specification.

3.2.2 Even only part of PINs are used, it is recommended to do full pad design,

symmetric pad design, or asymmetric pad design(refer to Figure 3-1). During reflow, if the pad paste melts, the module is vulnerable to non-balanced force pull. It may lead to PIN short circuit if the module deflects under the action of torque.

Figure 3-1: Asymmetric Pad Design

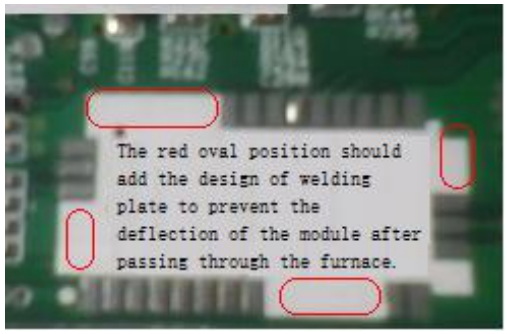

3.3.3 Layout Requirements

a. For PCB double sided layout, it is recommended to process on 2nd side.

b. The layout of other elements should be avoided on the outermost end 1mm area of module pad. In order to increase repair space, other elements layouts should be as far away from the module as possible. The minimum distance between the module pad and PCB board edge is 1.5mm.

3.3.4 Compatible Design Considerations

To prevent any hidden risks, module placement area（See the red rectangle in Figure 3-2 below） shouldn't include any pad design which intends to be compatible with other elements.

Figure 3-2: Module Placement Area Example

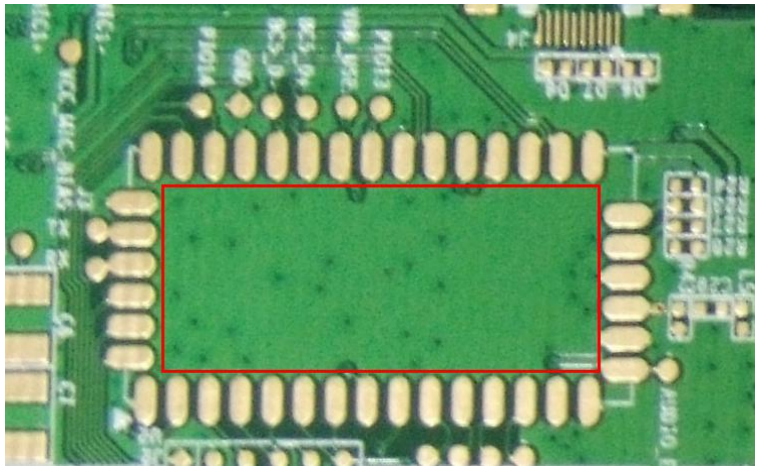

4. SMT Notes

4.1 All *Bluetooth* modules of our company are lead free. It is suggested to use

lead free process technique when SMT processing to prevent the reduction of the reliability of module welding technique which may be caused by the usage of lead production process technique.

Note：the lead BGA solder ball has low melting point（183℃），the lead-free BGA solder ball has high melting point（217℃-221℃）。When the temperature rises to 183 ℃, the solder paste is melting; When the temperature rises to 220℃, lead free BGA solder ball starts to melt, and it is in the state of coexistence of solid and liquid. If lead technology is used and the furnace starts cooling, the original welding surface structure of BGA elements is damaged, and a new alloyed layer of the welding surface cannot be formed. This may lead to lead free BGA solder joint failure during reflow, which results in pseudo solder joints and other reliability issues in further.

4.2 SMT stencil Design

Ladder stencil is recommended. Stencil opening design requirements are as follows:

4.2.1 The PIN area of the module is recommended to be thickened. For modules with different PCB thickness, the thickened solder paste is shown in the following table. The thickening position should be kept at least 1mm apart from other parts.

Number	Module PCB thickness	Thickness of the steel mesh	Note
1	0.8mm	0.15mm ladder	If there is a precise IC pad around the module, it is not recommended to exceed 0.15mm step thickness. The amount of solder paste can be increased by using the square of the epitaxial steel mesh
2	1.0mm	0.18mm ladder	
3	1.2mm	0.25mm ladder	
4	1.6mm	0.30mm ladder	

4.2.2 Opening width: 55%-65% of PCB PIN foot pad Pitch (centre-to-centre spacing)

(Since the actual width of the motherboard pad is not ensured, the opening width is determined by pitch.)

4.2.3 Opening length: based on PCB PIN foot, cutting 0.1-0.2mm towards inside, and extending 0.5-0.8mm towards outside. Outer extension pads maintain at least 0.25mm safety spacing with other elements. Cutting module pad opening if not enough space is left. Opening should be round corners.

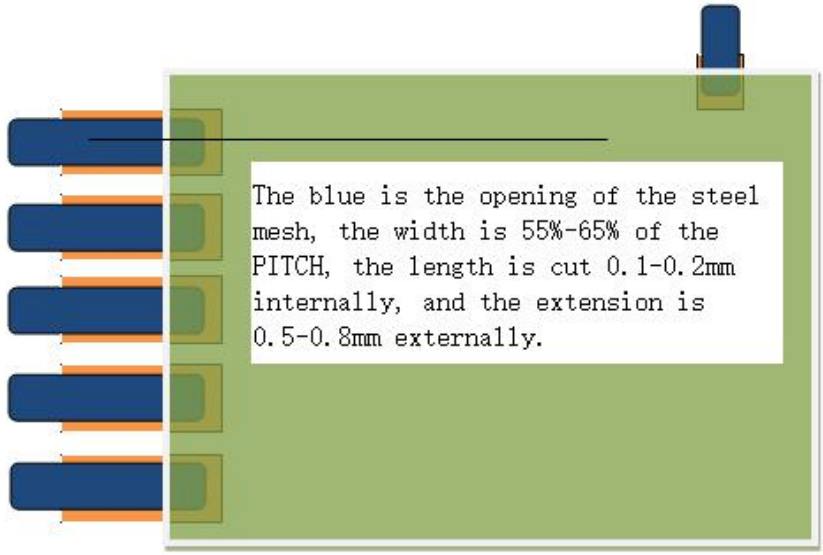

4.3 Reflow Profile

4.3.1When making the furnace temperature curve，it should add temperature measuring circuit under *Bluetooth* module's BGA to measure its real time temperature.

Recommended temperature parameters：

Increasing slope（℃/SEC）：1~2

Descending slope（℃/SEC）：-4~-1

Reflow time（S）：40~70

Peak teamperature（℃）：240-248

The actual furnace temperature curve for *Bluetooth* modules production:

Setpoints (摄氏)								
温区	1	2	3	4	5	6	7	8
上温区	130	150	175	175	180	215	260	250
下温区	130	150	175	175	180	215	260	250
Conveyor Speed (公分/分):	70.00							

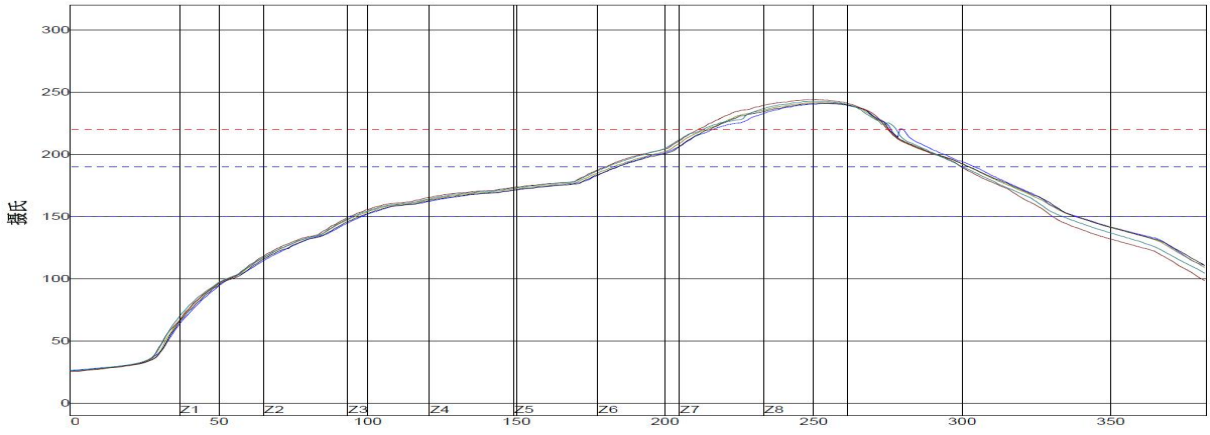

PWI= 76%	最高下降斜率		恒温时间150至190C		回流时间 /220C		最高温度		斜率1 (25-150C)	
	-1.45	70%	85.99	7%	60.86	-28%	240.94	-76%	2.13	13%
	-1.64	57%	86.78	12%	61.12	-26%	241.73	-57%	2.24	24%
	-1.61	59%	86.85	12%	60.20	-32%	241.12	-72%	2.21	21%
	-1.65	56%	86.01	7%	63.72	-9%	244.20	5%	2.24	24%
	-1.52	65%	85.95	6%	65.13	1%	242.71	-32%	2.20	20%
温差	0.20		0.90		4.93		3.26		0.11	

制程界限:

锡膏: FLC MODE(ROHS)

统计数名称	最低界限	最高界限	单位
斜率1 (目标=2.0)			
介于 25.0 和 150.0	1	3	度/秒
(计算斜率的时间距离= 35 秒)			
最高温度下降斜率	-4	-1	度/秒
(计算斜率的时间距离= 20 秒)			
恒温时间150-190摄氏度	70	100	秒
回流以上时间 - 220摄氏度	50	80	秒
最高温度	240	248	度 摄氏

4.4 Reflow Soldering

4.4.1 When PCBA which is mounted with *Bluetooth* module and it enters reflow, please strictly ensure PCBA boards to pass through furnace via track path. Passing through furnace via the net cover of reflow oven is prohibited.

Since *Bluetooth* contains BGA elements, the net cover vibration may lead to high rates of BGA solder welding defects.

4.4.2 During reflow, if it is not double-side board, it shouldn't place the side which is mounted *Bluetooth* as the first side to proceed. Mounting *Bluetooth* on the second sid is suggested. Note: During reflow, since BGA type components are downwards, BGA solder joints are stretched. This may lead to the vulnerability of solder joints. It may eventually result in the brokenness of solder joints and other hidden dangers under the influence of external forces.

4.4.3 Interference Design which may lead to offset of module's elements should be avoided during reflow soldering technique design (i.e. designing furnace jig).

4.4.4 No need to add red glue or other adhesive on the lower part of module. Module recommended pad design can ensure the good solder ability of module PIN foot. Even for any special reason, modules are designed on the first side and need to be reflowed.

4.5 Wave soldering of PCBA after module is mounted

4.5.1 If process requirements require PCBA which is mounted with modules do wave soldering, please ensure special protection to the module in order to prevent its elements from soldering shortcut or other unpredictable hidden risks which may be caused by splash or other abnormity during wave soldering.

4.5.2 Wave soldering on PCBA which is mounted with module is not recommended. Pls wave soldering PCBA at the first and then manually soldering module on it.

4.6 Manual welding of other elements after module is mounted on PCBA

4.6.1 If some elements needs to be manually soldered onto PCBA after PCBA is mounted with module, such as welding wires, please protect the module with the cover during manual welding process, especially when the manual welding area is close to the module.

4.6.2 PCBA should be placed in the upper part of the manual welding bench, or quickly flows to the next bench. It is not suggested to place it in the lower part of welding bench, such as under welding bench.

5. Repair Instructions

5.1 The process of rework depends on the condition of repair.

The recommended repair method in this document is not the only method. The selection of repair operations depends on the actual hardware, and it should follow the basic technique requirements during repair.

5.2 Repair Technique Instruction

5.2.1 No matter it is disassembly or welding, repairing requires for the condition of the temperature ascension requirement ≤3℃/sec， highest temperature≤260℃

5.2.2 If repair elements exceed the storage period, it needs drying (refers to Table 2-1) before repairing

5.3 Module Disassembly

5.3.1 When disassembly, melting and reflowing soldering flux by proving fast, controllable and even heating. It ensures all solder joints melt at the same time. When disassembly, it should avoid any thermal or mechanical damage to modules, PCB, adjacent elements, and their solder joints.

5.3.2 It is recommended to adopt infrared heating or hot air heating method; It is recommended to design & use special jig for module disassembly or pickup

5.4 Module Welding/Replacement

5.4.1 Preparation Before Welding：

5.4.1.1 Using irons and woven materials which are able to moisten soldering flux to remove the old soldering flux on soldering pad.

5.4.1.2 Cleaning pad & remove flux residues

5.4.1.3 Soldering flux pre-fill：Before module is installed into the board, using the appropriate way to add soldering tin on solder pads, it ensures the closeness of the height of solder paste after it melts and re-solidifies.

5.4.1.4 It is suggested to make jig or small printed tin steel mesh to repair solder paste printing

5.4.2 Installing modules into solder pads and ensure the correction of its direction. In order to ensure the temperature of each assembly element stays same during reflow, it is suggested to preheat modules. After heating soldering flux, it reflows to ensure reliable connection. When the solder joint maintains the appropriate reflow time at a predetermined temperature, it forms better IMC.

5.4.3 When the module is installed into the pad after printing, it is suggested to use special jig to pick it up.

5.4.4 Special repair equipment is recommended to be either selected or designed for repairing.

FCC regulatory information

This device complies with Part 15 of the FCC Rules. Operation is subject to the following two conditions: (1) this device may not cause harmful interference, and (2) this device must accept any interference received, including interference that may cause undesired operation.

Warning: changes or modifications not expressly approved by the party responsible for compliance could void the user's authority to operate the equipment.

End Device Labelling

Please notice that if the FCC identification number is not visible when the module is installed inside another device, then the outside of the device into which the module is installed must also display a label referring to the enclosed module. This exterior label can use wording such as the following: "Contains FCC ID: Z4T-WMBT01 " any similar wording that expresses the same meaning may be used.

RF Exposure Compliance

This equipment complies with FCC radiation exposure limits set forth for an uncontrolled environment. This equipment should be installed and operated with a minimum distance of 20cm between the radiator & your body. This transmitter must not be co-located or operating in conjunction with any other antenna or transmitter.

Installation Notice

The module is limited to OEM installation ONLY. The OEM integrator is responsible for ensuring that the end-user has no manual instruction to remove or install module.
The module is limited to installation in mobile application; A separate approval is required for all other operating configurations, including portable configurations with respect to Part 2.1093 and difference antenna configurations.

FCC Part 15B Compliance of End Device

The OEM integrator is responsible for ensuring that the host product which is installed and operating with the module is in compliant with Part 15B unintentional Radiator requirements, please note that For a Class B digital device or peripheral, the instructions furnished the user manual of the end-user product shall include the following or similar statement, placed in a prominent location in the text of the manual:
Note: This equipment has been tested and found to comply with the limits for a Class B digital device, pursuant to part 15 of the FCC Rules. These limits are designed to provide reasonable protection against harmful interference in a residential installation. This equipment generates, uses and can radiate radio frequency energy and, if not installed and used in accordance with the instructions, may cause harmful interference to radio communications. However, there is no guarantee that interference will not occur in a

particular installation. If this equipment does cause harmful interference to radio or television reception, which can be determined by turning the equipment off and on, the user is encouraged to try to correct the interference by one or more of the following measures:

—Reorient or relocate the receiving antenna.

—Increase the separation between the equipment and receiver.

—Connect the equipment into an outlet on a circuit different from that to which the receiver is connected.

—Consult the dealer or an experienced radio/TV technician for help

OEM Installation Guidance Document

FCC ID: Z4T-WMBT01

Conditions on using Seeed regulatory approvals:

A. Customer must ensure that its product (the "CUSTOMER Product") is electrically identical to Seeed reference designs. Customer acknowledges that any modifications to Seeed reference designs may invalidate regulatory approvals in relation to the CUSTOMER Product, or may necessitate notifications to the relevant regulatory authorities.

B. Customer is responsible for ensuring that antennas used with the product are of the same type, with same or lower gains as approved and providing antenna reports to Seeed.

C. Customer is responsible for regression testing to accommodate changes to Seeed reference designs, new antennas, and portable RF exposure safety testing/approvals.

D. Appropriate labels must be affixed to the CUSTOMER Product that comply with applicable regulations in all respects.

E. A user's manual or instruction manual must be included with the customer product that contains the text as required by applicable law. Without limitation of the foregoing, an example (for illustration purposes only) of possible text to include is set forth below:

2.1 General：

This equipment has been tested and found to comply with the limits for a Class B digital device, pursuant to Part 15 of FCC Rules. These limits are designed to provide reasonable protection against harmful interference in a residential installation. This equipment generates, uses, and can radiate radio frequency energy. If not installed and used in accordance with the instructions, it may cause harmful interference to radio communications. However, there is no guarantee that interference will not occur in a particular installation. If this equipment does cause harmful interference to radio or television reception, which can be determined by tuning the equipment off and on, the user is encouraged to try and correct the interference by one or more of the following measures:

-Reorient or relocate the receiving antenna
-Increase the distance between the equipment and the receiver.
-Connect the equipment to outlet on a circuit different from that to which the receiver is connected.
-Consult the dealer or an experienced radio/TV technician for help.
FCC Caution: Any changes or modifications not expressly approved by the party responsible for compliance could void the user's authority to operate this equipment.
System integrators must include the FCC ID on the end product.

2.2 List of applicable FCC rules：

The Seeed module is only FCC authorized (certified) for the transmitterspecific rule parts, FCC 15.247. OEM manufacturer is responsible for compliance to all other FCC rules that apply to the host.

2.3&2.6 Summarize the specific operational use conditions and FCC Radio-Frequency Exposure & Approval Conditions：

Transmitting antenna(s) can only be installed at the display section of computer. When this device is installed other than notebook computers, at least 20 cm separation distance shall be maintained between the transmitting antenna(s) to the body of user or nearby person.

2.4 Limited module procedures：

The module is an unrestricted module

2.5 Trace antenna designs：

The antenna(s) used for this transmitter must not be collocated or operating in conjunction with any other antenna or transmitter within a host device, except in accordance with FCC multi-transmitter product procedures.

2.7 Antennas：

The module grantee is responsible for providing the documentation to the system integrator on restrictions of use, for continuing compliance of the module including the maximum antenna gain (3dBi),The antenna type is ceramic antenna.

2.8 Label and compliance information：

The regulatory label on the final system must include the statement:“Contains FCC ID:FCC ID: Z4T-WMBT01” using electronic labeling method as documented in KDB 784748.

2.9 Information on test modes and additional testing requirements：

OEM manufacturer should perform additional verification/validation on supported modes and is responsible for validation testing of module + host.
The final system integrator must ensure there is no instruction provided in the user manual or customer documentation indicating how to install or remove the transmitter module except such device has implemented two-ways authentication between moduleand the host system.

2.10 Additional testing, Part 15 Subpart B disclaimer：

This device complies with Part 15 of the FCC Rules. Operation is subject to the following

two conditions: (1) This device may not cause harmful interference, and (2) this device must accept any interference received, including interference that may cause undesired operation.
FCC Caution: Any changes or modifications not expressly approved by the party responsible for compliance could void the user's authority to operate this equipment.

FCC INFORMATION (additional)

This device is intended only for OEM integrators under the following conditions: The module must be installed in the host equipment such that 20 cm is maintained between the antenna and users, and the transmitter module may not be co-located with any other transmitter or antenna. The module shall be only used with the internal antenna(s) that has been originally tested and certified with this module. As long as 3 conditions above are met, further transmitter test will not be required. However, the OEM integrator is still responsible for testing their end-product for any additional compliance requirements required with this module installed (for example, digital device emissions, PC peripheral requirements, etc.).
Module label:
FCC ID: Z4T-WMBT01
The final end product must be labeled in a visible area with the following: “Contains FCC ID：Z4T-WMBT01 ”. Information that must be placed in the end user manual: The OEM integrator has to be aware not to provide information to the end user regarding how to install or remove this RF module in the user's manual of the end product which integrates this module. The end user manual shall include all required regulatory information/warning as show in this manual.
The module not applicable Limited module procedures. The module is a Single module and complies with the requirement of FCC Part 15.2
The module has its own antenna, anddoesn'tneedahost's printed board microstriptrace antenna etc, Not applicable Trace antenna designs