DASCOM

User Manual DC-3300 Card Printer

Important Safety Instructions (English)

Read the following instructions thoroughly before starting up your printer.

- The device and power supply must all times be easily accessible.
- Never carry out maintenance or repair work yourself. Always contact a Dascom qualified service technician.
- Keep this user guide in a place which is easily accessible at all times.
- Place the printer on a solid and level base for reliable operation.
- Never place the printer in the vicinity of inflammable gas or explosive substances.
- Ensure the printer is connected to a socket with the correct voltage.
- Always disconnect the printer from power source before opening the device to perform maintenance work or remedy errors.
- Do not expose the printer to high temperature, direct sunlight, or dust.
- Keep all liquids away from the printer.
- Protect the printer from shock, impact and vibration.
- Make sure that both printer and computer are switched off before connecting the data cable.
- The print head will become very hot during printing; avoid contact with the print head after printing has finished.
- Do not perform any operation or action in any way other than those provided in this manual. When in doubt, contact your Dascom dealer or customer support.

Wichtige Sicherheitshinweise (German)

Lesen Sie bitte diese Sicherheitshinweise durch, bevor Sie den Drucker in Betrieb nehmen.

- Das Gerät und die Netzsteckdose müssen jeder Zeit leicht zugänglich sein.
- Führen Sie Wartungsarbeiten und Reparaturen keinesfalls selbst aus, sondern verständigen Sie immer einen qualifizierten Servicetechniker.
- Bewahren Sie diese Dokumentation an einem jederzeit zugänglichen Ort auf.
- Den Drucker auf stabilem und ebenem Untergrund so aufstellen, dass er nicht zu Boden fallen kann.
- Stellen Sie den Drucker keinesfalls in der Nähe von leicht entzündlichen Gasen oder explosiven Stoffen auf.
- Den Drucker nur an eine Steckdose mit der richtigen Spannung anschließen.
- Wenn Sie den Drucker vom Netz trennen wollen, den Drucker ausschalten und immer den Netzstecker an der Steckdose ziehen.
- Den Drucker weder hohen Temperaturen noch direktem Sonnenlicht und Staub aussetzen.
- Keine Flüssigkeiten mit dem Drucker in Berührung bringen.
- Den Drucker keinen Erschütterungen, Stößen oder Vibrationen aussetzen.
- Sicherstellen, dass der Drucker und der Computer ausgeschaltet sind, bevor das Datenkabel angeschlossen wird.
- Der Druckkopf wird während des Druckens heiß. Vor dem Berühren deshalb einige Zeit abkühlen lassen.
- Weichen Sie bei der Bedienung des Druckers nicht von den Anweisungen in der Dokumentation ab. Bei Unklarheiten wenden Sie sich bitte an Ihren Händler oder Ihren Kundendienst.

Consignes importantes de sécurité (French)

Lire attentivement les instructions suivantes avant de mettre l'imprimante en service.

- Le dispositif et la prise principale doivent toujours être accessibles facilement.
- Ne jamais effectuer soi-même les travaux d'entretien et de réparations. Contacter toujours un dépanneur qualifié.
- Placer l'imprimante sur un support stable de façon à ce qu'elle ne puisse pastomber.
- Ne jamais placer l'imprimante à proximité de sources de gaz aisément inflammables ou de substances explosives.
- Ne connecter l'imprimante à une prise que lorsque la tension est correcte.
- Pour déconnecter l'imprimante de l'alimentation principale, mettre l'imprimante hors tension et toujours débrancher le connecteur secteur de la prise murale.
- Ne pas exposer l'imprimante à des températures élevées, à la lumière directe du soleil ou à la poussière.
- Ne pas mettre l'imprimante en contact avec des liquides.
- Ne pas exposer l'imprimante à des chocs, impacts ou vibrations.
- S'assurer que l'imprimante et l'ordinateur sont hors tension avant de connecter le câble de données.
- La tête d'impression est brûlante pendant l'impression. C'est pourquoi laissez-la refroidir quelques instants avant d'y toucher.
- N'exécutez aucune opération ni action d'une autre manière que celle indiquée dans ce manuel. En cas de doute, veuillez contacter votre distributeur ou service après-vente.

Indicazioni di sicurezza importanti (Italian)

Prima di mettere in funzione la stampante, leggere attentamente le seguenti indicazioni.

- Il dispositivo e la presa di corrente devono essere sempre facilmente accessibili.
- Non eseguire mai da sé gli interventi di manutenzione e riparazione, ma rivolgersi sempre a un tecnico di assistenza qualificato.
- Conservare le presenti istruzioni per l'uso in un luogo sempre accessibile.
- Collocare la stampante su una superficie stabile, per evitare che cada a terra.
- Non collocare la stampante in prossimità di gas facilmente infiammabili o di sostanze esplosive.
- Collegare la stampante a una presa di corrente con tensione adeguata.
- Per scollegare la stampante dalla rete di alimentazione, spegnere la stampante e disinserire sempre il connettore di rete dalla presa.
- Non esporre la stampante ad elevate temperature né alla luce solare diretta e alla polvere.
- Evitare il contatto della stampante con liquidi.
- Non esporre la stampante a colpi, scosse o vibrazioni.
- Verificare che la stampante e il computer siano spenti prima di collegare il cavo di trasmissione dati.
- Durante la stampa, la testina si surriscal-da notevolmente. Prima di toccarla, se necessario opportuno quindi lasciarla raffreddare qualche istante.
- Non eseguire alcuna operazione o azione se non nella maniera descritta nel presente manuale. In caso di dubbio, contattare il rivenditore o dalla società incaricata dell'assistenza.

Instrucciones de seguridad importantes(Spanish)

Lea las siguientes instrucciones con esmero antes de poner la impresora en servicio.

- El dispositivo y la toma de corriente deben estar ubicados de forma que sea fácil acceder a ellos.
- Nunca lleve a cabo trabajos de mantenimiento o reparación Ud. mismo, sino consulte a un técnico de servicio calificado.
- Guarde las presentes instrucciones de servicio en un lugar de fácil acceso en cualquier momento.
- Ponga la impresora sobre un superficie estable de manera que no pueda caer al suelo.
- Nunca coloque la impresora en la vecindad de gases inflamables o sunstancias explosivas.
- Asegure conectar la impresora sólo a un enchufe con un voltaje correcto.
- Cuando quiera desconectar la impresora de la red, apague la impresora y siempre hale de la clavija de alimentación del enchufe nunca del cable.
- No exponga la impresora a temperaturas altas, a la luz solar directa y al polvo.
- No ponga la impresora en contacto con fluidos.
- Nunca exponga la impresora a sacudidas, choques o vibraciones.
- Asegúrese de que la impresora y el ordenador estén apagdos antes de conectar el cable de datos.
- La cabeza de impresión se pone muy caliente durante la impresión. Por lo tanto, Déjela enfriarse algún tiempo antes de tocarla.
- No permita que se realice cualquier operación o acción de una forma diferente a lo que se señala en el manual. En caso de duda, póngase en contacto con su comerciante o con su servicio post-venta.

Правила по технике безопасности. (Russian)

Прочитайте, пожалуйста, инструкцию по технике безопасности перед включением в работу принтера.

- Устройство и розетка должны быть всегда легко доступна.
- Не выполняйте технические работы и ремонт техники самостоятельно, но сообщайте о неисправностях квалифицированным сервисным техникам.
- Данная инструкция должна быть всегда доступна каждому пользователю.
- Установите принтер на ровном и стабильном месте так, чтобы он не смог упасть на пол.
- Ни в коем случае не ставьте принтер вблизи легко воспламеняющихся газов и взрывчатых веществ.
- Включайте принтер в розетку только с соответствующим напряжением.
- Если Вы хотите отключить принтер от напряжения, сначала выключите принтер сам и затем выньте штекер из розетки.
- Берегите принтер от нагревания, от попадания на него прямых солнечных лучей и пыли.
- Не допускайте попадания жидкости на принтер.
- Нельзя подвергать принтер тряске, ударам и вибрации.
- Убедитесь, что принтер и компьютер выключены, только после этого соедините принтер с компьютером.
- Печатающая головка нагревается во время работы принтера. Поэтому подождите какое-то время, прежде чем дотронуться до нее.
- Пользуйтесь принтером так, как это написано в документации. Если у Вас возникают неясности, обращайтесь с вопросами к Вашим продавцам или в сервисный центр.

Instruções Importantes sobre Segurança (Portuguese)

Leia as instruções de segurança antes de usar a impressora.

- A impressora e a tomada devem ser facilmente em todos os momentos acessíveis.
- Consulte sempre um técnico qualificado para executar uma reparação .
- Coloque a impressora sobre uma base sólida e nivelada, para que ela não sofra quedas.
- Jamais instale a impressora nas proximidades de lugares onde haja gás inflamável ou substâncias explosivas.
- Assegure-se de conectar a impressora à tomada elétrica com a voltagem apro-priada.
- Quando desligar a impressora da rede, desligue sempre a impressora e retire o cabo da tomada.
- Não exponha a impressora a temperaturas altas ou luz solar direta.
- Não aproxime substâncias líquidas da impressora.
- Proteja a impressora de choques, impactos e vibrações.
- Desligue a impressora e o computador antes de conectar o cabo da rede.
- A cabeça da impressora pode ficar muito quente . Portanto, espere algum tempo antes de tocá-la.
- Não faça nenhuma operação ou ação além das recomendadas neste manual. Em caso de dúvida, contate seu revendedor ou companhia de serviço.

Önemli Güvenlik Talimatları (Turkish)

Lütfen, yazıcıyı işletime geçirmeden önce bu güvenlik talimatlarını bütünüyle dikkatle okuyun.

- Cihaz ve elektrik prizinin her zaman kolayca erişilebilir olması gerekir.
- Bakım ve tamir çalışmalarını kesinlikle ve hiçbir surette kendi başınıza yapmayın; her zaman kalifiye bir uzman servis-teknisyenine haber verin.
- Yazıcıyı, üzerinden yere düşmesi mümkün olmayacak sabit ve düz bir zemine yerleştirin.
- Yazıcıyı kesinlikle ve hiçbir surette kolayca yanabilecek gaz veya patlayıcı maddeler içeren nesnelerin yakınına koymayın.
- Yazıcı akım kablosunu sadece doğru gerilime sahip bir prize takın.
- Yazıcıyı şebeke ağından ayırmak istediğinizde, yazıcıyı kapatın ve ağ-fişini her zaman prizden çıkartın.
- Yazıcıyı ne yüksek ısılı ne de doğrudan güneş ışığına ve toza mâruz kalan mekânlarda bulundurun.
- Yazıcı hiçbir sıvı maddeyle temasta olmamalıdır.
- Yazıcı hiçbir sarsıntıya, darbeye veya titreşime mâruz kalmamalıdır.
- Veri kablosu bağlanmadan önce hem yazıcının hem de bilgisayarın kapalı olduklarından emin olmalısınız.
- Yazıcının başı basma esnasında yüksek ısıya ulaşıyor. Bu yüzden lütfen dokunmadan önce kısa süre soğumasını bekleyin.
- Yazıcının işletimi ve kullanımında bu dokümantasyondaki talimatların hiç dışına çıkmayın. Sorunlu görünen hususlarda lütfen imâlatçınıza veya müşteri hizmetleri servisinize başvurun.

TRADEMARK ACKNOWLEDGEMENTS

“Windows”, “Windows 7”, ”Windows 8”, “Windows 10”, “Windows XP” and “Windows Vista” are trademarks of Microsoft Corporation.

All other product names and company names appearing in this manual are the registered trademarks or trademarks of their respective holders.

About This Manual

This manual provides information that describes the basic operation, enabling safe and correct use to the operators of DC-3300 Printer.

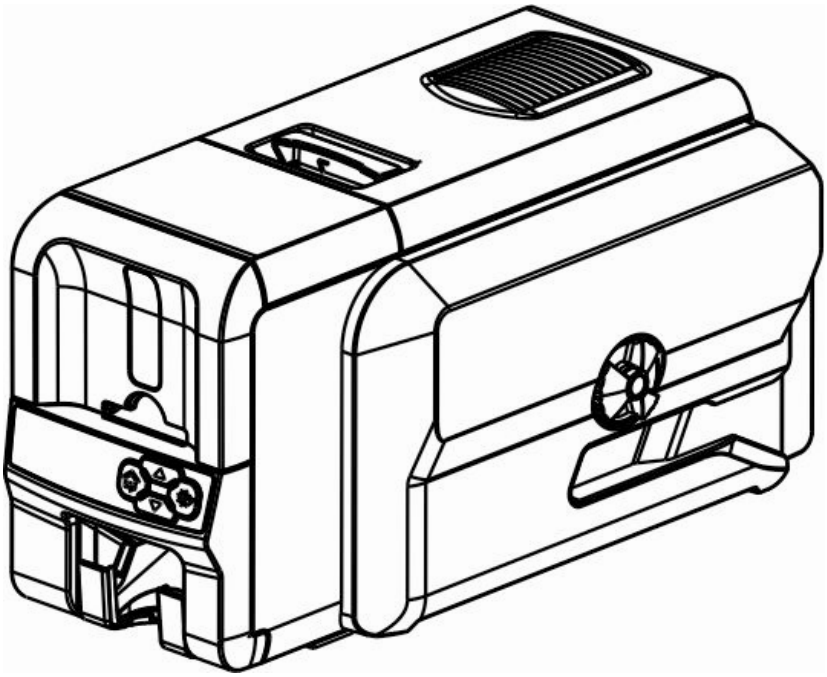

Symbol Description

The symbols in this manual are identified by their level of importance, as defined below. Read the following carefully before handling the product.

STOP	CAUTION: Provides information that must be observed to prevent damage to the equipment or loss of data.
	NOTE: Advises you of information that is essential to complete a task.

TABLE OF CONTENTS

CHAPTER 1 INTRODUCTION 1

1.1 Unpacking 1
1.2 Operating the Printer Safely 3
1.3 Printer Components 5
1.3.1 Component and function 5
1.3.2 Control Panel 7
1.4 Attaching Power 8
1.5 Connecting to Computer 9
1.5.1 Connecting to Computer via USB port 9
1.5.2 Connecting to Computer via Ethernet port 9
1.6 Duplex option 10
1.7 Installing Windows Driver 11
1.7.1 Installing Windows Driver via USB 11
1.7.2 Installing Windows Driver via Ethernet 14

CHAPTER 2 INSTALLATION 23

2.1 Installing Cards 23
2.1.1 Card Specifications 23
2.1.2 Loading the cards 24
2.1.3 Adjusting the card inlet according to the thickness of the cards 25
2.1.4 Managing Rejected Cards 25
2.2 Replacing the Ribbon 26
2.3 Replacing the Cleaning Roller 28
2.4 Printing card 29
2.5 Updating Firmware 39

CHAPTER 3 NORMAL MODE AND USER MODE 41

3.1 Normal Mode 41
3.2 User Mode 41
3.3 The major menus 44
3.3.1 Sub-menus for Printer Info 44
3.3.2 Sub-menus for Head Info 44
3.3.3 Sub-menus for Version Info 44
3.3.4 Sub-menus for Printer Setup 45
3.3.5 Sub-menus for card setup 45
3.3.6 Sub-menus for Ribbon Setup 45
3.3.7 Sub-menus for Image Setup 45
3.3.8 Sub-menus for Interface Setup 46
3.3.9 Sub-menus for Cleaning 46
3.3.10 Sub-menus for Option 46
3.3.11 Sub-menus for Reset Default 46

CHATPER 4 CLEANING 47

4.1 Cleaning with a Cleaning Card 47
4.2 Maintaining the print head 47

CHATPER 5 TROUBLESHOOTING 48

5.1 Warning Messages and Troubleshooting 48
5.2 Valuable Help from You For Troubleshooting 49
5.3 Troubleshooting 50
5.3.1 Faults Related to Printing 50
5.3.2 Clear Jammed Card 52
5.3.3 Change the Print Head 53
5.4 Technical support 53
5.4.1 DASCOM partner network 53
5.4.2 More information 54

CHAPTER 6 SPECIFICATION 55

APPENDIX I OPTIONS 57

APPENDIX II FCC STATEMENT 60

APPENDIX III DASCOM EPRESENTATIVES 61

Chapter 1 Introduction

Thank you for choosing Dascom® DC-3300 card printer. You can print high-quality cards of different colors and styles with this printer. The printer should use the consumables and accessories provided by Dascom. For more details, please visit our website WWW.DASCOM.COM.

1.1 Unpacking

Open the package, take out the printer and remove the protect material. Check if the parts and accessories in the box are complete as the following picture. If found any damage. Please contact the carrier and notify your authorized Dascom reseller to realize the steps to be taken.

When repairing the printer, you must provide the complete original package (outer crate, wedge and package). If send back the printer without original package, or the accessories are damaged in transit, the warranty of accessories will be invalid. The new packing charge for the printer will be charged by yourself.

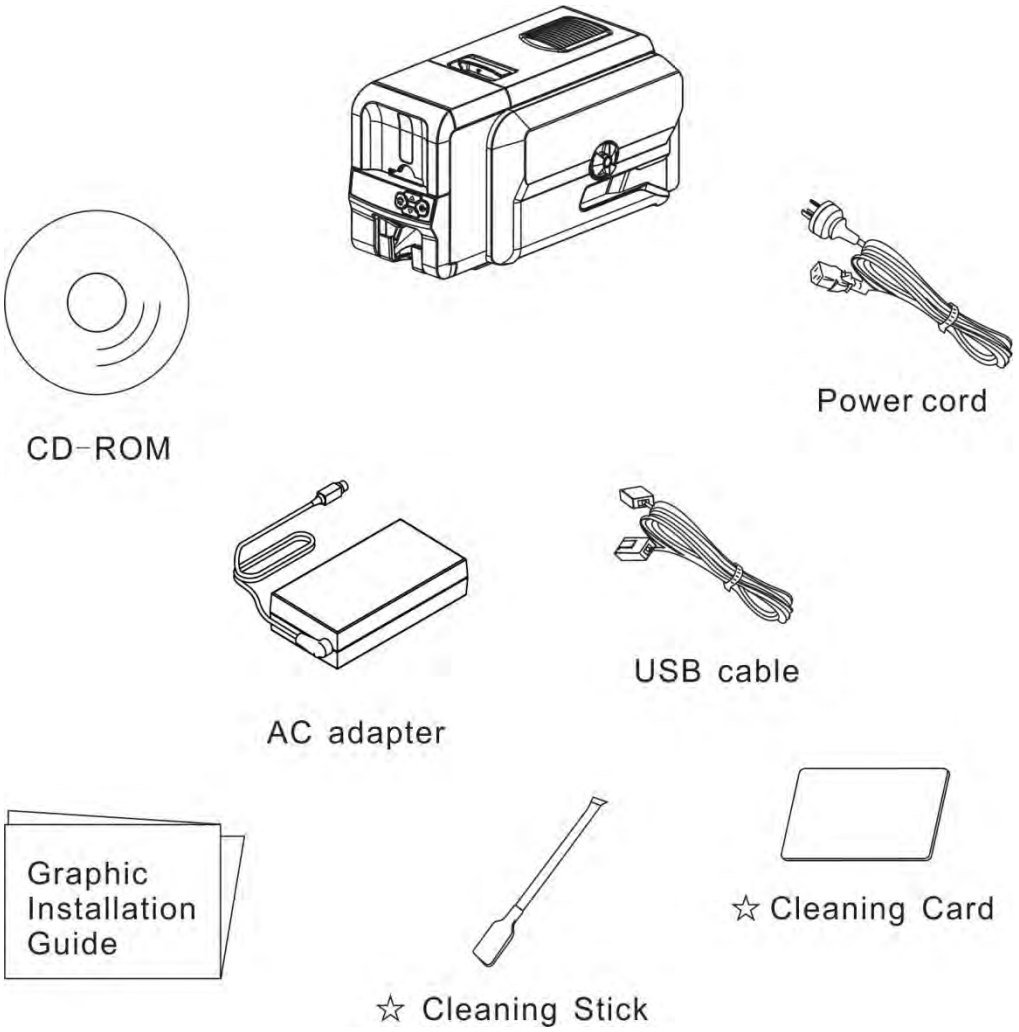

The package contents vary with different customized order requirements.

Package Contents:

Standard	Printer	1 unit	
	Power cord	1 piece	
	USB cable	1 piece	
	Cleaning Card	1 piece	option
	Cleaning Stick	1 piece	option
	AC adapter	1 piece	
	Graphic Installation Guide	1 piece	
	CD-ROM	1 piece	Includes Driver, CardEditor software, CardEditor User Guide, User manual, Installation Guide

1.2 Operating the Printer Safely

The following precautions must be observed to assure safe operation of your printer. Do not do anything that is not described in this manual. Doing so could cause an unexpected failure. The manufacturer is not responsible for any problems caused by incorrect operation of the printer.

Installation location	Do not install the printer in a damp or dusty location.
	Do not install the printer near flammable or explosive materials or a heater, stove or any other device that produces heat. Do not place the printer near volatile combustible materials such as combustible materials.
	Place the printer away from walls to maintain air flow. Also, maintain at least 30 cm (12 inches) of open space above the printer. Blocking vents may cause the printer to overheat and fail prematurely.
	Do not install printer on an unstable table, on a slant, or any place where there is excessive vibration.
	Do not install the printer in a location susceptible to rapid fluctuations in temperature.
	Do not install the printer in a location exposed to direct sunlight.
Power supply	Use a dedicated power cable and do not use an extension cord with multiple outlets.
	Be sure to remove any dust from the plug and electrical outlet. Humidity produces a micro-current on the surface causing overheating.
	Do not damage or modify the Power Cable. Also, do not place heavy objects, pull, or bend power cord excessively.
	Do not plug in or unplug the Power Cable if your hands are wet.
	Ensure a ground wire is connected. When connecting the ground wire, note the following cautions. **Recommended connections for ground wires** Electrical outlet ground terminal Ground terminals installed as type A, B, or C A copper rod 65 cm (25.6 inches) or longer buried in the ground. **Not permitted for ground wires** Gas piping (risk of fire or explosion) Water pipes or taps (water pipes that include plastic piping cannot act as a ground However, if a water pipe is configured to act as a ground, then connection of a ground wire is permitted.) Telephone line ground wires or lightning conductors (danger of high current flow in the event of a lightning strike.)
	Be sure to turn off power and unplug the plug from electrical outlet before moving the printer.
	Pull on the plug or cable when unplugging it from an electrical outlet.
	Do not use an under-rated extension cord.
Handling	Do not use flammable sprays near the printer.
	Do not touch anything inside the printer unless specified in this manual.
	Do not place heavy items on the printer and do not lean on the printer.
	While the printer is operating, do not turn off the power, unplug the power cable, or look inside (open) the printer.

WARNING
The lower part of the Top Access Cover, the printer internal heat roller section, and the thermal head section become very hot. Ensure you do not touch these three locations.

- The cooling fan is always running for cooling inside the printer. This is not a malfunction.
- Contact your reseller if there is a current leak.
- The printer may cause static, flickering or interrupt reception of televisions or radios if they are too close to the printer.
- The lower part of cover top, internal heating platen and printer head may produce high temperature, please don't touch these three parts.

Under the following conditions images on cards may deteriorate or cards may warp after printing:

- The surface of the card is in contact for an extended period with a vinyl card holder or synthetic leather or other material that contains a plasticizer.
- The surface of the card is exposed to direct sunlight for an extended period.
- The card is repeatedly rubbed against a hard object such as a key.
- The faces of two cards are in contact for an extended period.
- The card is kept for an extended period in a very hot location such as a car parked in the sun.
- The card is bent, or used with excessive force.

If a card with a magnetic strip is placed near a magnetic source, the data on the strip could become corrupted.
Additionally, if an IC chip card is bent, or used with excessive force, the IC chip may be damaged.

1.3 Printer Components

1.3.1 Component and function

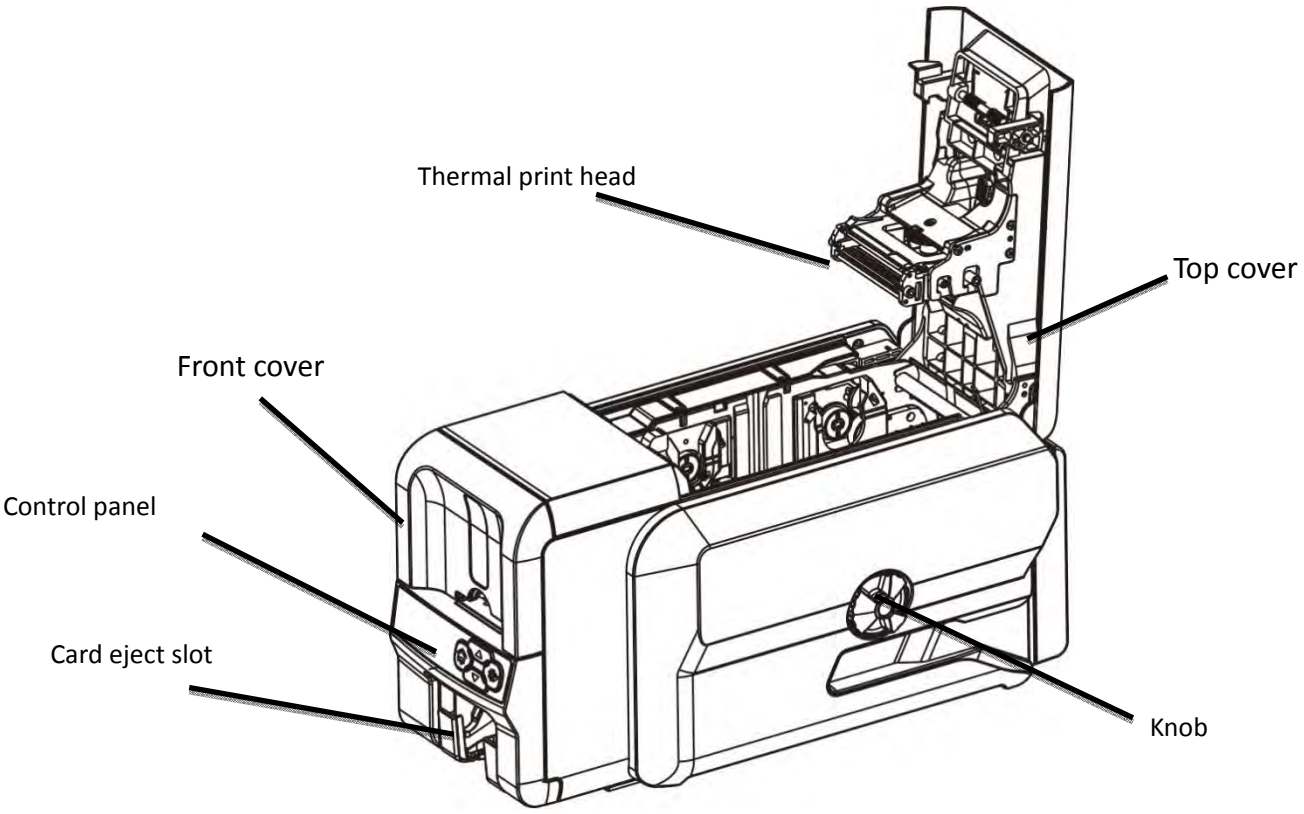

Part name	Function
Top cover	Protects the print head and the internal components. Open to replace the ribbon.
Front cover	Open to load cards. Max. 100 pieces of 0.76mm thickness cards can be placed.
Thermal print head	Core component of the printer.
Control panel	Includes the keys, the LCD Panel, and LED indicator for operating the printer.
Card eject slot	Ejects printed cards.
Knob	If the jammed card can not be ejected, power off the printer and turn the knob.

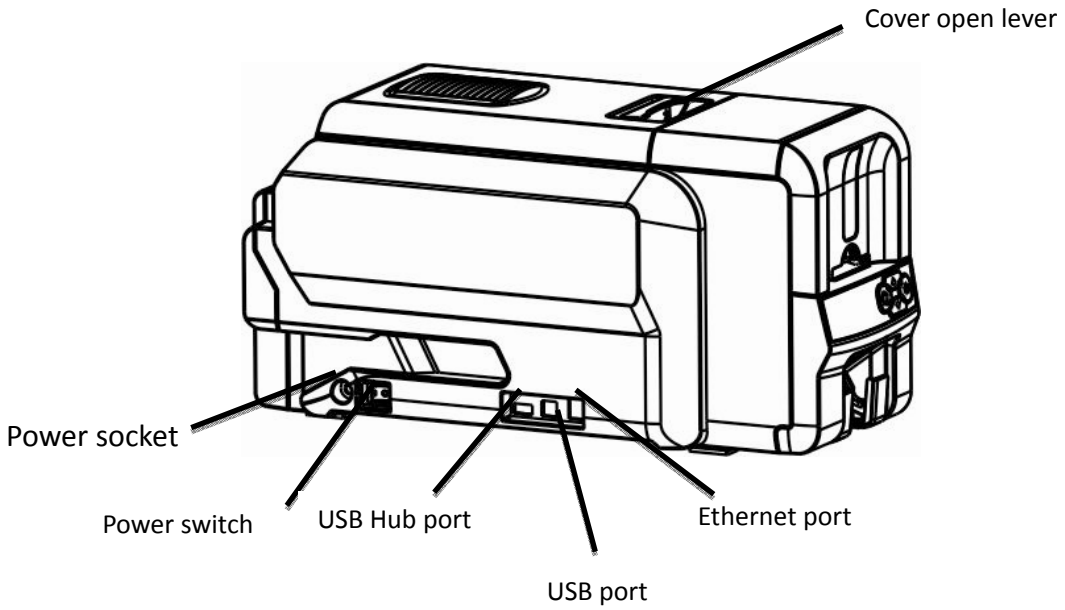

Part name	Function
Cover open lever	Pull the lever up to open the top cover.
Power socket	Used to connect Power Cable.
Power switch	Turns power on and off.
USB Hub port	Connect to the printer via USB Hub port.
USB port	Connect to the printer via USB port.
Ethernet port	Connect to the printer via Ethernet port.

1.3.2 Control Panel

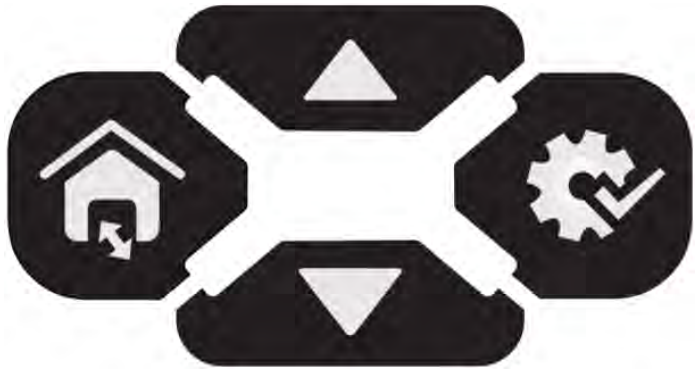

Button

There are four buttons.

Logo	Name	Function
	【Menu/Exit】 key	Enter or exit current setup
	【Set】 key	Confirm current setting
▲/▼	【Up/Down】 key	Choose between or navigate settings

Status LED and buzzer

There're two LED lights: blue means ready, red means error.

The following combinations of different lights and buzzer show different statuses of the printer.

Printer Status	Ready LED (Blue)	Error LED (Red)	Buzzer
Initiating	Flashes	Flashes	/
Heating			
Ready	On	Off	/
Menu setup	On	On	/
Printing	Flashes	Off	/
Warning	Flashes	Flashes	/
Error	Off	On	Buzz constantly

LCD

User can view the status of printer and/or modify the parameters of printer via the LCD.

1.4 Attaching Power

（1）Make sure the printer and the computer are powered off. ①

（2）Connect the power adapter to the printer.②

（3）Connect the power cord to the power adapter.③

（4）Connect the power cord to the power socket. ④

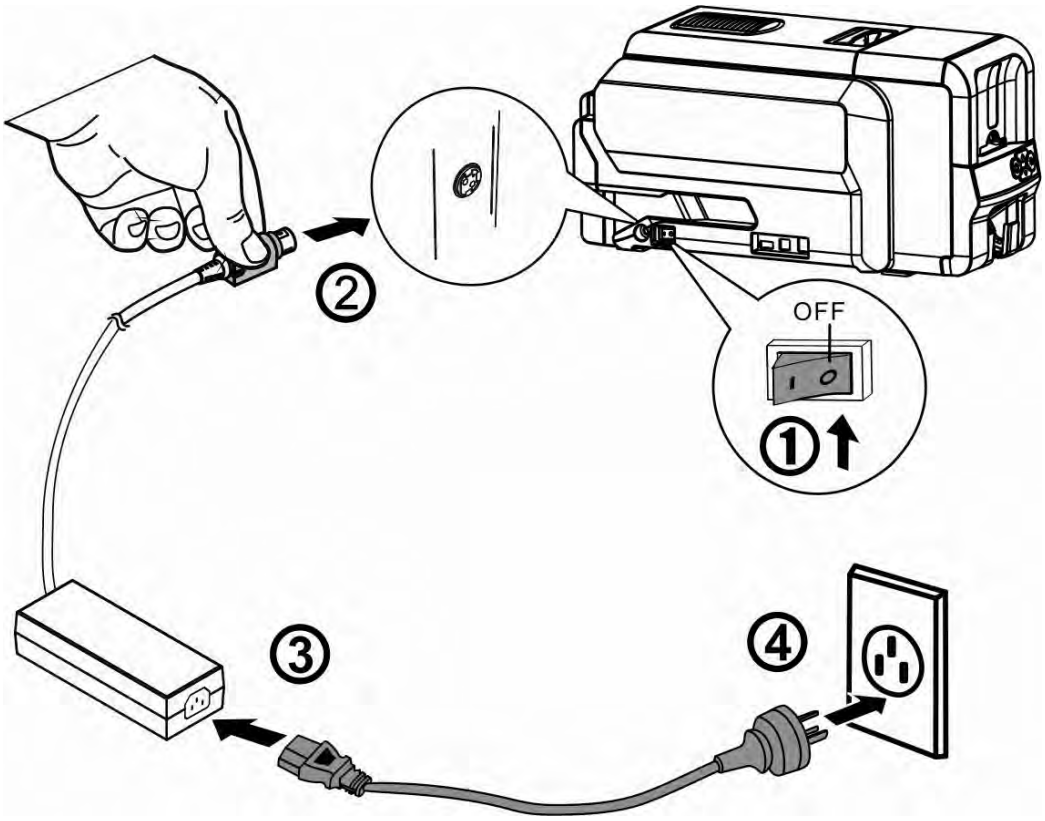

- Power on and power off

Press the power switch: “I”, switch on the printer.
Press the power switch: “O”, switch off the printer.

1.5 Connecting to Computer

The standard On-board ports of this printer are a USB port and a Ethernet port. All the ports are located on the left side of the printer, please choose the proper port.

（1）Ensure your printer is switch off.

（2）Insert the interface cable into the corresponding port.

（3）Connect the other end of the interface cable to the host computer.

1.5.1 Connecting to Computer via USB port

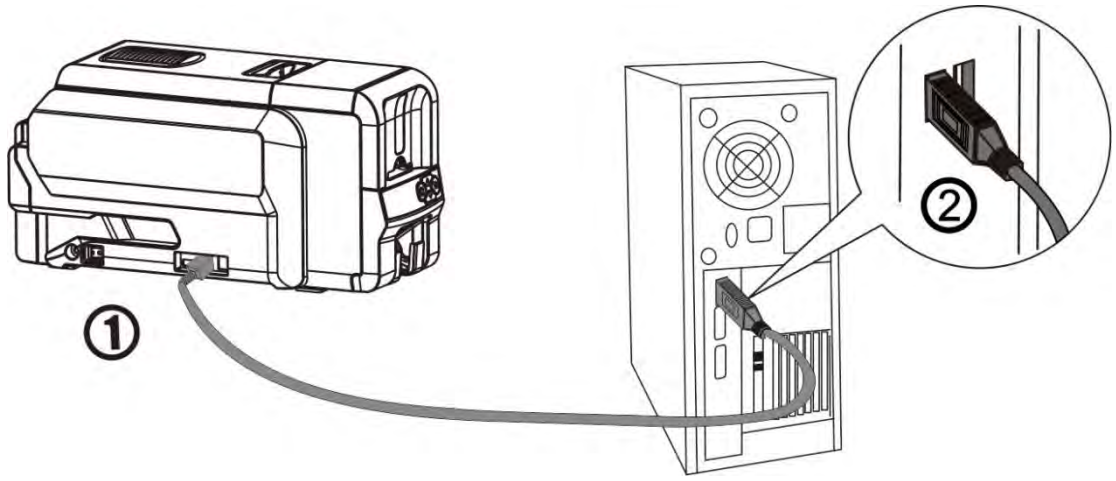

1.5.2 Connecting to Computer via Ethernet port

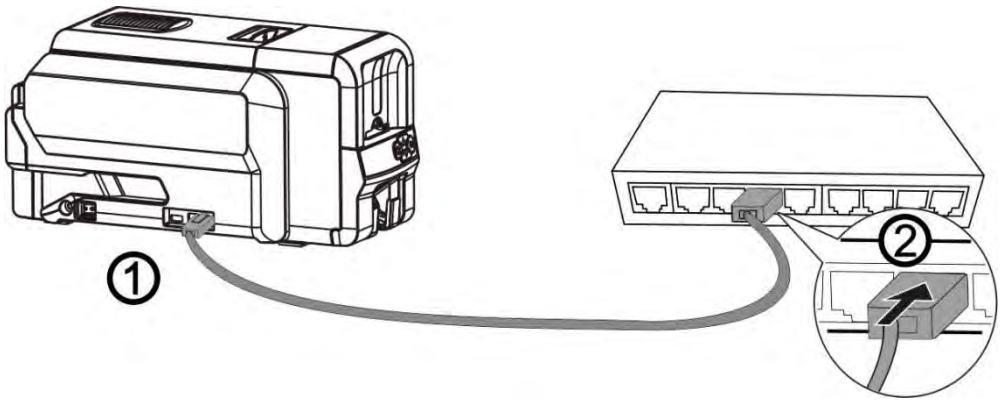

1.6 Duplex option

DC-3300 can be configured with a Duplex option based on the customers' requirement. In User Mode, setup the menu to implement Double-Sided Printing and Rear Side Ejecting functions.

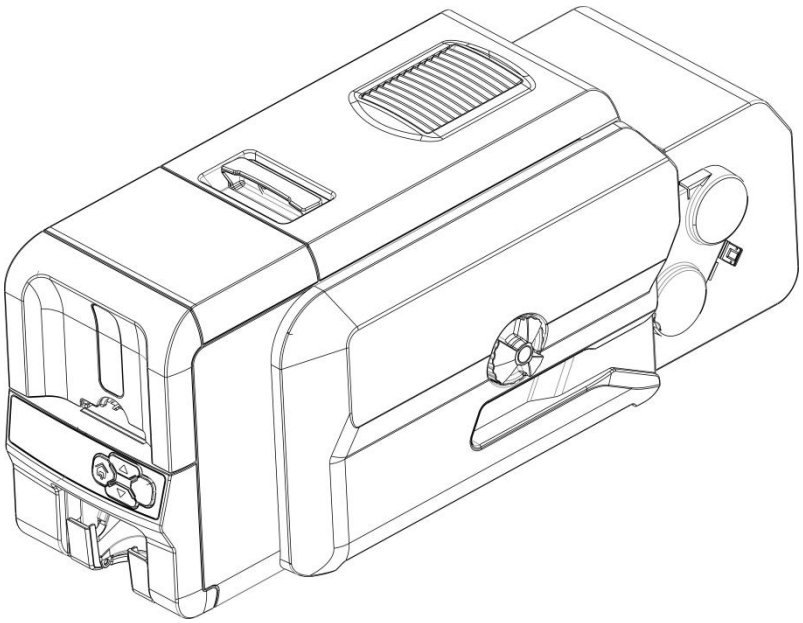

Front view of the printer with a duplex option

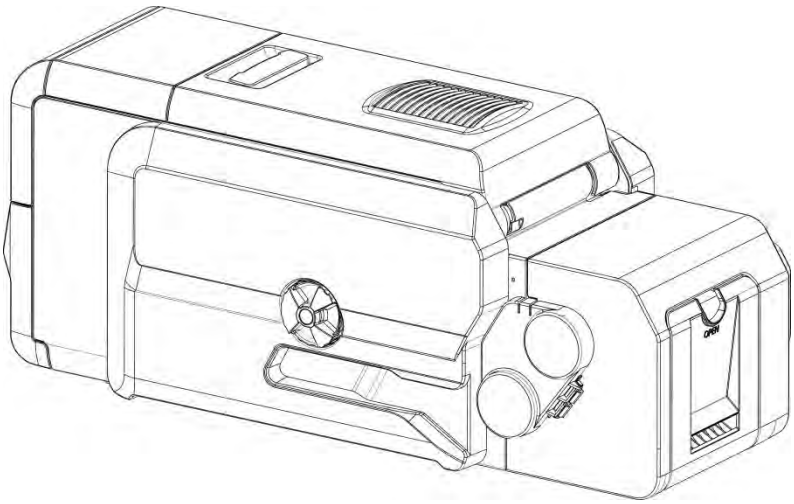

Rear view of the printer with a duplex option

1.7 Installing Windows Driver

The driver is the connection and transformation platform between the card printer and the computer operating system to achieve the interactive processing of the information.

User can set up relevant settings, get print status and etc. via the driver. We have provided the Driver on the accompanied CD.

> The guide steps are operated with Win 10 system.

1.7.1 Installing Windows Driver via USB

Connect the USB cable to the computer and turn on the printer. Put the CD-ROM into the computer, then choose Printers driver Install program. The Install program will guide you through the necessary steps to finish the whole installation.

> Please follow the installer carefully. Some Windows versions require users to have administrator privileges to install the driver.

（1） Select USB connection. Click “Next”.

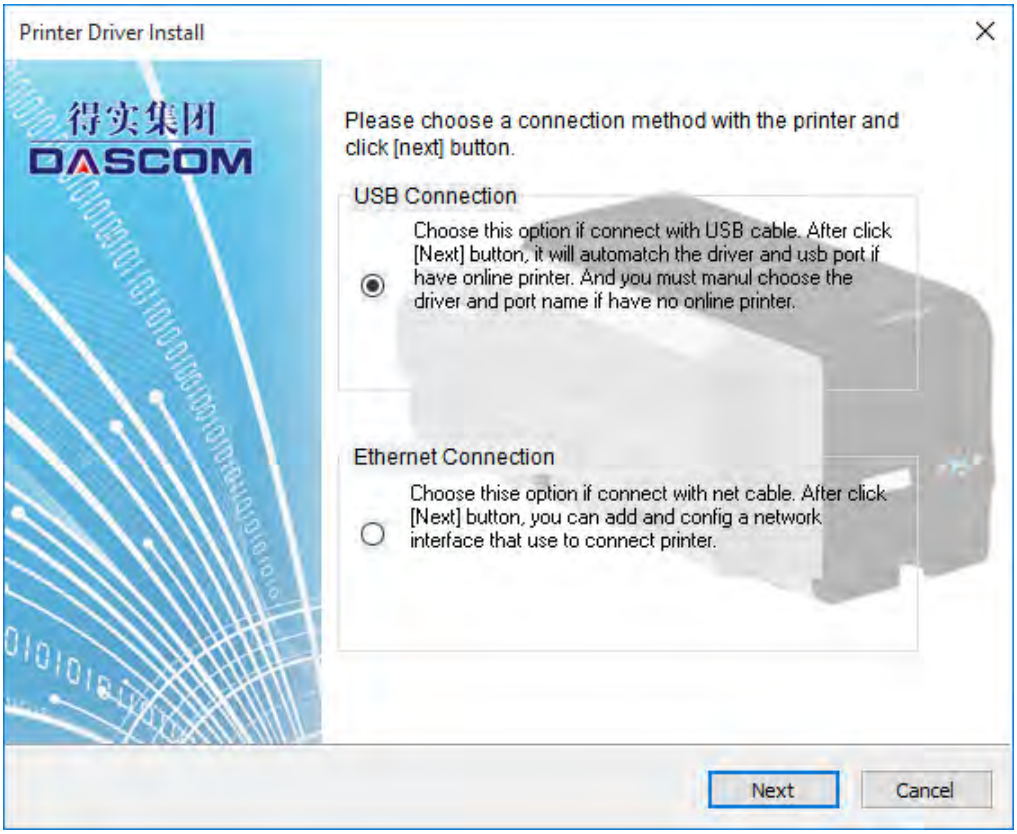

（2） Select the Driver Selection and appropriate Port Selection, click “Next”.

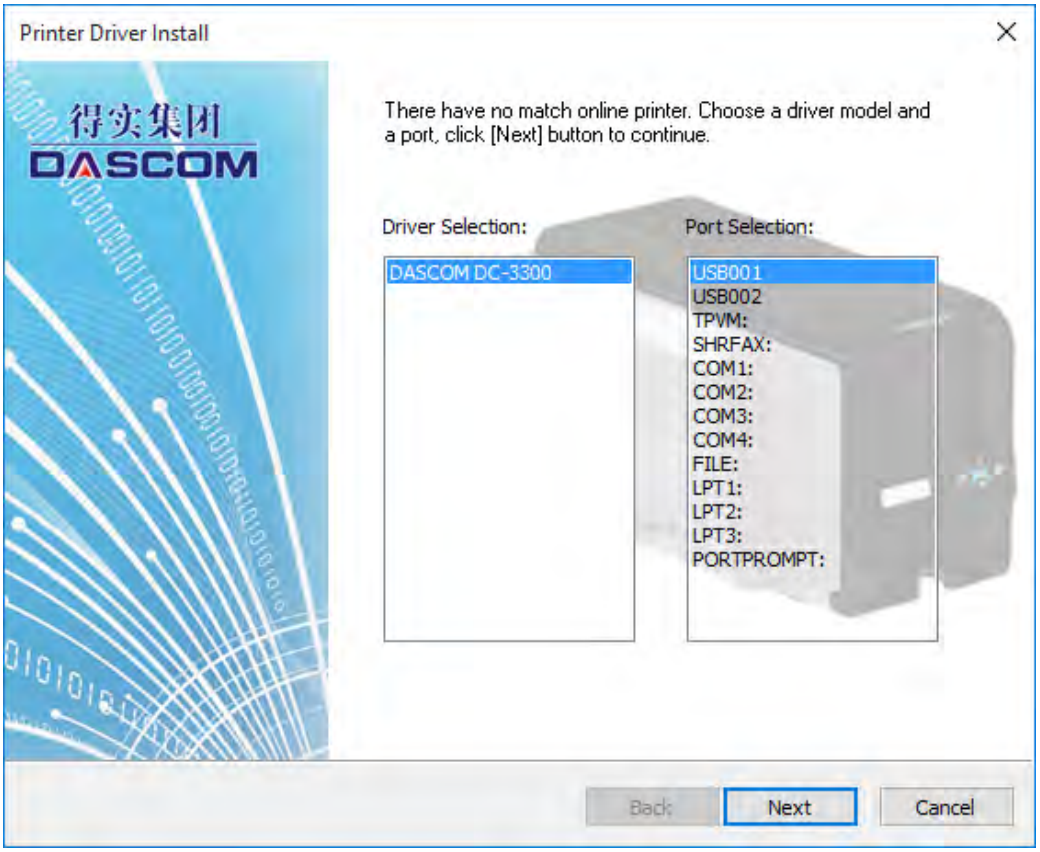

（3） Set up the printer name or go with the default, click “Start” to begin the process.

（4） Waiting for the installation.

（5） When the Driver has been successfully installed, click the “Finish” button.

1.7.2 Installing Windows Driver via Ethernet

Connect the Ethernet cord from the Printer to an available port on a Ethernet Switch or Router. Turn On the Printer, put the CD-ROM into the computer and choose the Drivers Install program.

The Install program will guide you through the necessary steps to finish the whole installation.

	Ensure the printer and the computer are on the same LAN before installation. Switch on the printer. Please follow the installer carefully. Some Windows versions require users to have administrator privileges to install the driver.

（1） Select Ethernet connection. Click “Next”.

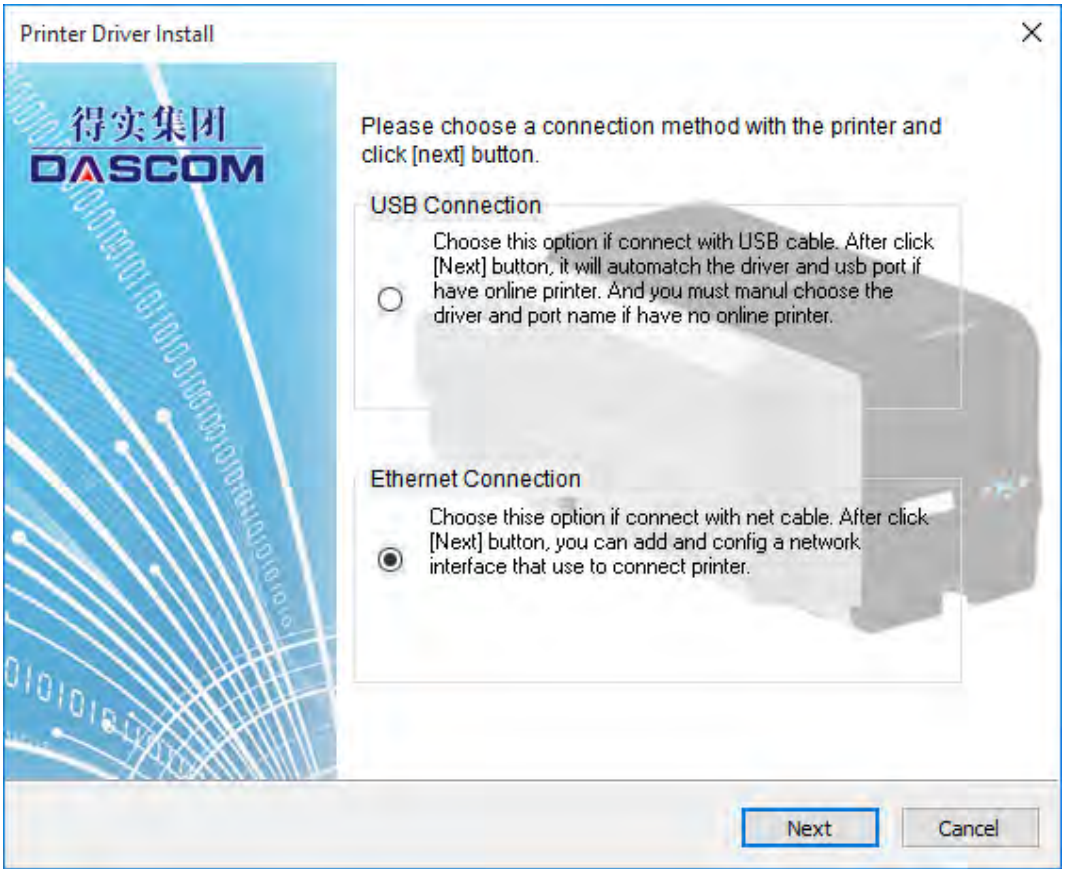

（2） To search for the network attached Printer, click “Search” button.

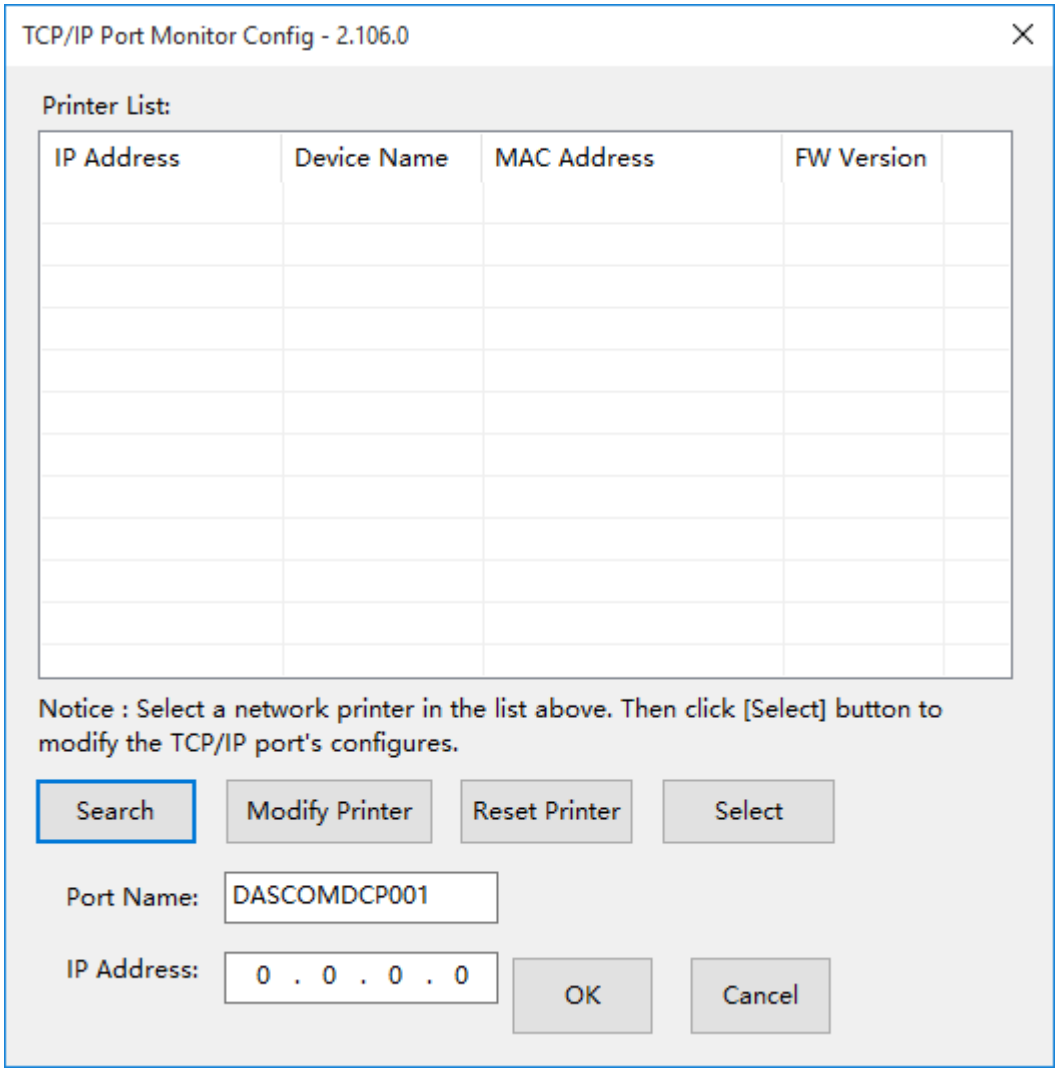

（3） Select your printer by clicking on it, then click on the “Modify Printer” button.

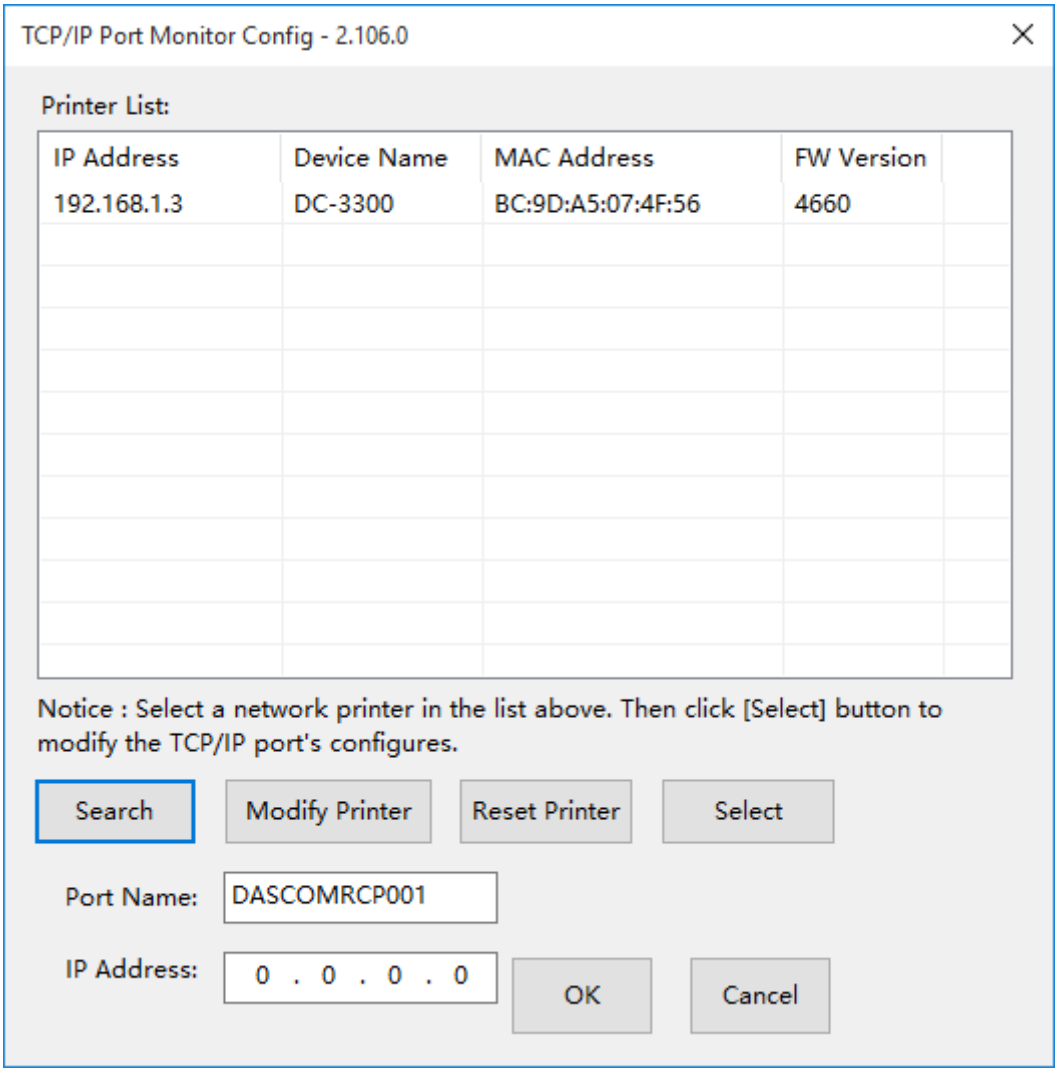

（4） You can modify the Printer name, IP address acquisition mode， IP address, Subnet mask. Click the “OK” when you finish.

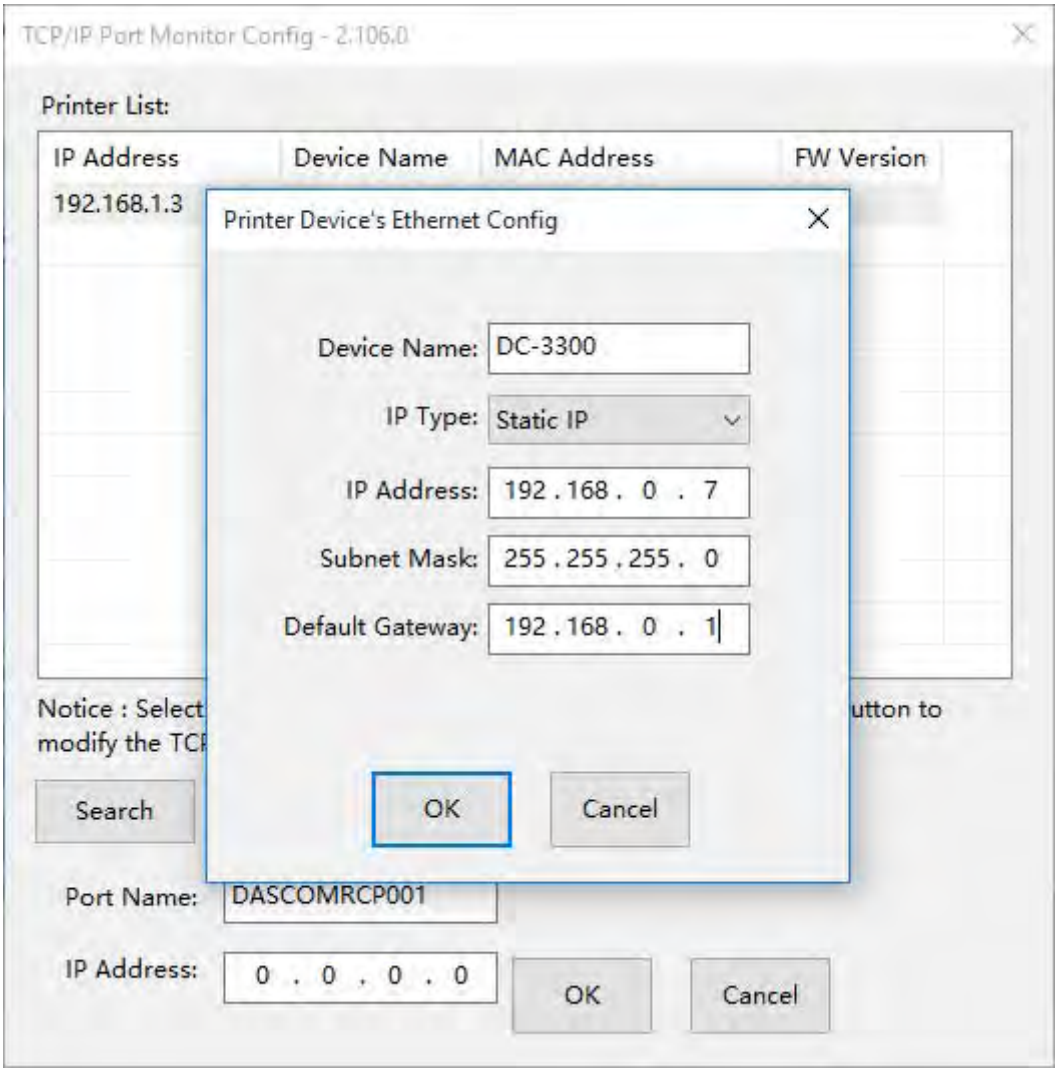

（5） Return to the Ethernet port configuration page, wait for a few seconds, you can see the updated Ethernet information.

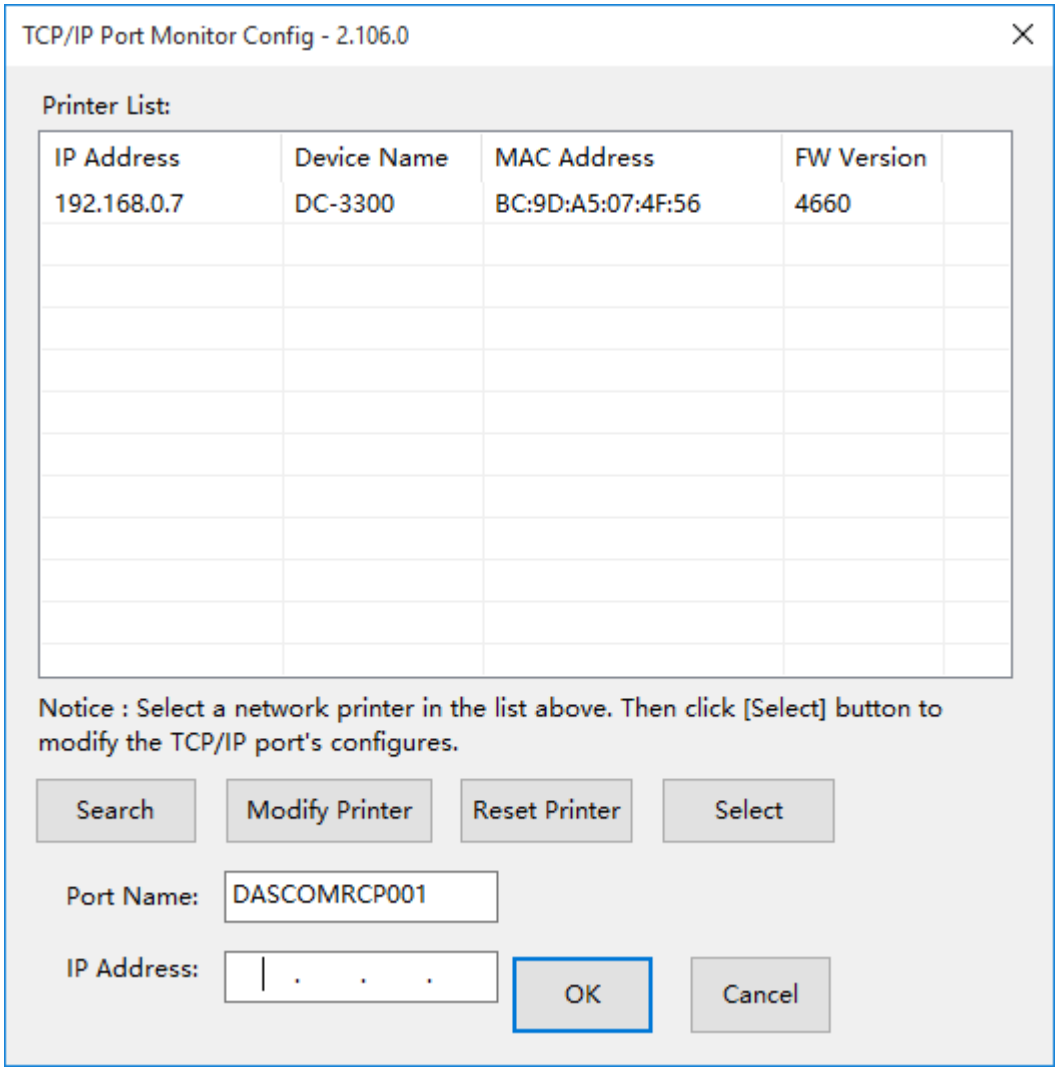

（6） Select your printer, click “Select”. The corresponding IP address information is displayed at the bottom left. The installation will start when you click on “OK”.

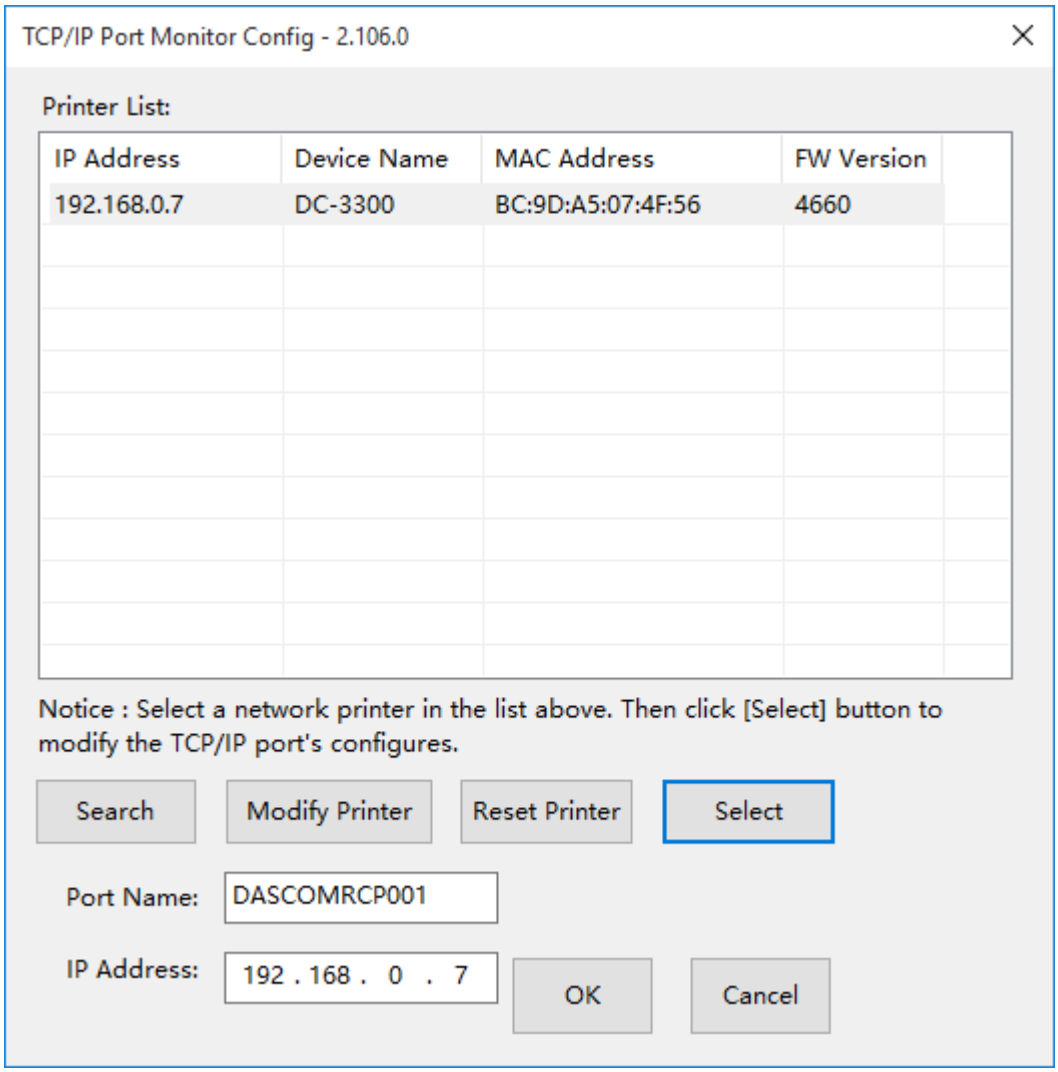

（7） Select the Driver Selection and appropriate Port Selection, click “Next”.

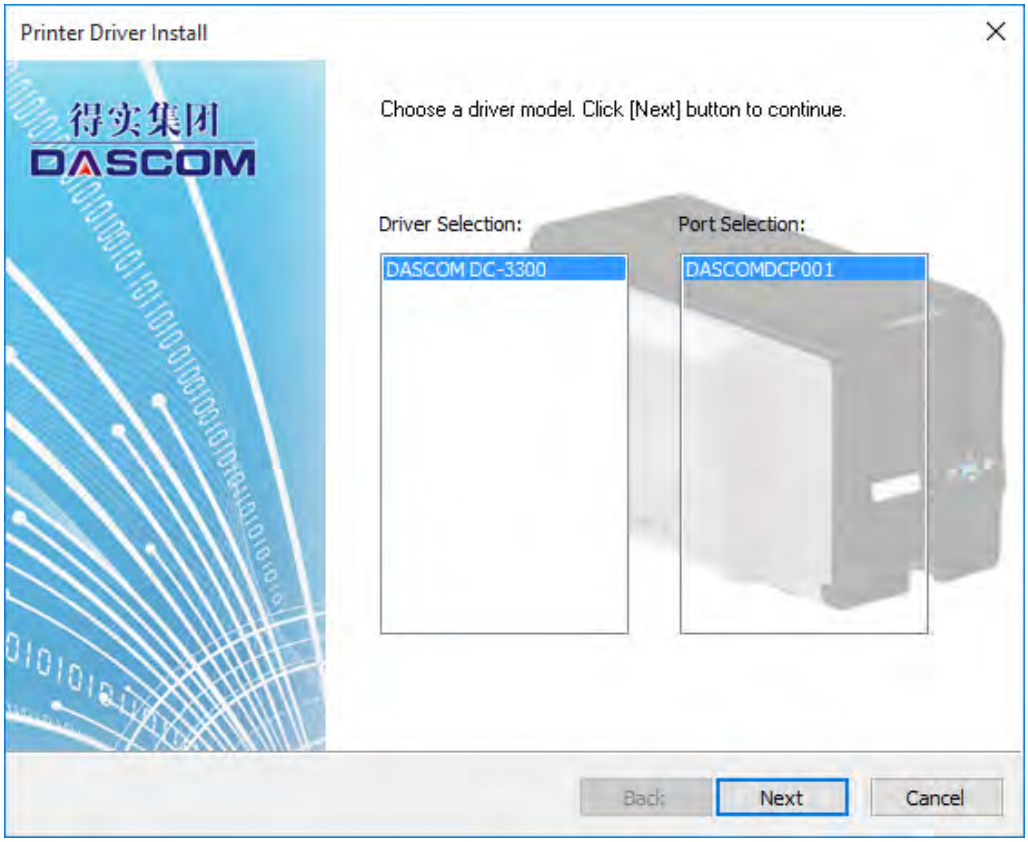

（8） Set up the printer name or go with the default, click “Start” to begin the process.

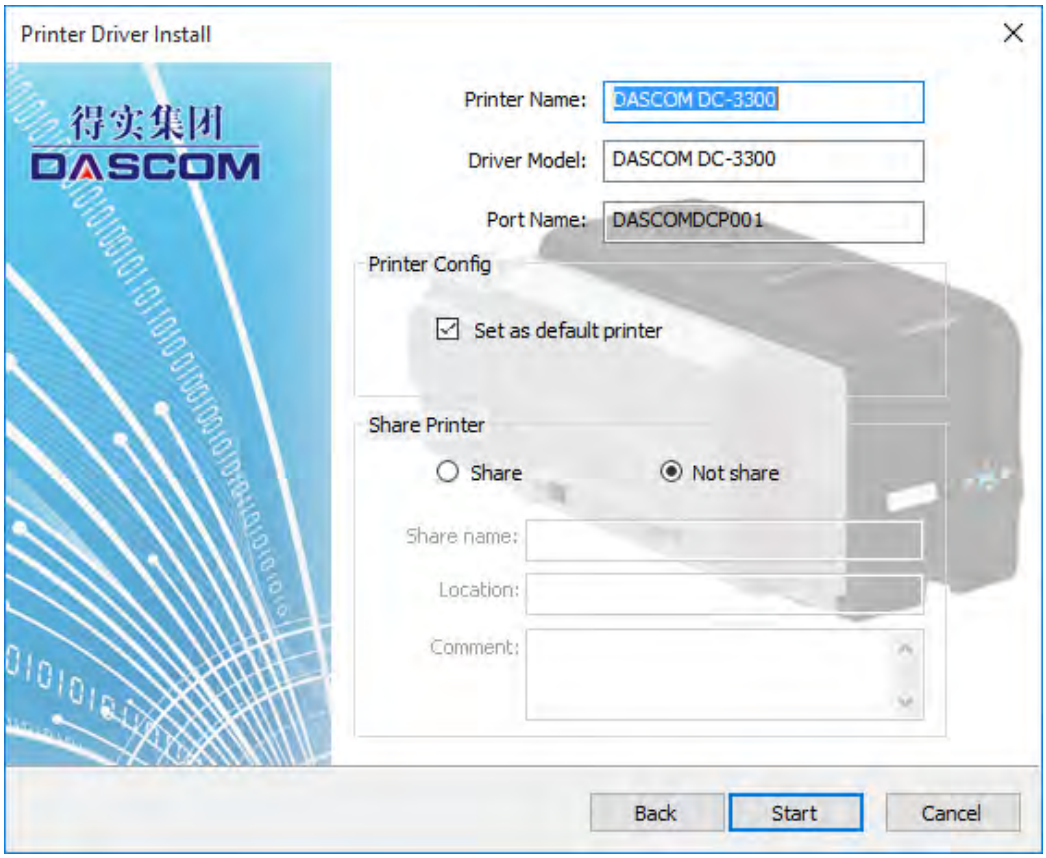

（9） Waiting for the installation.

（10） When the driver has been successfully installed, click the “Finish” button.

CHAPTER 2 INSTALLATION

2.1 Installing Cards

Cards can be loaded automatically from the card cassette, which can hold a large quantity of cards making it convenient for mass or large-scale printing.

2.1.1 Card Specifications

This printer supports CR-80 cards.

Dimensions: 85.6mm × 54mm

Thickness: 0.25mm ~ 1.25mm

Types: blank card, magnetic stripe card, contact smart card, contactless smart card, and pre-printed card.

- Non CR-80 cards may cause defective print results or become stuck or lodged in the printer requiring service.
- Do not use the cards listed below:
  - Previously printed cards by other card printers
  - Damp cards
  - Cards containing foreign particles, such as glass or metal
  - Embossed cards
  - Cards contaminated with oil, grease or dirt
  - Defective cards with damages ,cracks, broken corners, or bends
  - Transparent Cards
  - Cards with odd shapes that are not CR80 size

2.1.2 Loading the cards

（1）Open the front cover.

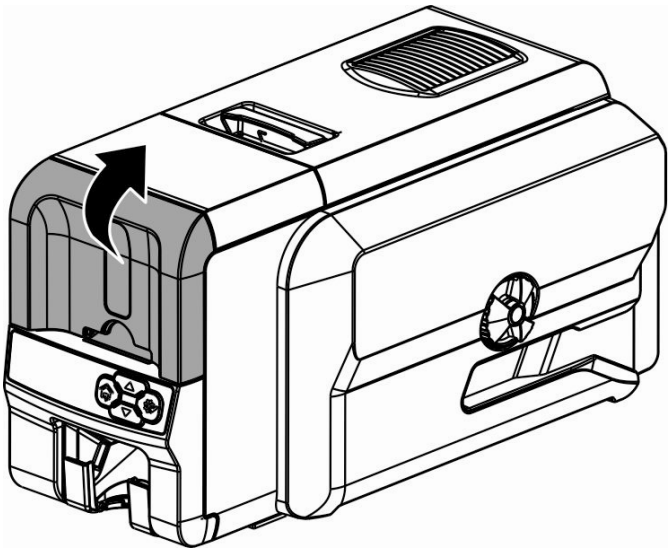

（2）Load the cards to the Card cassette. Max. 100 pieces of 0.76mm thickness cards can be stored.

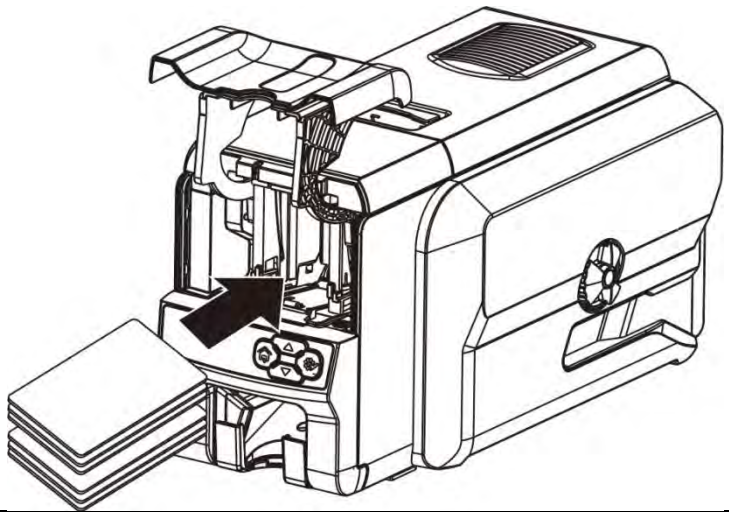

Please load the cards carefully. Ensure that magnetic stripe CARDS and contact smart CARDS are properly placed in the card feeder. If the card is inserted in the wrong direction, the code selection may not work properly.

2.1.3 Adjusting the card inlet according to the thickness of the cards

The factory default supports 0.76mm (30mil) card thickness. Confirm the correct thickness setting before installing new cards to the card cassette. The printer configures with 0.25mm(10mil)~ 0.76mm(30mil) and 0.76mm(30mil)~ 1.25mm (50mil) , 2 levels. Set the lever to the correct position.

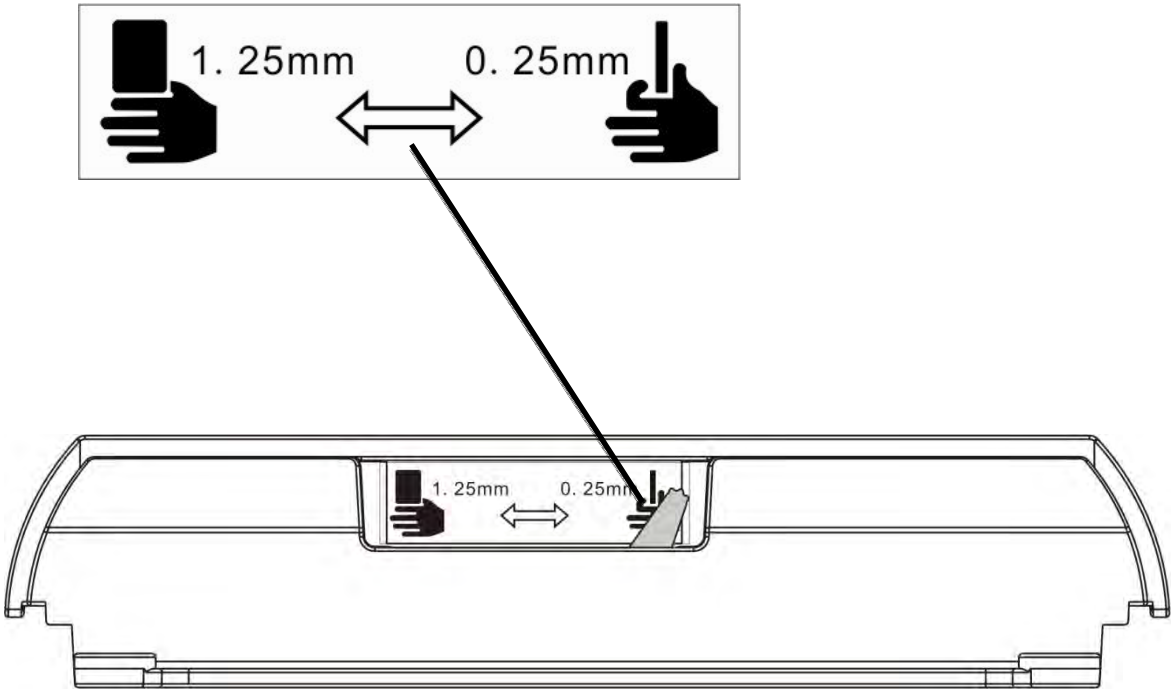

2.1.4 Managing Rejected Cards

Using duplex option, this printer is equipped with front and rear slots to separate correctly printed cards from rejected ones. By default, rejected cards are ejected from the rear slot. However, the two slots are interchangeable for your preference.

Follow the below procedures to assign the location of the Reject Slot:

① Refer Section 3.2 to change from **Normal Mode** to **User Mode**.
② Press the ▼ **Key** until [Card Setup] is displayed. Press the **SET Key**.
③ Press the ▼/▲ **Key** until [**Std card exit**]/[**Error card exit**] is displayed. Press the **SET Key**.
④ Press the ▼/▲ **Key** to select the proper reject slot. Press the **SET Key.**

> By factory defaults, the printer outputs correctly printed cards and rejected ones to the front and rear slots, respectively. If configured with duplex option, the rejected cards are ejected from rear slot by default, while without duplex option, the rejected cards are ejected from front slot by default.

2.2 Replacing the Ribbon

Change the ribbon when the LCD prompts **[RIBBON END]** message.

Approved ribbons for this printer:

Type	Description	Product Code
YMCK ribbon	/	/
YMCKK ribbon	/	/
YMCKO ribbon	yellow, magenta, cyan, black, transparent	PN: 27056003 (DUS) 27056004 (DEU) 27056005 (DAP)
YMCKOK ribbon	/	/
K ribbon	black	PN: 27056006 (DUS) 27056007 (DEU) 27056008 (DAP)

Please contact your local reseller for ribbons not listed above.

- Direct touching contaminates the **ribbon** and causes uneven print quality.
- Avoid excessive impact on the ribbon when replacing them.
- Using non-genuine products may cause poor print quality and printer malfunction.
- Quality and reliability of the non-genuine products are not guaranteed.
- Even within the warranty period, fees may be charged on servicing the printer using non-genuine products.

You can get the unused quantity of ribbon.
Refer Section 3.3 to get the unused amount of your ribbon.

Via the LCD Panel or through the Printers Driver, an estimation of the remaining Ribbon quantity can be viewed if it is sufficient for your current print job. The LCD displays the [RIBBON END] warning when ribbon is close to running out.

Consume the ribbon as soon as possible after purchase.

（1）Lift the cover open lever to open the top cover.

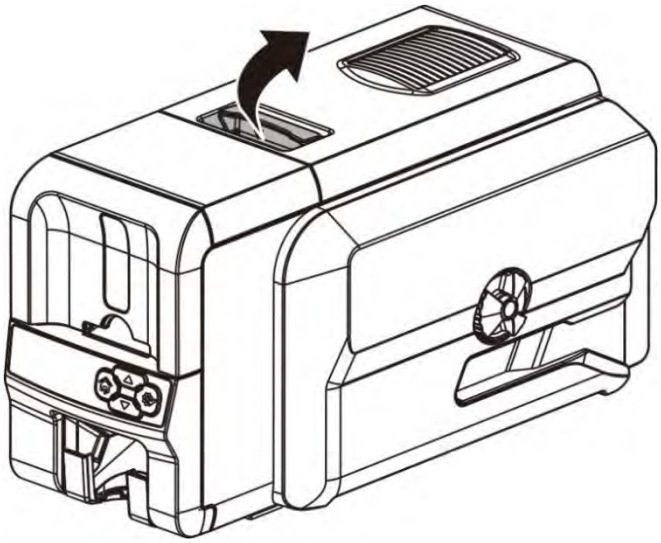

（2）Place the ribbon vertically into the ribbon cartridge slot (the new ribbon spindle into the front ribbon cartridge slot, and the empty ribbon spindle into the rear ribbon cartridge slot). Tighten the ribbon, and close the top cover to its original position.

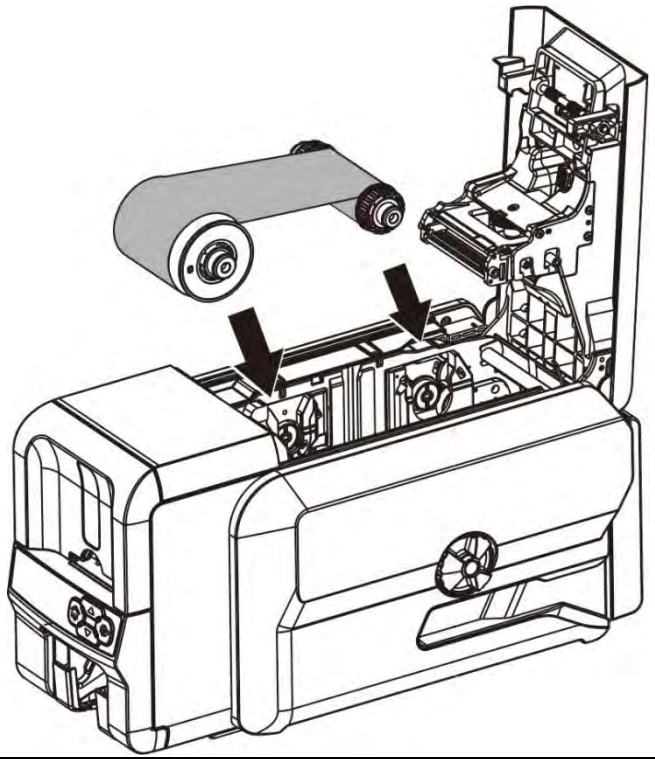

（1）When the ribbon roller is mounted to the cartridge base, push it down to the bottom with a little force.
（2）After installation, the ribbon film should be slightly tightened, without any no skew.

2.3 Replacing the Cleaning Roller

One **Cleaning Roller** is shipped with each **Ribbon** in a package.

IMPORTANT: Replace cleaning roller each time you change the ribbon, to guarantee the print quality and protect the print head.

（1）Lift the cover open lever to open the top cover.	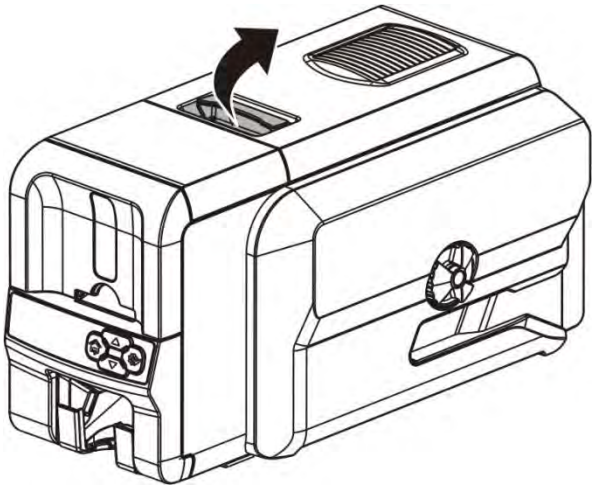
（2）Tear off the protective film on the cleaning roller.	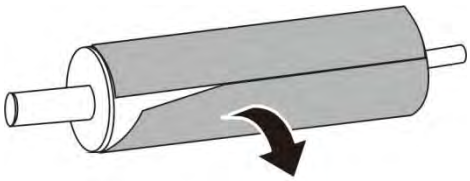
（3）Place the big end of the cleaning roller to the left (when facing the printer), while the small end to the right, and put it vertically into the slot, in front of the ribbon cartridge slot.	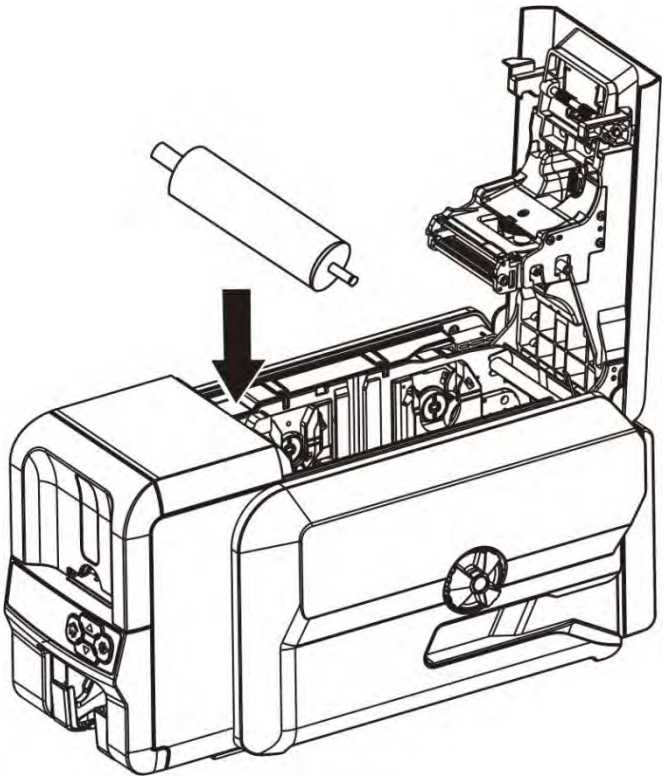

2.4 Printing card

All kinds of Windows applications have document printing capabilities (such as Microsoft Office suite MS-Word, MS-Access, MS-Excel, MS-PowerPoint, and the DASCOM self-designed card editing software CardEditor).

To understand the card layout, its format and print configuration, you are advised to refer to the following example.

Dascom Software Card Editor is used to support DASCOM card printers. Users can quickly generate and edit content that needs to be printed.

(1) Double click on “Card Editor” icon to start the program.

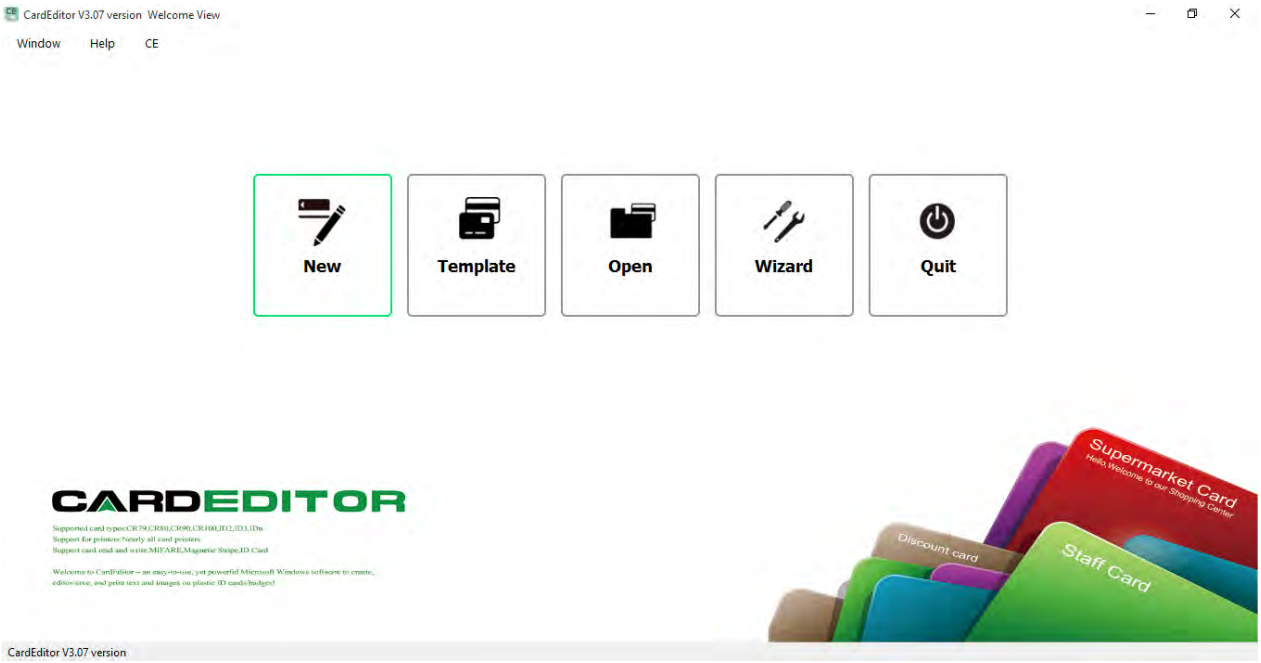

On the Card Editor Home Page, you will see 5 buttons:

Click above buttons separately can control different function:
Button 1: **New**, user can create a new card.
Button 2: **Template**, user can choose a suitable card template, then edit and modify it.
Button 3: **Open**, user can open the card file which filename extension is CE.
Button 4: **Wizard**, user can add black ground, images, barcode and text when creating a new card.
Button 5: **Quit**, click this button to quit CARDEDITOR.

View the Card Editor User Manual for a complete understanding of features available in Card Editor.

(2) After click “new” button, user can choose the card type he/she wants. Select “CR80” in “card type” and select “Landscape” or “Portrait” depending on the card direction. Then click “OK”.

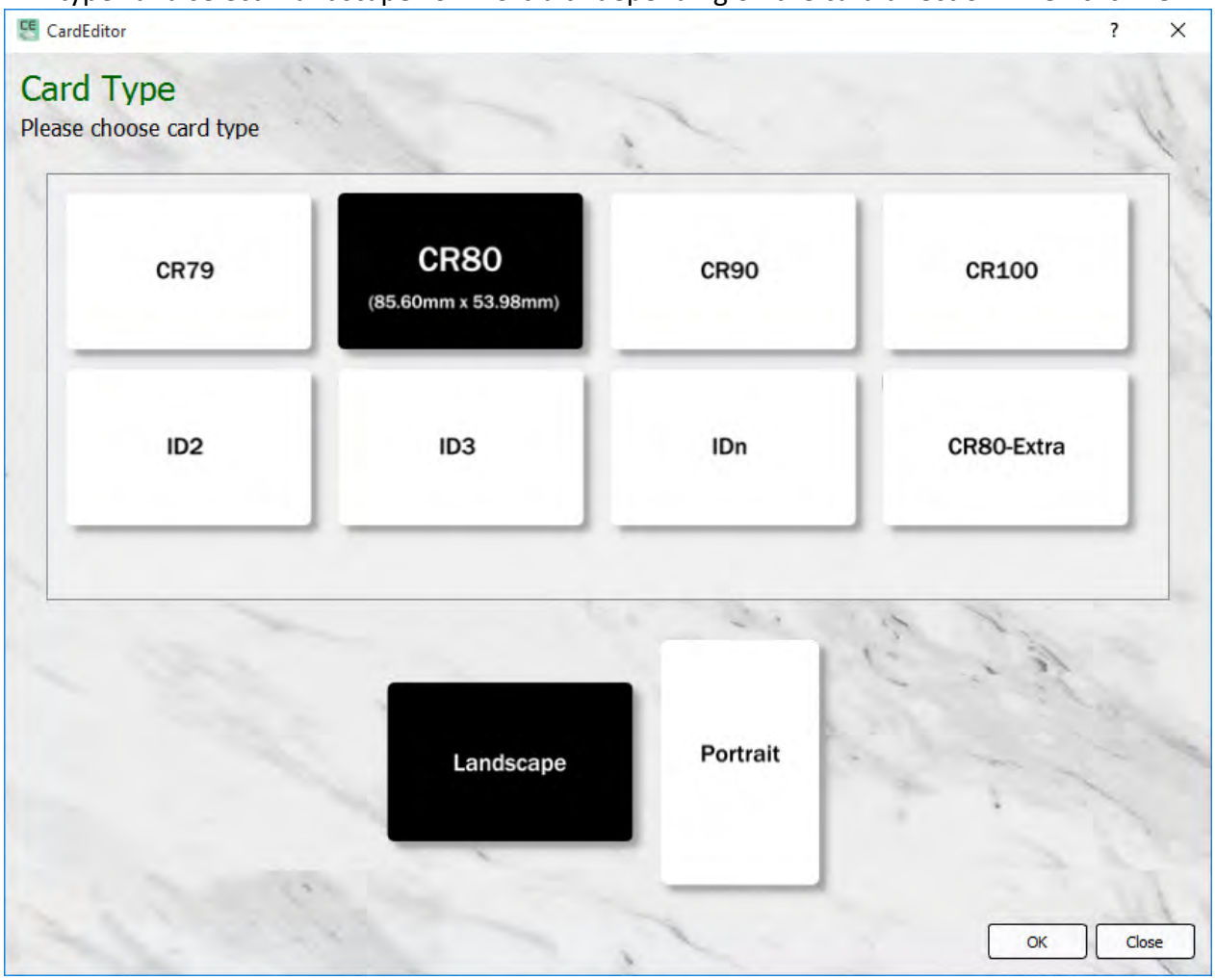

(3) Click “Template” on the right side of the user interface, then user can see many default templates as follow:

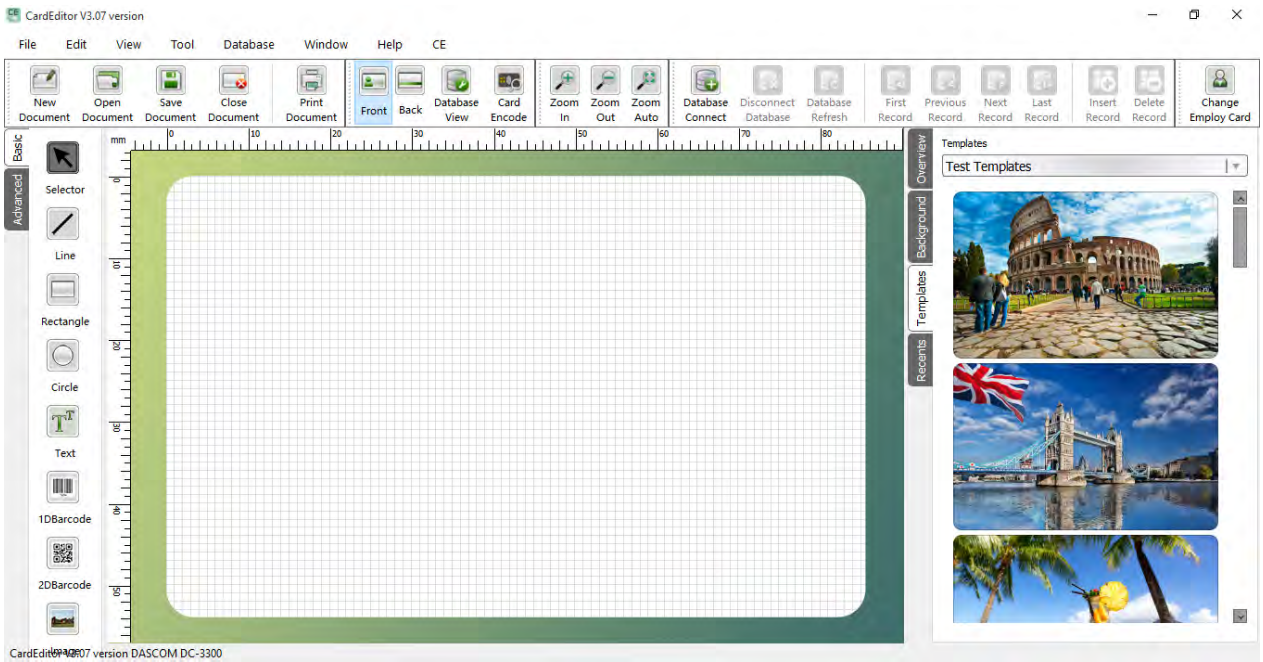

(4) Double clicks the model you want to edit, when you finish click the “print” on the “file” menu.

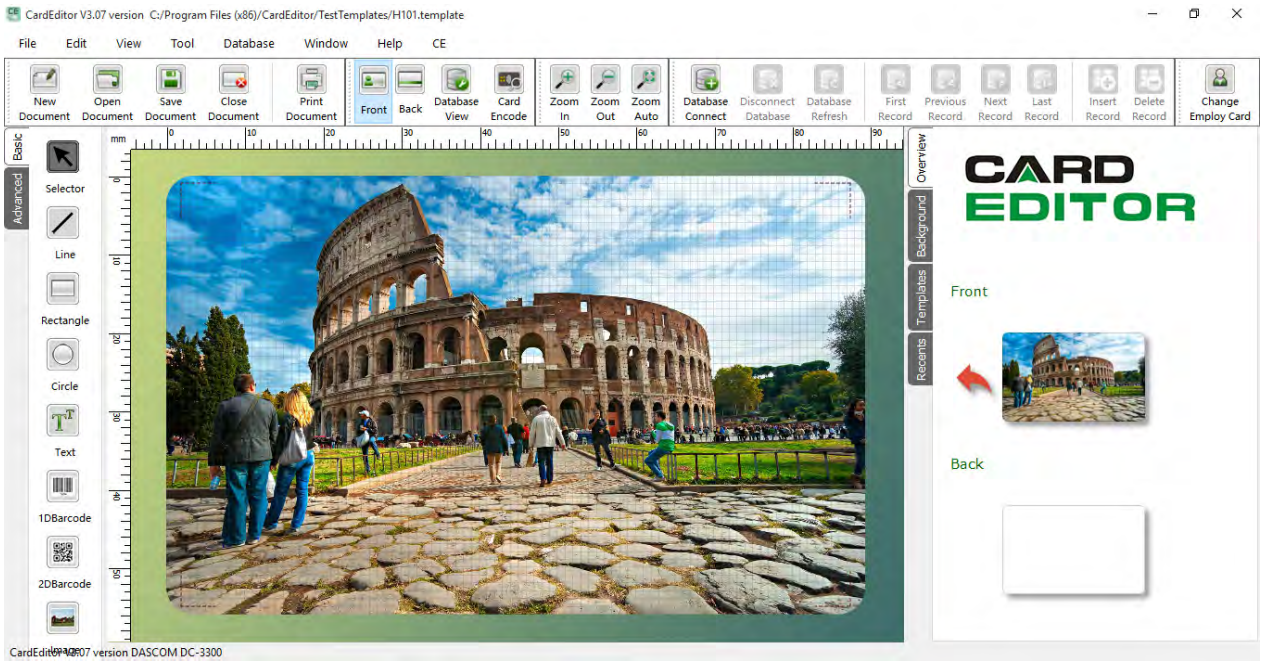

(5) You can print the card directly by clicking on the Print button.

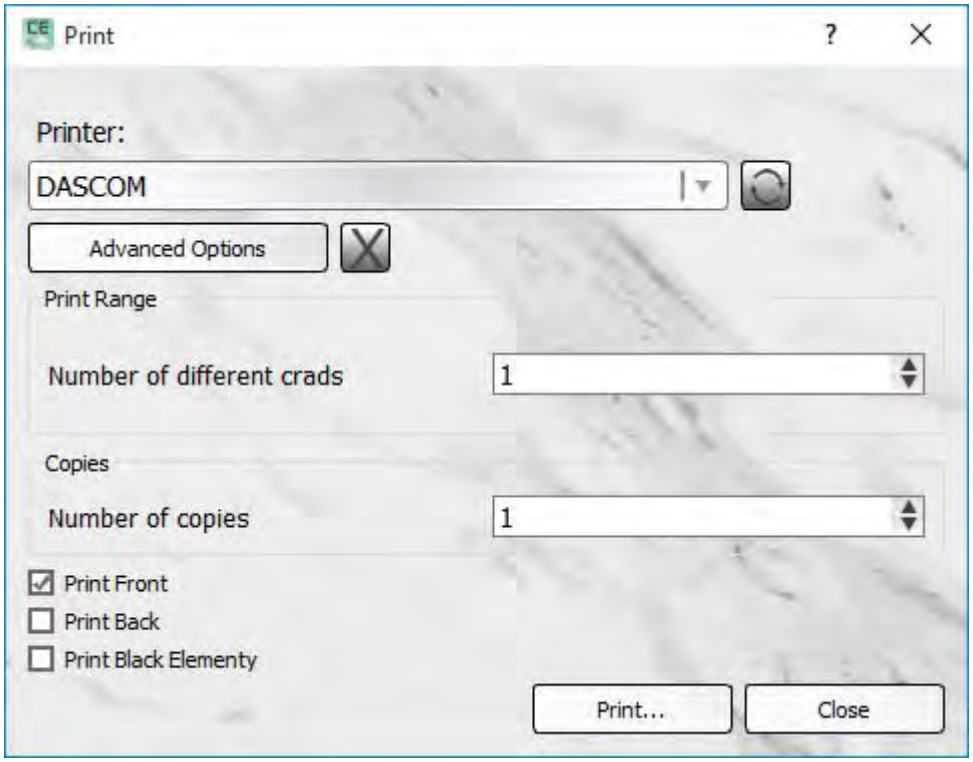

(6) If you want to modify the driver settings, such as card direction, single side or double-sided printing, card modification or processing, you can click "Advanced Option" to change the driver. As for popup print Settings, and then click "ok" to save Settings. Then click "print".

The main selections of the Printer Driver are “Card”, ”Graphic setting”, ”Graphic setting(reverse side)”, “Printer Mode”, “Print Area”, “O layer Setting” and “Maintenance”.

“Card” Tab

- Card Size
- Print Quantity
- Automatic Ribbon Detection
- Print Side (User can choose front/ reverse side to print. Printer can print the image on the card reverse side and can also split the different color of the ribbon.)
- Card Orientation (Portrait or Landscape)
- Rotation (Rotate 180° printing on the front/reverse side)

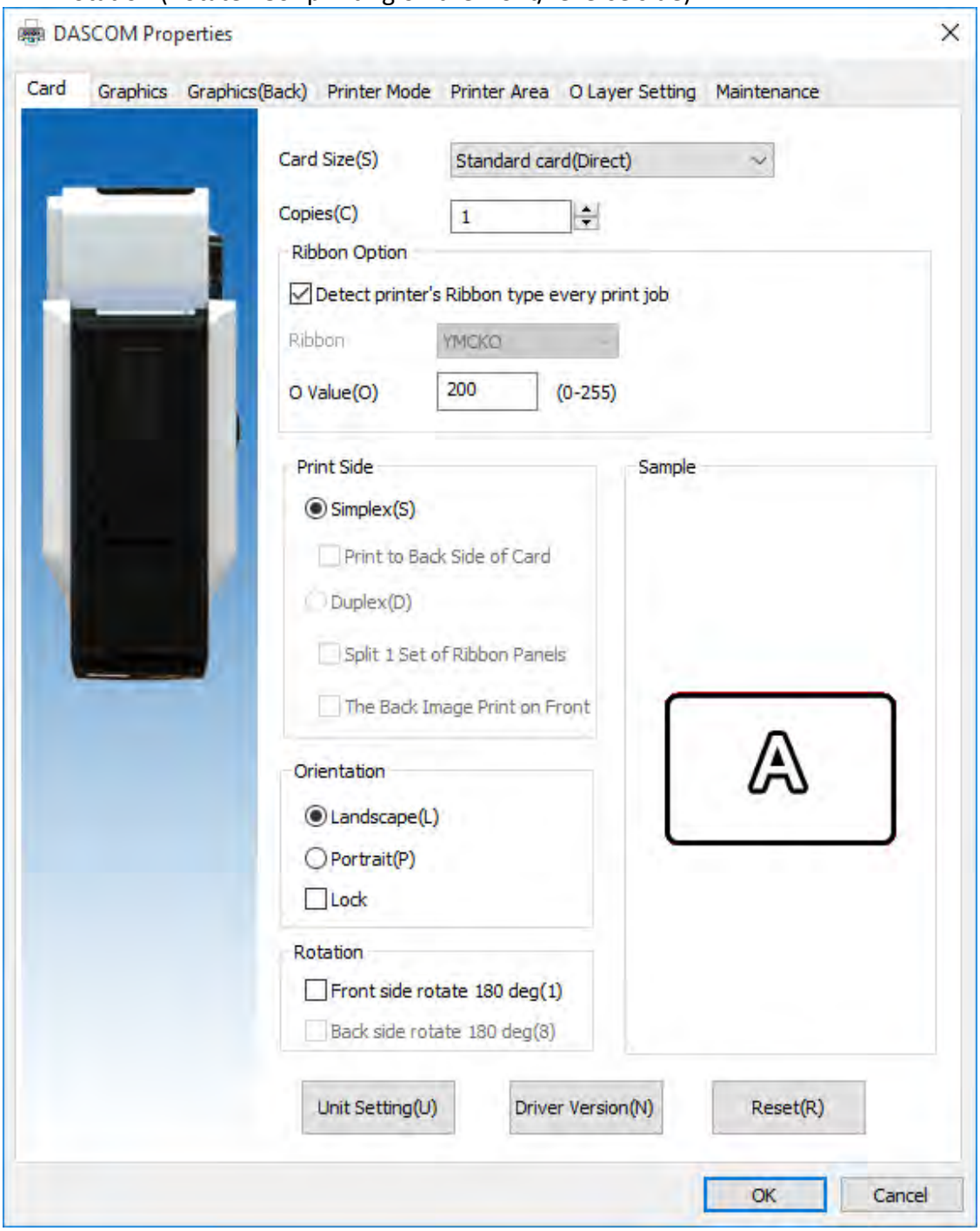

"Graphics" Tab

- Color settings (User can get the proper color via settings. User can also adjust the color brightness, contrast and chroma.)
- Black settings (User can print black via print K color or YMC secondary colors and K color. As well as, user can choose monochrome printing, color printing, set the black valid area and the black invalid area.)

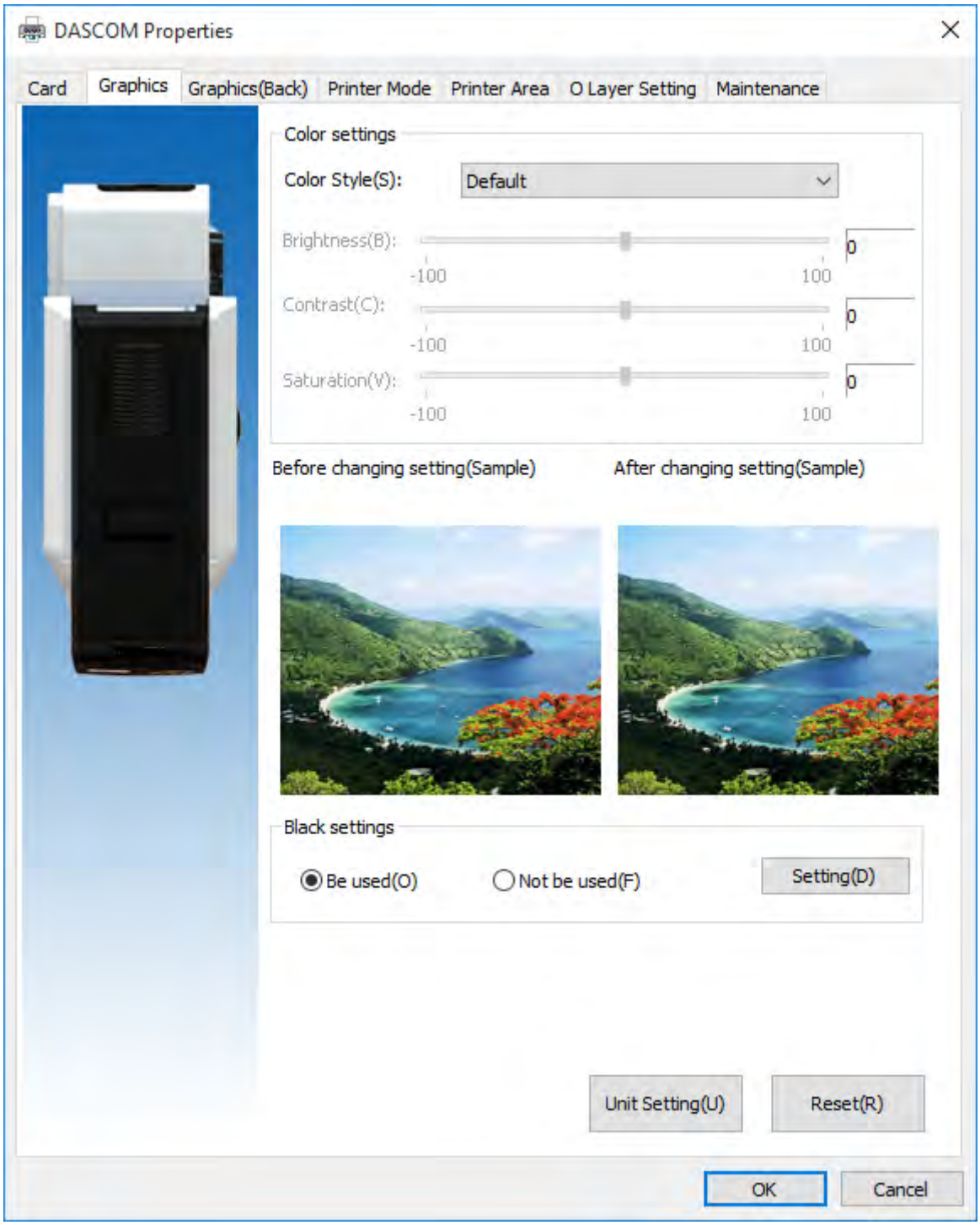

“Graphics (Back)” Tab

- Color settings (User can get the proper color via settings. User can also adjust the color brightness, contrast and chroma.)
- Black settings (User can print black via print K color or YMC secondary colors and K color. As well as, user can choose monochrome printing, color printing, set the black valid area and the black invalid area.)

“Print Mode” Tab

- Standard
- Best
- Custom

"Print Area" Tab

- Front Side Print Area
- Back Side Print Area

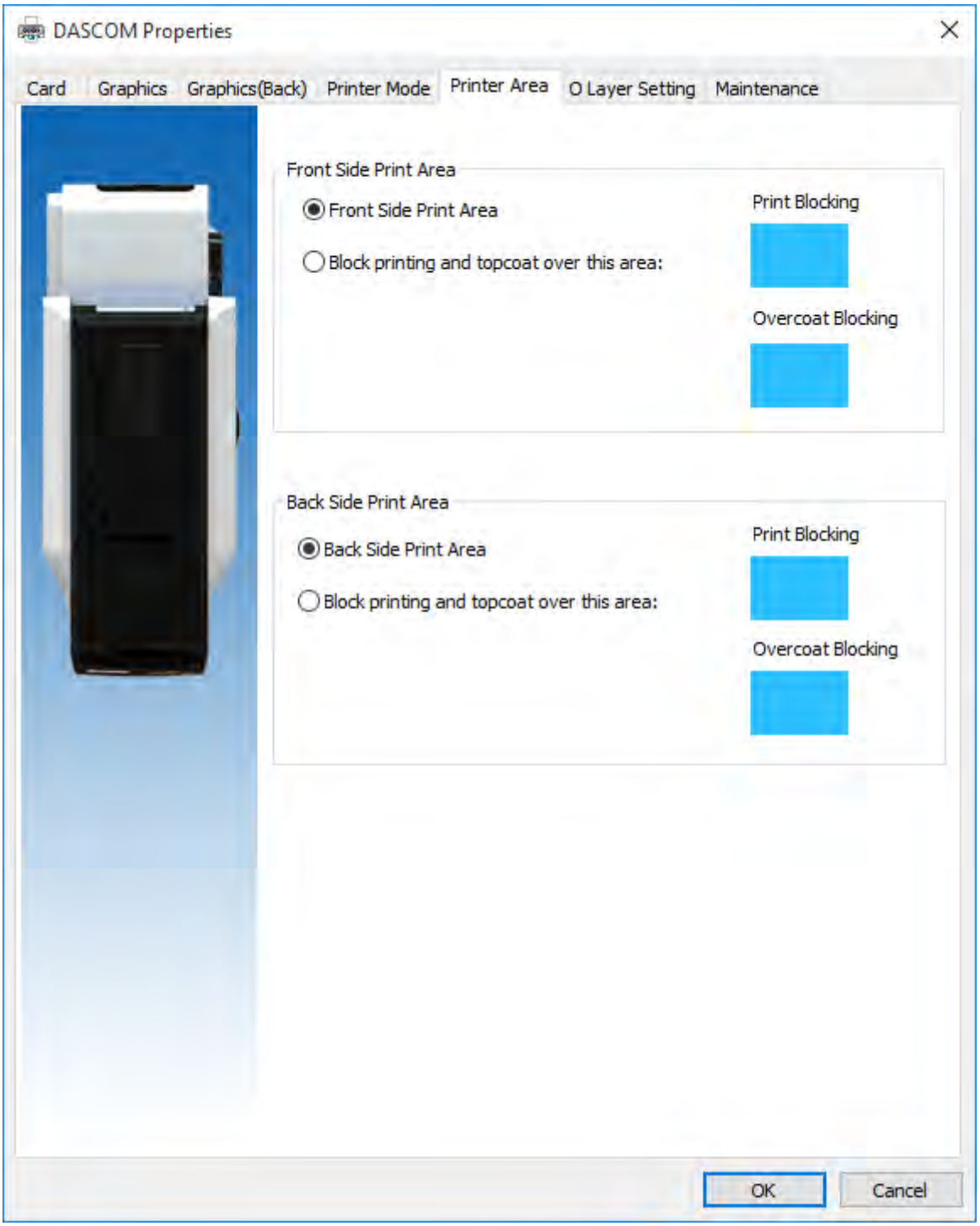

"O Layer setting" Tab

- O Layer area
- Printable area color
- O Layer File Path

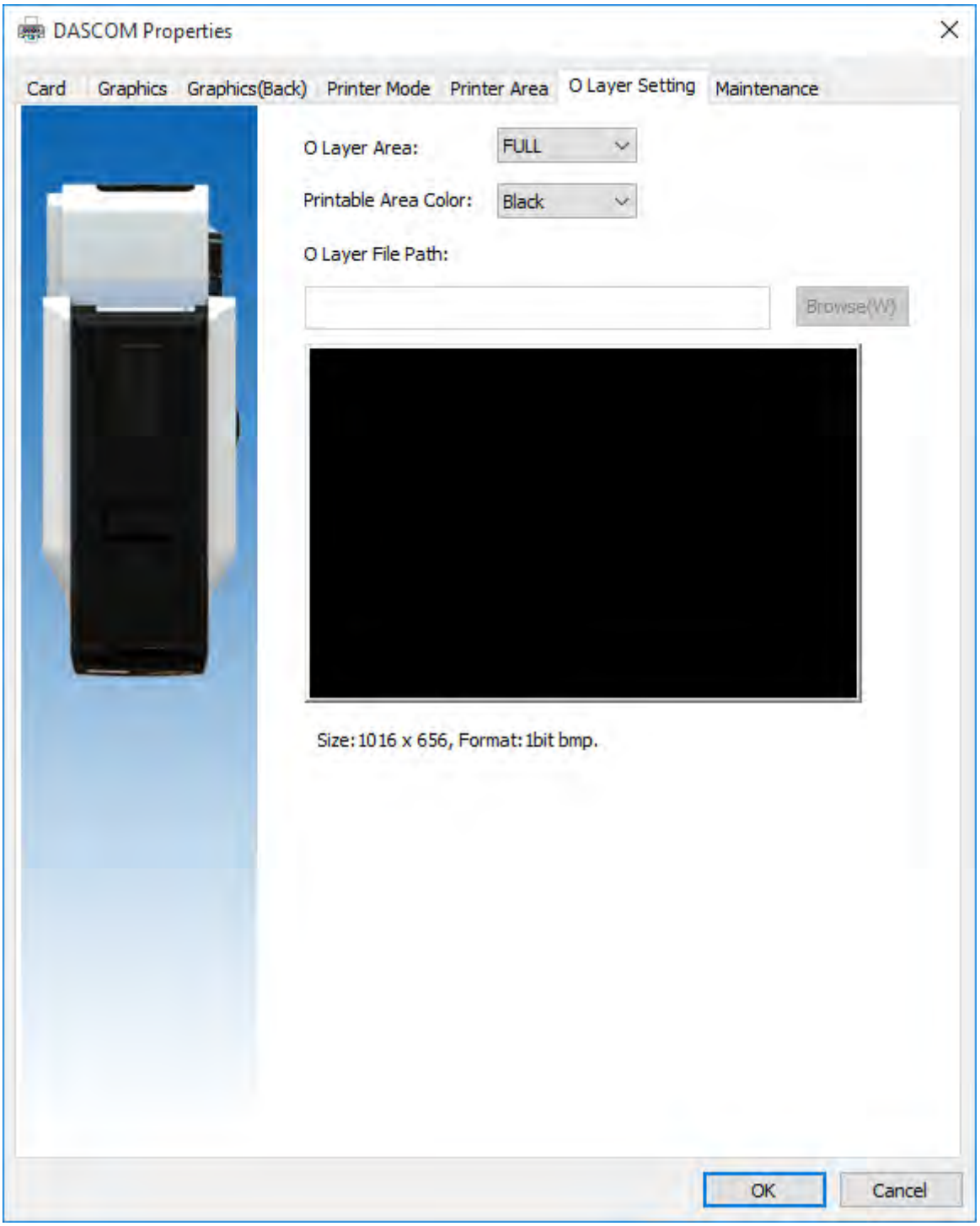

"Maintenance" Tab

- Printing test (Print the test content.)
- Printer information (User can check the printer DPI, the maximum printing area and minimum printing area.)
- Printer parameter setting (User can read the detailed printer parameter.)
- Enable Status Monitor (Decide whether to show the Printer Status Monitor or not during printing)
- Color Management (Processing optimization of Color can make the color more consistent with the color displayed by the software.)

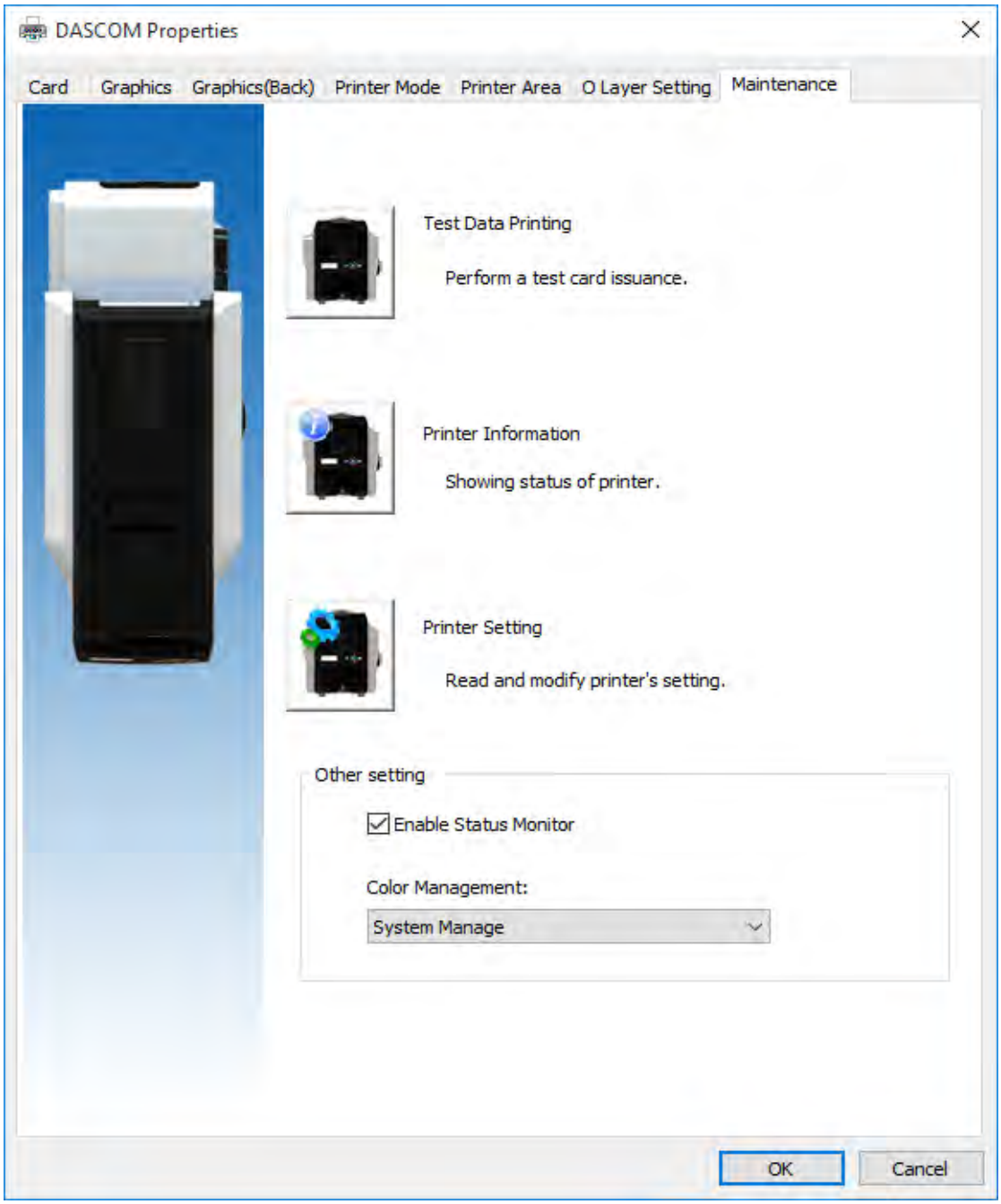

2.5 Updating Firmware

It's very easy to update the firmware, but if the installation of firmware is incorrect, the printer will be damaged.

Before updating, please contact DASCOM dealer for advice on the implementation of the upgrade. In general, updates are required only when a problem or failure is explicitly identified in DASCOM.

To download the update, please visit WWW.DASCOM.COM

The steps to update firmware:

(1) Select the control panel on the start key in the lower left corner of the Windows taskbar.
(2) Select the device and printer, then double clicks.
(3) Choose the printer property on the printer menu.
(4) Select the "tools" label and click the printer icon.

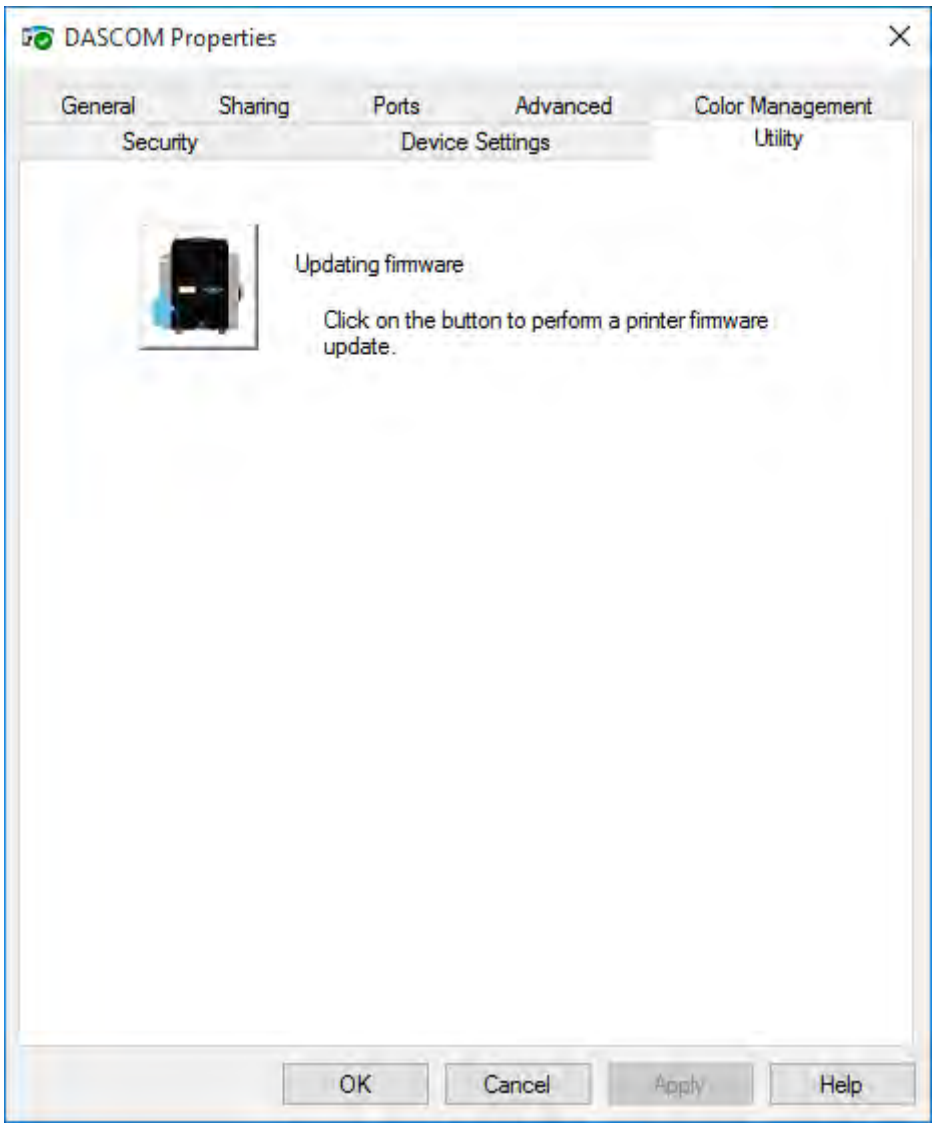

(5) Click the Browse icon, go to and choose the update firmware, choose which Update Mode then click the ”Update” button. When the update is finished, click “Exit”.

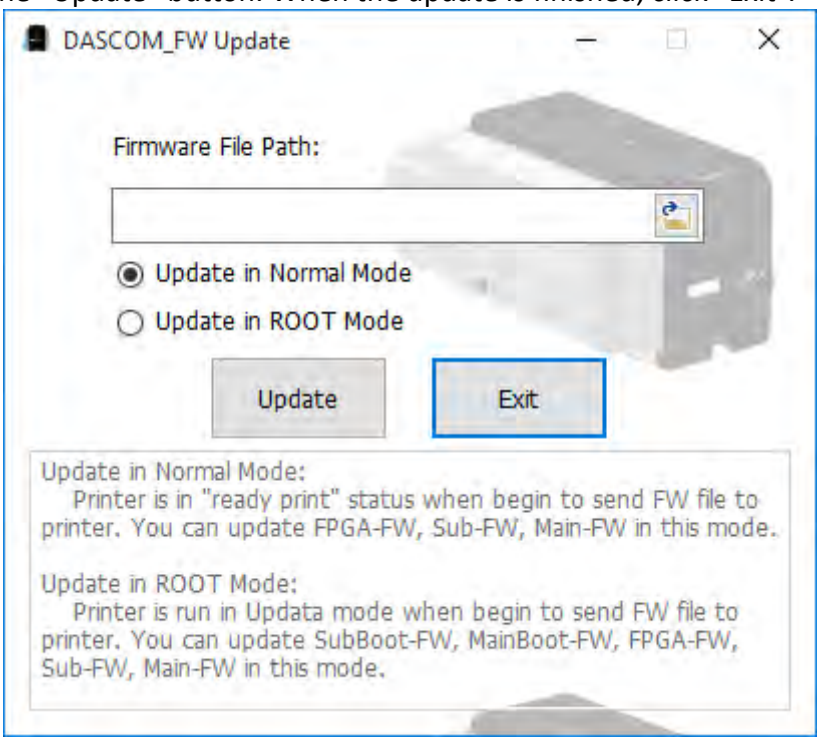

(6) After the upgrade, you can create the personalization card with this printer.

Do not interrupt the transmission between the computer to the printer during the download. (Such as switch off the printer or computer power, unplug the cable, etc.). Otherwise, printer might not restart. In case of such failure, please contact DASCOM dealer.

CHAPTER 3 NORMAL MODE AND USER MODE

You can change between **Normal** and **User Modes** when the printer is operating.

This section outlines the differences between these two modes and how to switch from one to the other.

3.1 Normal Mode

Normal mode: After start up, the printer goes into Normal Mode in which the printer can print cards.

In this mode, after you press the ▲**Key** for 1 second, the LCD displays the unused ribbon indicated by a series of "*"marks. Each "*"represents 20% remaining:

Ribbon Empty[*****]Full

In this mode, after you press the ▼**Key** for 1 second, the LCD displays the temperature of the **heater unit** and **print head:**

Heater Temp： 43℃
Print head Temp： 38℃

Normal Mode Message List:

Initialize	The printer undergoes system diagnostic and initialization. Cards remaining in printer from a previous irregular session will be ejected.
Ready	The printer is awaiting host requests or commands.
Printing	The printer is in a printing session.
Power Save Mode	The printer is in an energy saving state.

3.2 User Mode

User Mode allows changing the parameters and checking the status.

■ Steps to change from Normal Mode to User Mode:

1) After LCD displays **[READY]**, press **Menu/Exit Key** for 1 second then release it. The LCD changes its display to [**Printer Info**.], which is the entry menu in User Mode:

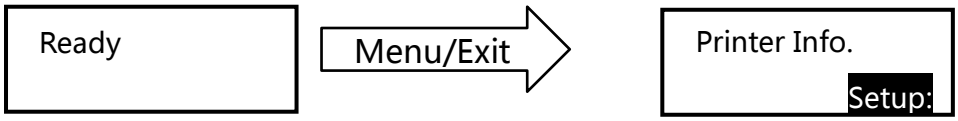

2) Press 【 Menu /Exit 】**Key** for 3 second then release it. The LCD shows [Choose mode]. Press ▲ or ▼ Keys to select **User Mode** or **Service Mode**:

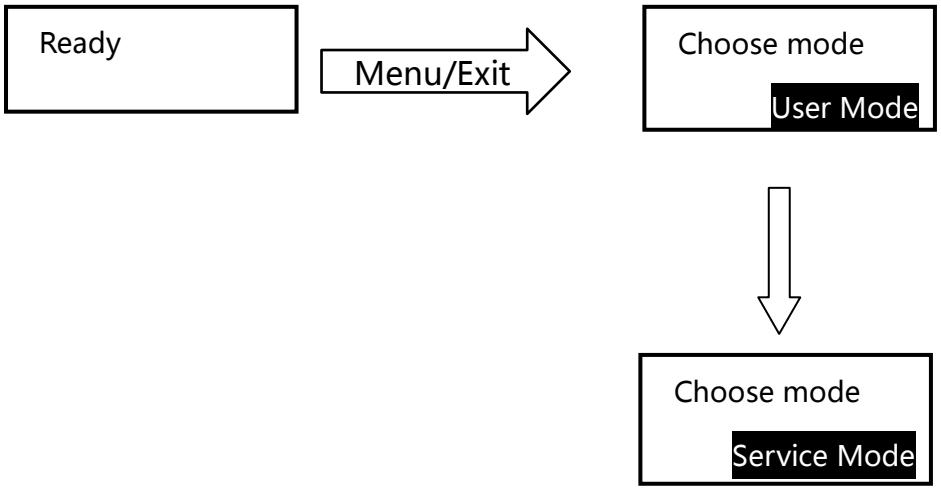

Even when the printer is in an error state, you can change modes.

■ Steps to return to Normal Mode from User Mode:

Continually press **Menu/Exit Key** until the LCD shows [Quit the Menu]. Then press **SET Key** to return to Normal Mode:

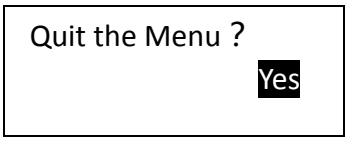

Function of four keys in User Mode:

- Menu/Exit Key: back to its parent menu, i.e. one level up in the menu hierarchy.
- ▲ Key: previous item.
- ▼ Key: next item.
- **SET Key**: an affirmative response to the second line in the LCD.

■ Moving between menus in the same level:

Section 3.3 lists out eleven menus in the same level, from **Printer Info**, **Version Info**, ... to **Reset User Default**. Consecutively pressing ▼/▲ **keys s**crolls through the various menus. It doesn't mater which arrow key is pressed since the menus loop around. But when the desired Menu is displayed, press the **SET** key.

For example:

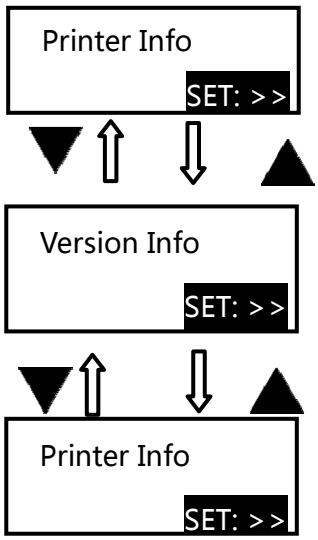

■ Entering a sub-menu (go down one level in the menu hierarchy)

Sections 3.3.1~3.3.11 are the sub-menus associated with the corresponding parent menus listed in Section 3.3.

When SET: >> appears on the second line of the menu, pressing **SET Key** enters available sub-menus or parameter values. Below, the right menu is the sub-menu of the left one.

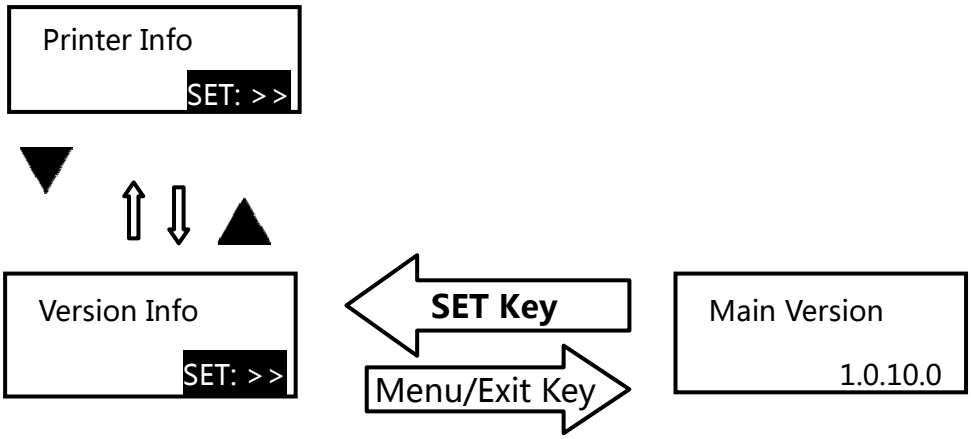

■ Consecutively press **Menu/Exit Key** until the LCD shows [Quit the Menu]. Then press **SET Key** to return to Normal Mode:

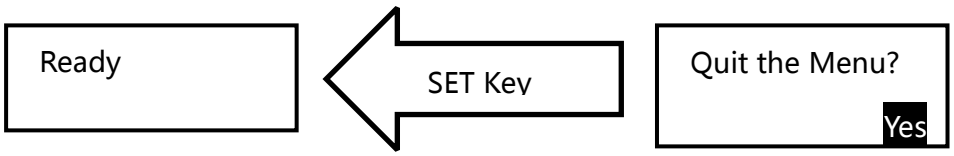

> **SET Key** must be pressed to save the newly changed value.
> Pressing **Menu/Exit Key** or switching off the printer will not save any newly changed value(s).

3.3 The major menus

- Printer Info
- Head Info
- Version Info
- Printer Setup
- Card Setup
- Ribbon Setup
- Image Setup
- Interface Setup
- Option
- Cleaning
- Reset User Default

3.3.1 Sub-menus for Printer Info

View the utilization history of this printer in each sub-menu:

- Card Count
- Print Count
- Ribbon Remainder
- Printer S/N
- Printer ID

> For quality assurance at the factory, it is necessary to run various print tests on the printer. A value of tens or more for Card Count is normal during manufacturing of your printer.

3.3.2 Sub-menus for Head Info

View the print head information in two sub-menus:

- Print Count
- Print head S/N

> Record the new print head serial number after replacement; otherwise, failure to do so affects print quality and voids the warranty for this print head.

3.3.3 Sub-menus for Version Info

View the latest version(s) in this printer:

- FW Version
- FPGA Version
- Boot Version

3.3.4 Sub-menus for Printer Setup

View and change operation parameters:

- Buzzer: OFF\ON
- Power Save Mode: OFF\ 5~120
- Language: Chinese\English\Japanese
- LCD Contrast: 128
- LCD Light: ON\OFF
- Card detection: OFF\ON (In "ready to print" state to detect whether card slot is empty)

3.3.5 Sub-menus for card setup

View and change card properties:

- Card type: PVC/PET/PET-G/PC
- Std card exit: FRONT SIDE\REAR SIDE
- Error card exit: FRONT SIDE\REAR SIDE

> If the printer is not configured with duplex option, the error cards are ejected from front slot by default.

3.3.6 Sub-menus for Ribbon Setup

View and change ribbon:

- Ribbon Type: YMCK / YMCKK / YMCKO / YMCKOK / BLACK
- Ribbon near end(%) (%) : 0~100

> When the unused amounts of ribbon reaches the values specified in Ribbon near end(%), the LCD displays warning messages: “Check Ribbon”.

3.3.7 Sub-menus for Image Setup

View and manage the color settings:

- Yellow Balance: ±64
- Magenta Balance: ±64
- Cyan Balance: ±64
- Black Balance: ±32
- OP Balance: ±64
- Color Brightness: light / dark / customer setting

3.3.8 Sub-menus for Interface Setup

View and change the interface settings:

- Printer ID: 0 - 15
- IP Type: Static / DHCP
- IP Address: 192.168.0.12
- Subnet Mask: 255.255.255.0
- Default Gateway: 192.168.0.1
- MAC Address: BC：9D：A5：07：4F：56
- Timeouts(s) : 10
- USB ID: OFF / ON

3.3.9 Sub-menus for Cleaning

Execute the cleaning process following instructions shown on the LCD display

3.3.10 Sub-menus for Option

- Magnetic Encoder
- IC R/W1
- IC R/W2
- duplex

3.3.11 Sub-menus for Reset Default

Reset Factory Default

CHATPER 4 CLEANING

4.1 Cleaning with a Cleaning Card

Use the Cleaning Card provided to clean the Card Transport Roller if cards do not feed smoothly.

We recommend cleaning the rollers after printing 250 cards.

	Cleaning Cards can only be used once and cannot be reused. Use a new Cleaning Card with the adhesive side down every time you clean the rollers. Do not touch the platen with hands.

（1） Switch from Normal Mode to User Mode. Press the 【▲】 or 【▼】 to find the [Cleaning].

（2） Press the SET Key, the second line displays “No”. Press the SET Key and press 【▼】 , the second line displays “Yes”, then press the SET Key. At the moment, the second line displays [Remove ribbon/sponge].

（3）Open the top cover to remove the ribbon, then close the cover. [Cleaning, Cleaning Card, Set Key] is displayed.

（4）Put the cleaning card in the card feeding slot, and press the SET Key to start cleaning.

（5）After cleaning, [Cleaning, Over, Put ribbon/sponge] is displayed.

（6）Open the top cover to put in the ribbon, then close the cover. [Cleaning, Menu Key, Exit] is displayed.

（7）Exit the User Mode, [Push Set Key] is displayed.

（8）When user presses the Set Key, the printer will be initialized. After initialization, the printer can continue printing.

4.2 Maintaining the print head

Use a clean cotton swab or a soft cloth to remove any foreign material accumulated on the print head, such as dust, sticky dirt, etc.

After long-term printing, it is particularly important to clean the printing head, which can guarantee the print quality and extend the service life of the printing head.

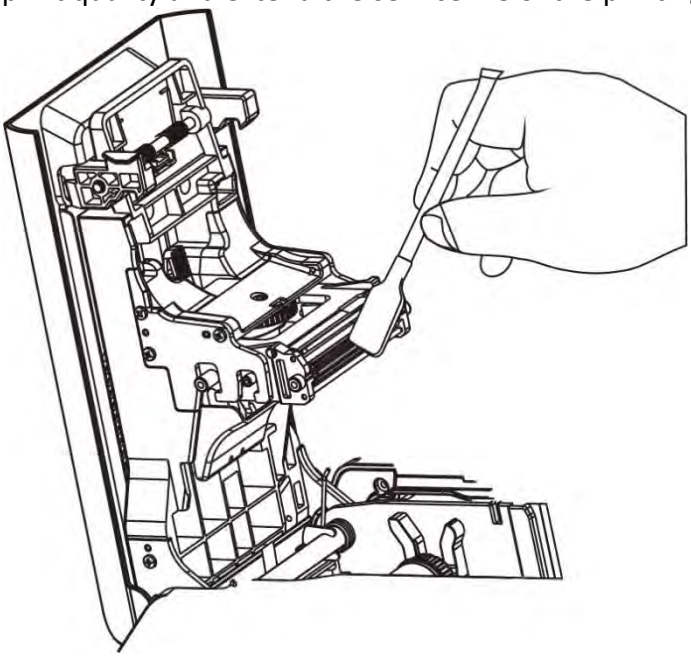

CHATPER 5 TROUBLESHOOTING

5.1 Warning Messages and Troubleshooting

This printer is designed for minimal user intervention. Occasionally, the LCD displays messages to advise users to take corrective actions.

After clearing an error, press SET Key to initialize the printer and [Ready] will be displayed.

- Warning/Error List

Display	Solution
Push Set Key	Push the **SET Key** once.
Feeder empty	Card cassette is empty. Refill cards to the feeder. Press **SET Key** to resume printing.
Cover Open	Close the front cover tightly.
Head heat high	When print head temperature is too high, the printer will stop printing until the temperature drops.
Temp Disorder	Ensure the printer is operating at the specified ambient temperature. Then restart the printer.
Check Ribbon	Cause: The unused ribbon reached the levels set in “Ribbon Near End”. Action: Beware if unused ribbon is sufficient for your print job.
No Ribbon	Do not turn off power. Refer to Section 2.2 to replace a new ribbon. Press **SET Key** to clear this warning and the printer resumes the previous printing after initialization.
Invalid Ribbon	Probable Cause: Unrecognized ribbon. Action: Do not turn off power. Refer to Section 2.2 to reload the ribbon if ribbon is skewed. Or, check if ribbon type is YMCK/YMCKK. Press **SET Key** to clear this warning and the printer will resume previous printing after initialization.
Ribbon Jam	Probable Cause: Ribbon winding problem. Action: Do not turn off power. Refer to Section 2.2 to reload the ribbon. Press **SET Key** to clear this warning and the printer will resume previous printing after initialization.
Feeder Card Jam	Pressing **SET Key** as LCD display shown may eject jammed card after initialization. If the fault is not cleared after lever, turn the rollers manually to clear jammed card.
Printer Card Jam	Do not turn off power. Open the front cover. Turn the rollers to clear jammed card. Close the front cover. Press **SET Key** to clear this warning and the printer will resume previous printing after initialization.

RFID_AUTH_ERROR	Check if genuine ribbon is used. Next, check if the ribbon has an RFID ring. Press **SET Key** as the LCD shown to initialize the printer.
Call Support	Check if genuine ribbon is used. Next, check if the ribbon has an RFID ring. Press **SET Key** as the LCD shown to initialize the printer.

Contact your reseller's service support team if you find errors not listed above. Please inform Error Code displayed on the lower right of the LCD.

5.2 Valuable Help from You For Troubleshooting

Help us identify the following for us to resolve your problem(s):

- The version number of the software installed.
- You can confirm the version number of driver installed in your Microsoft Windows PC as follow steps:

① Press the start button in the lower left corner of the Windows taskbar to select the printer and fax.

② Select the printer, double clicks.

③ Select the printing preferences on the printer menu.

④ Turn to the card TAB, then click the version.

5.3 Troubleshooting

Do not attempt to use any tool to fix any problem. This may cause serious damage to the printer.

5.3.1 Faults Related to Printing

No print out?

① Check the printer driver

Check compatible printer driver for Microsoft Windows.

Check if this printer is the default driver in Microsoft Windows.

② Check if power is connected to the printer.

Check if the printer is connected correctly to power.

Check if the LCD display shows: **READY**.

Confirm power accessories provided for this printer are correctly installed.

③ Check the USB cable

Check if the USB cable is connected to your printer and your host.

④ Check the ribbon

Check if the ribbon is properly installed. Check if associated parts are locked in properly.

⑤ Check card jam

Check if any card remains in transport area. Check if any card jam.

⑥ Print the test card

You can realize the reverse steps refer to this section.

Blank card ejected?

① Check the ribbon

Check if ribbon run out or is damaged. Replace them if necessary.

② Check if print head is damaged. Print test pattern.

If failed to print the test pattern, contact local reseller for support, or visit website http://www.dascom.com.

Is the printing quality dissatisfactory?

Faults	Probable Cause	Corrective Actions
Defective Spots	Dirty Card Surface	• Check that card surfaces are clean and dust free. • Use new, clean cards.
	Cleaning Roller	• Clean the transport rollers
White Line	Ribbon not properly installed	Check the proper installation of the ribbon. Check if ribbon is folded up.
	Dirty or defective print head	Please contact local reseller.
Vague or Light Image	Improper ribbon installation	Check the proper installation of the ribbon. Check if ribbon is folded up.
	Ribbon not synchronized	Open and close the front cover to synchronize the ribbon.
	Dirty printer or cleaning rollers	Clean the printer.
	Non-genuine cards	Check if your cards meet specifications. Recommend that you purchase cards from Dascom authorized reseller. If the problem persists, please contact your Dascom reseller.
Blank Cards	Improper ribbon installation	Check that print ribbon is installed properly.

Incomplete printout?

① Check manual settings

Check card software design layout matches card dimensions.

Check the landscape/portrait orientation in the driver.

② Check interface cable

If the text is printed in strange colors, use the USB cable supplied with the printer. Check secure and proper connection between printer and your computer.

Try another cable.

③ Check if the printer is clean

See Section 2.3 to clean/replace cleaning rollers.

④ Check if cards are clean

Take precautions to keeps cards free from dust and contamination.

⑤ Check ribbon

Check if ribbon is installed properly. Check that the ribbon is running smoothly.

⑥ Check print head

If a straight white line(s) travels across the length of your card, the print head may be dirty or defective. If the problem persists after cleaning, please contact your Dascom reseller.

5.3.2 Clear Jammed Card

Do not turn off the power. The print job will be lost.

Do not attempt to use any tool (screwdriver or sharp object) to remove a jammed card. Sharp objects may damage the rollers and heating rollers. Damages caused by such action may void the warranty。

To reduce the chance of card jamming

① See Section 2.1.3 to set the proper card thickness dial.

② Use cards with thickness specified in the specifications.

③ Check that cards are not bent.

④ Before putting the cards to the card cassette, shuffle the cards by holding the outside edges to prevent sticking cards.

To take out jammed card

When card jam occurs, the LCD display prompts "Printer Card Jam, press SET Key". The Printer will initialize to eject the card. If the card still can not be ejected, power off the printer and turn the knob.

5.3.3 Change the Print Head

The print head is a heating element and directly affects print quality. A dirty or dusty environment seriously affects its life and can cause damage to the print head.

Consult your Dascom reseller if print head replacement is necessary.

To meet DASCOM's warranty policy for print head replacement, you must:

- Use Dascom approved consumables, including cards, ribbons and service parts.
- Maintain regular cleaning and maintenance of the printer.
- Install the printer in a dust free environment as detailed in the specifications
- Use good well-conditioned cards: clean, without deterioration causing head damage.

5.4 Technical support

If you have trouble configuring and using a printer, read this manual carefully.
If you still can't solve the problem, you can get detailed information and help via the DASCOM partner network.

5.4.1 DASCOM partner network

If you have any problem can't be solved, please contact the DASCOM dealer. If you don't know any DASCOM dealer, please visit WWW.DASCOM.COM to tell us your problems.

DASCOM will inform you of the detailed contact of your local DASCOM dealer .When you call the DASCOM dealer, you must provide the information as following:

① The printer model and serial number.
② The current configuration and operating system.
③ A description of what happened.
④ A description of the steps taken to address this problem.

In addition, to help answer your questions around the clock, WWW.DASCOM.COM provides a variety of explanations for the daily use of printers.

5.4.2 More information

If additional technical assistance is required, you can visit DASCOM website WWW.DASCOM.COM, and find information about the use and troubleshooting of DASCOM printers in the driver and support section.

You can download the latest version of firmware, print driver and use manual, DASCOM printer usage and maintenance related video, and FAQ (FAQ) section.

CHAPTER 6 SPECIFICATION

Model	DC-3300
Printing system	Direct thermal printing
Function	Single-sided printing, edge to edge printing, double-sided printing
Resolution	300×1200DPI
Card thickness	0.25~1.27mm
Card type	PVC, ABS, PET, PET-G 85.6mm×53.98mm (ISO ID-1/CR-80)
Print tones	Input tones: RGB, 256 tones/color, K2 tones Output tones: YMC, 256 tones/color, K2 tones
Ribbon	YMCK Ribbon YMCKK Ribbon YMCKO Ribbon YMCKOK Ribbon BLACK Ribbon
Print speed	Single-sided, colour (YMCKO): 220 cards/hour Monochromatic (K): 1000 cards/hour Double-sided, colour (YMCKO-K): 165 cards/hour
Security feature	Ribbon encryption RFID
Connection	USB (1.0, 1.1, 2.0) Ethernet 10/100Base-T USB-HUB
Option	Duplex, magnetic stripe card, contact smart card, contactless smart card, big card cassette for 200 pieces cards, CardEditor software
	Cleaning card Cleaning stick
Supported OS	Windows XP / Vista / 7 / 8 / 10, 32&64bit OS
Power source	AC 100~240V, 50/60Hz
Dimension (mm)	450×216×234 (without auto duplex) 550×216×234 (with auto duplex)

Weight	7KG
Card feeding capacity	Automatic feed from Card Cassette: 100 pieces of 0.76mm thickness cards (Option: big card cassette for 200 pieces cards) Manual feed: single piece 30 pieces of 0.76mm thickness cards
Card feeding system	Automatic feed from Card Cassette Manual feed (single piece)
Card ejecting	Front in, front out; Front in, rear out
Operation panel	LCD+button
Operating environment	Temperature: 15℃-30℃ Humidity: 35-95% RH
Storage environment	Temperature: 5℃-45℃ Humidity: 35-96% RH

Appendix I OPTIONS

1、Contactless Card Reader

The contactless card reader is installed inside the printer. When loading contactless cards or taking out contactless cards, it is necessary to remove the printer case.

Please contact the after-sales service center to implement the operation by professional personnel.

（1）Switch off the printer. Remove the printer case as shown below.

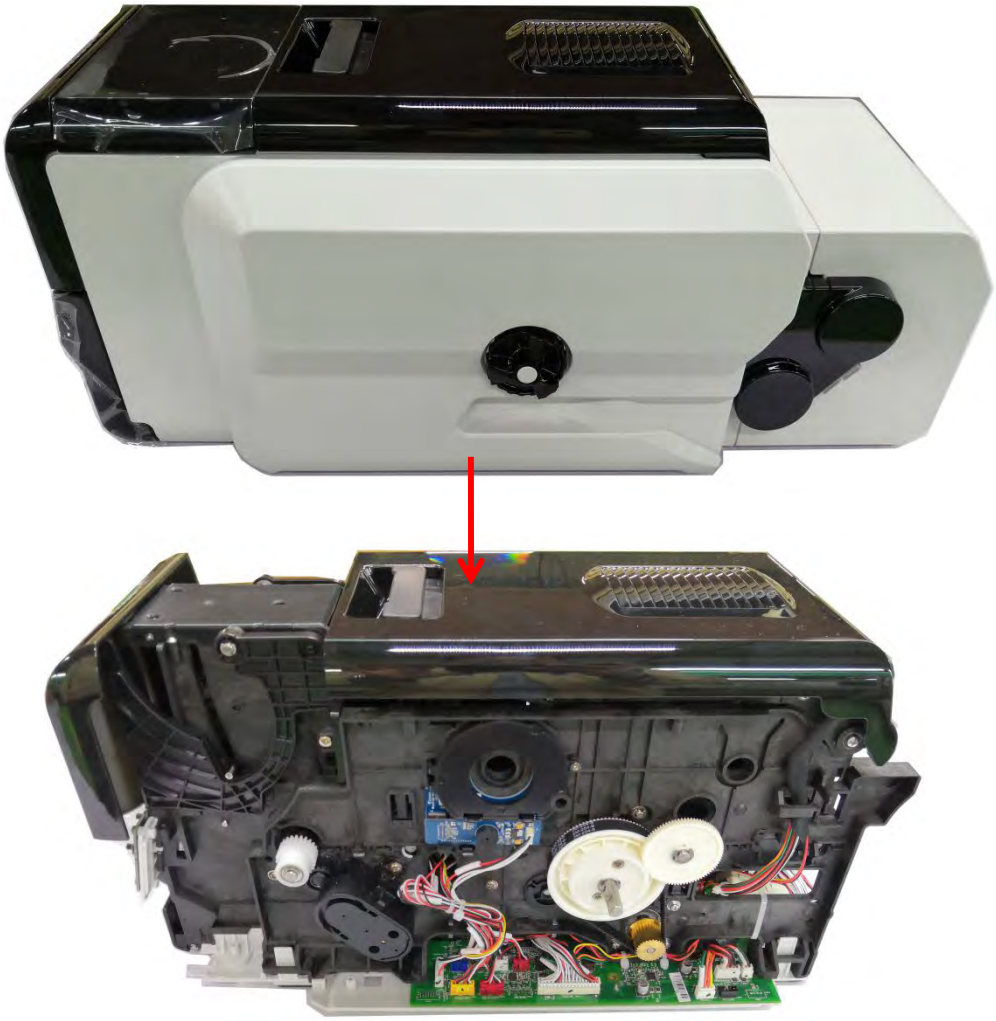

（2）Turn over the printer, and the position of the card reader is shown below.

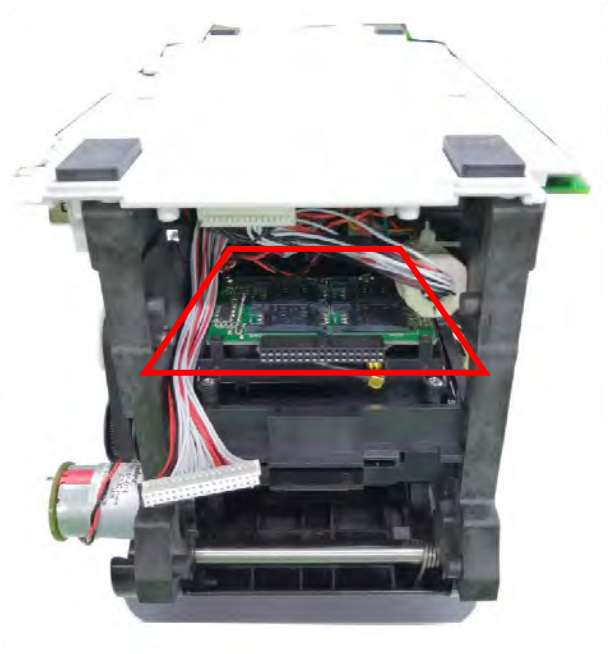

（3）Push the slot cover in the direction indicated by the arrow as shown below. When you hear a “click” sound, turn up the slot cover.

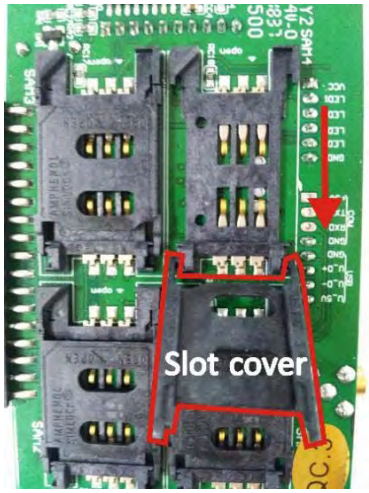

（4）Place the card into the corresponding position of the slot, close the slot cover and push it in the direction indicted by the arrow as shown below. When you hear a “click” sound, the card is installed properly.

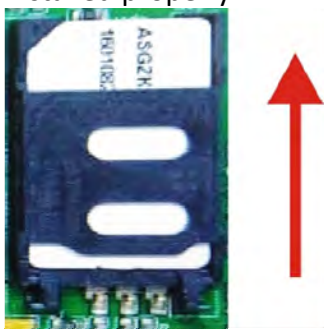

2. Duplex (factory option)

Using duplex option, the printer can realize the double-sided printing feature.

By factory defaults, the printer outputs correctly printed cards to the front slot and rejected wrongly printed cards to the rear slot, respectively. However, these two slots are interchangeable for your preference. It can be set in the “card setup” of the menu under “user mode”.

The duplex has been installed properly before shipment, it is the factory option. If it is damaged, please contact the after-sales service center, asking for the professional repair.

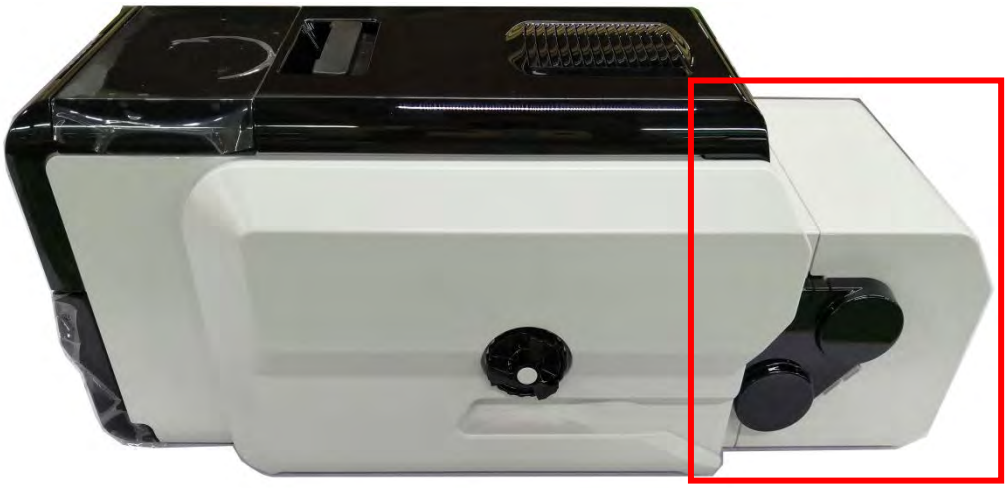

Side view of the printer with the duplex option

Side view of the duplex option

Appendix II FCC STATEMENT

1. This device complies with Part 15 of the FCC Rules. Operation is subject to the following two conditions:

   i. This device may not cause harmful interference.
   ii. This device must accept any interference received, including interference that may cause undesired operation.

2. Changes or modifications not expressly approved by the party responsible for compliance could void the user's authority to operate the equipment.

	This equipment has been tested and found to comply with the limits for a Class B digital device, pursuant to Part 15 of the FCC Rules. These limits are designed to provide reasonable protection against harmful interference in a residential installation.

This equipment generates uses and can radiate radio frequency energy and, if not installed and used in accordance with Dascom instructions, may cause harmful interference to radio communications. However, there is no guarantee that interference will not occur in a particular installation. If this equipment does cause harmful interference to radio or television reception, which can be determined by turning the equipment off and on, the user is encouraged to try to correct the interference by one or more of the following measures:

- Re-orientate or relocate the receiving antenna.
- Increase the separation between the equipment (printer) and receiver.
- Connect the equipment into an electrical outlet on a circuit different from that to which the receiver is connected.
- Consult your dealer or an experienced radio/TV technician for help.

Appendix III DASCOM EPRESENTATIVES

GERMANY
DASCOM Europe GmbH
Heuweg 3
D-89079 Ulm
Deutschland
Phone: +49 (0) 731 2075 0
Fax: +49 (0) 731 2075 100
www.dascom.com

AMERICAS
DASCOM Americas LLC
34 Lakeview Court,
Verona, VA 24482
USA
Phone:+1 (877) 434 13 77
Fax: +1 (540) 242 7221
www.dascom.com

FRANCE
DASCOM Europe GmbH
117 Avenue Victor Hugo
92100 Boulogne-Billancourt
France
Phone: +33 (1) 73 02 51 98
www.dascom.com

SINGAPORE (ASIA PACIFIC)
DASCOM AP Pte Ltd
2 Jurong East Street 21
05-42, IMM Building
Singapore 609601
Phone: +65 6760 8833
Fax: +65 6760 1066
www.dascom.com

UNITED KINGDOM
DASCOM GB Ltd
Hart House, Priestley Road
Basingstoke, Hampshire
RG24 9PU, England
Phone: +44 (0) 1256 355130
Fax: +44 (0) 1256 481400
www.dascom.com

CHINA
Jiangmen Dascom Computer Peripherals
Co.,Ltd.
No.399, Jinxing Road, Jianghai District,
Jiangmen City, Guangdong Province,
P.R.China
www.dascom.com

"All rights reserved. Translations, reprinting or copying by any means of this manual complete or in part or in any different form requires our explicit approval. We reserve the right to make changes to this manual without notice. All care has been taken to ensure accuracy of information contained in this manual. However, we cannot accept responsibility for any errors or damages resulting from errors or inaccuracies of information herein."

2019 © DASCOM