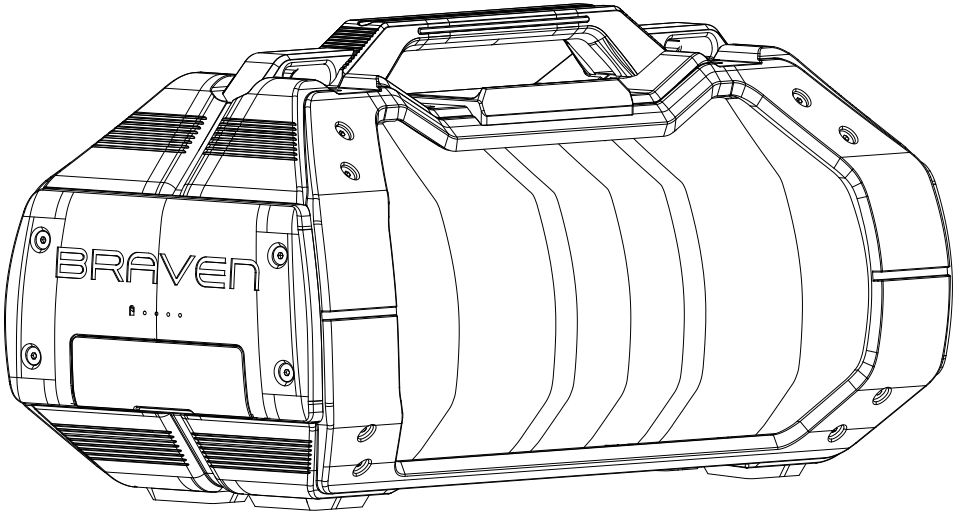

BRAVEN BRV-XXL

User Manual / Manual del Usuario / Manuel de L'utilisateur

© 2015 IUI Audio Inc. (United States) or Platform2 International Limited (other countries). All rights reserved.
© 2015 IUI Audio Inc. (Estados Unidos) o Platform2 International Limited (otros países). Todos los derechos son reservados.
© 2015 IUI Audio Inc. (États-Unis) ou Platform2 International Limited (d'autres pays). Tous droits réservés.

EN

Table of Content

Product Overview	P1-2
Charging the Speaker	P3
By NFC - Pairing with Bluetooth-enabled Device	P4
By Setting - Pairing with Bluetooth-enabled Device	P5
Playing Music with a 3.5mm Audio Line-in Cable	P6
Using with Microphone	P7
Volume / Bass / Treble Control	P8
Charging Your Device	P9
Precautions	P10-11

* Please fully charge before use.
* Please key in “0000” if passcode is required when pairing.
* The speaker will automatically turn off after 15 minutes when there is no connections.
* For optimum performance with your iOS device, please ensure that your device is running iOS 4.1 or above.

EN

Product Overview

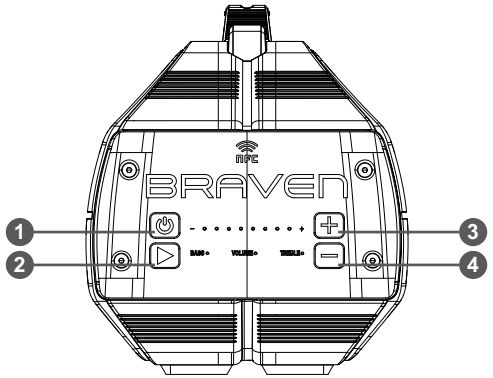

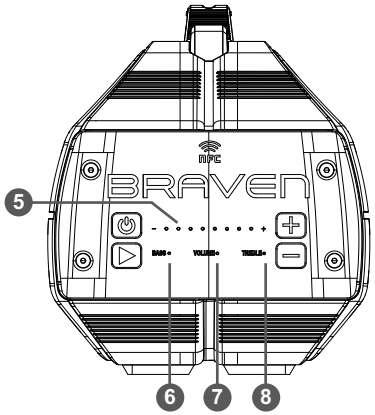

1 Power on/off and Mode button
2 Pairing button
3 Volume / bass / treble up button
4 Volume / bass / treble down button

5 Volume / Bass / Treble level LED indicators
6 Bass mode LED indicator
7 Volume mode LED indicator
8 Treble mode LED indicator

EN

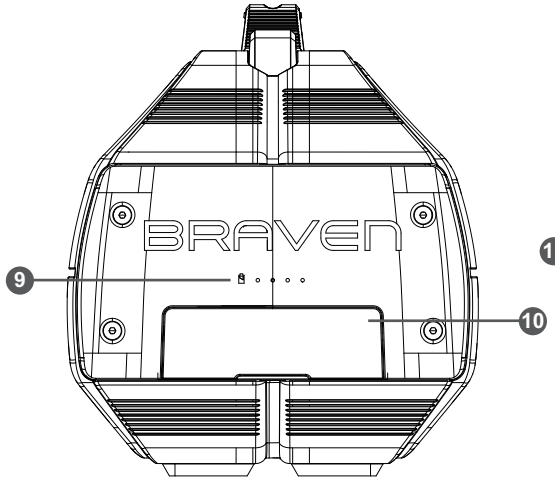

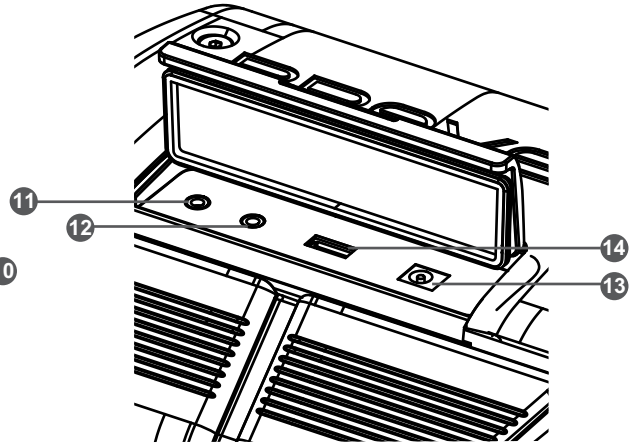

9 Battery level LED indicator
10 Rubber cover

11 3.5mm line-in for music source
12 3.5mm audio line-in for microphone
13 Speaker charging port
14 USB charging out port (1A output)

Charging the Speaker

* Please fully charge your speaker before use.
* To view battery level, it is required to turn on the speaker for battery level LED indication.

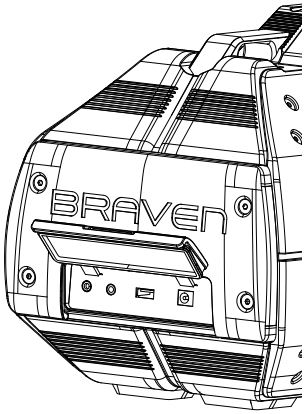

Lift the rubber cover.

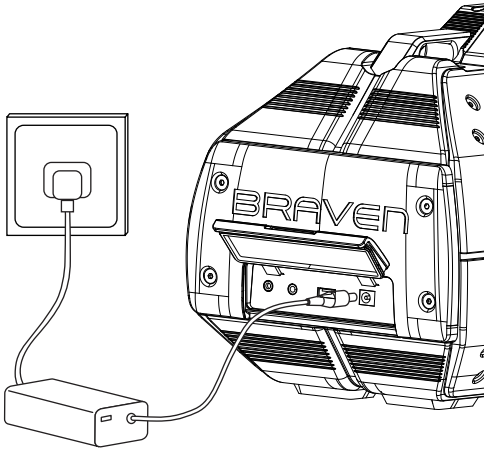

Connect the speaker to power source with the included adapter.

EN

Pairing with Bluetooth-enabled Device - By NFC

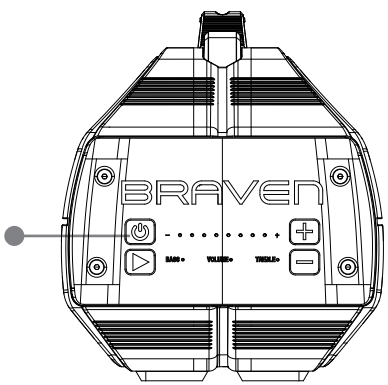

Press and hold the " ⏻ " button until a prompt tone occurs to turn on the speaker.

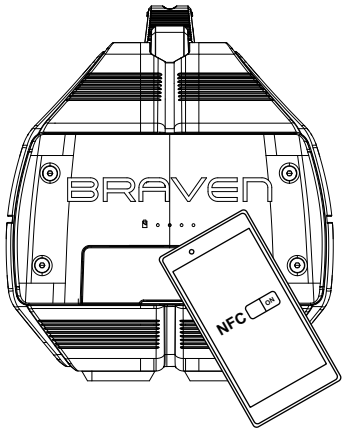

Turn on the NFC feature on your device. Tap you device on the NFC sensor.

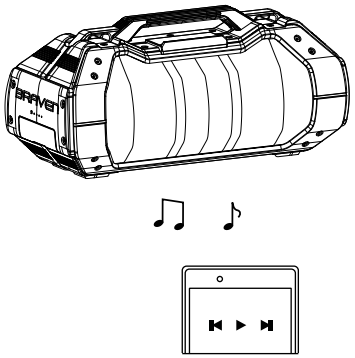

When your device is paired, you will hearing the beep once. You can start playing music.

Pairing with Bluetooth-enabled Device - By Setting

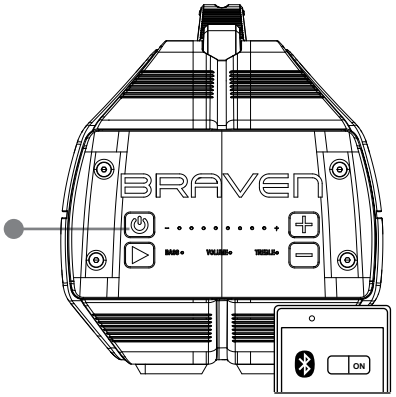

Press and hold the " ⏻ " button until a prompt tone occurs to turn on the speaker.
Turn on the Bluetooth feature on your device.

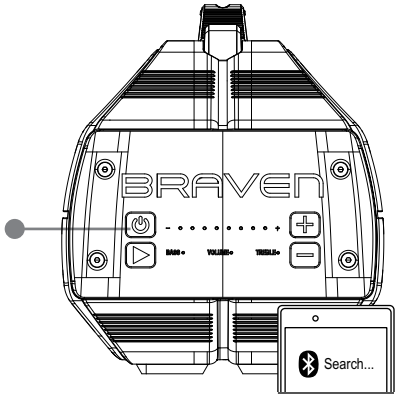

Press and hold the ⏻ " " button until you hear the voice prompt. "Ready to connect"
Search and select "Team Event" on your device.

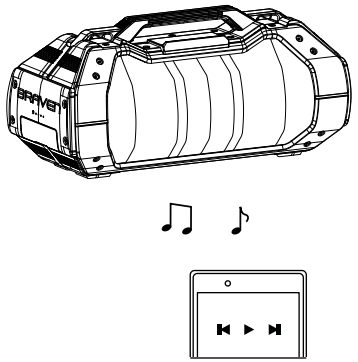

You will hear the voice prompt "We are connected" once successfully paired. You can start playing music.

EN

Playing Music with a 3.5mm Audio Line-in Cable

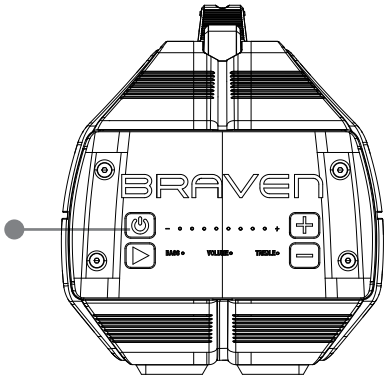

Press and hold the "⏻" button until a prompt tone occurs to turn on the speaker.

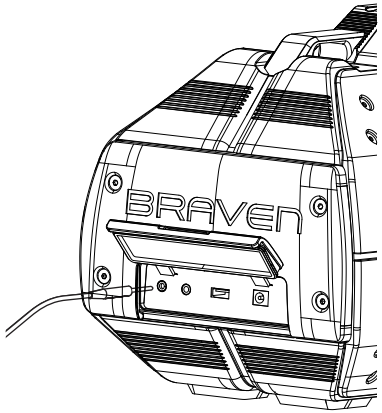

Connect your device and the speaker with a 3.5mm audio line-in cable.

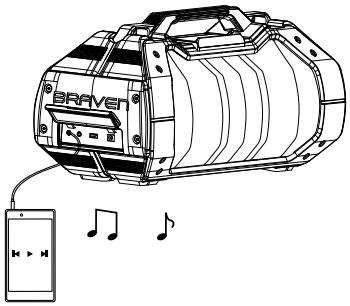

Start playing music from your device.

Using with Microphone

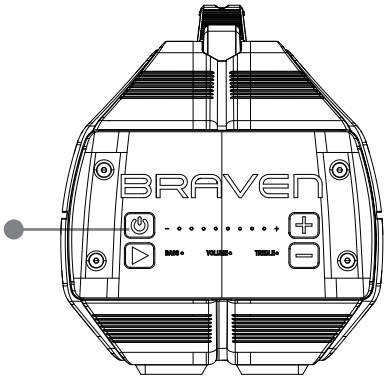

Press and hold the " ⏻" button until a prompt tone occurs to turn on the speaker.

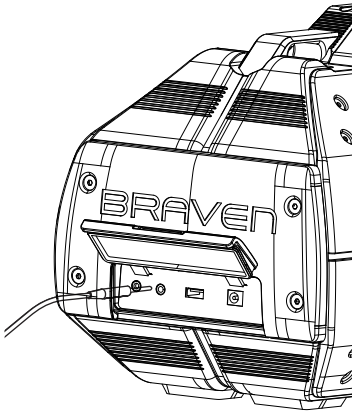

Connect the speaker and the microphone with the 3.5mm jack.

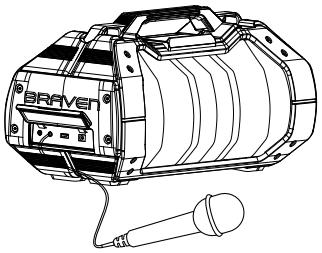

Start using microphone while playing music.

EN

Volume / Bass / Treble Control

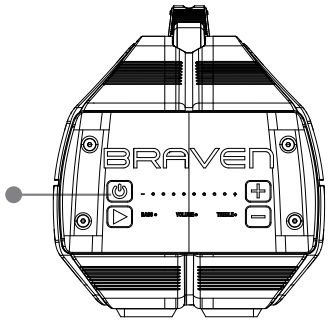

Bass mode Volume mode Treble mode

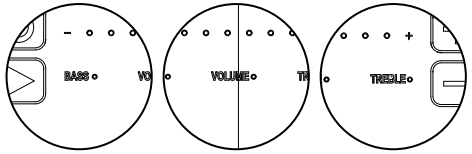

Press the "⏻" button until the corresponding LED indicator illuminates.

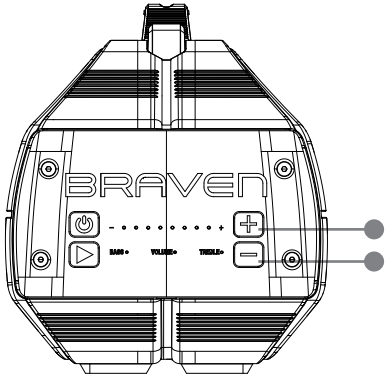

Press the "+" to increase the Volume / Bass / Treble level.
Press the "-" to decrease the Volume / Bass / Treble level.

Charging Your Mobile Device

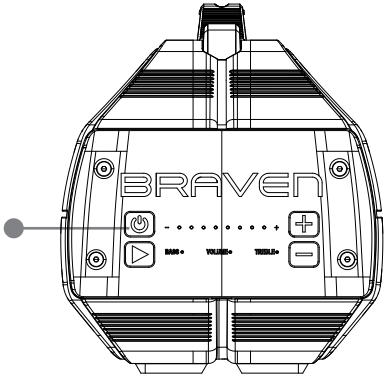

Press and hold the " ⏻ " button until a prompt tone occurs to turn on the speaker.

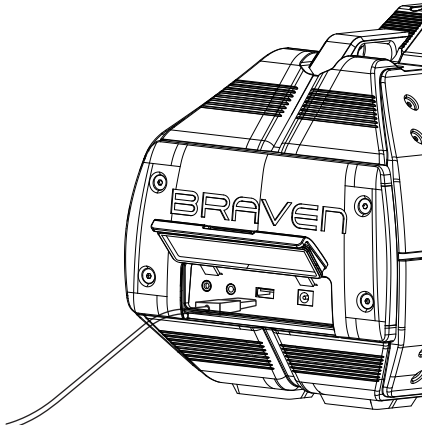

Connect your device and the speaker with a USB cable to start charging.

FCC Statement:

This device complies with part 15 of the FCC Rules. Operation is subject to the following two conditions: (1) This device may not cause harmful interference, and (2) this device must accept any interference received, including interference that may cause undesired operation.

This equipment has been tested and found to comply with the limits for a Class B digital device, pursuant to part 15 of the FCC Rules. These limits are designed to provide reasonable protection against harmful interference in a residential installation. This equipment generates, uses and can radiate radio frequency energy and, if not installed and used in accordance with the instructions, may cause harmful interference to radio communications. However, there is no guarantee that interference will not occur in a particular installation. If this equipment does cause harmful interference to radio or television reception, which can be determined by turning the equipment off and on, the user is encouraged to try to correct the interference by one or more of the following measures:

—Reorient or relocate the receiving antenna.

—Increase the separation between the equipment and receiver.

—Connect the equipment into an outlet on a circuit different from that to which the receiver is connected.

—Consult the dealer or an experienced radio/TV technician for help.

Caution: Any changes or modifications not expressly approved by the party responsible for compliance could void the user's authority to operate the equipment.

IC Statement

This device complies with Industry Canada licence-exempt RSS standard(s). Operation is subject to the following two conditions:
(1) this device may not cause interference, and
(2) this device must accept any interference, including interference that may cause undesired operation of the device.

Le présent appareil est conforme aux CNR d'Industrie Canada applicables aux appareils radio exempts de licence. L'exploitation est autorisée aux deux conditions suivantes :
(1) l'appareil ne doit pas produire de brouillage, et
(2) l'utilisateur de l'appareil doit accepter tout brouillage radioélectrique subi, même si le brouillage est susceptible d'en compromettre le fonctionnement.

IC Radiation Exposure Statement:

This equipment complies with Canada radiation exposure limits set forth for uncontrolled environments.

This transmitter must not be co-located or operating in conjunction with any other antenna or transmitter.

Déclaration d'IC sur l'exposition aux radiations:
Cet équipement est conforme aux limites d'exposition aux radiations définies par le Canada pour des environnements non contrôlés.
Cet émetteur ne doit pas être installé au même endroit ni utilisé avec une autre antenne ou un autre émetteur.