Cambium PTP 550 Series User Guide

System Release 4.1

For Regulatory Review Only

Cambium Networks™

Accuracy

While reasonable efforts have been made to assure the accuracy of this document, Cambium Networks assumes no liability resulting from any inaccuracies or omissions in this document, or from use of the information obtained herein. Cambium reserves the right to make changes to any products described herein to improve reliability, function, or design, and reserves the right to revise this document and to make changes from time to time in content hereof with no obligation to notify any person of revisions or changes. Cambium does not assume any liability arising out of the application or use of any product, software, or circuit described herein; neither does it convey license under its patent rights or the rights of others. It is possible that this publication may contain references to, or information about Cambium products (machines and programs), programming, or services that are not announced in your country. Such references or information must not be construed to mean that Cambium intends to announce such Cambium products, programming, or services in your country.

Copyrights

This document, Cambium products, and 3rd Party software products described in this document may include or describe copyrighted Cambium and other 3rd Party supplied computer programs stored in semiconductor memories or other media. Laws in the United States and other countries preserve for Cambium, its licensors, and other 3rd Party supplied software certain exclusive rights for copyrighted material, including the exclusive right to copy, reproduce in any form, distribute and make derivative works of the copyrighted material. Accordingly, any copyrighted material of Cambium, its licensors, or the 3rd Party software supplied material contained in the Cambium products described in this document may not be copied, reproduced, reverse engineered, distributed, merged or modified in any manner without the express written permission of Cambium. Furthermore, the purchase of Cambium products shall not be deemed to grant either directly or by implication, estoppel, or otherwise, any license under the copyrights, patents or patent applications of Cambium or other 3rd Party supplied software, except for the normal non-exclusive, royalty free license to use that arises by operation of law in the sale of a product.

Restrictions

Software and documentation are copyrighted materials. Making unauthorized copies is prohibited by law. No part of the software or documentation may be reproduced, transmitted, transcribed, stored in a retrieval system, or translated into any language or computer language, in any form or by any means, without prior written permission of Cambium.

License Agreements

The software described in this document is the property of Cambium and its licensors. It is furnished by express license agreement only and may be used only in accordance with the terms of such an agreement.

High Risk Materials

Cambium and its supplier(s) specifically disclaim any express or implied warranty of fitness for any high risk activities or uses of its products including, but not limited to, the operation of nuclear facilities, aircraft navigation or aircraft communication systems, air traffic control, life support, or weapons systems (“High Risk Use”). Any High Risk is unauthorized, is made at your own risk and you shall be responsible for any and all losses, damage or claims arising out of any High Risk Use.

© 2017 Cambium Networks Limited. All Rights Reserved.

Contents

About This User Guide 1
- Contacting Cambium Networks 1
- Purpose 1
- Cross references 2
- Feedback 2

Important regulatory information 3
- Radar avoidance 3
- USA specific information 3
- Canada specific information 4
- Renseignements specifiques au Canada 4
- EU Declaration of Conformity 5
- Application firmware 5
- Specific expertise and training for professional installers 5
- External antennas 5
- Antennas externes 6
- Ethernet networking skills 6
- Lightning protection 6
- Training 6

Problems and warranty 7
- Reporting problems 7
- Repair and service 7
- Hardware warranty 7

Security advice 8

Warnings, cautions, and notes 9
- Warnings 9
- Cautions 9
- Notes 9

Caring for the environment 10
- In EU countries 10
- In non-EU countries 10

Chapter 1: Product description 1-1

Overview of the PTP 550 Series 1-2
- Purpose 1-2
- Key features 1-2
- Frequency bands 1-3
- Typical bridge deployment 1-4
- Hardware overview 1-4

Wireless operation 1-6
- Time division duplexing 1-6
- Link Scheduler 1-8
- OFDM and channel bandwidth 1-8

Adaptive modulation 1-9
MIMO 1-9
Dynamic spectrum optimization 1-10
Radar avoidance 1-11
Encryption 1-11
License keys and regulatory bands 1-12
PTP networks 1-13
TDD synchronization 1-14
Ethernet bridging 1-15
Ethernet ports 1-15
Data network 1-15
Protocol model 1-16
System management 1-17
Management agent 1-17
Network management 1-18
RADIUS authentication 1-19
SNMP 1-20
Network Time Protocol (NTP) 1-20
System logging (syslog) 1-21
Software upgrade 1-21
Chapter 2: System hardware 2-1
Outdoor unit (ODU) 2-2
ODU description 2-2
PTP 550 Integrated ODU 2-3
PTP 550 Connectorized ODU 2-4
ODU accessories 2-5
Mounting bracket 2-6
ODU interfaces 2-6
ODU specifications 2-8
Power supply units (PSU) 2-9
PSU description 2-9
PSU part numbers 2-10
AC Power Injector interfaces 2-10
AC+DC Enhanced Power Injector interfaces 2-10
PSU specifications 2-12
Antennas and antenna cabling 2-14
Antenna requirements 2-14
RF cable and connectors 2-14
Antenna accessories 2-14
FCC and IC approved antennas 2-15
Antennes approuvées par la FCC et IC 2-16
Ethernet cabling 2-25
Ethernet standards and cable lengths 2-25
Outdoor copper Cat5e Ethernet cable 2-26
Cable grounding kit 2-27
Lightning protection unit (LPU) and grounding kit 2-28

RJ45 connectors and spare glands 2-29
Cable hoisting grip 2-30
Drop cable tester 2-30
Indoor Cat5e cable 2-30
SFP module kits 2-30
Optical cable and connectors 2-32
Chapter 3: System planning 3-33
Typical deployment 3-34
ODU with POE interface to PSU 3-34
SFP Ethernet interfaces 3-36
Site planning 3-39
Grounding and lightning protection 3-39
Lightning protection zones 3-39
Site grounding system 3-40
ODU and external antenna location 3-41
ODU ambient temperature limits 3-41
ODU wind loading 3-42
PSU DC power supply 3-42
PSU AC power supply 3-43
PSU location 3-43
Drop cable grounding points 3-43
LPU location 3-45
Multiple LPUs 3-45
Radio spectrum planning 3-48
General wireless specifications 3-48
Regulatory limits 3-49
Conforming to the limits 3-49
Available spectrum 3-49
Channel bandwidth 3-50
Frequency selection 3-50
Link planning 3-52
LINKPlanner 3-52
Range and obstacles 3-52
LINKPlanner for synchronized networks 3-52
Path loss 3-53
Adaptive modulation 3-53
Planning for connectorized units 3-54
When to install connectorized units 3-54
Choosing external antennas 3-54
Calculating RF cable length (5.8 GHz FCC only) 3-55
Configuration options for TDD synchronization 3-56
Data network planning 3-57
Ethernet interfaces 3-57
VLAN membership 3-57
IP interface 3-57
Green Ethernet switches 3-58

Network management planning 3-59
Planning for SNMP operation 3-59
Enabling SNMP 3-59
Security planning 3-60
Planning for NTP operation 3-60
System threshold 3-61
Chapter 4: Legal and regulatory information 4-1
Cambium Networks end user license agreement 4-2
Definitions 4-2
Acceptance of this agreement 4-2
Grant of license 4-2
Conditions of use 4-3
Title and restrictions 4-4
Confidentiality 4-4
Right to use Cambium's name 4-5
Transfer 4-5
Updates 4-5
Maintenance 4-5
Disclaimer 4-6
Limitation of liability 4-6
U.S. government 4-6
Term of license 4-7
Governing law 4-7
Assignment 4-7
Survival of provisions 4-7
Entire agreement 4-7
Third party software 4-7
Source Code Requests 4-8
Preamble 4-25
TERMS AND CONDITIONS FOR COPYING, DISTRIBUTION AND MODIFICATION 4-26
END OF TERMS AND CONDITIONS 4-30
Compliance with safety standards 4-115
Electrical safety compliance 4-115
Electromagnetic compatibility (EMC) compliance 4-115
Human exposure to radio frequency energy 4-115
Compliance with radio regulations 4-120
Type approvals 4-121
FCC/IC compliance 4-122
European Union compliance 4-130
Chapter 5: Installation 5-1
Safety 5-2
Power lines 5-2
Working at heights 5-2
PSU 5-2
Grounding and protective earth 5-2
AC supply 5-2

DC supply 5-3
Powering down before servicing 5-3
Primary disconnect device 5-3
External cables 5-3
Drop cable tester 5-3
RF exposure near the antenna 5-3
Minimum separation distances 5-3
Grounding and lightning protection requirements 5-4
Grounding cable installation methods 5-4
Siting ODUs and antennas 5-4
Thermal Safety 5-4
Installing the ODU and top LPU 5-5
Attach ground cables to the ODU 5-5
Mount the ODU on the mast 5-5
Mount the top LPU 5-8
Interconnect and ground the ODU and top LPU 5-8
Install external antennas for a connectorized ODU 5-10
Installing the copper Cat5e Ethernet interface 5-12
Install the ODU to top LPU drop cable 5-12
Install the main drop cable 5-14
Install the bottom LPU to PSU drop cable 5-16
Test resistance in the drop cable 5-18
Installing the PSU 5-20
Installing the AC Power Injector 5-20
Installing the AC+DC Enhanced Power Injector 5-21
Installing an SFP Ethernet interface 5-22
Fitting the long cable gland 5-24
Inserting the SFP module 5-25
Connecting the cable 5-27
Fitting the gland 5-28
Removing the cable and SFP module 5-30
Supplemental installation information 5-31
Stripping drop cable 5-31
Creating a drop cable grounding point 5-32
Weatherproofing an N type connector 5-35
Replacing PSU fuses 5-38
Chapter 6: Configuration and alignment 6-1
Preparing for configuration and alignment 6-2
Safety precautions 6-2
Regulatory compliance 6-2
Selecting configuration options 6-2
Generating license keys 6-3
Connecting to the unit 6-4
Configuring the management PC 6-4
Connecting to the PC and powering up 6-5
Using the web interface 6-6

Logging into the web interface 6-6
Using the menu options 6-7
Other configuration tasks 6-8
Connecting to the network 6-8
Chapter 7: Operation and Troubleshooting 7-9
General Planning for Troubleshooting 7-10
General Fault Isolation Process 7-10
Questions to Help Isolate the Problem 7-11
Upgrading device software 7-12
Testing hardware 7-13
Checking the power supply LED 7-13
Power LED is off 7-13
Ethernet LED is off 7-13
Troubleshooting the radio link 7-16
Module has lost or does not establish radio connectivity 7-16
Link is unreliable or does not achieve data rates required 7-17
Module Has Lost or Does Not Gain GPS Synchronization 7-17
Using the device external reset button 7-18
Resetting ODU to factory defaults by power cycling 7-19
Glossary I

About This User Guide

This guide describes the planning, installation, configuration and operation of the Cambium PTP 550 Series of point-to-point wireless Ethernet bridges. It is intended for use by the system designer, system installer and system administrator.

For radio network design, refer to the following chapters:

- Chapter 1: Product description
- Chapter 2: System hardware
- Chapter 3: System planning
- Chapter 4: Legal and regulatory information

For radio equipment installation, refer to the following chapter:

- Chapter 5: Installation

For system configuration, monitoring and fault-finding, refer to the following chapters:

- Chapter 6: Configuration and alignment

Contacting Cambium Networks

Support website:	http://www.cambiumnetworks.com/support
Main website:	http://www.cambiumnetworks.com
Sales enquiries:	solutions@cambiumnetworks.com
Support enquiries:	support@cambiumnetworks.com
Telephone number list:	http://www.cambiumnetworks.com/contact
Address:	Cambium Networks Limited, Linhay Business Park, Eastern Road, Ashburton, Devon, UK, TQ13 7UP

Purpose

Cambium Networks Point-To-Point (PTP) documents are intended to instruct and assist personnel in the operation, installation and maintenance of the Cambium PTP equipment and ancillary devices. It is recommended that all personnel engaged in such activities be properly trained.

Cambium disclaims all liability whatsoever, implied or express, for any risk of damage, loss or reduction in system performance arising directly or indirectly out of the failure of the customer, or anyone acting on the customer's behalf, to abide by the instructions, system parameters, or recommendations made in this document.

Cross references

References to external publications are shown in italics. Other cross references, emphasized in blue text in electronic versions, are active links to the references.

This document is divided into numbered chapters that are divided into sections. Sections are not numbered, but are individually named at the top of each page, and are listed in the table of contents.

Feedback

We appreciate feedback from the users of our documents. This includes feedback on the structure, content, accuracy, or completeness of our documents. Send feedback to support@cambiumnetworks.com.

Important regulatory information

The PTP 550 product is certified as an unlicensed device in frequency bands where it is not allowed to cause interference to licensed services (called primary users of the bands).

Radar avoidance

In countries where radar systems are the primary band users, the regulators have mandated special requirements to protect these systems from interference caused by unlicensed devices. Unlicensed devices must detect and avoid co-channel operation with radar systems.

The PTP 550 provides detect and avoid functionality for countries and frequency bands requiring protection for radar systems.

Installers and users must meet all local regulatory requirements for radar detection. To meet these requirements, users must install a license key for the correct country during commissioning of the PTP 550. If this is not done, installers and users may be liable to civil and criminal penalties.

Contact Cambium Customer Support if more guidance is required.

PTP 550 dual-channel radar avoidance

PTP 550 performs DFS detection and radar avoidance on each radio interface independently. The detect and avoid mechanisms of one radio interface do not affect the other radio interface.

USA specific information

Caution

This device complies with Part 15 of the FCC Rules. Operation is subject to the following two conditions:

- This device may not cause harmful interference, and
- This device must accept any interference received, including interference that may cause undesired operation.

The USA Federal Communications Commission (FCC) requires manufacturers to implement special features to prevent interference to radar systems that operate in the band 5470 MHz to 5725 MHz. These features must be implemented in all products able to operate outdoors in this band.

Manufacturers must ensure that such radio products cannot be configured to operate outside of FCC rules; specifically it must not be possible to disable or modify the radar protection functions that have been demonstrated to the FCC.

In order to comply with these FCC requirements, Cambium supplies variants of the PTP 550 for operation in the USA. These variants are only allowed to operate with license keys that comply with FCC rules.

Other variants of the PTP 550 are available for use in the rest of the world, but these variants are not supplied to the USA except under strict controls, when they are needed for export and deployment outside the USA.

Canada specific information

Caution

This device complies with Industry Canada's licence-exempt RSSs. Operation is subject to the following two conditions:

(1) This device may not cause interference; and

(2) This device must accept any interference, including interference that may cause undesired operation of the device.

Industry Canada requires manufacturers to implement special features to prevent interference to weather radar systems that operate in the band 5600 MHz to 5650 MHz. These features must be implemented in all products able to operate outdoors in the band 5470 MHz to 5725 MHz.

Manufacturers must ensure that such radio products cannot be configured to operate outside of IC rules; specifically it must not be possible to disable or modify the radar protection functions that have been demonstrated to IC.

In order to comply with these IC requirements, Cambium supplies variants of the PTP 550 for operation in Canada. These variants are only allowed to operate with license keys that comply with IC rules. In particular, operation of radio channels overlapping the band 5600 MHz to 5650 MHz is not allowed and these channels are permanently barred.

In addition, other channels may also need to be barred when operating close to weather radar installations.

Other variants of the PTP 550 are available for use in the rest of the world, but these variants are not supplied to Canada except under strict controls, when they are needed for export and deployment outside Canada.

Renseignements specifiques au Canada

Attention

Le présent appareil est conforme aux CNR d'Industrie Canada applicables aux appareils radio exempts de licence. L'exploitation est autorisée aux deux conditions suivantes :

(1) l'appareil ne doit pas produire de brouillage, et

(2) l'utilisateur de l'appareil doit accepter tout brouillage radioélectrique subi, même si le brouillage est susceptible d'en compromettre le fonctionnement.

Industry Canada (IC) a demandé aux fabricants de mettre en œuvre des mécanismes spécifiques pour éviter d'interférer avec des systèmes radar fonctionnant dans la bande 5600 MHz à 5650 MHz. Ces mécanismes doivent être mis en œuvre dans tous les produits capables de fonctionner à l'extérieur dans la bande 5470 MHz à 5725 MHz.

Les fabricants doivent s'assurer que les produits de radiocommunications ne peuvent pas être configurés pour fonctionner en dehors des règles IC, en particulier, il ne doit pas être possible de désactiver ou modifier les fonctions de protection des radars qui ont été démontrés à IC.

Afin de se conformer à ces exigences de IC, Cambium fournit des variantes du PTP 550 exclusivement pour le Canada. Ces variantes ne permettent pas à l'équipement de fonctionner en dehors des règles de IC. En particulier, le fonctionnement des canaux de radio qui chevauchent la bande 5600 MHz à 5650 MHz est interdite et ces canaux sont définitivement exclus.

EU Declaration of Conformity

Hereby, Cambium Networks declares that the Cambium PTP 550 Series Wireless Ethernet Bridge complies with the essential requirements and other relevant provisions of Directive 1999/5/EC. The declaration of conformity may be consulted at:

http://www.cambiumnetworks.com/support/ec-doc

Application firmware

Download the latest PTP 550 Series firmware and install it in the Outdoor Units (ODUs) before deploying the PTP 550 equipment. Instructions for installing firmware are provided in Upgrading device software on page 7-12.

Specific expertise and training for professional installers

To ensure that the PTP 550 is installed and configured in compliance with the requirements of Industry Canada and the FCC, installers must have the radio engineering skills and training described in this section. This is particularly important when installing and configuring a PTP 550 system for operation in the 5.1 GHz and 5.4 GHz UNII bands.

External antennas

When using a connectorized version of the product (as compared to the version with an integrated antenna), the conducted transmit power may need to be reduced to ensure the regulatory limit on transmitter EIRP is not exceeded. The installer must have an understanding of how to compute the effective antenna gain from the actual antenna gain and the feeder cable losses.

The ranges of permissible values for maximum antenna gain and feeder cable losses are included in this user guide together with a sample calculation. The product GUI automatically applies the correct conducted power limit to ensure that it is not possible for the installation to exceed the EIRP limit, when the appropriate values for antenna gain and feeder cable losses are entered into the GUI.

Antennas externes

Lorsque vous utilisez une version du produit sans antenne intégrée, il peut être nécessaire de réduire la puissance d'émission pour garantir que la limite réglementaire de puissance isotrope rayonnée équivalente (PIRE) n'est pas dépassée. L'installateur doit avoir une bonne compréhension de la façon de calculer le gain de l'antenne de gain de l'antenne réelle et les pertes dans les câbles de connections.

La plage de valeurs admissibles pour un gain maximal de l'antenne et des pertes de câbles de connections sont inclus dans ce guide d'utilisation avec un exemple de calcul. L'interface utilisateur du produit applique automatiquement la limite de puissance menée correct afin de s'assurer qu'il ne soit pas possible pour l'installation de dépasser la limite PIRE, lorsque les valeurs appropriées pour le gain d'antenne et les pertes de câbles d'alimentation sont entrées dans l'interface utilisateur.

Ethernet networking skills

The installer must have the ability to configure IP addressing on a PC and to set up and control products using a web browser interface.

Lightning protection

To protect outdoor radio installations from the impact of lightning strikes, the installer must be familiar with the normal procedures for site selection, bonding and grounding. Installation guidelines for the PTP 550 can be found in Chapter 2: System hardware and Chapter 5: Installation.

Training

The installer needs to have basic competence in radio and IP network installation. The specific requirements applicable to the PTP 550 should be gained by reading Chapter 5: Installation and Chapter 6: Configuration and alignment and by performing sample set ups at base workshop before live deployments.

Problems and warranty

Reporting problems

If any problems are encountered when installing or operating this equipment, follow this procedure to investigate and report:

1. Search this document and the software release notes of supported releases.
2. Visit the support website.
3. Ask for assistance from the Cambium product supplier.
4. Gather information from affected units, such as any available diagnostic downloads.
5. Escalate the problem by emailing or telephoning support.

Repair and service

If unit failure is suspected, obtain details of the Return Material Authorization (RMA) process from the support website.

Hardware warranty

Cambium's standard hardware warranty is for one (1) year from date of shipment from Cambium Networks or a Cambium distributor. Cambium Networks warrants that hardware will conform to the relevant published specifications and will be free from material defects in material and workmanship under normal use and service. Cambium shall within this time, at its own option, either repair or replace the defective product within thirty (30) days of receipt of the defective product. Repaired or replaced product will be subject to the original warranty period but not less than thirty (30) days.

To register PTP products or activate warranties, visit the support website. For warranty assistance, contact the reseller or distributor.

Caution

Using non-Cambium parts for repair could damage the equipment or void warranty. Contact Cambium for service and repair instructions.

Portions of Cambium equipment may be damaged from exposure to electrostatic discharge. Use precautions to prevent damage.

Security advice

Cambium Networks systems and equipment provide security parameters that can be configured by the operator based on their particular operating environment. Cambium recommends setting and using these parameters following industry recognized security practices. Security aspects to be considered are protecting the confidentiality, integrity, and availability of information and assets. Assets include the ability to communicate, information about the nature of the communications, and information about the parties involved.

In certain instances Cambium makes specific recommendations regarding security practices, however the implementation of these recommendations and final responsibility for the security of the system lies with the operator of the system.

Warnings, cautions, and notes

The following describes how warnings and cautions are used in this document and in all documents of the Cambium Networks document set.

Warnings

Warnings precede instructions that contain potentially hazardous situations. Warnings are used to alert the reader to possible hazards that could cause loss of life or physical injury. A warning has the following format:

Warning

Warning text and consequence for not following the instructions in the warning.

Cautions

Cautions precede instructions and are used when there is a possibility of damage to systems, software, or individual items of equipment within a system. However, this damage presents no danger to personnel. A caution has the following format:

Caution

Caution text and consequence for not following the instructions in the caution.

Notes

A note means that there is a possibility of an undesirable situation or provides additional information to help the reader understand a topic or concept. A note has the following format:

Note

Note text.

Caring for the environment

The following information describes national or regional requirements for the disposal of Cambium Networks supplied equipment and for the approved disposal of surplus packaging.

In EU countries

The following information is provided to enable regulatory compliance with the European Union (EU) directives identified and any amendments made to these directives when using Cambium equipment in EU countries.

Disposal of Cambium equipment

European Union (EU) Directive 2002/96/EC Waste Electrical and Electronic Equipment (WEEE)

Do not dispose of Cambium equipment in landfill sites. For disposal instructions, refer to http://www.cambiumnetworks.com/support/weee-compliance

Disposal of surplus packaging

Do not dispose of surplus packaging in landfill sites. In the EU, it is the individual recipient's responsibility to ensure that packaging materials are collected and recycled according to the requirements of EU environmental law.

In non-EU countries

In non-EU countries, dispose of Cambium equipment and all surplus packaging in accordance with national and regional regulations.

Chapter 1: Product description

This chapter provides a high level description of products in the PTP 550 series. It describes in general terms the function of the product, the main product variants and the main hardware components. The following topics are described in this chapter:

- Overview of the PTP 550 Series on page 1-2 introduces the key features, typical uses, product variants and components of the PTP 550 series.
- Wireless operation on page 1-6 describes how the PTP 550 wireless link is operated, including modulation modes, power control and spectrum management. links. The PTP 550 link can be synchronized by the Cambium Networks CMM 5 module.
- The CMM5 (Cluster Management Module) is the latest generation of solutions for the distribution of TDD Sync signals and Power-over-Ethernet (PoE) in the field.

- Ethernet bridging on page 1-14 describes how the PTP 550 controls Ethernet data, in both the customer data and system management networks.
- System management on page 1-17 introduces the PTP 550 management system, including the web interface, installation, configuration, security, alerts and upgrades.

Overview of the PTP 550 Series

This section introduces the key features, typical uses, product variants and components of the PTP 550 series.

Purpose

Cambium PTP 550 Series Bridge products are designed for Ethernet bridging over point-to-point microwave links in the unlicensed 5 GHz frequency band. Users must ensure that the PTP 550 Series complies with local operating regulations.

The PTP 550 Series acts as a transparent bridge between two segments of the operator's network. In this sense, it can be treated as a virtual wired connection between two points. The PTP 550 Series forwards 802.3 Ethernet frames destined for the other part of the network and filters frames it does not need to forward. The system is transparent to higher-level protocols such as VLANs and Spanning Tree.

Key features

PTP 550 is a rugged high-capcity outdoor point-to point link wireless device in the unlicensed 5 GHz frequency bands with a maximum UDP throughput of 1.4 Gbps (when operating with 160 MHz maximum aggregate bandwidth). It is capable of operating in line-of-sight (LOS) and near-LOS conditions. Its maximum LOS range is 122 miles (200 km). PTP 550 is available as an integrated unit with a dual-polarized 23 dBi flat-plate antenna, and as a connectorized unit for use with a separate dual-polarized antenna. One point-to-point link consists of two PTP 550 devices.

PTP 550 supports asymmetric dual-channel operation, with channel size between 20 MHz and 80 MHz in each channel. The maximum aggregate bandwidth is 160 MHz (two 80 MHz channels). Each channel supports 2 x 2 MIMO operation with polarization multiplexing or polarization diversity, resulting in a form of 4 x 4 MIMO. Dual-channel operation can use contiguous or non-contiguous channels, and the channels can be in the same regulatory band or different regulatory bands. Channel bandwidth can be selected independently in the two channels and adaptive modulation also acts independently.

PTP 550 provides for TDD (Time Division Duplex) synchronization of multiple devices using an external 1 Hz source (GPS). The 1 Hz reference is carried on the standard Ethernet cable using proprietary Cambium Sync. Utilizing GPS sync, the PTP 550 is an ideal fit for networks that require capacity and reliability for superior QoS in remote and underserved areas. The PTP 550 solution features an efficient GPS synchronized operational mode that permits highly scalable frequency reuse.

PTP 550 is based on highly-integrated wireless semiconductor components designed to meet the IEEE 802.11ac standard, however the PTP 550 device has a proprietary air interface for the main point-to-point link.

PTP 550 is powered by standard power-over-Ethernet to a 1000Base-T port. The unit additionally has an SFP port for optional addition of a fiber or copper SFP module.

PTP 550 supports quality of service (QoS) classification capability and supports three traffic priorities. Management of the unit is conducted via the same interface as the bridged traffic (in-band Management).

PTP 550 supports RADIUS EAP-TTLS authentication and VSA support for MIR (Maximum Information Rate, or traffic limiting).

A summary of the main PTP 550 characteristics is listed under Table 1.

Table 1 Main characteristics of the PTP 550 Series

Characteristic	Value
Topology	PTP
Wireless link condition	LOS, near LOS
Scheduler	TDD
Connectivity	Ethernet
Operating frequencies	Unlicensed bands, 5 GHz
Channel bandwidth	20 MHz, 40 MHz, 80 MHz (independent per channel)
Data rate	1.4 Gbps

Frequency bands

The PTP 550 ODU can be configured by the user to operate in the following bands:

- 5.1 GHz band: 5150 to 5250 MHz
- 5.2 GHz band: 5250 to 5350 MHz
- 5.4 GHz band: 5470 to 5725 MHz
- 5.8 GHz band: 5725 to 5950 MHz

Typical bridge deployment

The PTP 550 is an "all outdoor" solution consisting of a wireless bridge between two sites. Each site installation consists of a PTP 550 Integrated or PTP 550 Connectorized outdoor unit (ODU) and a power injector (PSU) (Figure 1). The ODU provides the following interfaces:

- PSU port: This provides proprietary power over Ethernet and connection to the management and/or data networks via 100BASE-TX or 1000BASE-T Ethernet. In the basic configuration, this is the only Ethernet connection to the ODU.
- SFP port: This provides an optical or copper Gigabit Ethernet interface for customer data and/or network management.

Figure 1 PTP 550 typical bridge deployment

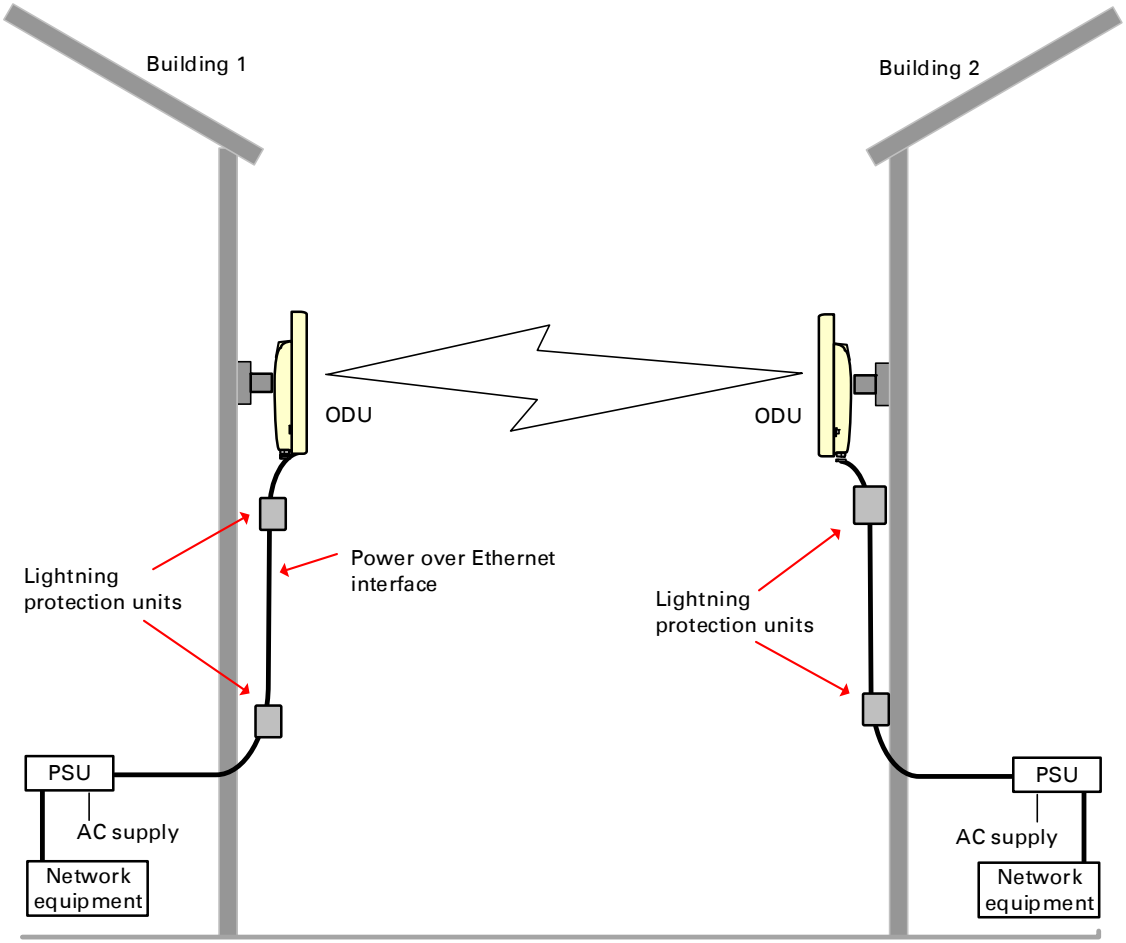

Hardware overview

The main hardware components of the PTP 550 are as follows:

- Outdoor unit (ODU): The ODU is a self-contained transceiver unit that houses both radio and networking electronics. The PTP 550 ODU is supplied in two configurations:

  - A PTP 550 Integrated ODU attached to a 23 dBi flat plate antenna
  - A PTP 550 Connectorized ODU intended to work with separately mounted external antennas.
- The ODU is supplied in the following regional variants:
  - FCC, intended for deployment in the USA and Canada
  - EU, intended for deployment in countries of the European Union or other countries following ETSI regulations
  - Rest of the World (RoW), intended for deployment in countries other than USA and EU countries.
- Power supply unit (PSU): There is a choice of two PSUs:
- Antennas and antenna cabling: Connectorized ODUs require external antennas connected using RF cable.
- Ethernet cabling: All configurations require a copper Ethernet Cat5e connection from the ODU (PSU port) to the PSU. Advanced configurations may also require a copper or optical Ethernet connection from the ODU (SFP port) to network terminating equipment or another device.
- Lightning protection unit (LPU): LPUs are installed in the PSU copper drop cables to provide transient voltage surge suppression.
- Ground cables: ODU, LPUs and outdoor copper Ethernet cables are bonded to the site grounding system using ground cables.

For more information about these components, including interfaces, specifications and Cambium part numbers, refer to Chapter 2: System hardware.

Wireless operation

This section describes how the PTP 550 wireless link is operated, including modulation modes, power control and security.

Time division duplexing

TDD cycle

PTP 550 links operate using Time Division Duplexing (TDD). They use a TDD cycle in which the ODUs alternately transmit and receive TDD bursts. The TDD cycle is illustrated in Figure 2. The steps in the cycle are as follows:

1. The TDD master transmits a burst to the TDD slave.
2. A delay occurs as the master-slave burst propagates over the link.
3. The slave receives the burst from the master.
4. The slave processes the master-slave burst.
5. The slave transmits a burst to the master.
6. A delay occurs as the slave-master burst propagates over the link.
7. The master receives the burst from the slave.
8. The master transmits the next burst to the slave.

The frame duration must be long enough to allow the master to receive the complete burst in 7 before starting to transmit in 8.

TDD frame parameters

The TDD burst duration varies depending on the following:

- Channel bandwidth
- Link range
- Link optimization mode
- Link symmetry
- Offered traffic loading.

The TDD frame duration varies depending on the following:

- TDD burst duration master-slave.
- TDD burst duration slave-master.
- Link range.

The propagation delay in Step 2 is necessarily equal to the propagation delay in Step 6, and is determined solely by the link range. There may be added delays between rx and tx on the master and slave to minimize interference, as set up by the link planner or installer.

Figure 2 TDD cycle

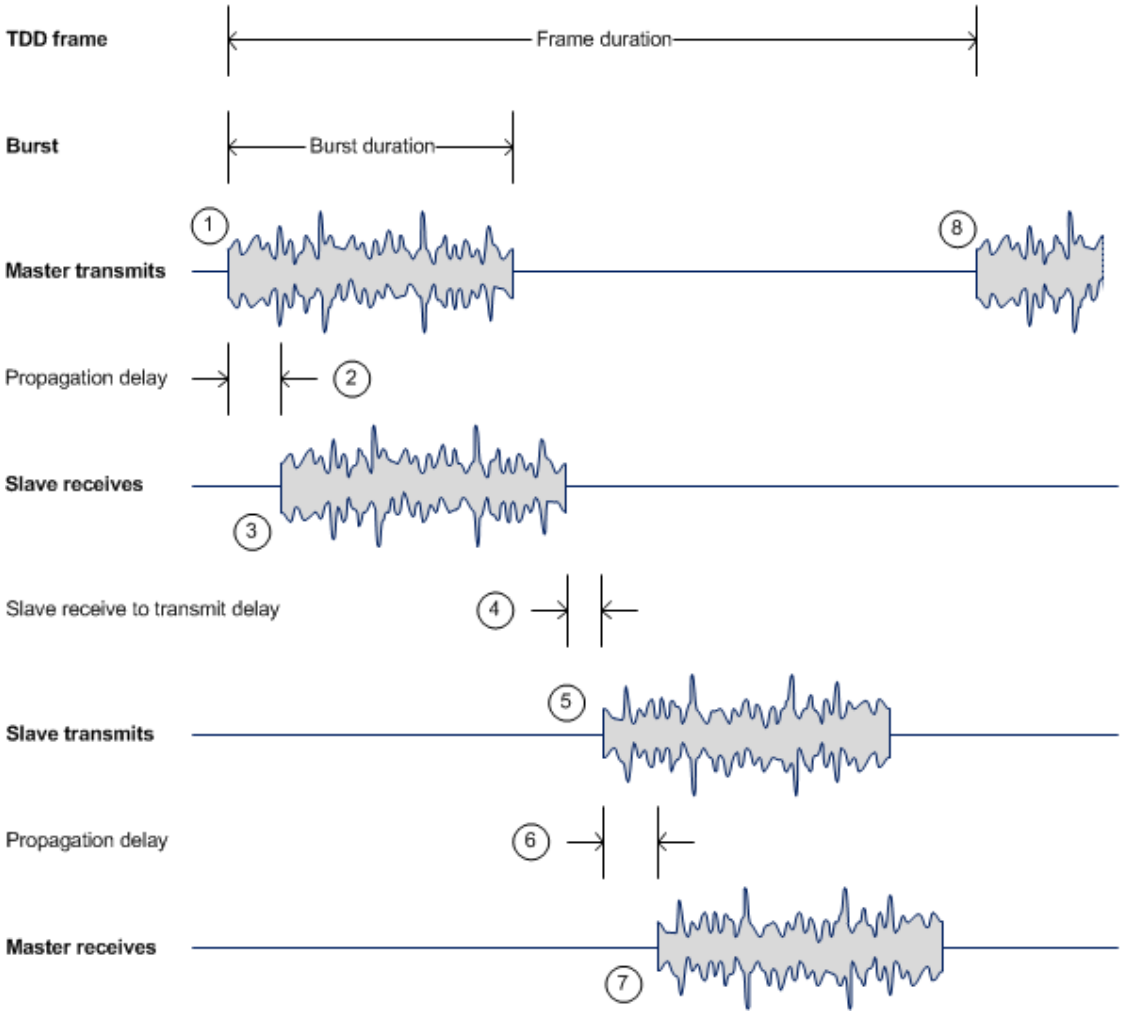

Further reading

For information about...	Refer to...
TDD synchronization in PTP networks	TDD synchronization on page 1-14

Link Scheduler

The PTP 550 series provides three configuration options for apportioning the available capacity between the two link directions.

- **75/50** – The capacity in the direction Master to Slave comprises 75% of available TDD frame, and the capacity in the direction of Slave to Master comprises 25% of available TDD frame.
- **50/50** (Symmetric)- The capacity in the direction Master to Slave comprises 50% of available TDD frame, and the capacity in the direction of Slave to Master comprises 50% of available TDD frame.
- **75/50** – The capacity in the direction Master to Slave comprises 25% of available TDD frame, and the capacity in the direction of Slave to Master comprises 75% of available TDD frame.

Further reading

For information about...	Refer to...
Link symmetry in synchronized networks	TDD synchronization on page 1-14

OFDM and channel bandwidth

The PTP 550 transmits in two channels using Orthogonal Frequency Division Multiplexing (OFDM). This wideband signal consists of many equally spaced sub-carriers. Although each sub carrier is modulated at a low rate using conventional modulation schemes, the resultant data rate from all the sub-carriers is high.

The channel bandwidth of the OFDM signal is 20 MHz, 40 MHz or 80 MHz, based on operator configuration.

Each channel is offset in center frequency from its neighboring channel by 5 MHz. PTP 550 supports 0 MHz channel separation / guard band between the two radio interfaces (0 MHz separation between the two operating band edges). PTP 550 does not allow operation with two overalapping channels.

Note

The Channel Bandwidth must be configured to the same value at both ends of the link for each channel. Not all channel bandwidths are available in all regulatory bands.

Further reading

For information about...	Refer to...
Channel bandwidths per frequency band	General wireless specifications on page 3-48
How to plan for channel bandwidth	Channel bandwidth on page 3-50
How to generate a license key for your country of operation	Generating license keys on page 6-3

Adaptive modulation

The PTP 550 can transport data over the wireless link using a number of different modulation modes ranging from 256-QAM to QPSK (selected independently between the two channels of operation). For a given channel bandwidth and TDD frame structure, each modulation mode transports data at a fixed rate. Also, the receiver requires a given signal to noise ratio in order to successfully demodulate a given modulation mode. Although the more complex modulations such as 256-QAM will transport data at a much higher rate than the less complex modulation modes, the receiver requires a much higher signal to noise ratio.

The PTP 550 provides an adaptive modulation scheme (on each channel in dual-channel operation) where the receiver constantly monitors the quality of the received signal and notifies the far end of the link of the optimum modulation mode with which to transmit. In this way, optimum capacity is achieved at all times.

Note

LINKPlanner includes an estimate of mean data rate, the data rate provided by each modulation and the percentage of time spent in each modulation mode.

Planning for adaptive modulation	Adaptive modulation on page 3-53
Effect of modulation mode on system threshold, output power and link loss	System threshold on page 3-61

MIMO

Multiple-Input Multiple-Output (MIMO) techniques provide protection against fading and increase the probability that the receiver will decode a usable signal. When the effects of MIMO are combined with those of OFDM techniques and a high link budget, there is a high probability of a robust connection over a non-line-of-sight path.

The PTP 550 transmits two signals on the same radio frequency, one of which is vertically polarized and the other horizontally polarized. Depending on the channel conditions, the PTP 550 will adapt between two modes of operation:

- **Dual Payload**: When the radio channel conditions allow, the PTP 550 will transmit two different and parallel data streams, one on the vertical channel and one on the horizontal channel. This doubles the capacity of the PTP 550.
- **Single Payload**: As the radio channel becomes more challenging, the PTP 550 has the ability to detect this and switch to a mode which transmits the same data stream on both vertical and horizontal channels. This provides polar diversity and is another key feature which allows the PTP 550 to operate in challenging non- line of sight radio channels.

Lower order modulations (BPSK 0.63 up to QPSK 0.87) only operate in single payload mode. Higher order modulations (16QAM 0.63 to 256QAM 0.81) are available in single payload mode and dual payload mode. The switching between modes is automatically controlled by the adaptive modulation feature described in Adaptive modulation on page 1-9.

Note

The system automatically chooses between dual and single payload to try to increase the capacity of a link.

Further reading

For information about...	Refer to...
Single and dual payload modulation modes	System threshold on page 3-61

Dynamic spectrum optimization

The PTP 550 series uses an interference mitigation technique known as Dynamic Spectrum Optimization (DSO). Both the Master and Slave continually monitor for interference on all channels and then select the best frequency of operation. This is a dynamic process where the PTP 550 can continually move channels in response to changes in interference.

Further reading

For information about...	Refer to...
Using DSO in PTP networks	Using Dynamic Spectrum Optimization on page 1-13
Planning to use DSO	Frequency selection on page 3-50
How to configure DSO	

Radar avoidance

In regions where protection of radars is part of the local regulations, the PTP 550 must detect interference from radar-like systems and avoid co-channel operation with these systems.

To meet this requirement, the PTP 550 implements the following features:

- The equipment can only transmit on available channels, of which there are none at initial power up. The radar detection algorithm will always scan a usable channel for 60 seconds for radar interference before making the channel an available channel.
- This compulsory channel scan will mean that there is at least 60 seconds service outage every time radar is detected and that the installation time is extended by at least 60 seconds even if there is found to be no radar on the channel

There is a secondary requirement for bands requiring radar avoidance. Regulators have mandated that products provide a uniform loading of the spectrum across all devices. In general, this prevents operation with fixed frequency allocations. However:

- ETSI regulations do allow frequency planning of networks (as that has the same effect of spreading the load across the spectrum).
- The FCC does allow channels to be avoided if there is actually interference on them.

Note

When operating in a region which requires DFS, ensure that the master device is configured with alternate frequencies and that the client device is configured to scan for these frequencies to avoid long outages.

Dual-channel Radar Avoidance

PTP 550 performs DFS detection and radar avoidance on each radio interface independently. The detect and avoid mechanisms of one radio interface do not affect the other radio interface.

Further reading

For information about...	Refer to...
Radar avoidance in the country of operation	License keys and regulatory bands on page 1-12
Planning for mandatory radar detection	Frequency selection on page 3-50

Encryption

The PTP 550 supports optional encryption for data transmitted over the wireless link. The encryption algorithm used is the Advanced Encryption Standard (AES) with 128-bit key size. AES is a symmetric encryption algorithm approved by U.S. Government organizations (and others) to protect sensitive information.

Further reading

For information about...	Refer to...
AES requirement for HTTPS/TLS	Transport layer security on page 1-19
How to configure AES encryption	

License keys and regulatory bands

The PTP 550 license key specifies the country of operation for the ODU, and lists the regulatory bands that are licensed by regulators in that country. If a license key provides access to more than one regulatory band, PTP 550 provides a choice between the available bands. In each regulatory band, PTP 550 sets the following aspects of wireless operation to comply with the applicable regulations:

- Maximum transmit power
- Radar avoidance
- Transmit power reduction in edge channels
- Frequency range
- Channel plan

The country of operation (and thus the supported regulatory bands) can be changed by generating a new license key at the License Key Generator page of the Cambium web-site, and entering the new license key using the device web management interface.

Dual-channel Conducted Transmit Power Constraints

The conducted transmission power of each PTP 550 radio complies with the following constraints:

- If both radios are configured in the same sub-band then the maximum transmit power of both radios is adjusted down to reduce 3rd-order harmonic interference:
    - For sub-bands 5.1, 5.2, 5.3, and 5.4 GHz the maximum configurable transmit power of each radio is reduced by 3 dBm
    - For sub-band 5.8 GHz, the maximum configurable transmit power of each radio is reduced by 6 dBm
- If the configured channel on either radio spans two neighboring sub-bands, then the maximum configurable transmit power of each radio complies to the most conservative sub-band.
- If the two radios are configured in non-neighboring sub-bands, then the maximum configurable transmit power on one or both radios may be reduced to reduce 3rd-order harmonic interference.

Caution

To avoid possible enforcement action by the country regulator, always operate links in accordance with local regulations.

Attention

Pour éviter une éventuelle sanction par le régulateur du pays, utiliser toujours nos liaisons radiofréquences conformément à la réglementation locale.

Further reading

For information about...	Refer to...
Planning PTP 550 links to conform to the regulatory band restrictions	Radio spectrum planning on page 3-48
Radio regulations in the country of operation	Compliance with radio regulations on page 4-120
How to generate a license key for the country of operation	Generating license keys on page 6-3

PTP networks

Using Dynamic Spectrum Optimization

The Dynamic Spectrum Optimization (DSO) feature allows a PTP 550 unit to select wireless channels for a lower level of radio frequency (RF) interference. This approach is appropriate where the network consists of a small number of PTP links, or where the RF interference is predominantly from equipment belonging to other operators.

Using frequency planning

Networks will benefit from the use of fixed channel allocations if (a) the network consists of multiple PTP links, and (b) RF interference predominantly arises from equipment in the same network.

Frequency planning is the exercise of assigning operating channels to PTP units so as to minimize RF interference between links. Frequency planning must consider interference from any PTP unit to any other PTP unit in the network. Low levels of interference normally allow for stable operation and high link capacity.

The frequency planning task is made more straightforward by use of the following techniques:

- Using several different channels
- Separating units located on the same mast
- Using high performance (directional) external antennas

Synchronized networks

TDD synchronization can be used to relax constraints on the frequency planning of PTP networks. Synchronization has the following benefits:

- Allows tighter frequency re-use, and thus wider channel bandwidth.
- Allows more convenient collocation of units on a single mast.
- Allows use of smaller or lower performance antennas.
- Reduces inference, resulting in use of more efficient modulation modes.

In a correctly designed synchronised network, all links are configured with the same TDD frame duration, and the TDD frame contains guard periods longer than the propagation delay between the most distant interfering units.

Each synchronized unit is assigned to one of two phases. A master ODU can be assigned to either phase. A slave ODU must be assigned to a different phase from the associated master ODU.

TDD synchronization eliminates RF interference between units in the same phase. This means that frequency planning in a synchronized network is concerned only with interference between units in different phases. Frequency planning is still necessary, but the number of potential interference paths to be considered is halved. Frequency planning in a synchronized TDD network has approximately the same level of complexity as frequency planning in a Frequency Division Duplex (FDD) network.

Further reading

For information about...	Refer to...
How to plan networks	Chapter 3: System planning, or contact your Cambium distributor or re-seller.

TDD synchronization

Additional hardware is needed to synchronize PTP 550 links. The PTP 550 link can be synchronized by the Cambium Networks CMM 5 module.

The CMM5 (Cluster Management Module) is the latest generation of solutions for the distribution of TDD Sync signals and Power-over-Ethernet (PoE) in the field.

Ethernet bridging

This section describes how the PTP 550 processes Ethernet data.

Ethernet ports

The PTP 550 Series ODU has two Ethernet ports:

- **Main PSU**: The Main PSU port provides a copper Ethernet interface for 100BASE-TX and 1000BASE-T, and accepts power from the AC+DC Enhanced Power Injector or the AC Power Injector to the ODU (802.3at).
- **SFP:** The SFP port is a small format pluggable receptacle accepting copper or optical plug-in modules supplied as part of the SFP module kit.

Data network

Transparent Ethernet service

The PTP 550 Series provides an Ethernet service between one of the Ethernet ports at a local ODU and one of the Ethernet ports at an associated remote ODU.

The service is transparent to untagged frames, standard VLAN frames, priority-tagged frames, provider bridged frames, and provider backbone bridged frames. In each case, the service preserves MAC addresses, VLAN ID, Ethernet priority and Ethernet payload in the forwarded frame. The maximum frame size for bridged frames in the customer network is 9600 bytes.

Layer two control protocols

The Data Service in the PTP 550 Series is transparent to layer two control protocols (L2CP) including:

- Spanning tree protocol (STP), rapid spanning tree protocol (RSTP)
- Multiple spanning tree protocol (MSTP)
- Link aggregation control protocol (LACP)
- Link OAM, IEEE 802.3ah
- Port authentication, IEEE 802.1X
- Ethernet local management interface (E-LMI), ITU-T Q.933.
- Link layer discovery protocol (LLDP)
- Multiple registration protocol (MRP)
- Generic attribute registration protocol (GARP)

The PTP 550 Series does not generate or respond to any L2CP traffic.

Quality of service for bridged Ethernet traffic

PTP 550 supports three QoS priority levels using air fairness, priority-based starvation avoidance scheduling algorithm.

Ordering of traffic amongst the priority levels is based on a percentage of total link throughput. In other words, all priorities receive some throughput so that low priority traffic is not starved from transmission. In effect, the greatest amount of throughput is guaranteed to the VOIP priority level, then High, then Low.

Priority Level	Traffic Priority Label
Highest Priority	VOIP (only utilized when **VOIP Enable** is set to **Enabled**)
Medium Priority	High
Lowest Priority	Low

By default, all traffic passed over the air interface is low priority. The Quality of Service page may be utilized to map traffic to certain priority levels using QoS classification rules. The rules included in the table are enforced starting with the first row of the table.

Caution

Each additional traffic classification rule increases device CPU utilization. Careful network traffic planning is required to efficiently use the device processor.

PTP 550 also supports radio data rate limiting (Maximum Information Rate, or MIR) based on the configuration of the MIR table. Operators may add up to 16 MIR profiles on the master ODU, each with unique limits for uplink and downlink data rates. The slave ODU field **MIR Profile Setting** is used to configure the appropriate MIR profile for limiting the slave ODU's data rate.

Protocol model

Ethernet bridging behavior at each end of the wireless link is equivalent to a two-port, managed, transparent MAC bridge.

Frames are transmitted at the Wireless port over a proprietary point-to-point circuit-mode link layer between ends of the PTP 550 link.

Ethernet frames received at the Ethernet ports, or generated internally within the management agent, are encapsulated within a lightweight MAC layer for transmission over the wireless link.

System management

This section introduces the PTP 550 management system, including the web interface, installation, configuration, alerts and upgrades.

Management agent

PTP 550 equipment is managed through an embedded management agent. Management workstations, network management systems or PCs can be connected to this agent using an in-band network management mode. These modes are described in detail in Network management on page 1-18.

The management agent includes a dual IPv4/IPv6 interface at the management agent. The IP interface operates in the following modes:

- IPv4 only (default)
- IPv6 only
- Dual IPv4/IPv6

In the dual IPv4/IPv6 mode, the IP interface is configured with an IPv4 address and an IPv6 address and can operate using both IP versions concurrently. This dual mode of operation is useful when a network is evolving from IPv4 to IPv6.

The management agent supports the following application layer protocols (regardless of the management agent IP mode):

- Hypertext transfer protocol (HTTP)
- HTTP over transport layer security (HTTPS/TLS)
- RADIUS authentication
- TELNET
- Simple network management protocol (SNMP)
- Network time protocol (NTP)
- System logging (syslog)

Network management

IPv4 and IPv6 interfaces

The PTP 550 ODU contains an embedded management agent with IPv4 and IPv6 interfaces. Network management communication is exclusively based on IP and associated higher layer transport and application protocols. The default IPv4 address of the management agent is 169.254.1.1. There is no default IPv6 address. The PTP 550 does not require use of supplementary serial interfaces.

MAC address

The management agent end-station MAC address is recorded on the enclosure and is displayed on the Status web page. The MAC address is not configurable by the user.

VLAN membership

The management agent can be configured to transmit and receive frames of one of the following types: untagged, priority-tagged, C-tagged (IEEE 802.1Q) or S-tagged (IEEE 802.1ad). C-tagged and S-tagged frames must be single tagged. The VLAN ID can be 0 (priority tagged) or in the range 1 to 4094.

Access to the management agent

The management agent can be reached from any Ethernet port at the local ODU.

Management frames are processed by the management agent if (a) the destination MAC address in the frame matches the ODU MAC address, and (b) the VLAN ID in the frame matches the VLAN configuration of the management agent.

MAC address and IP address of the management agent

The management agent does not provide the function of a dual-homed or multi-homed host. Network designers should take care to ensure that the ODU will not be connected to more than one IP network.

Web server

The PTP 550 management agent contains a web server. The web server supports the HTTP and HTTPS/TLS interfaces.

Web-based management offers a convenient way to manage the PTP 550 equipment from a locally connected computer or from a network management workstation connected through a management network, without requiring any special management software. The web-based interfaces are the only interfaces supported for installation of PTP 550.

Web pages

The web-based management interfaces provide comprehensive web-based fault, configuration, performance and security management functions organized into the following web-pages and groups:

- **Status:** The Status web-page reports the detailed status of the PTP 550.

- **Installation:** The Installation web-page is used to monitor installation-specific configuration and status parameters.
- **Configuration:** These web-pages are used to configure the radio, system, network, and security parameters.
- **Monitor:** The Monitor web-page provides detailed reports of system performance and configured parameters, a throughput chart, and a system log.
- **Tools:** The tools webpage includes software to aid in software upgrade, backup/restore, spectrum analysis, alignment, link testing, and networking testing.

Transport layer security

The HTTPS/TLS interface provides the same set of web-pages as the HTTP interface, but allows HTTP traffic to be encrypted using Transport Layer Security (TLS). PTP 550 uses AES encryption for HTTPS/TLS.

Identity-based user accounts

The PTP 550 web-based interface provides the following method of authenticating users:

- Role-based user authentication allows the user, on entry of a valid password, to access all configuration capabilities and controls.

SNMP control of passwords

PTP 550 allows the role-based passwords for the web-based interface to be updated using the proprietary SNMP MIB.

SNMP Control of Passwords can be used together with SNMPv3 to provide a secure means to update passwords from a central network manager. However, password complexity rules are not applied.

Further reading

For information about…	Refer to…
How to log in and use the menu	Using the web interface on page 6-6
Planning the security material needed for HTTPS/TLS.	Security planning on page 3-60
How to configure user accounts	

RADIUS authentication

PTP 550 supports remote authentication for users of the web interface using the Remote Authentication Dial-In User Service (RADIUS) with one of the following authentication method:

- Microsoft CHAP Version 2 (MS-CHAPv2)

The RADIUS interface is configured through the RADIUS Authentication page of the web-based interfaces.

Remote authentication can be used in addition to local authentication, or can be used as a replacement for local authentication. If remote and local authentications are used together, PTP 550 authenticates users based on the device configuration.

Further reading

For information about...	Refer to...
How to plan the use of RADIUS	
How to configure RADIUS.	

SNMP

The management agent supports fault and performance management by means of an SNMP interface. The management agent is compatible with SNMP v2c using one Management Information Base (MIB) file which is available for download from the Cambium Networks Support website http:

Further reading

For information about...	Refer to...
How to plan for SNMPv2c	Planning for SNMP operation on page 3-59
How to configure SNMPv2c	

Network Time Protocol (NTP)

The clock supplies accurate date and time information to the system. It can be set to run with or without a connection to a network time server (NTP). It can be configured to display local time by setting the time zone on the System web page.

Further reading

For information about...	Refer to...
How to plan for NTP operation	Planning for NTP operation on page 3-60
How to configure NTP	

System logging (syslog)

PTP 550 supports the standard syslog protocol to log important configuration changes, status changes and events.

PTP 550 creates syslog messages for configuration changes to any attribute that is accessible via the web-based interface, or via the enterprise MIB at the SNMP interface.

PTP 550 additionally creates syslog messages for changes in any status variable displayed in the web-based interface.

PTP 550 creates syslog messages on a number of events (for example successful and unsuccessful attempts to log in to the web-based interface).

PTP 550 can be configured to send syslog messages to up to four standard syslog servers.

Additionally, PTP 550 logs event notification messages locally. Locally-stored event messages survive reboot of the unit, and are overwritten only when the storage capacity is exhausted (approximately 2000 messages). The locally stored events can be reviewed using the web-based user interface.

Further reading

For information about...	Refer to...
Configuring system logging	
Syslog alarms	
How to view the local log of event messages	
How to interpret syslog messages	

Software upgrade

The management agent supports application software upgrade using either the web-based interface, the SNMP interface, or cnMaestro management software.

PTP 550 software images are digitally signed, and the ODU will accept only images that contain a valid Cambium Networks digital signature. The ODU always requires a reboot to complete a software upgrade.

Note

Obtain the application software and this user guide from the support website BEFORE warranty expires.

Caution

ODU software version must be the same at both ends of the link. Limited operation may sometimes be possible with dissimilar software versions, but such operation is not supported by Cambium Networks.

Caution

Take care when upgrading ODU software using the wireless link to a remote ODU. Upgrade the remote unit first, reboot the remote ODU, and then upgrade the local unit to the same software version.

Further reading

For information about...	Refer to...
How to upgrade the software using the web interface	

Chapter 2: System hardware

This chapter describes the hardware components of a PTP 550 link.

The following topics are described in this chapter:

- Outdoor unit (ODU) on page 2-2
- Power supply units (PSU) on page 2-9
- Antennas and antenna cabling on page 2-14
- Ethernet cabling on page 2-25

Outdoor unit (ODU)

ODU description

One ODU is required for each link end. The ODU is a self-contained transceiver unit that houses both radio and networking electronics.

Hardware platform variants

PTP 550 ODUs are available in two different hardware platform variants:

- PTP 550 Integrated ODU
- PTP 550 Connectorized ODU

Regional variants

Each of the PTP 550 hardware platform variants is available in three different regional variants.

The regional variants are supplied with default country licenses as follows:

- FCC/IC: "USA" country license with regulatory bands:
  - 1 – 5.8 GHz
  - 9 – 5.4 GHz
  - 14 – 4.9 GHz Public Safety
  - 38 – 5.2 GHz
  - 84 – 5.1 GHz
  - 90 – 5.4 GHz (Parabolic Antenna)
  - 91 – 5.2 GHz (Parabolic Antenna)
  - 92 – 5.1 GHz (Parabolic Antenna)
- RoW: "Other" country license with regulatory bands:
  - 8 – 5.4 GHz
  - 16 – 5.9 GHz
  - 35 – 5.8 GHz
  - 61 – 4.9 GHz
  - 62 – 5.2 GHz
- EU: "EU" country license with regulatory band:
  - 26 – 5.4 GHz

For details of how to configure the ODUs to operate with other country licenses, refer to Generating license keys on page 6-3. The list of available countries depends upon the regional variant. The list of available regulatory bands depends on the country.

PTP 550 Integrated ODU

The PTP 550 Integrated ODU is attached to a 23 dBi flat plate antenna (Figure 3) and is intended for medium to long-range difficult links and traditional backhaul requirements where high capacity and high link budget are required.

Figure 3 PTP 550 Integrated ODU (front and rear views)

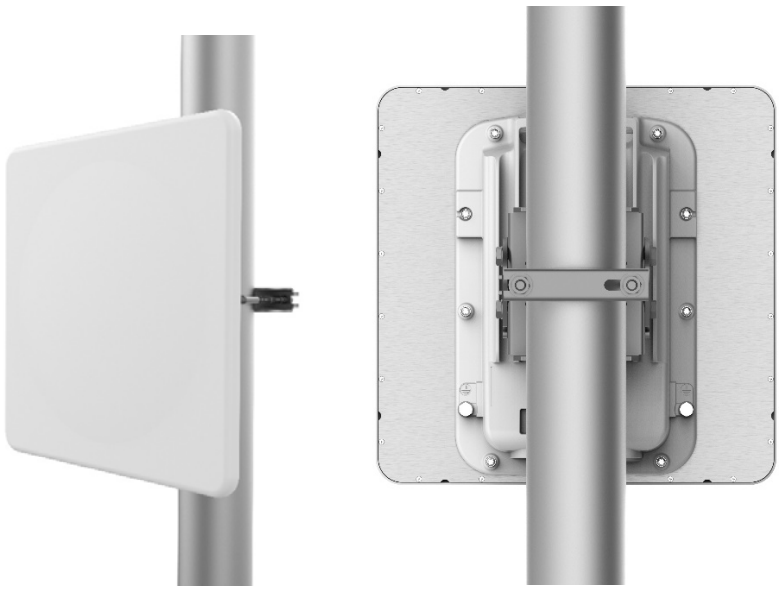

Individual ODU part numbers

Order PTP 550 Integrated ODUs from Cambium Networks (Table 2). Each of the parts listed in Table 2 includes the following items:

- One 23 dBi integrated ODU

Integrated ODUs, when sold individually, are supplied without mounting brackets.

Table 2 PTP 550 Integrated ODU part numbers

Cambium description	Cambium part number
PTP 550 (4.9 to 6.05 GHz) Integrated ODU (FCC/IC)	C050065B001
PTP 550 (4.9 to 6.05 GHz) Integrated ODU (RoW)	C050065B003
PTP 550 (4.9 to 6.05 GHz) Integrated ODU (EU)	C050065B005

ODU kit part numbers

Order PTP 550 Integrated ODU kits from Cambium Networks (Table 3).

Each of the parts listed in Table 3 includes the following items:

- One 23 dBi integrated ODU
- One PSU of the type stated in the Cambium description.
- Mounting bracket

- One line cord, either US (FCC/IC) or EU (EU and RoW).

Table 3 ODU kit part numbers for Integrated ODUs

Cambium description	Cambium part number
PTP 550 Integrated 5 GHz (FCC) with US Line Cord	C050055H007A
PTP 550 Integrated 5 GHz (IC) with US Line Cord	C050055H008A
PTP 550 Integrated 5 GHz (EU) with EU Line Cord	C050055H009A
PTP 550 Integrated 5 GHz (ROW) with US Line Cord	C050055H010A
PTP 550 Integrated 5 GHz (ROW) with EU Line Cord	C050055H011A
PTP 550 Integrated 5 GHz (ROW) with No Line Cord	C050055H012A

PTP 550 Connectorized ODU

The PTP 550 Connectorized ODU is intended to work with separately mounted external antennas (Figure 4) in long-range difficult links and traditional backhaul requirements where high capacity and high link budget are required. External antennas generally have higher gains than the integrated antennas, allowing the PTP 550 to cope with more difficult radio conditions.

Figure 4 PTP 550 Connectorized ODU (front and rear views)

Note

To determine when to install connectorized units and to calculate their impact on link performance and regulatory limits, see Planning for connectorized units on page 3-54.

To select antennas, RF cables and connectors for connectorized units, see Antennas and antenna cabling on page 2-14.

Attention

Pour déterminer si il est nécessaire d'installer une liaison radiofréquence avec des antennes externes et pour calculer leur impact sur les performances de la liaison et les limites réglementaires, voir Planning for connectorized units page 3-54.

Pour sélectionner les antennes, câbles et connecteurs RF pour les liaisons radiofréquence sans antenne intégrée, voir Antennas and antenna cabling page 2-14.

ODU kit part numbers

Order PTP 550 Connectorized ODU kits from Cambium Networks (Table 4).

Each of the parts listed in Table 4 includes the following items:

- One Connectorized ODU
- One ODU mounting bracket
- One PSU of the type stated in the Cambium description.
- One line cord, either US (FCC/IC) or EU (EU and RoW).

Table 4 ODU kit part numbers for Connectorized ODUs

Cambium description	Cambium part number
PTP 550 Connectorized 5 GHz (FCC) with US Line Cord	C050055H001A
PTP 550 Connectorized 5 GHz (IC) with US Line Cord	C050055H002A
PTP 550 Connectorized 5 GHz (EU) with EU Line Cord	C050055H003A
PTP 550 Connectorized 5 GHz (ROW) with US Line Cord	C050055H004A
PTP 550 Connectorized 5 GHz (ROW) with EU Line Cord	C050055H005A
PTP 550 Connectorized 5 GHz (ROW) with No Line Cord	C050055H006A

ODU accessories

Spare ODU port blanking plugs are available from Cambium Networks (Table 5).

Table 5 ODU accessory part numbers

Cambium description	Cambium part number
Blanking Plug Pack (Qty 10)	N000065L036

Mounting bracket

PTP 550 supports below mentioned mounting bracket option:

Table 6 PTP 550 ODU mounting bracket part numbers

Bracket	Pole diameter	ODU variants	Bracket part number
Low profile bracket	40 mm to 82 mm (1.6 inches to 3.2 inches)	PTP 550 Integrated PTP 550 Connectorized	N000045L002A

The low profile bracket provides elevation adjustment of +10° to –5° or +5° to –10°.

If separate ODU mounting brackets are required, order them from Cambium Networks.

Figure 5 ODU low profile bracket

ODU interfaces

The PSU and SFP ports are on the rear of the integrated and connectorized ODUs (Figure 6). These interfaces are described in Table 7.

Figure 6 ODU rear interfaces

SFP Main PSU

Table 7 ODU rear interfaces

Port name	Connector	Interface	Description
Main PSU	RJ45	POE input	802.3at Power over Ethernet (POE).
		100/1000BASE-T Ethernet	Management and/or data.
SFP	SFP	Optical or Copper Gigabit Ethernet	Data and Management Services. Plug-in SFP module must be purchased separately.

The front of the connectorized ODU (Figure 7) provides N type female connectors for RF cable interfaces to antennas with horizontal (H) and vertical (V) polarization.

Figure 7 Connectorized ODU antenna interfaces

ODU specifications

The PTP 550 ODU conforms to the specifications listed in Table 8.

Table 8 ODU specifications

Category	Specification
Dimensions	23 dBi integrated: 305 mm (12.0 in) x 305 mm (12.0 in) x 68 mm (2.2 in) Connectorized: 278 mm (11.0 in) x 185 mm (7 in) x 88 mm (3.5 in)
Weight	23 dBi integrated: 2.2 Kg (4.85 lbs) including bracket Connectorized: 1.6 Kg (3.5 lbs) including bracket
Temperature	-40°C (-40°F) to +60°C (140°F), including solar radiation
Wind loading	200 mph (323 kph) maximum. See ODU wind loading on page 3-42.
Humidity	100% condensing
Liquid and particle ingress	IP66, IP67
Static discharge	See Electromagnetic compatibility (EMC) compliance on page 4-115

Power supply units (PSU)

PSU description

The PSU is an indoor unit that is connected to the ODU and network terminating equipment using Cat5e cable with RJ45 connectors. It is also plugged into an AC or DC power supply so that it can inject Power over Ethernet (POE) into the ODU. Choose one of the following PSUs (Figure 8):

- The AC Power Injector (left) accepts an AC input supply only.
- The AC+DC Enhanced Power Injector (right) accepts both AC and DC input and tolerates a greater temperature range.

Figure 8 PTP 550 PSUs

Warning

Always use an appropriately rated and approved AC supply cord-set in accordance with the regulations of the country of use.

Caution

The PSU ODU ports are designed to connect only to PTP 550 ODUs or LPUs. Do not connect any other equipment, as damage may occur.

Do not connect the PIDU Plus PTP 300/500/600 Series to the PTP 550 ODU or LPU.

Note

Each of the ODU kits listed in Table 3 and Table 4 includes one PSU and one US or EU line cord as stated in the Cambium description.

PSU part numbers

Order PSUs and (for AC power) line cords from Cambium Networks (Table 9).

Table 9 Power supply component part numbers

Cambium description	Cambium part number
PTP 550 AC Power Injector	N000000L034A
AC+DC Enhanced Power Injector	C000065L002
CABLE, UL POWER SUPPLY CORD SET, 720mm, US	N000900L031A
CABLE, UL POWER SUPPLY CORD SET, 720mm, EU	N000900L032A

AC Power Injector interfaces

The AC Power Injector interfaces are shown in Figure 9 and described in Table 10.

Figure 9 AC Power Injector interfaces

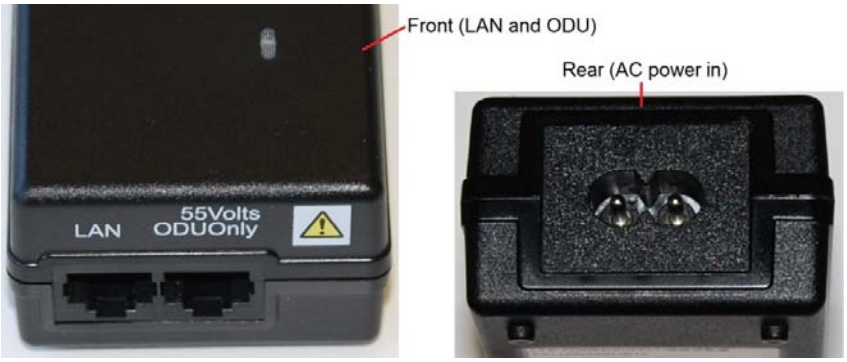

Table 10 AC Power Injector interface functions

Interface	Function
AC power in	AC power input (main supply).
ODU	RJ45 socket for connecting Cat5e cable to ODU.
LAN	RJ45 socket for connecting Cat5e cable to network.
Power (green) LED	Power supply detection

AC+DC Enhanced Power Injector interfaces

The AC+DC Enhanced Power Injector interfaces are shown in Figure 10 and described in Table 11.

Figure 10 AC+DC Enhanced Power Injector interfaces

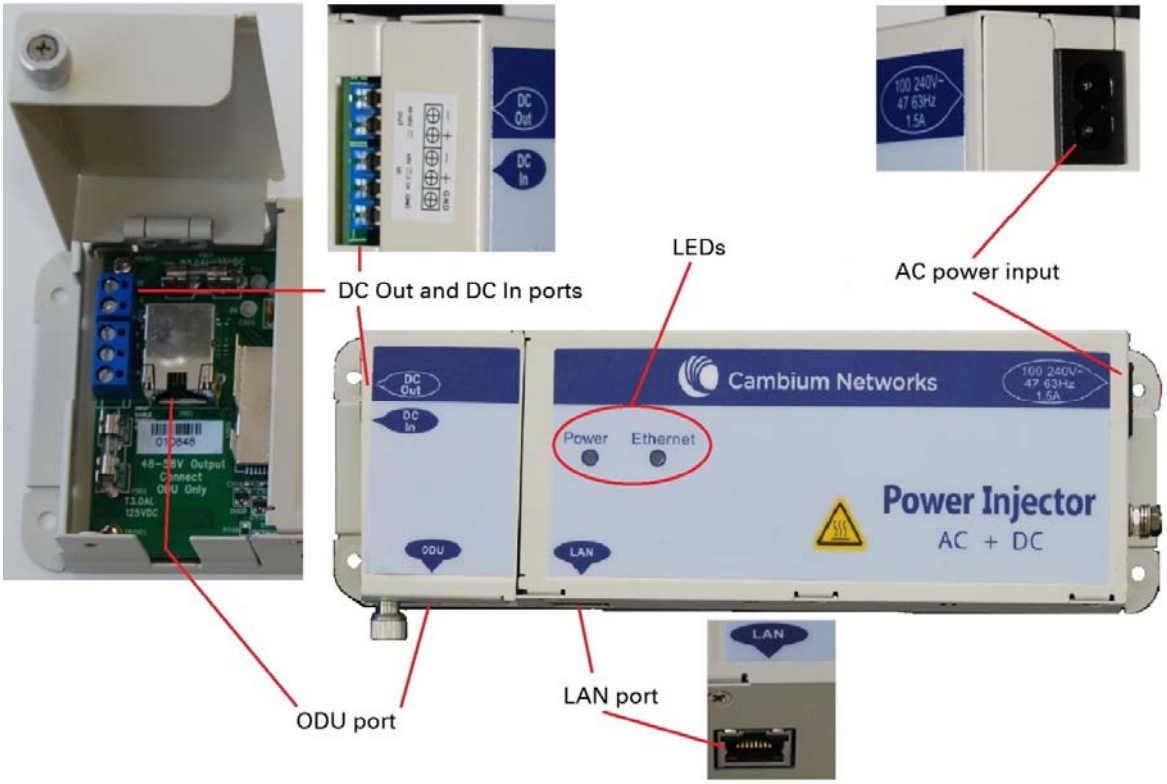

Table 11 AC+DC Enhanced Power Injector interface functions

Interface	Function
100-240V 47-63Hz 1.5A	AC power input (main supply).
DC In	Alternative DC power supply input.
DC Out	DC power output to a second PSU (for power supply redundancy).
ODU	RJ45 socket for connecting Cat5e cable to ODU.
LAN	RJ45 socket for connecting Cat5e cable to network.
Power (green) LED	Power supply detection
Ethernet (yellow) LED	Ethernet traffic detection

PSU specifications

The PTP 550 AC Power Injector conforms to the specifications listed in Table 12.

The AC+DC Enhanced Power Injector conforms to the specifications listed in Table 13.

Table 12 AC Power Injector specifications

Category	Specification
Dimensions	137 mm (5.4 in) x 56 mm (2.2 in) x 38 mm (1.5 in)
Weight	0.240 Kg (0.5 lbs)
Temperature	0°C to +40°C
Humidity	90% non-condensing
Waterproofing	Not waterproof
Altitude	Sea level to 5000 meters (16000 ft)
AC Input	Min 90 V AC, 57 – 63 Hz, max 264 V AC, 47 – 53 Hz.
DC output voltage to the ODU	55V +/- 5%
AC connector	IEC-320-C8
Efficiency	Better than 85%, efficiency level 'V'
Over Current Protection	Hiccup current limiting, trip point set between 120% to 150% of full load current
Hold up time	At least 10 milliseconds

Table 13 AC+DC Enhanced Power Injector specifications

Category	Specification
Dimensions	250 mm (9.75 in) x 40 mm (1.5 in) x 80 mm (3 in)
Weight	0.864 Kg (1.9 lbs)
Temperature	-40°C (-40°F) to +60°C (140°F)
Humidity	0 to 90% non-condensing
Waterproofing	Not waterproof
AC Input	90-264 V AC, 47-60 Hz
Alternative DC Input	37-60 V DC
DC Output Voltage	For mains input: 58 V, +2V, -0V For DC input: Output voltage at maximum rated output current, not more than 1.5 V below the DC input voltage. Maximum length of DC output cable: 3 meters.
AC Input connector	IEC-320-C8
DC Output current	1.7A
Efficiency	Better than 84%
Over Current Protection	Hiccup current limiting, trip point set between 120% to 150% of full load current
Hold up time	At least 20 milliseconds
Power factor	Better than 0.9

Antennas and antenna cabling

Antenna requirements

Each connectorized ODU requires one external antenna (normally dual-polar). These antennas are not supplied by Cambium Networks.

For connectorized units operating in the USA or Canada 4.9 GHz, 5.1 GHz, 5.2 GHz, 5.4 GHz or 5.8 GHz bands, choose external antennas from those listed in FCC and IC approved antennas on page 2-15. Do not install any other antennas. For links in other countries, the listed antennas are advisory, not mandatory.

Note

To determine when to install connectorized units and to calculate their impact on link performance and regulatory limits, see Planning for connectorized units on page 3-54.

RF cable and connectors

RF cable of generic type LMR-400 is required for connecting the ODU to the antenna. N type male connectors are required for connecting the RF cables to the connectorized ODU. Two connectors are required per ODU. Use weatherproof connectors, preferably ones that are supplied with adhesive lined heat shrink sleeves that are fitted over the interface between the cable and connector. Order CNT-400 RF cable and N type male connectors from Cambium Networks (Table 14).

Table 14 RF cable and connector part numbers

Cambium description	Cambium part number
50 Ohm Braided Coaxial Cable - 75 meter	30010194001
50 Ohm Braided Coaxial Cable - 500 meter	30010195001
RF Connector, N, Male, Straight for CNT-400 Cable	09010091001

Note

To select the correct connectors for the antenna end of the RF cable, refer to the antenna manufacturer's instructions.

Antenna accessories

Connectorized ODUs require the following additional components:

- Cable grounding kits: Order one cable grounding kit for each grounding point on the antenna cables. Refer to Lightning protection unit (LPU) and grounding kit on page 2-28 for specifications and part numbers.
- Self-amalgamating and PVC tape: Order these items to weatherproof the RF connectors.
- Lightning arrestors: When the connectorized ODU is mounted indoors, lightning arrestors (not PTP 550 LPUs) are required for protecting the antenna RF cables at building entry. One arrestor is required per antenna cable. One example of a compatible lightning arrestor is the Polyphaser LSXL-ME or LSXL (not supplied by Cambium Networks).

FCC and IC approved antennas

For connectorized units operating in the USA or Canada, choose external antennas from Table 15 (5.1 GHz – USA only), Table 16 (5.2 GHz), Table 17 (5.4 GHz) or Table 18 (5.8 GHz). These are approved by the FCC for use with the product and are constrained by the following limits for single- or dual-polarization parabolic dish antennas:

- 5.1 GHz – 34.5 dBi per polarization or antenna.
- 5.2 GHz – 34.9 dBi per polarization or antenna.
- 5.4 GHz – 34.9 dBi per polarization or antenna.
- 5.8 GHz – 37.7 dBi per polarization or antenna.

Details of the regulatory bands are provided in Table 32 on page 3-49.

Caution

Antennas not included in these tables are strictly prohibited for use with the PTP 550 in the specified bands.

Caution

This radio transmitter (IC certification number 109AO-50650) has been approved by Industry Canada to operate with the antenna types listed below with the maximum permissible gain and required antenna impedance for each antenna type indicated. Antenna types not included in this list, having a gain greater than the maximum gain indicated for that type, are strictly prohibited for use with this device.

Antennes approuvées par la FCC et IC

Pour les unités sans antenne intégrée destinées aux Etats-Unis ou au Canada, choisissez des antennes externes dans la Table 15 (5.1 GHz – Etats-Unis), Table 16 (5.2 GHz), Table 17 (5.4 GHz) ou la Table 18 (5.8 GHz). Celles-ci sont approuvées par la FCC pour une utilisation avec le produit et sont limitées pour les antennes paraboliques a polarisation simple ou double comme suit:

- 4.9 GHz – 36.0 dBi par polarisation ou l'antenne.
- 5.1 GHz – 34.5 dBi par polarisation ou l'antenne.
- 5.2 GHz – 34.9 dBi par polarisation ou l'antenne.
- 5.4 GHz – 34.9 dBi par polarisation ou l'antenne.
- 5.8 GHz – 37.7 dBi par polarisation ou l'antenne.

Attention

Les antennes qui ne sont pas listées dans ces tableaux sont strictement interdites d'utilisation avec le PTP 550 dans les bandes spécifiées

Attention

Le présent émetteur radio (Numéro de certification IC 109AO-50650) a été approuvé par Industrie Canada pour fonctionner avec les types d'antenne énumérés ci-dessous et ayant un gain admissible maximal et l'impédance requise pour chaque type d'antenne. Les types d'antenne non inclus dans cette liste, ou dont le gain est supérieur au gain maximal indiqué, sont strictement interdits pour l'exploitation de l'émetteur.

Table 15 Antennas permitted for deployment in USA only – 5.1 GHz

Manufacturer	Antenna type	Nominal gain (dBi)	Parabolic dish	Cambium part number
Andrew	4-foot Dual-Pol Parabolic, PX4F-52	34.5	Y	RDG4453B
Andrew	4-foot Parabolic, P4F-52	34.5	Y	RDH4524A
Gabriel	4-foot Standard QuickFire Parabolic, QF4-52-N	34.4	Y	
Gabriel	4-foot Standard QuickFire Parabolic, QF4-52-N-RK	34.4	Y	
Radio Waves	4-foot Parabolic, SP4-5.2	34.4	Y	
Gabriel	4-foot Standard Dual QuickFire Parabolic, QFD4-52-N	34.3	Y	
Gabriel	4-foot Standard Dual QuickFire Parabolic, QFD4-52-N-RK	34.3	Y	
Radio Waves	4-foot Dual-Pol Parabolic, HPD4-5.2NS	34.3	Y	RDH4510B

Manufacturer	Antenna type	Nominal gain (dBi)	Parabolic dish	Cambium part number
Gabriel	4-foot High Performance QuickFire Parabolic, HQF4-52-N	34	Y	
Radio Waves	4-foot Dual-Pol Parabolic, SPD4-5.2	34	Y	RDH4505B
Gabriel	4-foot High Performance Dual QuickFire Parabolic, HQFD4-52-N	33.9	Y	
RFS	4-foot HP Parabolic, SDF4-52AN	33.5	Y	
RFS	4-foot Parabolic, SPF4-52AN	33.5	Y	
Andrew	3-foot Dual-Pol Parabolic, PX3F-52	33	Y	
Andrew	3-foot Parabolic, P3F-52	33	Y	
Stella Doradus	4-foot Single-Pol, 56 PSD113	32	Y	
Radio Waves	3-foot Dual-Pol Parabolic, HPD3-5.2NS	31.9	Y	RDH4509B
Radio Waves	3-foot Parabolic, SP3-5.2	31	Y	RDH4513B
Gabriel	2.5-foot Standard QuickFire Parabolic, QF2.5-52-N	30.8	Y	
Gabriel	2.5-foot Standard Dual QuickFire Parabolic, QFD2.5-52-N	30.7	Y	
Radio Waves	3-foot Dual-Pol Parabolic, SPD3-5.2	30.7	Y	RDH4504B
Andrew	2-foot Dual-Pol Parabolic, PX2F-52	29	Y	
Andrew	2-foot Parabolic, P2F-52	29	Y	
MTI	3-foot Single-Pol, MT-487000/N	28.6	Y	
Radio Waves	2-foot Parabolic, SP2-5.2	28.6	Y	
Radio Waves	2-foot Dual-Pol Parabolic, HPD2-5.2NS	28.4	Y	RDH4508B
Gabriel	2-foot Standard QuickFire Parabolic, QF2-52-N	28.1	Y	
Gabriel	2-foot Standard QuickFire Parabolic, QF2-52-N-RK	28.1	Y	
MTI	2-foot Dual-Pol, MT-486013/N	28.1	Y	
MTI	2-foot Single-Pol, MT-466009/N	28.1	Y	
Gabriel	2-foot Standard Dual QuickFire Parabolic, QFD2-52-N	28	Y	
Gabriel	2-foot Standard Dual QuickFire Parabolic, QFD2-52-N-RK	28	Y	
Gabriel	2-foot High Performance QuickFire Parabolic, HQF2-52-N	27.8	Y	

Manufacturer	Antenna type	Nominal gain (dBi)	Parabolic dish	Cambium part number
Gabriel	2-foot High Performance Dual QuickFire Parabolic, HQFD2-52-N	27.7	Y	
Radio Waves	2-foot Dual-Pol Parabolic, SPD2-5.2	27.7	Y	RDH4503B
RFS	2-foot Parabolic, SPF2-52AN	27.5	Y	
Stella Doradus	2-foot Single-Pol, 56 PSD61	26.6	Y	
MARS	MA-WS54-50R Flat Plate (Dual-Pol)	23	N	Integrated
MTI	15 inch Dual-Pol Flat Panel, MT-485025/NVH	23	N	
Andrew	1.25-foot Flat Panel Dual, UBXP375-4-1	20.6	N	
Andrew	1-foot Flat Panel Single, UBP300-4-1	20.6	N	
MARS	Small Form Factor Flat Plate Antenna Part # MA-EM56-DP19CM.	19	N	Integrated
Laird	60 Sectorized (Dual-Pol)	17	N	
Laird	90 Sectorized (Dual-Pol)	17	N	
KPPA	OMNI (Dual-Pol)	13	N	

Table 16 Antennas permitted for deployment in USA/Canada – 5.2 GHz

Manufacturer	Antenna type	Nominal gain (dBi)	Parabolic dish	Cambium part number
Andrew	4-foot Dual-Pol Parabolic, PX4F-52	34.9	Y	RDG4453B
Andrew	4-foot Parabolic, P4F-52	34.9	Y	RDH4524A
Gabriel	4-foot Standard QuickFire Parabolic, QF4-52-N	34.8	Y	
Gabriel	4-foot Standard QuickFire Parabolic, QF4-52-N-RK	34.8	Y	
Radio Waves	4-foot Parabolic, SP4-5.2	34.8	Y	
Gabriel	4-foot Standard Dual QuickFire Parabolic, QFD4-52-N	34.7	Y	
Gabriel	4-foot Standard Dual QuickFire Parabolic, QFD4-52-N-RK	34.7	Y	
Radio Waves	4-foot Dual-Pol Parabolic, HPD4-5.2NS	34.7	Y	RDH4510B
Gabriel	4-foot High Performance QuickFire Parabolic, HQF4-52-N	34.4	Y	
Radio Waves	4-foot Dual-Pol Parabolic, SPD4-5.2	34.4	Y	RDH4505B

Manufacturer	Antenna type	Nominal gain (dBi)	Parabolic dish	Cambium part number
Gabriel	4-foot High Performance Dual QuickFire Parabolic, HQFD4-52-N	34.3	Y	
RFS	4-foot HP Parabolic, SDF4-52AN	33.9	Y	
RFS	4-foot Parabolic, SPF4-52AN	33.9	Y	
Andrew	3-foot Dual-Pol Parabolic, PX3F-52	33.4	Y	
Andrew	3-foot Parabolic, P3F-52	33.4	Y	
Stella Doradus	4-foot Single-Pol, 56 PSD113	32.4	Y	
Radio Waves	3-foot Dual-Pol Parabolic, HPD3-5.2NS	32.3	Y	RDH4509B
Radio Waves	3-foot Parabolic, SP3-5.2	31.4	Y	RDH4513B
Gabriel	2.5-foot Standard QuickFire Parabolic, QF2.5-52-N	31.2	Y	
Gabriel	2.5-foot Standard Dual QuickFire Parabolic, QFD2.5-52-N	31.1	Y	
Radio Waves	3-foot Dual-Pol Parabolic, SPD3-5.2	31.1	Y	RDH4504B
Andrew	2-foot Dual-Pol Parabolic, PX2F-52	29.4	Y	
Andrew	2-foot Parabolic, P2F-52	29.4	Y	
MTI	3-foot Single-Pol, MT-487000/N	29	Y	
Radio Waves	2-foot Parabolic, SP2-5.2	29	Y	
Radio Waves	2-foot Dual-Pol Parabolic, HPD2-5.2NS	28.8	Y	RDH4508B
Gabriel	2-foot Standard QuickFire Parabolic, QF2-52-N	28.5	Y	
Gabriel	2-foot Standard QuickFire Parabolic, QF2-52-N-RK	28.5	Y	
MTI	2-foot Dual-Pol, MT-486013/N	28.5	Y	
MTI	2-foot Single-Pol, MT-466009/N	28.5	Y	
Gabriel	2-foot Standard Dual QuickFire Parabolic, QFD2-52-N	28.4	Y	
Gabriel	2-foot Standard Dual QuickFire Parabolic, QFD2-52-N-RK	28.4	Y	
Gabriel	2-foot High Performance QuickFire Parabolic, HQF2-52-N	28.2	Y	
Gabriel	2-foot High Performance Dual QuickFire Parabolic, HQFD2-52-N	28.1	Y	
Radio Waves	2-foot Dual-Pol Parabolic, SPD2-5.2	28.1	Y	RDH4503B

Manufacturer	Antenna type	Nominal gain (dBi)	Parabolic dish	Cambium part number
RFS	2-foot Parabolic, SPF2-52AN	27.9	Y	
Stella Doradus	2-foot Single-Pol, 56 PSD61	27	Y	
MARS	MA-WS54-50R Flat Plate (Dual-Pol)	23	N	Integrated
MTI	15 inch Dual-Pol Flat Panel, MT-485025/NVH	23	N	
Andrew	1.25-foot Flat Panel Dual, UBXP375-4-1	21	N	
Andrew	1-foot Flat Panel Single, UBP300-4-1	21	N	
MARS	Small Form Factor Flat Plate Antenna MA-EM56-DP19CM.	19	N	Integrated
Laird	60 Sectorized (Dual Pol)	17	N	
Laird	90 Sectorized (Dual Pol)	17	N	
KPPA	OMNI (Dual-Pol)	13	N	

Table 17 Antennas permitted for deployment in USA/Canada – 5.4 GHz

Manufacturer	Antenna type	Nominal gain (dBi)	Parabolic dish	Cambium part number
Andrew	4-foot Dual-Pol Parabolic, PX4F-52	34.9	Y	RDG4453B
Andrew	4-foot Parabolic, P4F-52	34.9	Y	RDH4524A
Gabriel	4-foot Standard QuickFire Parabolic, QF4-52-N	34.8	Y	
Gabriel	4-foot Standard QuickFire Parabolic, QF4-52-N-RK	34.8	Y	
Radio Waves	4-foot Parabolic, SP4-5.2	34.8	Y	
Gabriel	4-foot Standard Dual QuickFire Parabolic, QFD4-52-N	34.7	Y	
Gabriel	4-foot Standard Dual QuickFire Parabolic, QFD4-52-N-RK	34.7	Y	
Radio Waves	4-foot Dual-Pol Parabolic, HPD4-5.2NS	34.7	Y	RDH4510B
Gabriel	4-foot High Performance QuickFire Parabolic, HQF4-52-N	34.4	Y	
Radio Waves	4-foot Dual-Pol Parabolic, SPD4-5.2	34.4	Y	RDH4505B
Gabriel	4-foot High Performance Dual QuickFire Parabolic, HQFD4-52-N	34.3	Y	
RFS	4-foot HP Parabolic, SDF4-52AN	33.9	Y	

Manufacturer	Antenna type	Nominal gain (dBi)	Parabolic dish	Cambium part number
RFS	4-foot Parabolic, SPF4-52AN	33.9	Y	
Andrew	3-foot Dual-Pol Parabolic, PX3F-52	33.4	Y	
Andrew	3-foot Parabolic, P3F-52	33.4	Y	
Stella Doradus	4-foot Single-Pol, 56 PSD113	32.4	Y	
Radio Waves	3-foot Dual-Pol Parabolic, HPD3-5.2NS	32.3	Y	RDH4509B
Radio Waves	3-foot Parabolic, SP3-5.2	31.4	Y	RDH4513B
Gabriel	2.5-foot Standard QuickFire Parabolic, QF2.5-52-N	31.2	Y	
Gabriel	2.5-foot Standard Dual QuickFire Parabolic, QFD2.5-52-N	31.1	Y	
Radio Waves	3-foot Dual-Pol Parabolic, SPD3-5.2	31.1	Y	RDH4504B
Andrew	2-foot Dual-Pol Parabolic, PX2F-52	29.4	Y	
Andrew	2-foot Parabolic, P2F-52	29.4	Y	
MTI	3-foot Single-Pol, MT-487000/N	29	Y	
Radio Waves	2-foot Parabolic, SP2-5.2	29	Y	
Radio Waves	2-foot Dual-Pol Parabolic, HPD2-5.2NS	28.8	Y	RDH4508B
Gabriel	2-foot Standard QuickFire Parabolic, QF2-52-N	28.5	Y	
Gabriel	2-foot Standard QuickFire Parabolic, QF2-52-N-RK	28.5	Y	
MTI	2-foot Dual-Pol, MT-486013/N	28.5	Y	
MTI	2-foot Single-Pol, MT-466009/N	28.5	Y	
Gabriel	2-foot Standard Dual QuickFire Parabolic, QFD2-52-N	28.4	Y	
Gabriel	2-foot Standard Dual QuickFire Parabolic, QFD2-52-N-RK	28.4	Y	
Gabriel	2-foot High Performance QuickFire Parabolic, HQF2-52-N	28.2	Y	
Gabriel	2-foot High Performance Dual QuickFire Parabolic, HQFD2-52-N	28.1	Y	
Radio Waves	2-foot Dual-Pol Parabolic, SPD2-5.2	28.1	Y	RDH4503B
RFS	2-foot Parabolic, SPF2-52AN	27.9	Y	
Stella Doradus	2-foot Single-Pol, 56 PSD61	27	Y	

Manufacturer	Antenna type	Nominal gain (dBi)	Parabolic dish	Cambium part number
MARS	MA-WS54-50R Flat Plate (Dual-Pol)	23	N	Integrated
MTI	15 inch Dual-Pol Flat Panel, MT-485025/NVH	23	N	
Andrew	1.25-foot Flat Panel Dual, UBXP375-4-1	21	N	
Andrew	1-foot Flat Panel Single, UBP300-4-1	21	N	
MARS	Small Form Factor Flat Plate Antenna MA-EM56-DP19CM.	19	N	Integrated
Laird	60 Sectorized (Dual-Pol)	17	N	
Laird	90 Sectorized (Dual-Pol)	17	N	
KPPA	OMNI (Dual-Pol)	13	N	

Table 18 Antennas permitted for deployment in USA/Canada – 5.8 GHz

Manufacturer	Antenna type	Nominal gain (dBi)	Parabolic dish	Cambium part number
Gabriel	6-foot Standard Dual QuickFire Parabolic, QFD6-52-N	37.7	Y	
Gabriel	6-foot Standard QuickFire Parabolic, QF6-52-N	37.7	Y	
Radio Waves	6-foot Dual-Pol Parabolic, HPD6-5.2NS	37.7	Y	RDH4511B
Radio Waves	6-foot Parabolic, SP6-2/5	37.7	Y	
Radio Waves	6-foot Parabolic, SP6-5.2	37.7	Y	
Andrew	6-foot Dual-Pol Parabolic, PX6F-52	37.6	Y	
Andrew	6-foot Parabolic, P6F-52	37.6	Y	RDH4525A
Radio Waves	6-foot Dual-Pol Parabolic, SPD6-5.2	37.5	Y	RDH4506B
Gabriel	6-foot High Performance QuickFire Parabolic, HQF6-52-N	37.4	Y	
RFS	6-foot HP Parabolic, SDF6-52AN	37.4	Y	
RFS	6-foot Parabolic, SPF6-52AN	37.4	Y	
Gabriel	6-foot High Performance Dual QuickFire Parabolic, HQFD6-52-N	37.3	Y	
Andrew	4-foot Dual-Pol Parabolic, PX4F-52	34.9	Y	RDG4453B
Andrew	4-foot Parabolic, P4F-52	34.9	Y	RDH4524A
Gabriel	4-foot Standard QuickFire Parabolic, QF4-52-N	34.8	Y	

Manufacturer	Antenna type	Nominal gain (dBi)	Parabolic dish	Cambium part number
Gabriel	4-foot Standard QuickFire Parabolic, QF4-52-N-RK	34.8	Y	
Radio Waves	4-foot Parabolic, SP4-5.2	34.8	Y	
Gabriel	4-foot Standard Dual QuickFire Parabolic, QFD4-52-N	34.7	Y	
Gabriel	4-foot Standard Dual QuickFire Parabolic, QFD4-52-N-RK	34.7	Y	
Radio Waves	4-foot Dual-Pol Parabolic, HPD4-5.2NS	34.7	Y	RDH4510B
Radio Waves	4-foot Parabolic, SP4-2/5	34.6	Y	
Gabriel	4-foot High Performance QuickFire Parabolic, HQF4-52-N	34.4	Y	
Radio Waves	4-foot Dual-Pol Parabolic, SPD4-5.2	34.4	Y	RDH4505B
Gabriel	4-foot High Performance Dual QuickFire Parabolic, HQFD4-52-N	34.3	Y	
RFS	4-foot HP Parabolic, SDF4-52AN	33.9	Y	
RFS	4-foot Parabolic, SPF4-52AN	33.9	Y	
Andrew	3-foot Dual-Pol Parabolic, PX3F-52	33.4	Y	
Andrew	3-foot Parabolic, P3F-52	33.4	Y	
Stella Doradus	4-foot Single-Pol, 56 PSD113	32.4	Y	
Radio Waves	3-foot Dual-Pol Parabolic, HPD3-5.2NS	32.3	Y	RDH4509B
Radio Waves	3-foot Parabolic, SP3-2/5	31.4	Y	
Radio Waves	3-foot Parabolic, SP3-5.2	31.4	Y	RDH4513B
Gabriel	2.5-foot Standard QuickFire Parabolic, QF2.5-52-N	31.2	Y	
Gabriel	2.5-foot Standard Dual QuickFire Parabolic, QFD2.5-52-N	31.1	Y	
Radio Waves	3-foot Dual-Pol Parabolic, SPD3-5.2	31.1	Y	RDH4504B
Andrew	2-foot Dual-Pol Parabolic, PX2F-52	29.4	Y	
Andrew	2-foot Parabolic, P2F-52	29.4	Y	
MTI	3-foot Single-Pol, MT-487000/N	29	Y	
Radio Waves	2-foot Parabolic, SP2-5.2	29	Y	
Radio Waves	2-foot Dual-Pol Parabolic, HPD2-5.2NS	28.8	Y	RDH4508B
Gabriel	2-foot Standard QuickFire Parabolic, QF2-52-N	28.5	Y	

Manufacturer	Antenna type	Nominal gain (dBi)	Parabolic dish	Cambium part number
Gabriel	2-foot Standard QuickFire Parabolic, QF2-52-N-RK	28.5	Y	
MTI	2-foot Dual-Pol, MT-486013/N	28.5	Y	
MTI	2-foot Single-Pol, MT-466009/N	28.5	Y	
Gabriel	2-foot Standard Dual QuickFire Parabolic, QFD2-52-N	28.4	Y	
Gabriel	2-foot Standard Dual QuickFire Parabolic, QFD2-52-N-RK	28.4	Y	
Radio Waves	2-foot Parabolic, SP2-2/5	28.3	Y	
Gabriel	2-foot High Performance QuickFire Parabolic, HQF2-52-N	28.2	Y	
Gabriel	2-foot High Performance Dual QuickFire Parabolic, HQFD2-52-N	28.1	Y	
Radio Waves	2-foot Dual-Pol Parabolic, SPD2-5.2	28.1	Y	RDH4503B
RFS	RFS 2-foot Parabolic, SPF2-52AN	27.9	Y	
Stella Doradus	2-foot Single-Pol, 56 PSD61	27	Y	
MARS	MA-WS54-50R Flat Plate (Dual-Pol)	23	N	Integrated
MTI	15 inch Dual-Pol Flat Panel, MT-485025/NVH	23	N	
RFS	1-foot Flat Panel, MA0528-23AN	23	N	
Andrew	1.25-foot Flat Panel Dual, UBXP375-4-1	21	N	
Andrew	1-foot Flat Panel Single, UBP300-4-1	21	N	
MARS	Small Form Factor Flat Plate Antenna MA-EM56-DP19CM.	19	N	Integrated
Laird	60 Sectorized (Dual-Pol)	17	N	
Laird	90 Sectorized (Dual-Pol)	17	N	
KPPA	OMNI Dual-Pol)	13	N	

Ethernet cabling

Ethernet standards and cable lengths

All configurations require a copper Ethernet connection from the ODU (PSU port) to the PSU. Advanced configurations may also require one the following:

- An optical or copper Ethernet connection from the ODU (SFP port) to network terminating equipment or a linked ODU.

Table 19 specifies, for each type of PSU and power supply, the maximum permitted PSU drop cable length.

Table 20 specifies, for copper SFP interfaces, the Ethernet standards supported and the maximum permitted drop cable lengths.

Note

For optical SFP interfaces, refer to SFP module kits on page 2-30 for details of the Ethernet standards supported and maximum permitted cable lengths.

Table 19 PSU drop cable length restrictions

Type of PSU installed	Power supply to PSU	Ethernet supported (*1)	Power output to auxiliary device	Maximum cable length (*2)
AC Power Injector	AC mains	100BASE-TX 1000BASE-T	No	100 m (330 ft)
AC+DC Enhanced power injector	AC mains	No (*3)	No	300 m (990 ft)
	48 V dc	No (*3)	No	300 m (990 ft)
	AC mains	100BASE-TX 1000BASE-T	Yes	100 m (330 ft)
	48 V dc	100BASE-TX 1000BASE-T	Yes	100 m (330 ft)

(*1) 10BASE-T is not supported by PTP 550.

(*2) Maximum length of Ethernet cable from ODU to network terminating equipment via PSU.

(*3) Ethernet is provided via optical SFP interface.

Table 20 Copper SFP Ethernet standards and cable length restrictions

ODU drop cable	Power over Ethernet	Ethernet supported	Maximum cable length (*1)
SFP (copper) – linked device	None	100BASE-TX	100 m (330 ft)

(*1) Maximum length of Ethernet cable from the ODU to the linked device.

Outdoor copper Cat5e Ethernet cable

For copper Cat5e Ethernet connections from the ODU to the PSU, LPUs and other devices, use Cat5e cable that is gel-filled and shielded with copper-plated steel, for example Superior Essex type BBDGe. This is known as “drop cable” (Figure 11).

Caution

Always use Cat5e cable that is gel-filled and shielded with copper-plated steel. Alternative types of drop cable are not supported by Cambium Networks.

Order Superior Essex type BBDGe cable from Cambium Networks (Table 21). Other lengths of this cable are available from Superior Essex.

Figure 11 Outdoor drop cable

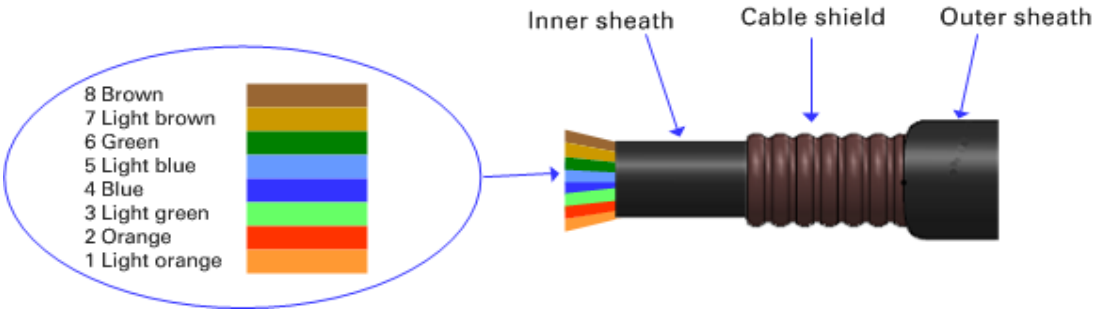

Table 21 Drop cable part numbers

Cambium description	Cambium part number
1000 ft Reel Outdoor Copper Clad CAT5E	WB3175
328 ft (100 m) Reel Outdoor Copper Clad CAT5E	WB3176

Cable grounding kit

Copper drop cable shields must be bonded to the grounding system in order to prevent lightning creating a potential difference between the structure and cable, which could cause arcing, resulting in fire risk and damage to equipment. Optical cables do not require grounding.

One grounding kit (Figure 12) is required for each grounding point on the PSU and copper SFP drop cables. Order cable grounding kits from Cambium Networks.

Caution

To provide adequate protection, all grounding cables must be a minimum size of 10 mm^2 csa (8AWG), preferably 16 mm^2 csa (6AWG), or 25 mm^2 csa (4AWG).

Figure 12 Cable grounding kit

Table 22 Cable grounding kit part numbers

Cambium description	Cambium part number
Cable Grounding Kits For 1/4" And 3/8" Cable	01010419001

Lightning protection unit (LPU) and grounding kit

PTP 550 LPUs provide transient voltage surge suppression for PTP 550 installations. Each PSU requires two LPUs, one near the ODU and the other near the linked device, usually at the building entry point (Table 23).

Table 23 LPU and grounding kit contents

Lightning protection units (LPUs) LPU grounding point nuts and washers 	ODU to top LPU drop cable (600 mm) EMC strain relief cable glands
U-bolts, nuts and washers for mounting LPUs 	ODU to top LPU ground cable (M6-M6)
Bottom LPU ground cable (M6-M10) 	ODU to ground cable (M6-M10

One LPU and grounding kit (Table 23) is required for the PSU drop cable connection to the ODU.

Table 24 LPU and grounding kit part number

Cambium description	Cambium part number
LPU and Grounding Kit (One Kit Per End)	C000065L007

Note

PTP 550 LPUs are not suitable for installation on SFP copper Cat5e Ethernet interfaces. For SFP drop cables, obtain suitable surge protectors from a specialist supplier.

SFP optical Ethernet interfaces do not require surge protectors.

RJ45 connectors and spare glands

RJ45 connectors are required for plugging Cat5e cables into ODUs, LPUs, PSUs and other devices. Order RJ45 connectors and crimp tool from Cambium Networks (Table 25).

Note

The RJ45 connectors and crimp tool listed in Table 25 work with Superior Essex type BBDGe cable (as supplied by Cambium Networks). They may not work with other types of cable.

The ODU is supplied with one environmental sealing gland for the drop cable. However, this is not suitable when surge protection is required: EMC glands must be used instead. EMC strain relief cable glands (quantity 5) are included in the LPU and grounding kit (Figure 13). These are identified with a black sealing nut. If extra glands are required, order them from Cambium Networks (in packs of 10) (Table 25).

One long EMC strain relief gland (Figure 16) is included in each SFP module kit. This is longer than the standard cable gland as it must house an SFP module plugged into the ODU.

Figure 13 Cable gland

Table 25 RJ45 connector and spare gland part numbers

Cambium description	Cambium part number
Tyco/AMP, Mod Plug RJ45 Unscreened, 100 pack	WB3177

Tyco/AMP Crimp Tool	WB3211
RJ-45 Spare Grounding Gland - PG16 size (Qty. 10)	N000065L033

Cable hoisting grip

One or more grips are required for hoisting the drop cable up to the ODU without damaging the gland or RJ45 plug (Figure 14). They are not supplied by Cambium Networks.

Figure 14 Cable hoisting grip

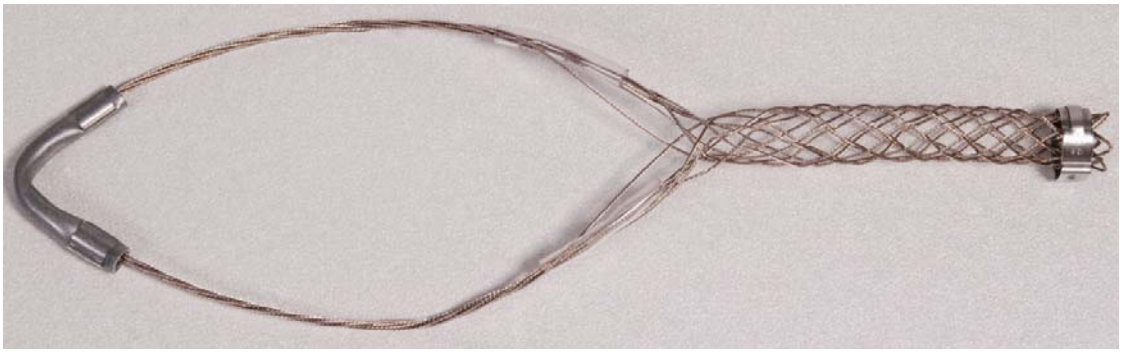

Drop cable tester

The drop cable tester is an optional item for testing the resistances between the RJ45 pins of the drop cable. A suitable example is the Modapt adaptor manufactured by The Siemon Company.

Indoor Cat5e cable

To connect the PSU to network terminating equipment, use indoor Cat5e cable. The ODU network connection implements automatic MDI/MDI-X sensing and pair swapping, allowing connection to networking equipment that requires cross-over cables (MDI-X networks) or straight-through cables (MDI Networks).

SFP module kits

SFP module kits allow connection of a PTP 550 Series ODU to a network over a Gigabit Ethernet interface in one of the following full-duplex modes:

- Optical Gigabit Ethernet: 1000BASE-LX or 1000BASE-SX
- Copper Gigabit Ethernet: 100BASE-TX or 1000BASE-T

Order SFP module kits from Cambium Networks (Table 26).

Table 26 SFP module kit part numbers

Cambium description	Cambium part number
Single Mode Optical SFP Interface per ODU	C000065L008

Multi-mode Optical SFP Interface per ODU	C000065L009
Gig-Ethernet SFP Interface per ODU	C000065L010

To compare the capabilities of the two optical SFP modules, refer to Table 27 and Table 28.

Table 27 Single Mode Optical SFP Interface per ODU (part number C000065L008)

Core/ cladding (microns)	Mode	Bandwidth at 1310 nm (MHz/km)	Maximum length of optical interface	Insertion loss (dB)
62.5/125	Multi	500	550 m (1800 ft)	1.67
50/125	Multi	400	550 m (1800 ft)	0.07
50/125	Multi	500	550 m (1800 ft)	1.19
10/125	Single	N/A	5000 m (16400 ft)	0.16

Table 28 Multi-mode Optical SFP Interface per ODU (part number C000065L009)

Core/ cladding (microns)	Mode	Bandwidth at 850 nm (MHz/km)	Maximum length of optical interface	Insertion loss (dB)
62.5/125	Multi	160	220 m (720 ft)	2.38
62.5/125	Multi	200	275 m (900 ft)	2.6
50/125	Multi	400	500 m (1640 ft)	3.37
50/125	Multi	500	550 m (1800 ft)	3.56

The upgrade kits contain the following components:

- Optical or copper SFP transceiver module (Figure 15)
- Long EMC strain relief cable gland (Figure 16)
- The *PTP 550 Series SFP Interface Upgrade Guide*
- License key instructions and unique Access Key

Figure 15 Optical or copper SFP transceiver module

Figure 16 Long cable gland

Note

PTP 550 does not support the Synchronous Ethernet or 1588 Transparent Clock features using copper SFP transceivers.

Optical cable and connectors

Order an optical cable with LC connectors from a specialist fabricator, quoting the specification shown in Figure 17. It must be the correct length to connect the ODU to the other device. LC connectors should be supplied with dust caps to prevent dust build up.

Figure 17 Optical optic cable and connector specification

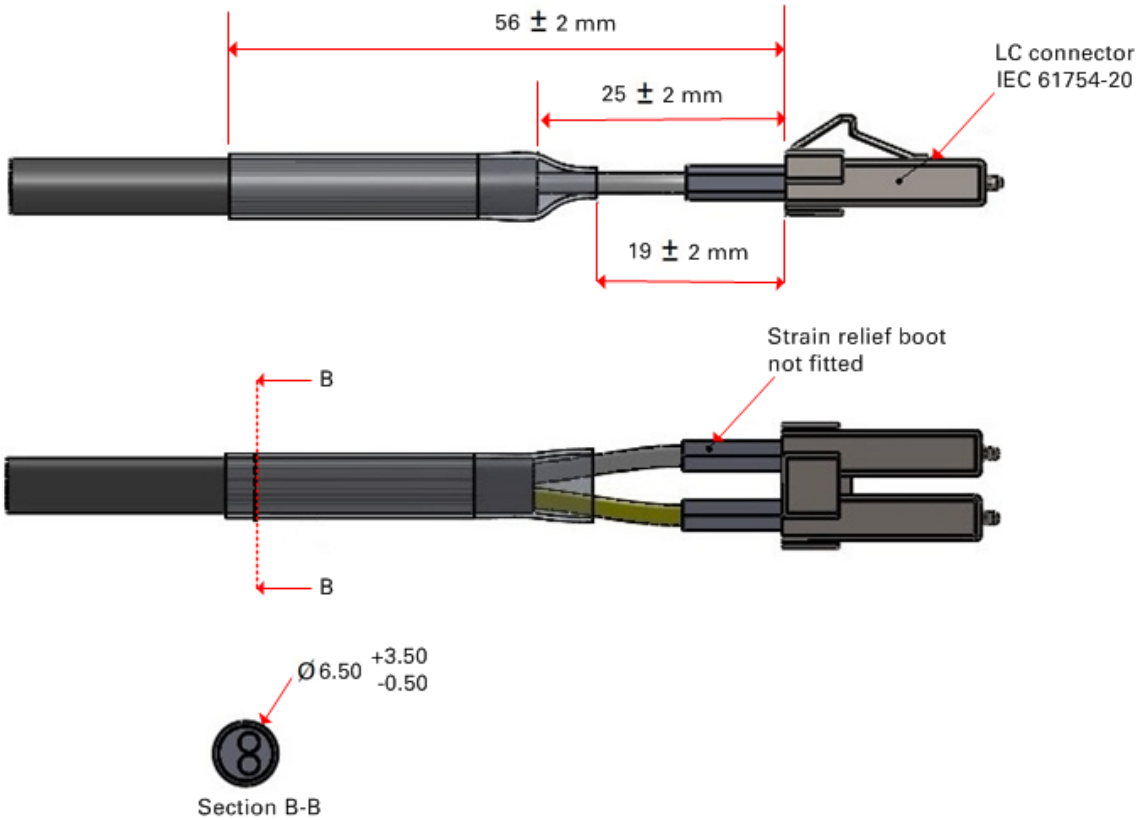

Chapter 3: System planning

This chapter provides information to help the user to plan a PTP 550 link.

The following topics are described in this chapter:

- Typical deployment on page 3-34 contains diagrams illustrating typical PTP 550 site deployments.
- Site planning on page 3-39 describes factors to be considered when planning the proposed link end sites, including grounding, lightning protection and equipment location.
- Radio spectrum planning on page 3-48 describes how to plan PTP 550 links to conform to the regulatory restrictions that apply in the country of operation.
- Link planning on page 3-52 describes factors to be taken into account when planning links, such as range, path loss and throughput.
- Planning for connectorized units on page 3-54 describes factors to be taken into account when planning to use connectorized ODUs with external antennas in PTP 550 links.
- Network management planning on page 3-59 describes how to plan for PTP 550 links to be managed remotely using SNMP.
- Security planning on page 3-60 describes how to plan for PTP 550 links to operate in secure mode.
- System threshold on page 3-61 contains tables that specify the system threshold (dBm), output power (dBm) and maximum link loss (dB) per channel bandwidth and modulation mode.

Typical deployment

This section contains diagrams illustrating typical PTP 550 site deployments.

ODU with POE interface to PSU

In the basic configuration, there is only one Ethernet interface, a copper Cat5e power over Ethernet (POE) from the PSU to the ODU (PSU port), as shown in the following diagrams: mast or tower installation (Figure 18), wall installation (Figure 19) and roof installation (Figure 20).

Figure 18 Mast or tower installation

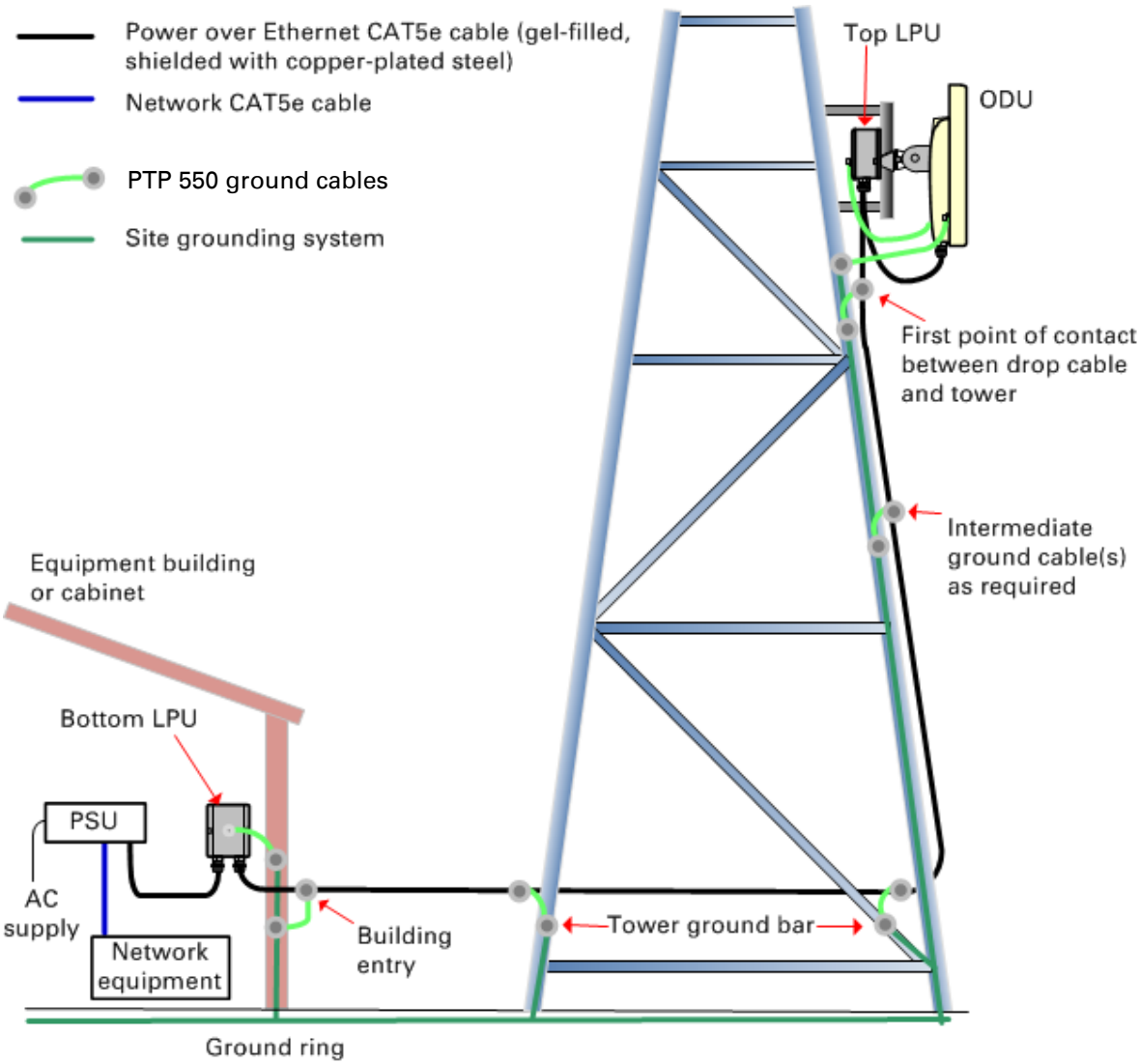

Figure 19 Wall installation

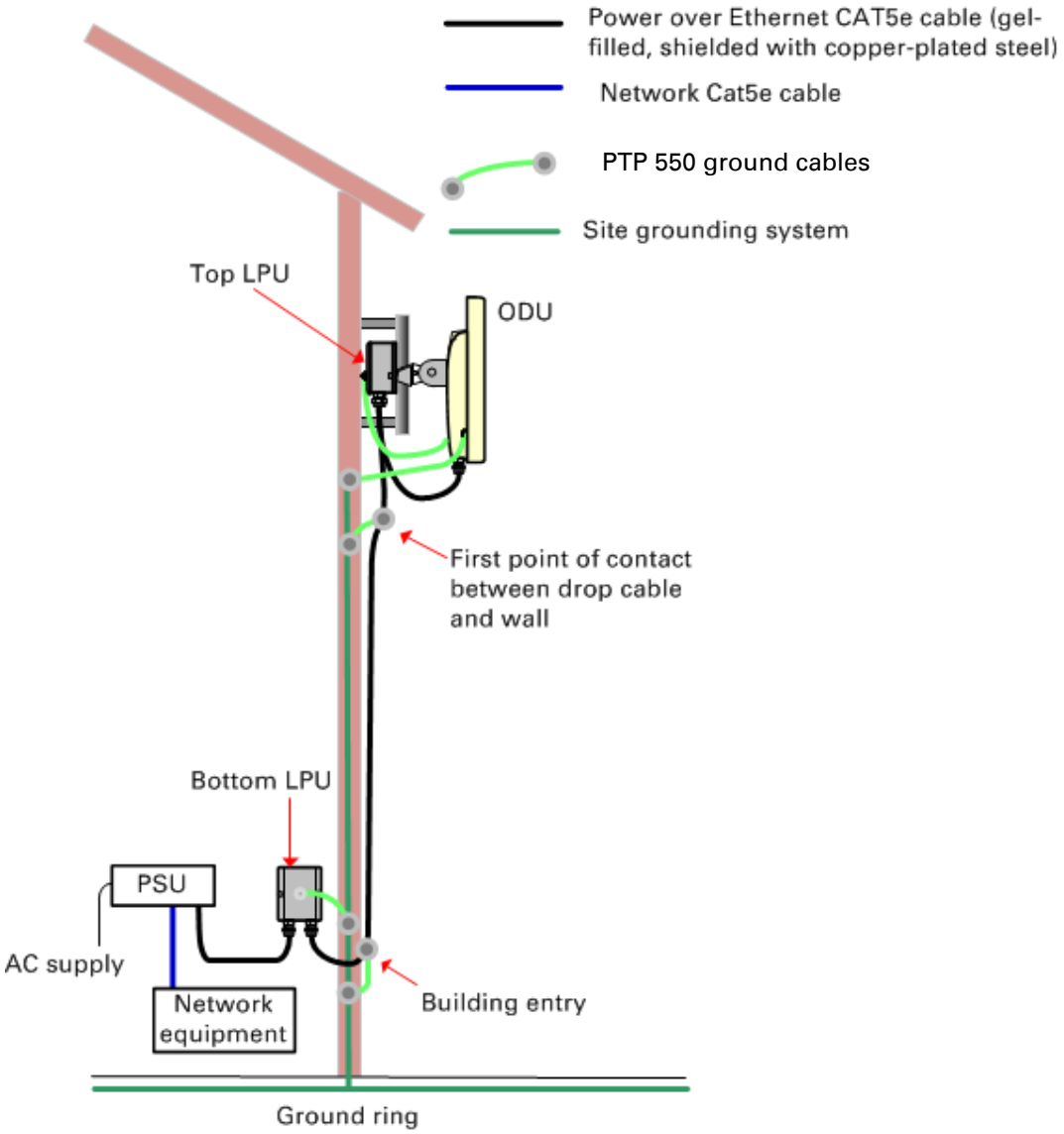

Figure 20 Roof installation

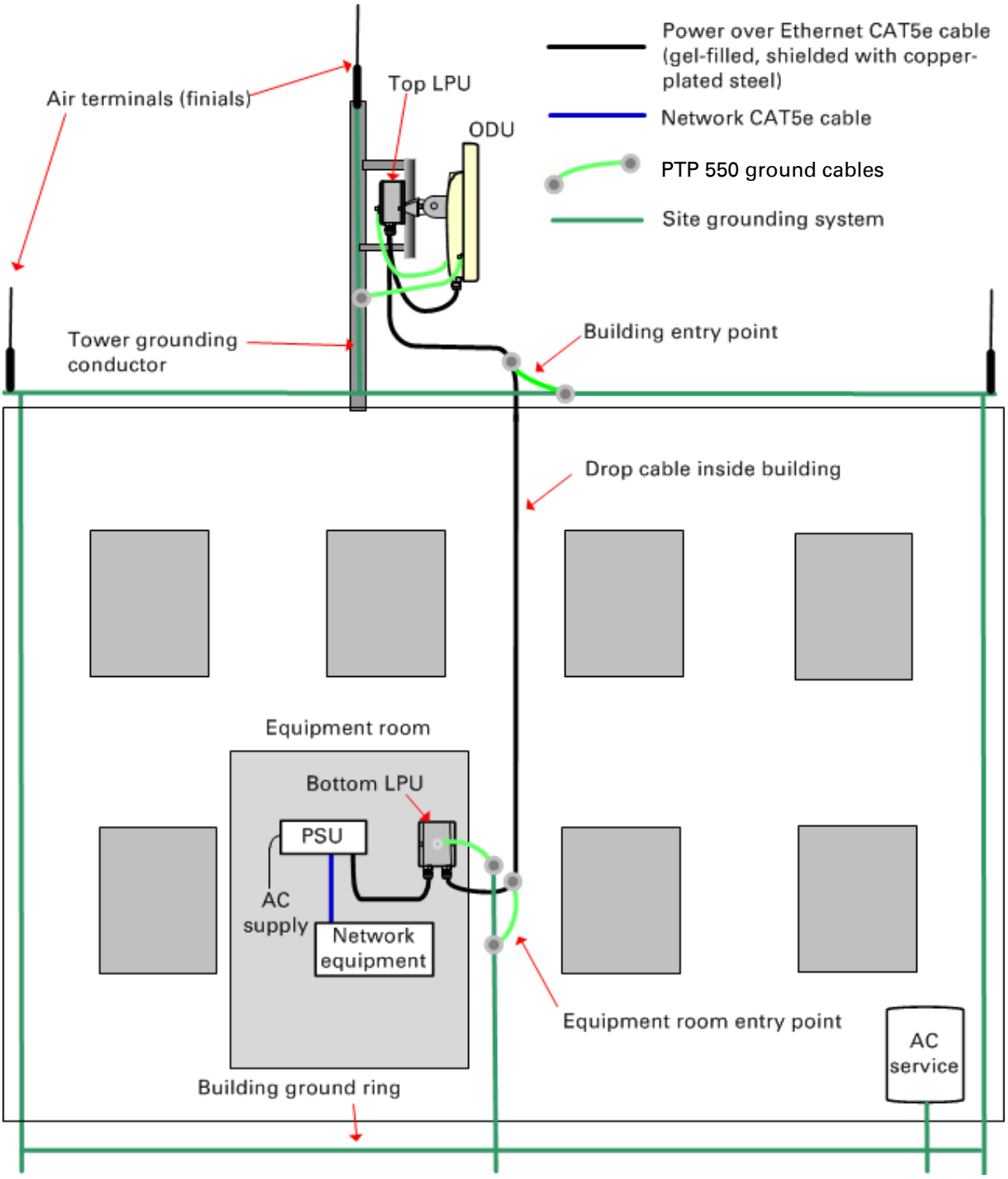

SFP Ethernet interfaces

There may be one additional Ethernet interface connected to the ODU SFP port (copper or optical), as shown in the following diagrams:

- ODU with copper SFP and PSU interfaces – Figure 21

- ODU with optical SFP and PSU interfaces – Figure 22

Figure 21 ODU with copper SFP and PSU interfaces

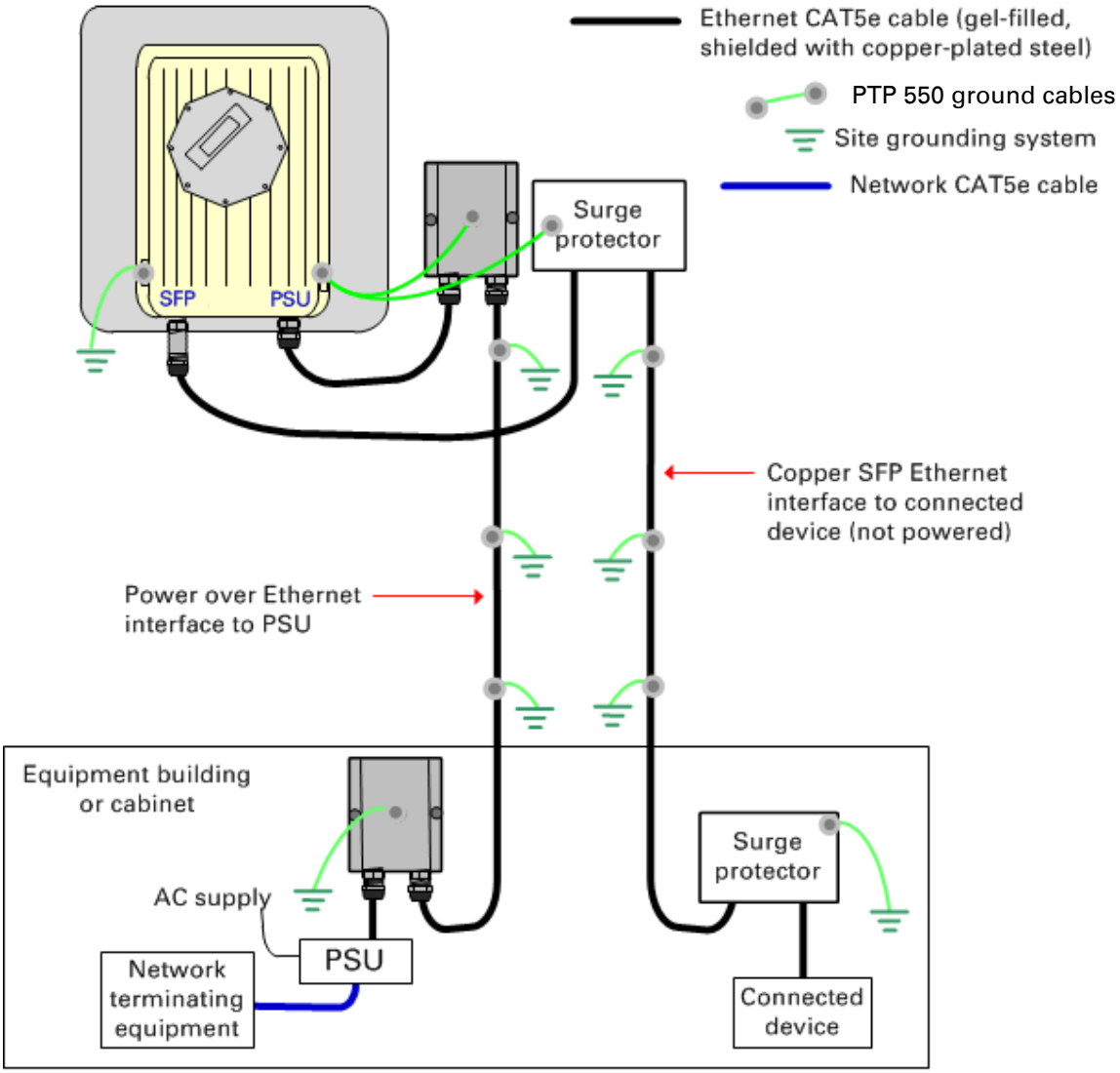

Figure 22 ODU with optical SFP and PSU interfaces

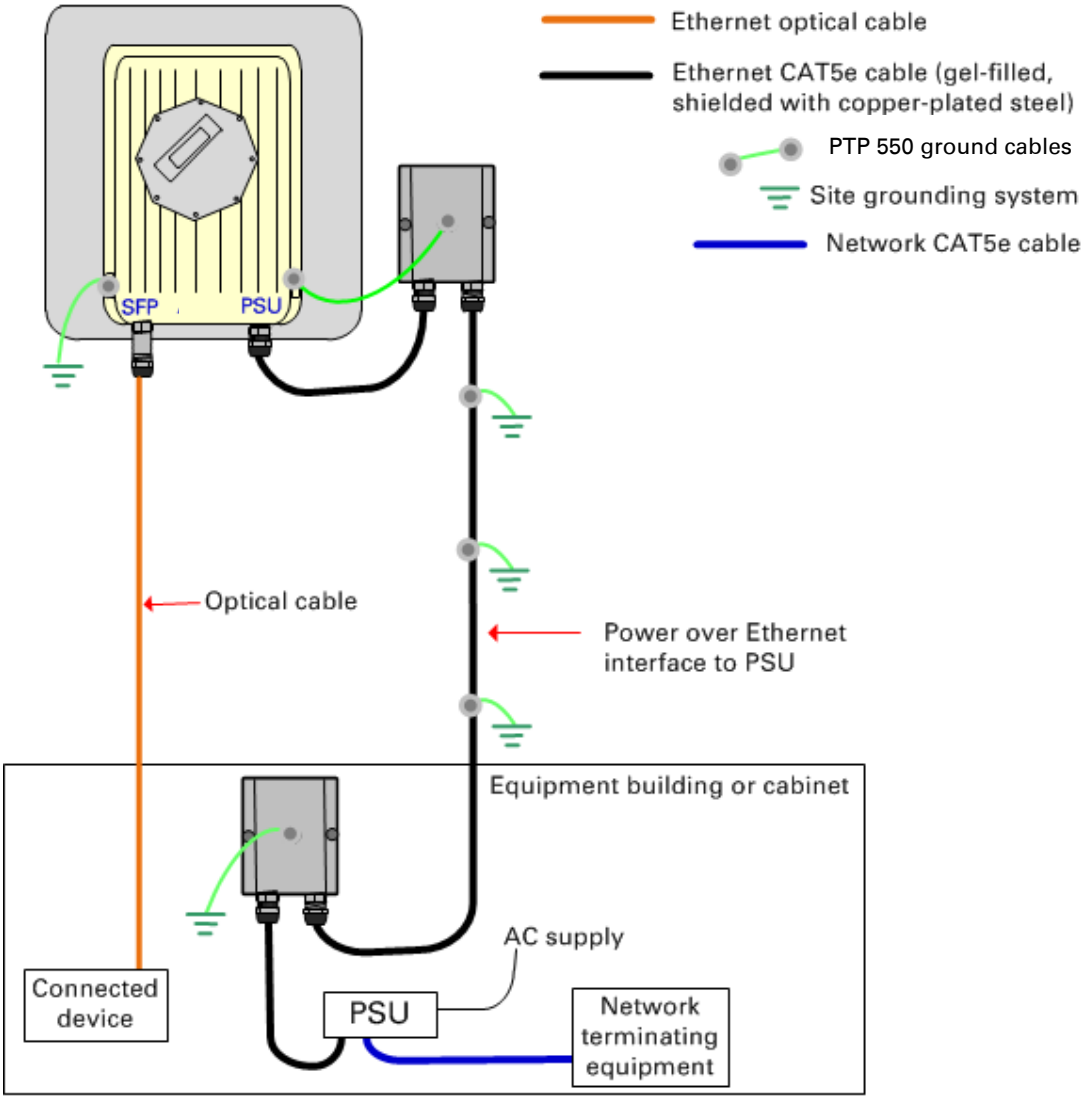

Site planning

This section describes factors to be considered when planning the proposed link end sites, including grounding, lightning protection and equipment location for the ODU and PSU.

Grounding and lightning protection

Warning

Electro-magnetic discharge (lightning) damage is not covered under warranty. The recommendations in this guide, when followed correctly, give the user the best protection from the harmful effects of EMD. However 100% protection is neither implied nor possible.

Structures, equipment and people must be protected against power surges (typically caused by lightning) by conducting the surge current to ground via a separate preferential solid path. The actual degree of protection required depends on local conditions and applicable local regulations. To adequately protect a PTP 550 installation, both ground bonding and transient voltage surge suppression are required.

Full details of lightning protection methods and requirements can be found in the international standards IEC 61024-1 and IEC 61312-1, the U.S. National Electric Code ANSI/NFPA No. 70-1984 or section 54 of the Canadian Electric Code.

Note

International and national standards take precedence over the requirements in this guide.

Lightning protection zones

Use the rolling sphere method (Figure 23) to determine where it is safe to mount equipment. An imaginary sphere, typically 50 meters in radius, is rolled over the structure. Where the sphere rests against the ground and a strike termination device (such as a finial or ground bar), all the space under the sphere is considered to be in the zone of protection (Zone B). Similarly, where the sphere rests on two finials, the space under the sphere is considered to be in the zone of protection.

Figure 23 Rolling sphere method to determine the lightning protection zones

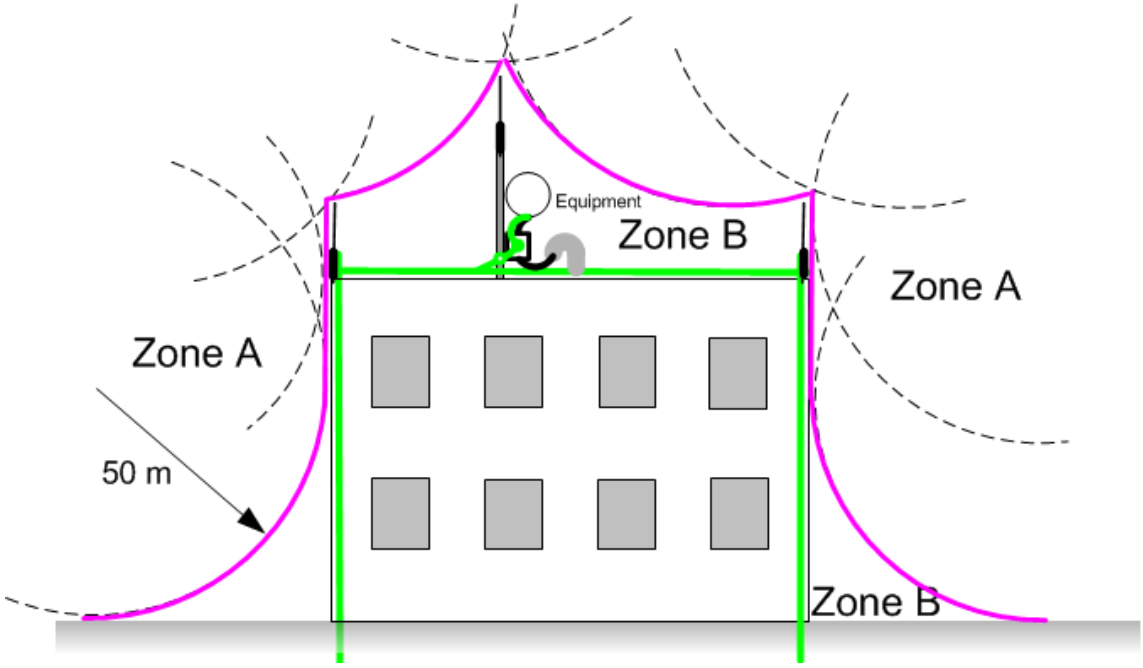

Zone A: In this zone a direct lightning strike is possible. Do not mount equipment in this zone.

Zone B: In this zone, direct EMD (lightning) effects are still possible, but mounting in this zone significantly reduces the possibility of a direct strike. Mount equipment in this zone.

Warning

Never mount equipment in Zone A. Mounting in Zone A may put equipment, structures and life at risk.

Site grounding system

Confirm that the site has a correctly installed grounding system on a common ground ring with access points for grounding PTP 550 equipment.

If the outdoor equipment is to be installed on the roof of a high building (Figure 20), confirm that the following additional requirements are met:

- A grounding conductor is installed around the roof perimeter to form the main roof perimeter lightning protection ring.
- Air terminals are installed along the length of the main roof perimeter lightning protection ring, typically every 6.1m (20ft).
- The main roof perimeter lightning protection ring contains at least two down conductors connected to the grounding electrode system. The down conductors should be physically separated from one another, as far as practical.

ODU and external antenna location

Find a location for the ODU (and external antenna for connectorized units) that meets the following requirements:

- The equipment is high enough to achieve the best radio path.
- People can be kept a safe distance away from the equipment when it is radiating. The safe separation distances are defined in Calculated distances on page 4-117.
- The equipment is lower than the top of the supporting structure (tower, mast or building) or its lightning air terminal.
- If the ODU is connectorized, select a mounting position that gives it maximum protection from the elements, but still allows easy access for connecting and weatherproofing the cables. To minimize cable losses, select a position where the antenna cable lengths can be minimized. If diverse or two external antennas are being deployed, it is not necessary to mount the ODU at the midpoint of the antennas.

ODU ambient temperature limits

Select a location where the ODU can operate within safe ambient temperature limits.

The ODU must be mounted in a Restricted Access Location (as defined in EN 60950-1) if the operating ambient temperature may exceed 40°C, including solar radiation.

If the ambient temperature never exceeds 40°C, the temperature of the external metal case parts of the ODU will not exceed the touch temperature limit of 70°C.

If the ambient temperature never exceeds 60°C, the temperature of the external metal case parts of the ODU will not exceed the touch temperature limit of 90°C.

Note

A restricted access location is defined (in EN 60950-1) as one where access may only be gained by use of a tool or lock and key, or other means of security, and access is controlled by the authority responsible for the location. Access must only be gained by persons who have been instructed about the reasons for the restrictions applied to the location and about any precautions that must be taken. Examples of permissible restricted access locations are a lockable equipment room or a lockable cabinet.

ODU wind loading

Ensure that the ODU and the structure on which it is mounted are capable of withstanding the prevalent wind speeds at a proposed PTP 550 site. Wind speed statistics should be available from national meteorological offices.

The ODU and its mounting bracket are capable of withstanding wind speeds of up to 325 kph (200 mph).

Wind blowing on the ODU will subject the mounting structure to significant lateral force. The magnitude of the force depends on both wind strength and surface area of the ODU. Wind loading is estimated using the following formulae:

- Force (in newtons) = $0.5 \times \rho \times V^2 \times A \times C_d$
  - "ρ" is the density of air = 1.225 kg/m^3,
  - "V" is the wind speed in meters per second,
  - "A" is the projected surface area of the ODU in square meters, and
  - "C_d" is the drag coefficient = 1.385.

The drag coefficient has been measured when the cover plate or antenna is perpendicular to the air flow.

Applying these formulae to the PTP 550 ODU at different wind speeds, the resulting wind loadings are shown in Table 29.

Table 29 ODU wind loading (newtons)

Type of ODU	Max surface area (square meters)	Wind speed (kilometers per hour)				
		225	250	275	300	325
Integrated (23 dBi)	0.130	308 N	380 N	460 N	547 N	643 N
Connectorized	0.051	169 N	208 N	253 N	300 N	353 N

Equivalent results in US customary units are shown in Table 30.

Table 30 ODU wind loading (pounds force)

Type of ODU	Max surface area (square feet)	Wind speed (miles per hour)				
		140	155	170	185	200
Integrated (23 dBi)	1.40	69 lb	85 lb	103 lb	123 lb	145 lb
Connectorized	0.55	38 lb	47 lb	57 lb	67 lb	79 lb

If an external antenna is installed, add the wind loading of the antenna to that of the ODU. The antenna manufacturer should be able to quote wind loading.

PSU DC power supply

If using the DC input on the AC+DC power injector, ensure that the DC power supply meets the following requirements:

- The voltage and polarity must be correct and must be applied to the correct PSU terminals.

- The power source must be rated as Safety Extra Low Voltage (SELV).
- The power source must be rated to supply at least 1.5A continuously.
- The power source cannot provide more than the Energy Hazard Limit as defined by IEC/EN/UL60950-1, Clause 2.5, Limited Power (The Energy Hazard Limit is 240VA).

PSU AC power supply

Always use an appropriately rated and approved AC supply cord-set in accordance with the regulations of the country of use.

PSU location

Find a location for the PSU (AC Power Injector or AC+DC Enhanced Power Injector) that meets the following requirements:

- The AC+DC Enhanced Power Injector can be mounted on a wall or other flat surface. The AC Power Injector can be mounted on a flat surface.
- The PSU is kept dry, with no possibility of condensation, flooding or rising damp.
- The PSU is located in an environment where it is not likely to exceed its operational temperature rating, allowing for natural convection cooling.
- The PSU can be connected to the ODU drop cable and network terminating equipment.
- The PSU can be connected to a compatible power supply. AC+DC Enhanced Power Injector: the use of DC supplies of less than 55V will reduce the usable distance between the PSU and ODU.

Drop cable grounding points

To estimate how many grounding kits are required for each drop cable, refer to the site installation diagrams (Figure 18 , Figure 19 and Figure 20) and use the following criteria:

- The drop cable shield must be grounded near the ODU at the first point of contact between the drop cable and the mast, tower or building.
- The drop cable shield must be grounded at the building entry point.

For mast or tower installations (Figure 18), use the following additional criteria:

- The drop cable shield must be grounded at the bottom of the tower, near the vertical to horizontal transition point. This ground cable must be bonded to the tower or tower ground bus bar (TGB), if installed.
- If the tower is greater than 61 m (200 ft) in height, the drop cable shield must be grounded at the tower midpoint, and at additional points as necessary to reduce the distance between ground cables to 61 m (200 ft) or less.
- In high lightning-prone geographical areas, the drop cable shield must be grounded at spacing between 15 to 22 m (50 to 75 ft). This is especially important on towers taller than 45 m (150 ft).

For roof installations (Figure 20), use the following additional criteria:

- The drop cable shield must be bonded to the building grounding system at its top entry point (usually on the roof).
- The drop cable shield must be bonded to the building grounding system at the entry point to the equipment room.

LPU location

Find a location for the top LPU that meets the following requirements:

- There is room to mount the LPU, either on the ODU mounting bracket or on the mounting pole below the ODU.
- The drop cable length between the ODU and top LPU must not exceed 600 mm.
- There is access to a metal grounding point to allow the ODU and top LPU to be bonded in the following ways: top LPU to ODU; ODU to grounding system.

Find a location for the bottom LPU that meets the following requirements:

- The bottom LPU can be connected to the drop cable from the ODU.
- The bottom LPU is within 600 mm (24 in) of the point at which the drop cable enters the building, enclosure or equipment room within a larger building.
- The bottom LPU can be bonded to the grounding system.

Multiple LPUs

If two drop cables are connected to the ODU, the PSU requires its own top LPU, and the copper SFP drop cable requires a top surge protector, not a PTP 550 LPU (Figure 24). Optical cables do not require LPUs or ground cables (Figure 25).

The copper SFP drop cable requires a bottom surge protector, not a PTP 550 LPU (Figure 26).

Figure 24 ODU with PSU and copper SFP interfaces

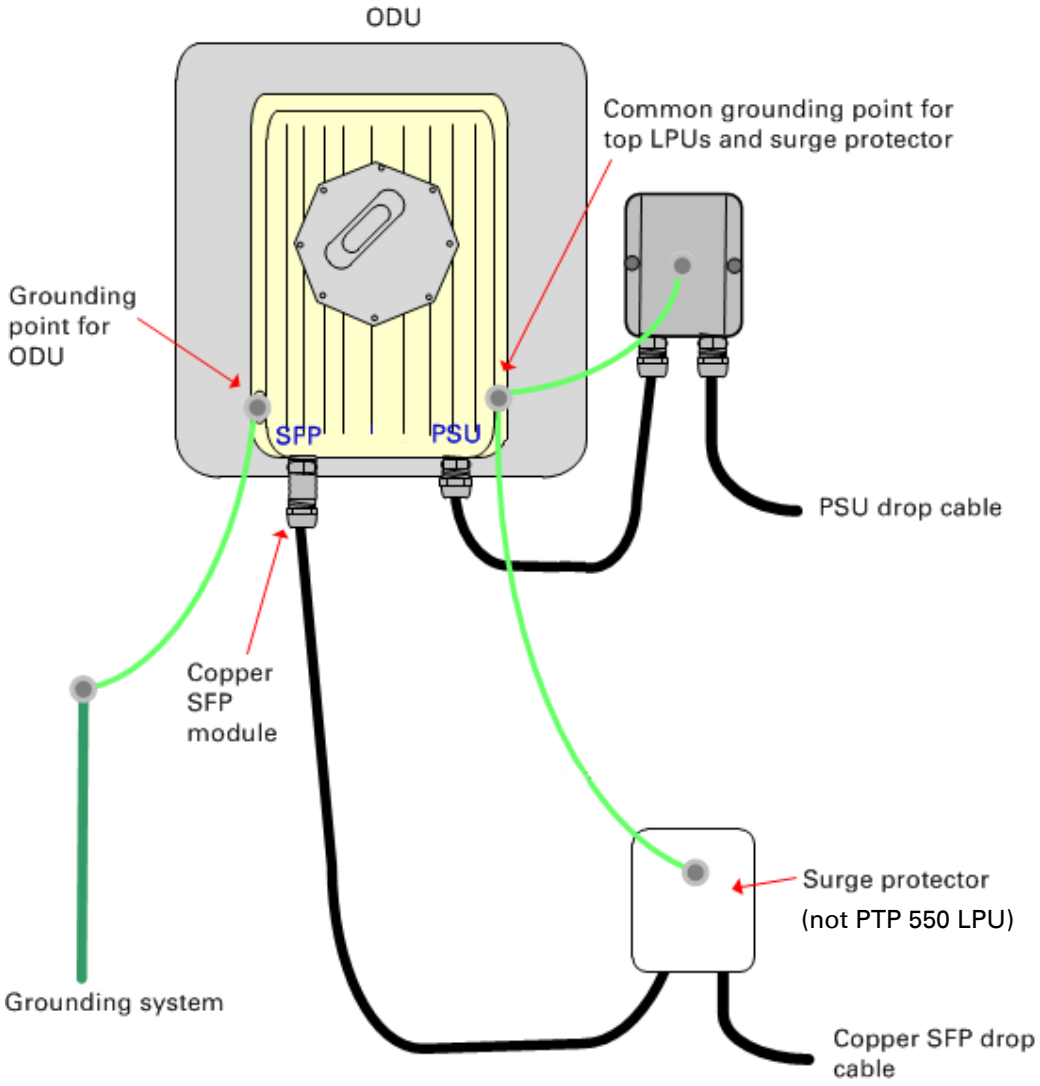

Figure 25 ODU with PSU and optical SFP interfaces

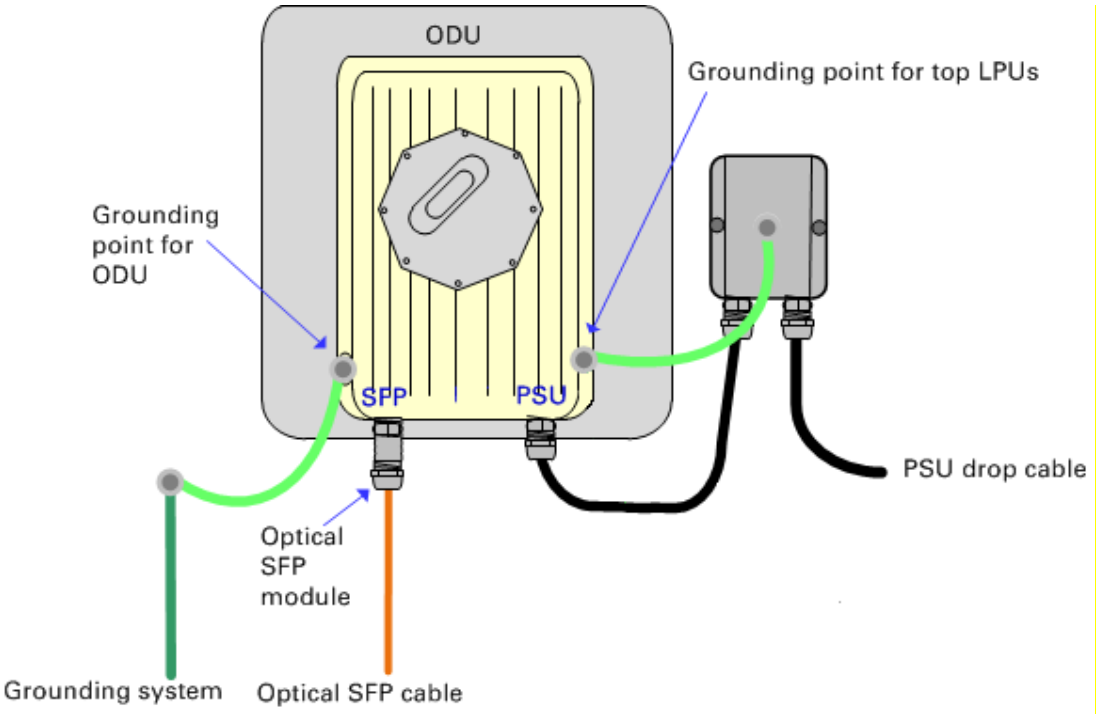

Figure 26 Bottom LPU and surge protector

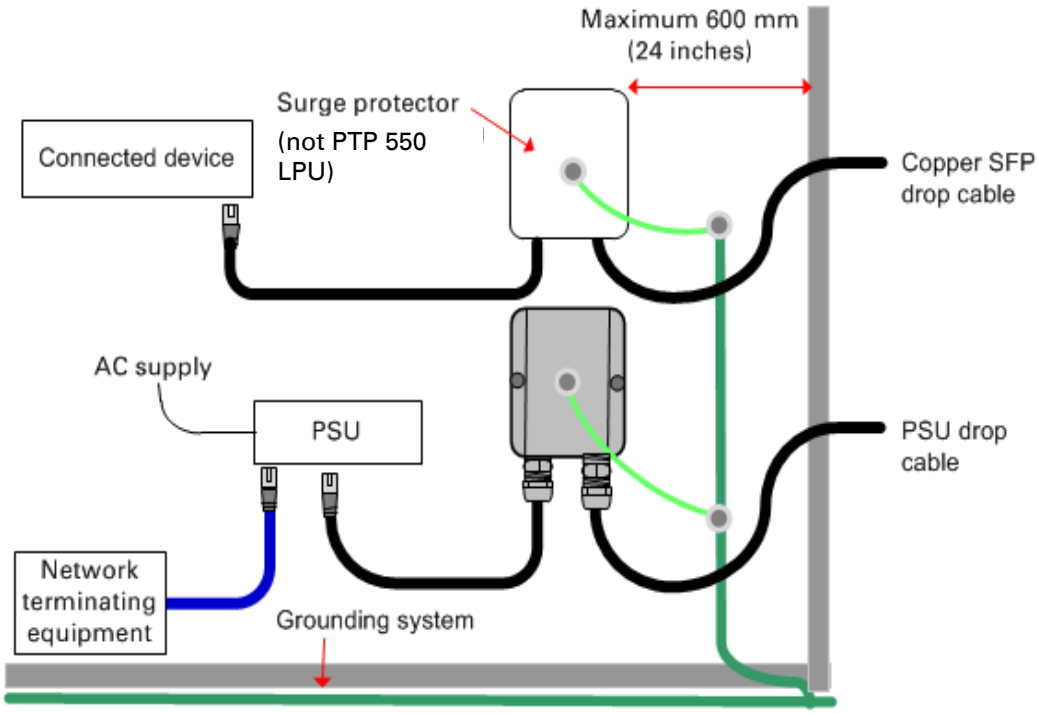

Radio spectrum planning

This section describes how to plan PTP 550 links to conform to the regulatory restrictions that apply in the country of operation.

Caution

It is the responsibility of the user to ensure that the PTP product is operated in accordance with local regulatory limits.

Note

Contact the applicable radio regulator to find out whether or not registration of the PTP 550 link is required.

General wireless specifications

Table 31 lists the wireless specifications that apply to all PTP 550 frequency bands. Table 32 lists the wireless specifications that are specific to a single frequency band.

Table 31 PTP 550 wireless specifications (all variants)

Item	Specification
Channel selection	Manual selection (fixed frequency) Dynamic spectrum optimization Dynamic frequency selection (DFS or DFS with DSO) is available in radar avoidance regions.
Manual power control	To avoid interference to other users of the band, maximum power can be set lower than the default power limit.
Integrated antenna type	23 dBi Flat plate antenna
Duplex schemes	Symmetric fixed, asymmetric fixed
Range	Line-of-Sight: 200 km (122 miles). Non-Line-of-Sight: 10 km (6 miles).
Over-the-air encryption	AES 128-bit
Error Correction	FEC

Table 32 PTP 550 wireless specifications (per frequency band)

Item	5.1 GHz	5.2 GHz	5.4 GHz	5.8 GHz
RF band (MHz)	5150–5250	5250–5350	5470–5725	5725–5875
Channel bandwidth (MHz)	20, 40, 80	20, 40, 80	20, 40, 80	20, 40, 80
Typical receiver noise	6 dB	6 dB	6 dB	6 dB
Typical antenna gain (integrated)	23 dBi	23 dBi	23 dBi	23 dBi
Antenna beamwidth (integrated)	8°	8°	8°	8°

Regulatory limits

Many countries impose EIRP limits (Allowed EIRP) on products operating in the bands used by the PTP 550 Series. For example, in the 5.4 GHz and 5.8 GHz bands, these limits are calculated as follows:

- In the 5.4 GHz band (5470 MHz to 5725 MHz), the EIRP must not exceed the lesser of 30 dBm or (17 + 10 x Log Channel width in MHz) dBm.
- In the 5.8 GHz band (5725 MHz to 5875 MHz), the EIRP must not exceed the lesser of 36 dBm or (23 + 10 x Log Channel width in MHz) dBm.

Some countries (for example the USA) impose conducted power limits on products operating in the 5.8 GHz band.

Conforming to the limits

Ensure the link is configured to conform to local regulatory requirements by installing license keys for the correct country. When using connectorized ODUs with external antennas, ensure that the antenna gain and feeder loss is configured correctly in the ODU.

Available spectrum

The available spectrum for operation depends on the regulatory band. When configured with the appropriate license key, the unit will only allow operation on those channels which are permitted by the regulations.

Certain regulations have allocated certain channels as unavailable for use:

- ETSI has allocated part of the 5.4 GHz band to weather radar.
- UK and some other European countries have allocated part of the 5.8 GHz band to Road Transport and Traffic Telematics (RTTT) systems.

The number and identity of channels barred by the license key and regulatory band is dependent on the channel bandwidth and channel raster selected.

Channel bandwidth

Select the required channel bandwidth for the link. The selection depends upon the regulatory band selected.

The wider the channel bandwidth, the greater the capacity. As narrower channel bandwidths take up less spectrum, selecting a narrow channel bandwidth may be a better choice when operating in locations where the spectrum is very busy.

Both ends of the link must be configured to operate on the same channel bandwidth.

Frequency selection

Regions without mandatory radar detection

In regions that do not mandate DFS, choose **DSO** or **Fixed Frequency**:

- **Dynamic Spectrum Optimization (DSO)**: In this mode, the unit monitors the spectrum looking for the channel with the lowest level of interference. Statistical techniques are used to select the most appropriate transmit and receive channels. The unit can be configured such that it operates in DSO mode, but does not operate on selected channels. This allows a frequency plan to be implemented in cases where multiple links are installed in close proximity.
- **Fixed Frequency**: In this mode, the unit must be configured with a single fixed transmit frequency and a single fixed receive frequency. These may set to the same value or to different values. This mode should only be considered in exceptional circumstances, for example where it is known that are no sources of interference on the selected channels.

Regions with mandatory radar detection

In regions that mandate DFS, the unit first ensures that there is no radar activity on a given channel for a period of 60 seconds before radiating on that channel. Once a channel has been selected for operation, the unit will continually monitor for radar activity on the operating channel. If detected, it will immediately cease radiating and attempt to find a new channel. In DFS regions, choose **DFS** or **DFS with DSO**:

- **Dynamic Frequency Selection (DFS)**: Once a channel is selected, the unit will only attempt to find an alternative channel if radar activity has been detected on the operating channel.
- **DFS with DSO**: In addition to switching channels on detection of radar, the unit will also switch to a channel which has a significantly lower level of interference than the current channel of operation. Before radiating on the newly selected channel, the unit must again ensure that there is no radar activity on the new channel for a period of 60 seconds. This mode therefore provides the benefit of switching to a channel with lower interference but at the expense of an outage of approximately 60 to 120 seconds. For this reason, the threshold for switching channels is greater than when DSO is operating in a non-radar region.

Radar avoidance requirements in the 5.4 GHz band are defined as follows:

- For the EU: in specification EN 301-893.

- For the US: in the specification FCC part 15.407 plus the later requirements covered in Important regulatory information on page 3.
- For Canada: in the specification RSS210 Annex 9.

Radar avoidance at 5.8 GHz is applicable to EU operation (not FCC/IC) and the requirements are defined in EN 302 502 v1.2.1.

Link planning

This section describes factors to be taken into account when planning links, such as range, obstacles path loss and throughput. LINKPlanner is recommended.

LINKPlanner

The Cambium LINKPlanner software and user guide may be downloaded from the support website (see Contacting Cambium Networks on page 1).

LINKPlanner imports path profiles and predicts data rates and reliability over the path. It allows the system designer to try different antenna heights and RF power settings. It outputs an installation report that defines the parameters to be used for configuration, alignment and operation. Use the installation report to compare predicted and actual link performance.

Range and obstacles

Calculate the range of the link and identify any obstacles that may affect radio performance.

Perform a survey to identify all the obstructions (such as trees or buildings) in the path and to assess the risk of interference. This information is necessary in order to achieve an accurate link feasibility assessment.

The PTP 550 Series is designed to operate in Non-Line-of-Sight (NLoS) and Line-of-Sight (LoS) environments. An NLOS environment is one in which there is no optical line-of-sight, that is, there are obstructions between the antennas.

The PTP 550 Series will operate at ranges from 100 m (330 ft) to 200 km (122 miles). Operation of the system will depend on obstacles in the path between the units. Operation at 40 km (25 miles) or above will require a near line-of-sight path. Operation at 100 m (330 ft) could be achieved with one unit totally obscured from the other unit, but with the penalty of transmitting at higher power in a non-optimal direction, thereby increasing interference in the band.

LoS links in radar regions

When planning an LoS link to operate in a radar detection region, ensure that receiver signal level is low enough to allow the PTP 550 to detect radar signals:

- With integrated antennas, the recommended minimum LoS operating range is 110 meters (360 ft) for 5.2 GHz or 5.4 GHz, and 185 meters (610 ft) for 5.8 GHz. Shorter operating ranges will lead to excessive receiver signal levels.
- With higher gain connectorized antennas, ensure the predicted receiver signal level (from LINKPlanner) is below -53 dBm (for 5.2 GHz or 5.4 GHz) or below -58 dBm (for 5.8 GHz).

LINKPlanner for synchronized networks

TDD synchronization should be planned using LINKPlanner. This will provide the necessary TDD frame parameter values which are required to complete a synchronized installation. Please refer to the *LINKPlanner User Guide*.

Path loss

Path loss is the amount of attenuation the radio signal undergoes between the two ends of the link. The path loss is the sum of the attenuation of the path if there were no obstacles in the way (Free Space Path Loss), the attenuation caused by obstacles (Excess Path Loss) and a margin to allow for possible fading of the radio signal (Fade Margin). The following calculation needs to be performed to judge whether a particular link can be installed:

$$L_{free\_space} + L_{excess} + L_{fade} + L_{seasonal} < L_{capability}$$

Where:	Is:
L_{free_space}	Free Space Path Loss (dB)
L_{excess}	Excess Path Loss (dB)
L_{fade}	Fade Margin Required (dB)
$L_{seasonal}$	Seasonal Fading (dB)
$L_{capability}$	Equipment Capability (dB)

Adaptive modulation

Adaptive modulation ensures that the highest throughput that can be achieved instantaneously will be obtained, taking account of propagation and interference. When the link has been installed, web pages provide information about the link loss currently measured by the equipment, both instantaneously and averaged. The averaged value will require maximum seasonal fading to be added, and then the radio reliability of the link can be computed.

For details of the system threshold, output power and link loss for each frequency band in all modulation modes for all available channel bandwidths, refer to System threshold on page 3-61.

Planning for connectorized units

This section describes factors to be taken into account when planning to use connectorized ODUs with external antennas in PTP 550 links.

When to install connectorized units

The majority of radio links can be successfully deployed with the integrated ODU. However the integrated units may not be sufficient in some areas, for example:

- Where the path is heavily obscured by dense woodland on an NLOS link.
- Where long LOS links (>23 km or >14 miles) are required.
- Where there are known to be high levels of interference.

LINKPlanner can be used to identify these areas of marginal performance.

In these areas, connectorized ODUs and external antennas should be used.

Choosing external antennas

When selecting external antennas, consider the following factors:

- The required antenna gain.
- Ease of mounting and alignment.
- Antenna polarization:
  - For a simple installation process, select one dual-polarization antenna (as the integrated antenna) at each end.
  - To achieve spatial diversity, select two single-polarization antennas at each end. Spatial diversity provides additional fade margin on very long LOS links where there is evidence of correlation of the fading characteristics on Vertical and Horizontal polarizations.

Note

Enter the antenna gain and cable loss into the Installation Wizard, if the country selected has an EIRP limit, the corresponding maximum transmit power will be calculated automatically by the unit.

Note

Under Industry Canada regulations, this radio transmitter may only operate using an antenna of a type and maximum (or lesser) gain approved for the transmitter by Industry Canada. To reduce potential radio interference to other users, the antenna type and its gain should be so chosen that the equivalent isotropically radiated power (EIRP) is not more than that necessary for successful communication.

Conformément à la réglementation d'Industrie Canada, le présent émetteur radio peut fonctionner avec une antenne d'un type et d'un gain maximal (ou inférieur) approuvé pour l'émetteur par Industrie Canada. Dans le but de réduire les risques de brouillage radioélectrique à l'intention des autres utilisateurs, il faut choisir le type d'antenne et son gain de sorte que la puissance isotrope rayonnée équivalente (p.i.r.e.) ne dépasse pas l'intensité nécessaire à l'établissement d'une communication satisfaisante.

Calculating RF cable length (5.8 GHz FCC only)

The 5.8 GHz band FCC approval for the product is based on tests with a cable loss between the ODU and antenna of not less than 1.2 dB. If cable loss is below 1.2 dB with a 1.3 m (4 ft) diameter external antenna, the connectorized PTP 550 may exceed the maximum radiated spurious emissions allowed under FCC 5.8 GHz rules.

Cable loss depends mainly upon cable type and length. To meet or exceed the minimum loss of 1.2 dB, use cables of the type and length specified in Table 33 (source: Times Microwave). This data excludes connector losses.

Table 33 RF cable lengths required to achieve 1.2 dB loss at 5.8 GHz

RF cable type	Minimum cable length
LMR100	0.6 m (1.9 ft)
LMR200	1.4 m (4.6 ft)
LMR300	2.2 m (7.3 ft)
LMR400	3.4 m (11.1 ft)
LMR600	5.0 m (16.5 ft)

Configuration options for TDD synchronization

This section describes the different configuration options that may be used for implementing TDD synchronization in the PTP 550 Series

Data network planning

This section describes factors to be considered when planning PTP 550 data networks.

Ethernet interfaces

The PTP 550 Ethernet ports conform to the specifications listed in Table 34.

Table 34 PTP 550 Ethernet bridging specifications

Ethernet Bridging	Specification
Protocol	IEEE802.1; IEEE802.1p; IEEE802.3 compatible
QoS	Three wireless interface priority queues
Interfaces	100BASE-TX, 1000BASE-T, 1000BASE-SX, 1000BASE-LX MDI/MDIX auto crossover supported
Max Ethernet frame size	9600 bytes
Service classes for traffic	3 classes

Practical Ethernet rates depend on network configuration and higher layer protocols. Over the air throughput is capped to the rate of the Ethernet interface at the receiving end of the link.

VLAN membership

Decide if the IP interface of the ODU management agent will be connected in a VLAN. If so, select the VLAN ID for this VLAN.

Use of a separate management VLAN is strongly recommended. Use of the management VLAN helps to ensure that the ODU management agent cannot be accessed by customers.

IP interface

Select the IP version for the IP interface of the ODU management agent. PTP 550 can operate in IPv4 mode, IPv6 mode, or in a dual IPv4/IPv6 mode. Choose one IPv4 address and/or one IPv6 address for the IP interface of the ODU management agent. The IP address or addresses must be unique and valid for the connected network segment and VLAN.

Find out the correct subnet mask (IPv4) or prefix length (IPv6) and gateway IP address for this network segment and VLAN.

Ensure that the design of the data network permits bidirectional routing of IP datagrams between network management systems and the ODUs. For example, ensure that the gateway IP address identifies a router or other gateway that provides access to the rest of the data network.

Green Ethernet switches

Do not connect PTP 550 units to Ethernet networking products that control the level of the transmitted Ethernet signal based on the measured length of the Ethernet link, for example Green Ethernet products manufactured by D-Link Corporation. The Ethernet interfaces in these networking products do not work correctly when connected directly to the PTP 550 PSU.

Network management planning

This section describes how to plan for PTP 550 links to be managed remotely using SNMP.

Planning for SNMP operation

The supported notifications are as follows:

- Cold start
- Wireless Link Up/Down
- Channel Change
- DFS Impulse Interference
- Authentication Failure
- Main PSU Port Up Down
- SFP Port Up Down

Ensure that the following MIBs are loaded on the network management system.

- PTP 550 Series proprietary MIB

Note

The proprietary MIBs are provided in the PTP 550 Series software download files in the support website (see Contacting Cambium Networks on page 1).

Enabling SNMP

Enable the SNMP interface for use by configuring the following attributes in the SNMP Configuration page:

- Read-Only Community String
- Read-Write Community String
- System Name
- System Description
- System Location
- Traps
- Trap Community String

Security planning

This section describes how to plan for PTP 550 links to operate in secure mode.

Planning for NTP operation

Note

PTP 550 does not have a battery-powered clock, so the set time is lost each time the ODU is powered down. To avoid the need to manually set the time after each reboot, use NTP server synchronization.

Before starting to configure Simple Network Time Protocol (NTP):

- Identify the time zone and daylight saving requirements that apply to the system.
- If NTP server synchronization is required, identify the IP address of one or two NTP servers.

System threshold

Use the following table to reference system threshold (dBm) for the PTP 550 system:

Table 35 5 GHz: system threshold (dBm)

Modulation mode	20 MHz	40 MHz	80 MHz
Lowest MCS	-96.6	-95.1	-93.3
Highest MCS	-93.5	-92.0	-90.2

Chapter 4: Legal and regulatory information

This chapter provides end user license agreements and regulatory notifications.

Caution

Intentional or unintentional changes or modifications to the equipment must not be made unless under the express consent of the party responsible for compliance. Any such modifications could void the user's authority to operate the equipment and will void the manufacturer's warranty.

Attention

Changements ou modifications Intentionnels ou non de l'équipement ne doivent pas être entrepris sans l'autorisation de l'organisme responsable de la déclaration de conformité. Ces modifications ou changements pourraient invalider le droit de l'utilisateur à utiliser cet appareil et annuleraient la garantie du fabricant.

The following topics are described in this chapter:

- Cambium Networks end user license agreement on page 4-2 contains the Cambium and third party license agreements for the PTP 550 Series products.
- Compliance with safety standards on page 4-115 lists the safety specifications against which the PTP 550 has been tested and certified. It also describes how to keep RF exposure within safe limits.
- Compliance with radio regulations on page 4-120 describes how the PTP 550 complies with the radio regulations that are in force in various countries, and contains notifications made to regulatory bodies for the PTP 550.

Cambium Networks end user license agreement

Definitions

In this Agreement, the word “Software” refers to the set of instructions for computers, in executable form and in any media, (which may include diskette, CD-ROM, downloadable internet, hardware, or firmware) licensed to you. The word “Documentation” refers to electronic or printed manuals and accompanying instructional aids licensed to you. The word “Product” refers to Cambium Networks’ fixed wireless broadband devices for which the Software and Documentation is licensed for use.

Acceptance of this agreement

In connection with Cambium Networks’ delivery of certain proprietary software or products containing embedded or pre-loaded proprietary software, or both, Cambium Networks is willing to license this certain proprietary software and the accompanying documentation to you only on the condition that you accept all the terms in this End User License Agreement (“Agreement”).

IF YOU DO NOT AGREE TO THE TERMS OF THIS AGREEMENT, DO NOT USE THE PRODUCT OR INSTALL THE SOFTWARE. INSTEAD, YOU MAY, FOR A FULL REFUND, RETURN THIS PRODUCT TO THE LOCATION WHERE YOU ACQUIRED IT OR PROVIDE WRITTEN VERIFICATION OF DELETION OF ALL COPIES OF THE SOFTWARE. ANY USE OF THE SOFTWARE, INCLUDING BUT NOT LIMITED TO USE ON THE PRODUCT, WILL CONSTITUTE YOUR ACCEPTANCE TO THE TERMS OF THIS AGREEMENT.

Grant of license

Cambium Networks Limited (“Cambium”) grants you (“Licensee” or “you”) a personal, nonexclusive, non-transferable license to use the Software and Documentation subject to the Conditions of Use set forth in “**Conditions of use**” and the terms and conditions of this Agreement. Any terms or conditions relating to the Software and Documentation appearing on the face or reverse side of any purchase order, purchase order acknowledgment or other order document that are different from, or in addition to, the terms of this Agreement will not be binding on the parties, even if payment is accepted.

Conditions of use

Any use of the Software and Documentation outside of the conditions set forth in this Agreement is strictly prohibited and will be deemed a breach of this Agreement.

1. Only you, your employees or agents may use the Software and Documentation. You will take all necessary steps to insure that your employees and agents abide by the terms of this Agreement.

2. You will use the Software and Documentation (i) only for your internal business purposes; (ii) only as described in the Software and Documentation; and (iii) in strict accordance with this Agreement.

3. You may use the Software and Documentation, provided that the use is in conformance with the terms set forth in this Agreement.

4. Portions of the Software and Documentation are protected by United States copyright laws, international treaty provisions, and other applicable laws. Therefore, you must treat the Software like any other copyrighted material (for example, a book or musical recording) except that you may either: (i) make 1 copy of the transportable part of the Software (which typically is supplied on diskette, CD-ROM, or downloadable internet), solely for back-up purposes; or (ii) copy the transportable part of the Software to a PC hard disk, provided you keep the original solely for back-up purposes. If the Documentation is in printed form, it may not be copied. If the Documentation is in electronic form, you may print out 1 copy, which then may not be copied. With regard to the copy made for backup or archival purposes, you agree to reproduce any Cambium Networks copyright notice, and other proprietary legends appearing thereon. Such copyright notice(s) may appear in any of several forms, including machine-readable form, and you agree to reproduce such notice in each form in which it appears, to the extent it is physically possible to do so. Unauthorized duplication of the Software or Documentation constitutes copyright infringement, and in the United States is punishable in federal court by fine and imprisonment.

5. You will not transfer, directly or indirectly, any product, technical data or software to any country for which the United States Government requires an export license or other governmental approval without first obtaining such license or approval.

Title and restrictions

If you transfer possession of any copy of the Software and Documentation to another party outside of the terms of this agreement, your license is automatically terminated. Title and copyrights to the Software and Documentation and any copies made by you remain with Cambium Networks and its licensors. You will not, and will not permit others to: (i) modify, translate, decompile, bootleg, reverse engineer, disassemble, or extract the inner workings of the Software or Documentation, (ii) copy the look-and-feel or functionality of the Software or Documentation; (iii) remove any proprietary notices, marks, labels, or logos from the Software or Documentation; (iv) rent or transfer all or some of the Software or Documentation to any other party without Cambium's prior written consent; or (v) utilize any computer software or hardware which is designed to defeat any copy protection device, should the Software and Documentation be equipped with such a protection device. If the Software and Documentation is provided on multiple types of media (such as diskette, CD-ROM, downloadable internet), then you will only use the medium which best meets your specific needs, and will not loan, rent, lease, or transfer the other media contained in the package without Cambium's written consent. Unauthorized copying of the Software or Documentation, or failure to comply with any of the provisions of this Agreement, will result in automatic termination of this license.

Confidentiality

You acknowledge that all Software and Documentation contain valuable proprietary information and trade secrets and that unauthorized or improper use of the Software and Documentation will result in irreparable harm to Cambium Networks for which monetary damages would be inadequate and for which Cambium Networks will be entitled to immediate injunctive relief. If applicable, you will limit access to the Software and Documentation to those of your employees and agents who need to use the Software and Documentation for your internal business purposes, and you will take appropriate action with those employees and agents to preserve the confidentiality of the Software and Documentation, using the same degree of care to avoid unauthorized or improper disclosure as you use for the protection of your own proprietary software, but in no event less than reasonable care.

You have no obligation to preserve the confidentiality of any proprietary information that: (i) was in the public domain at the time of disclosure; (ii) entered the public domain through no fault of yours; (iii) was given to you free of any obligation to keep it confidential; (iv) is independently developed by you; or (v) is disclosed as required by law provided that you notify Cambium Networks prior to such disclosure and provide Cambium Networks with a reasonable opportunity to respond.

Right to use Cambium's name

Except as required in "**Conditions of use**", you will not, during the term of this Agreement or thereafter, use any trademark of Cambium Networks, or any word or symbol likely to be confused with any Cambium Networks trademark, either alone or in any combination with another word or words.

Transfer

The Software and Documentation may not be transferred to another party without the express written consent of Cambium Networks, regardless of whether or not such transfer is accomplished by physical or electronic means. Cambium's consent may be withheld at its discretion and may be conditioned upon transferee paying all applicable license fees and agreeing to be bound by this Agreement.

Updates

During the first 12 months after purchase of a Product, or during the term of any executed Maintenance and Support Agreement for the Product, you are entitled to receive Updates. An "Update" means any code in any form which is a bug fix, patch, error correction, or minor enhancement, but excludes any major feature added to the Software. Updates are available for download at the support website.

Major features may be available from time to time for an additional license fee. If Cambium Networks makes available to you major features and no other end user license agreement is provided, then the terms of this Agreement will apply.

Maintenance

Except as provided above, Cambium Networks is not responsible for maintenance or field service of the Software under this Agreement.

Disclaimer

CAMBIUM NETWORKS DISCLAIMS ALL WARRANTIES OF ANY KIND, WHETHER EXPRESS, IMPLIED, STATUTORY, OR IN ANY COMMUNICATION WITH YOU. CAMBIUM NETWORKS SPECIFICALLY DISCLAIMS ANY WARRANTY INCLUDING THE IMPLIED WARRANTIES OF MERCHANTABILTY, NONINFRINGEMENT, OR FITNESS FOR A PARTICULAR PURPOSE. THE SOFTWARE AND DOCUMENTATION ARE PROVIDED "AS IS." CAMBIUM NETWORKS DOES NOT WARRANT THAT THE SOFTWARE WILL MEET YOUR REQUIREMENTS, OR THAT THE OPERATION OF THE SOFTWARE WILL BE UNINTERRUPTED OR ERROR FREE, OR THAT DEFECTS IN THE SOFTWARE WILL BE CORRECTED. CAMBIUM NETWORKS MAKES NO WARRANTY WITH RESPECT TO THE CORRECTNESS, ACCURACY, OR RELIABILITY OF THE SOFTWARE AND DOCUMENTATION. Some jurisdictions do not allow the exclusion of implied warranties, so the above exclusion may not apply to you.

Limitation of liability

IN NO EVENT SHALL CAMBIUM NETWORKS BE LIABLE TO YOU OR ANY OTHER PARTY FOR ANY DIRECT, INDIRECT, GENERAL, SPECIAL, INCIDENTAL, CONSEQUENTIAL, EXEMPLARY OR OTHER DAMAGE ARISING OUT OF THE USE OR INABILITY TO USE THE PRODUCT (INCLUDING, WITHOUT LIMITATION, DAMAGES FOR LOSS OF BUSINESS PROFITS, BUSINESS INTERRUPTION, LOSS OF BUSINESS INFORMATION OR ANY OTHER PECUNIARY LOSS, OR FROM ANY BREACH OF WARRANTY, EVEN IF CAMBIUM NETWORKS HAS BEEN ADVISED OF THE POSSIBILITY OF SUCH DAMAGES. (Some states do not allow the exclusion or limitation of incidental or consequential damages, so the above exclusion or limitation may not apply to you.) IN NO CASE SHALL CAMBIUM'S LIABILITY EXCEED THE AMOUNT YOU PAID FOR THE PRODUCT.

U.S. government

If you are acquiring the Product on behalf of any unit or agency of the U.S. Government, the following applies. Use, duplication, or disclosure of the Software and Documentation is subject to the restrictions set forth in subparagraphs (c) (1) and (2) of the Commercial Computer Software – Restricted Rights clause at FAR 52.227-19 (JUNE 1987), if applicable, unless being provided to the Department of Defense. If being provided to the Department of Defense, use, duplication, or disclosure of the Products is subject to the restricted rights set forth in subparagraph (c) (1) (ii) of the Rights in Technical Data and Computer Software clause at DFARS 252.227-7013 (OCT 1988), if applicable. Software and Documentation may or may not include a Restricted Rights notice, or other notice referring specifically to the terms and conditions of this Agreement. The terms and conditions of this Agreement will each continue to apply, but only to the extent that such terms and conditions are not inconsistent with the rights provided to you under the aforementioned provisions of the FAR and DFARS, as applicable to the particular procuring agency and procurement transaction.

Term of license

Your right to use the Software will continue in perpetuity unless terminated as follows. Your right to use the Software will terminate immediately without notice upon a breach of this Agreement by you. Within 30 days after termination of this Agreement, you will certify to Cambium Networks in writing that through your best efforts, and to the best of your knowledge, the original and all copies, in whole or in part, in any form, of the Software and all related material and Documentation, have been destroyed, except that, with prior written consent from Cambium Networks, you may retain one copy for archival or backup purposes. You may not sublicense, assign or transfer the license or the Product, except as expressly provided in this Agreement. Any attempt to otherwise sublicense, assign or transfer any of the rights, duties or obligations hereunder is null and void.

Governing law

This Agreement is governed by the laws of the United States of America to the extent that they apply and otherwise by the laws of the State of Illinois.

Assignment

This agreement may not be assigned by you without Cambium's prior written consent.

Survival of provisions

The parties agree that where the context of any provision indicates an intent that it survives the term of this Agreement, then it will survive.

Entire agreement

This agreement contains the parties' entire agreement regarding your use of the Software and may be amended only in writing signed by both parties, except that Cambium Networks may modify this Agreement as necessary to comply with applicable laws.

Third party software

The software may contain one or more items of Third-Party Software supplied by other third-party suppliers. The terms of this Agreement govern your use of any Third-Party Software UNLESS A SEPARATE THIRD-PARTY SOFTWARE LICENSE IS INCLUDED, IN WHICH CASE YOUR USE OF THE THIRD-PARTY SOFTWARE WILL THEN BE GOVERNED BY THE SEPARATE THIRD-PARTY LICENSE.

Source Code Requests

For at least three (3) years from the date of your receipt of this copy of the software, Cambium will give to any party who contacts us at the contact information provided below, for a charge of $10, a copy of the complete corresponding source code for this version of the software.

Cambium Networks

Atrium, 3800 Golf Rd #360

Rolling Meadows, IL 60008

Aquila

Copyright (c) 2002-2010, Atheros Communications Inc.
Copyright (c) 2002-2005 Sam Leffler, Errno Consulting
Copyright (C) 2011 Denali Software Inc. All rights reserved

Permission to use, copy, modify, and/or distribute this software for any purpose with or without fee is hereby granted, provided that the above copyright notice and this permission notice appear in all copies.

THE SOFTWARE IS PROVIDED "AS IS" AND THE AUTHOR DISCLAIMS ALL WARRANTIES
WITH REGARD TO THIS SOFTWARE INCLUDING ALL IMPLIED WARRANTIES OF MERCHANTABILITY AND FITNESS. IN NO EVENT SHALL THE AUTHOR BE LIABLE FOR
ANY SPECIAL, DIRECT, INDIRECT, OR CONSEQUENTIAL DAMAGES OR ANY DAMAGES
WHATSOEVER RESULTING FROM LOSS OF USE, DATA OR PROFITS, WHETHER IN AN
ACTION OF CONTRACT, NEGLIGENCE OR OTHER TORTIOUS ACTION, ARISING OUT OF
OR IN CONNECTION WITH THE USE OR PERFORMANCE OF THIS SOFTWARE.

==========

Redistribution and use in source and binary forms are permitted provided that the following conditions are met:

1. The materials contained herein are unmodified and are used unmodified.
2. Redistributions of source code must retain the above copyright notice, this list of conditions and the following NO ''WARRANTY'' disclaimer below (''Disclaimer''), without modification.
3. Redistributions in binary form must reproduce at minimum a disclaimer similar to the Disclaimer below and any redistribution must be conditioned upon including a substantially similar Disclaimer requirement for further binary redistribution.
4. Neither the names of the above-listed copyright holders nor the names of any contributors may be used to endorse or promote

product derived from this software without specific prior written permission.

NO WARRANTY
THIS SOFTWARE IS PROVIDED BY THE COPYRIGHT HOLDERS AND CONTRIBUTORS ''AS IS'' AND ANY EXPRESS OR IMPLIED WARRANTIES, INCLUDING, BUT NOT LIMITED TO, THE IMPLIED WARRANTIES OF NONINFRINGEMENT,MERCHANTIBILITY AND FITNESS FOR A PARTICULAR PURPOSE ARE DISCLAIMED. IN NO EVENT SHALL THE COPYRIGHT HOLDERS OR CONTRIBUTORS BE LIABLE FOR SPECIAL, EXEMPLARY, OR CONSEQUENTIAL DAMAGES (INCLUDING, BUT NOT LIMITED TO, PROCUREMENT OF SUBSTITUTE GOODS OR SERVICES; LOSS OF USE, DATA, OR PROFITS; OR BUSINESS INTERRUPTION) HOWEVER CAUSED AND ON ANY THEORY OF LIABILITY, WHETHER IN CONTRACT, STRICT LIABILITY, OR TORT (INCLUDING NEGLIGENCE OR OTHERWISE) ARISING IN ANY WAY OUT
OF THE USE OF THIS SOFTWARE, EVEN IF ADVISED OF THE POSSIBILITY OF SUCH DAMAGES.

(C) Copyright 2002-2006
Wolfgang Denk, DENX Software Engineering, wd@denx.de.
#
See file CREDITS for list of people who contributed to this
project.
#
This program is free software; you can redistribute it and/or
modify it under the terms of the GNU General Public License as
published by the Free Software Foundation; either version 2 of
the License, or (at your option) any later version.
#
This program is distributed in the hope that it will be useful,
but WITHOUT ANY WARRANTY; without even the implied warranty of
MERCHANTABILITY or FITNESS FOR A PARTICULAR PURPOSE. See the
GNU General Public License for more details.
#
You should have received a copy of the GNU General Public License
along with this program; if not, write to the Free Software
Foundation, Inc., 59 Temple Place, Suite 330, Boston,
MA 02111-1307 USA
#

Linux Kernel

Copyright (c) 1989, 1991 Free Software Foundation

NOTE! This copyright does *not* cover user programs that use kernel services by normal system calls - this is merely considered normal use of the kernel, and does *not* fall under the heading of "derived work". Also note that the GPL below is copyrighted by the Free Software Foundation, but the instance of code that it refers to (the Linux kernel) is copyrighted by me and others who actually wrote it.

Also note that the only valid version of the GPL as far as the kernel is concerned is _this_ particular version of the license (ie v2, not v2.2 or v3.x or whatever), unless explicitly otherwise stated.

Linus Torvalds

GNU GENERAL PUBLIC LICENSE
Version 2, June 1991

Copyright (C) 1989, 1991 Free Software Foundation, Inc.
51 Franklin St, Fifth Floor, Boston, MA 02110-1301 USA
Everyone is permitted to copy and distribute verbatim copies
of this license document, but changing it is not allowed.

See full license text on page 4-25.

```
# (C) Copyright 2002-2006
# Wolfgang Denk, DENX Software Engineering, wd@denx.de.
#
# See file CREDITS for list of people who contributed to this
# project.
#
# This program is free software; you can redistribute it and/or
# modify it under the terms of the GNU General Public License as
# published by the Free Software Foundation; either version 2 of
# the License, or (at your option) any later version.
#
# This program is distributed in the hope that it will be useful,
# but WITHOUT ANY WARRANTY; without even the implied warranty of
# MERCHANTABILITY or FITNESS FOR A PARTICULAR PURPOSE. See the
# GNU General Public License for more details.
#
# You should have received a copy of the GNU General Public License
# along with this program; if not, write to the Free Software
# Foundation, Inc., 59 Temple Place, Suite 330, Boston,
# MA 02111-1307 USA
```

	#
gpio_keys	/* * Driver for keys on GPIO lines capable of generating interrupts. * * Copyright 2005 Phil Blundell * * This program is free software; you can redistribute it and/or modify * it under the terms of the GNU General Public License version 2 as * published by the Free Software Foundation. */ # (C) Copyright 2002-2006 # Wolfgang Denk, DENX Software Engineering, wd@denx.de. # # See file CREDITS for list of people who contributed to this # project. # # This program is free software; you can redistribute it and/or # modify it under the terms of the GNU General Public License as # published by the Free Software Foundation; either version 2 of # the License, or (at your option) any later version. # # This program is distributed in the hope that it will be useful, # but WITHOUT ANY WARRANTY; without even the implied warranty of # MERCHANTABILITY or FITNESS FOR A PARTICULAR PURPOSE. See the

	# GNU General Public License for more details. # # You should have received a copy of the GNU General Public License # along with this program; if not, write to the Free Software # Foundation, Inc., 59 Temple Place, Suite 330, Boston, # MA 02111-1307 USA #
OpenWrt	GNU GENERAL PUBLIC LICENSE Version 2, June 1991 Copyright (C) 1989, 1991 Free Software Foundation, Inc. 59 Temple Place, Suite 330, Boston, MA 02111-1307 USA Everyone is permitted to copy and distribute verbatim copies of this license document, but changing it is not allowed. See full license text on page 4-25. # (C) Copyright 2002-2006 # Wolfgang Denk, DENX Software Engineering, wd@denx.de. # # See file CREDITS for list of people who contributed to this # project. # # This program is free software; you can redistribute it and/or # modify it under the terms of the GNU General Public License as # published by the Free Software Foundation; either version 2 of # the License, or (at your option) any later version. # # This program is distributed in the hope that it will be useful, # but WITHOUT ANY WARRANTY; without even the implied warranty of # MERCHANTABILITY or FITNESS FOR A PARTICULAR PURPOSE. See the # GNU General Public License for more details. #

	# You should have received a copy of the GNU General Public License # along with this program; if not, write to the Free Software # Foundation, Inc., 59 Temple Place, Suite 330, Boston, # MA 02111-1307 USA #
uboot	Copyright (c) 2007 Wolfgan Denk, DENIX Software Engeneering, wd@denix.de # (C) Copyright 2000 - 2005 # Wolfgang Denk, DENX Software Engineering, wd@denx.de. # # See file CREDITS for list of people who contributed to this # project. # # This program is free software; you can redistribute it and/or # modify it under the terms of the GNU General Public License as # published by the Free Software Foundation; either version 2 of # the License, or (at your option) any later version. # # This program is distributed in the hope that it will be useful, # but WITHOUT ANY WARRANTY; without even the implied warranty of # MERCHANTABILITY or FITNESS FOR A PARTICULAR PURPOSE. See the # GNU General Public License for more details. # # You should have received a copy of the GNU General Public License # along with this program; if not, write to the Free Software # Foundation, Inc., 59 Temple Place, Suite 330, Boston, # MA 02111-1307 USA See full license text on page 4-25.
uboot (Force products released in 2017)	NOTE! This copyright does *not* cover the so-called "standalone" applications that use U-Boot services by means of the jump table provided by U-Boot exactly for this purpose - this is merely considered normal use of U-Boot, and does *not* fall under the heading of "derived work". The header files "include/image.h" and "include/asm-*/u-boot.h" define interfaces to U-Boot. Including these (unmodified) header files in another file is considered normal use of U-Boot, and does *not* fall under the heading of "derived work". Also note that the GPL below is copyrighted by the Free Software Foundation, but the instance of code that it refers to (the U-Boot source code) is copyrighted by me and others who actually wrote it. -- Wolfgang Denk ========== ==== GNU GENERAL PUBLIC LICENSE Version 2, June 1991 Copyright (C) 1989, 1991 Free Software Foundation, Inc.

	59 Temple Place, Suite 330, Boston, MA 02111-1307 USA Everyone is permitted to copy and distribute verbatim copies of this license document, but changing it is not allowed. See full license text on page 4-25. /* * (C) Copyright 2000-2009 * Wolfgang Denk, DENX Software Engineering, wd@denx.de. * * See file CREDITS for list of people who contributed to this * project. * * This program is free software; you can redistribute it and/or * modify it under the terms of the GNU General Public License as * published by the Free Software Foundation; either version 2 of * the License, or (at your option) any later version. * * This program is distributed in the hope that it will be useful, * but WITHOUT ANY WARRANTY; without even the implied warranty of * MERCHANTABILITY or FITNESS FOR A PARTICULAR PURPOSE. See the * GNU General Public License for more details. * * You should have received a copy of the GNU General Public License * along with this program; if not, write to the Free Software * Foundation, Inc., 59 Temple Place, Suite 330, Boston, * MA 02111-1307 USA */ /* * Command Processor Table */
jQuery	The MIT License (MIT) Copyright (c) 2013 The jQuery Foundation. Permission is hereby granted, free of charge, to any person obtaining a copy of this software and associated documentation files (the "Software"), to deal in the Software without restriction, including without limitation the rights to use, copy, modify, merge, publish, distribute, sublicense, and/or sell copies of the Software, and to permit persons to whom the Software is furnished to do so, subject to the following conditions: The above copyright notice and this permission notice shall be included in all copies or substantial portions of the Software. THE SOFTWARE IS PROVIDED "AS IS", WITHOUT WARRANTY OF ANY KIND, EXPRESS OR IMPLIED, INCLUDING BUT NOT LIMITED TO THE WARRANTIES OF MERCHANTABILITY, FITNESS FOR A PARTICULAR PURPOSE AND NONINFRINGEMENT. IN NO EVENT SHALL THE AUTHORS OR COPYRIGHT HOLDERS BE LIABLE FOR ANY CLAIM, DAMAGES OR OTHER LIABILITY, WHETHER IN AN ACTION OF CONTRACT, TORT OR OTHERWISE, ARISING FROM, OUT OF OR IN CONNECTION WITH THE SOFTWARE OR THE USE OR OTHER

	DEALINGS IN THE SOFTWARE. # (C) Copyright 2002-2006 # Wolfgang Denk, DENX Software Engineering, wd@denx.de. # # See file CREDITS for list of people who contributed to this # project. # # This program is free software; you can redistribute it and/or # modify it under the terms of the GNU General Public License as # published by the Free Software Foundation; either version 2 of # the License, or (at your option) any later version. # # This program is distributed in the hope that it will be useful, # but WITHOUT ANY WARRANTY; without even the implied warranty of # MERCHANTABILITY or FITNESS FOR A PARTICULAR PURPOSE. See the # GNU General Public License for more details. # # You should have received a copy of the GNU General Public License # along with this program; if not, write to the Free Software # Foundation, Inc., 59 Temple Place, Suite 330, Boston, # MA 02111-1307 USA #
Data-Driven Document	Copyright (c) 2012, Michael Bostock Copyright (c) 2013, Michael Bostock All rights reserved. Redistribution and use in source and binary forms, with or without modification, are permitted provided that the following conditions are met: * Redistributions of source code must retain the above copyright notice, this list of conditions and the following disclaimer. * Redistributions in binary form must reproduce the above copyright notice, this list of conditions and the following disclaimer in the documentation and/or other materials provided with the distribution. * The name Michael Bostock may not be used to endorse or promote products derived from this software without specific prior written permission. THIS SOFTWARE IS PROVIDED BY THE COPYRIGHT HOLDERS AND CONTRIBUTORS "AS IS" AND ANY EXPRESS OR IMPLIED WARRANTIES, INCLUDING, BUT NOT LIMITED TO, THE IMPLIED WARRANTIES OF MERCHANTABILITY AND FITNESS FOR A PARTICULAR PURPOSE ARE DISCLAIMED. IN NO EVENT SHALL MICHAEL BOSTOCK BE LIABLE FOR ANY DIRECT, INDIRECT, INCIDENTAL, SPECIAL, EXEMPLARY, OR CONSEQUENTIAL DAMAGES (INCLUDING, BUT NOT LIMITED TO, PROCUREMENT OF SUBSTITUTE

GOODS OR SERVICES; LOSS OF USE, DATA, OR PROFITS; OR BUSINESS INTERRUPTION) HOWEVER CAUSED AND ON ANY THEORY OF LIABILITY, WHETHER IN CONTRACT, STRICT LIABILITY, OR TORT (INCLUDING NEGLIGENCE OR OTHERWISE) ARISING IN ANY WAY OUT OF THE USE OF THIS SOFTWARE, EVEN IF ADVISED OF THE POSSIBILITY OF SUCH DAMAGE.

```
# (C) Copyright 2002-2006
# Wolfgang Denk, DENX Software Engineering, wd@denx.de.
#
# See file CREDITS for list of people who contributed to this
# project.
#
# This program is free software; you can redistribute it and/or
# modify it under the terms of the GNU General Public License as
# published by the Free Software Foundation; either version 2 of
# the License, or (at your option) any later version.
#
# This program is distributed in the hope that it will be useful,
# but WITHOUT ANY WARRANTY; without even the implied warranty of
# MERCHANTABILITY or FITNESS FOR A PARTICULAR PURPOSE. See the
# GNU General Public License for more details.
#
# You should have received a copy of the GNU General Public License
# along with this program; if not, write to the Free Software
# Foundation, Inc., 59 Temple Place, Suite 330, Boston,
# MA 02111-1307 USA
#
```

AjaxFileUpload

The MIT License (MIT)

Copyright 2013-2014 powered by PHPLETTER

Permission is hereby granted, free of charge, to any person obtaining a copy of this software and associated documentation files (the "Software"), to deal in the Software without restriction, including without limitation the rights to use, copy, modify, merge, publish, distribute, sublicense, and/or sell copies of the Software, and to permit persons to whom the Software is furnished to do so, subject to the following conditions:

The above copyright notice and this permission notice shall be included in all copies or substantial portions of the Software.

THE SOFTWARE IS PROVIDED "AS IS", WITHOUT WARRANTY OF ANY KIND, EXPRESS OR IMPLIED, INCLUDING BUT NOT LIMITED TO THE WARRANTIES OF MERCHANTABILITY, FITNESS FOR A PARTICULAR PURPOSE AND NONINFRINGEMENT. IN NO EVENT SHALL THE AUTHORS OR COPYRIGHT HOLDERS BE LIABLE FOR ANY CLAIM, DAMAGES OR OTHER LIABILITY, WHETHER IN AN ACTION OF CONTRACT, TORT OR OTHERWISE, ARISING FROM, OUT OF OR IN CONNECTION WITH THE SOFTWARE OR THE USE OR OTHER DEALINGS IN THE SOFTWARE.

(C) Copyright 2002-2006
Wolfgang Denk, DENX Software Engineering, wd@denx.de.
#
See file CREDITS for list of people who contributed to this
project.
#
This program is free software; you can redistribute it and/or
modify it under the terms of the GNU General Public License as
published by the Free Software Foundation; either version 2 of
the License, or (at your option) any later version.
#
This program is distributed in the hope that it will be useful,
but WITHOUT ANY WARRANTY; without even the implied warranty of
MERCHANTABILITY or FITNESS FOR A PARTICULAR PURPOSE. See the
GNU General Public License for more details.
#
You should have received a copy of the GNU General Public License
along with this program; if not, write to the Free Software
Foundation, Inc., 59 Temple Place, Suite 330, Boston,
MA 02111-1307 USA
#

jquery.caret	The MIT License (MIT) Copyright (c) 2010 C. F., Wong Permission is hereby granted, free of charge, to any person obtaining a copy of this software and associated documentation files (the "Software"), to deal in the Software without restriction, including without limitation the rights to use, copy, modify, merge, publish, distribute, sublicense, and/or sell copies of the Software, and to permit persons to whom the Software is furnished to do so, subject to the following conditions: The above copyright notice and this permission notice shall be included in all copies or substantial portions of the Software. THE SOFTWARE IS PROVIDED "AS IS", WITHOUT WARRANTY OF ANY KIND, EXPRESS OR IMPLIED, INCLUDING BUT NOT LIMITED TO THE WARRANTIES OF MERCHANTABILITY, FITNESS FOR A PARTICULAR PURPOSE AND NONINFRINGEMENT. IN NO EVENT SHALL THE AUTHORS OR COPYRIGHT HOLDERS BE LIABLE FOR ANY CLAIM, DAMAGES OR OTHER LIABILITY, WHETHER IN AN ACTION OF CONTRACT, TORT OR OTHERWISE, ARISING FROM, OUT OF OR IN CONNECTION WITH THE SOFTWARE OR THE USE OR OTHER DEALINGS IN THE SOFTWARE. # (C) Copyright 2002-2006 # Wolfgang Denk, DENX Software Engineering, wd@denx.de. # # See file CREDITS for list of people who contributed to this # project. # # This program is free software; you can redistribute it and/or # modify it under the terms of the GNU General Public License as # published by the Free Software Foundation; either version 2 of # the License, or (at your option) any later version. # # This program is distributed in the hope that it will be useful, # but WITHOUT ANY WARRANTY; without even the implied warranty of # MERCHANTABILITY or FITNESS FOR A PARTICULAR PURPOSE. See the # GNU General Public License for more details. # # You should have received a copy of the GNU General Public License # along with this program; if not, write to the Free Software # Foundation, Inc., 59 Temple Place, Suite 330, Boston, # MA 02111-1307 USA #
jquery.cookie	Copyright 2013 Klaus Hartl Permission is hereby granted, free of charge, to any person obtaining a copy of this software and associated documentation files (the

	"Software"), to deal in the Software without restriction, including without limitation the rights to use, copy, modify, merge, publish, distribute, sublicense, and/or sell copies of the Software, and to permit persons to whom the Software is furnished to do so, subject to the following conditions: The above copyright notice and this permission notice shall be included in all copies or substantial portions of the Software. THE SOFTWARE IS PROVIDED "AS IS", WITHOUT WARRANTY OF ANY KIND, EXPRESS OR IMPLIED, INCLUDING BUT NOT LIMITED TO THE WARRANTIES OF MERCHANTABILITY, FITNESS FOR A PARTICULAR PURPOSE AND NONINFRINGEMENT. IN NO EVENT SHALL THE AUTHORS OR COPYRIGHT HOLDERS BE LIABLE FOR ANY CLAIM, DAMAGES OR OTHER LIABILITY, WHETHER IN AN ACTION OF CONTRACT, TORT OR OTHERWISE, ARISING FROM, OUT OF OR IN CONNECTION WITH THE SOFTWARE OR THE USE OR OTHER DEALINGS IN THE SOFTWARE. # (C) Copyright 2002-2006 # Wolfgang Denk, DENX Software Engineering, wd@denx.de. # # See file CREDITS for list of people who contributed to this # project. # # This program is free software; you can redistribute it and/or # modify it under the terms of the GNU General Public License as # published by the Free Software Foundation; either version 2 of # the License, or (at your option) any later version. # # This program is distributed in the hope that it will be useful, # but WITHOUT ANY WARRANTY; without even the implied warranty of # MERCHANTABILITY or FITNESS FOR A PARTICULAR PURPOSE. See the # GNU General Public License for more details. # # You should have received a copy of the GNU General Public License # along with this program; if not, write to the Free Software # Foundation, Inc., 59 Temple Place, Suite 330, Boston, # MA 02111-1307 USA #
json2.js	http://www.JSON.org/json2.js 2010-08-25 Public Domain. NO WARRANTY EXPRESSED OR IMPLIED. USE AT YOUR OWN RISK. See http://www.JSON.org/js.html

This code must be minified before deployment.
See http://javascript.crockford.com/jsmin.html

USE YOUR OWN COPY. IT IS EXTREMELY UNWISE TO LOAD CODE FROM SERVERS YOU DO NOT CONTROL.

(C) Copyright 2002-2006
Wolfgang Denk, DENX Software Engineering, wd@denx.de.
#
See file CREDITS for list of people who contributed to this
project.
#
This program is free software; you can redistribute it and/or
modify it under the terms of the GNU General Public License as
published by the Free Software Foundation; either version 2 of
the License, or (at your option) any later version.
#
This program is distributed in the hope that it will be useful,
but WITHOUT ANY WARRANTY; without even the implied warranty of
MERCHANTABILITY or FITNESS FOR A PARTICULAR PURPOSE. See the
GNU General Public License for more details.
#
You should have received a copy of the GNU General Public License
along with this program; if not, write to the Free Software
Foundation, Inc., 59 Temple Place, Suite 330, Boston,
MA 02111-1307 USA
#

jquery.noty

Copyright (c) 2012 Nedim Arabacı

Permission is hereby granted, free of charge, to any person obtaining a copy of this software and associated documentation files (the "Software"), to deal in the Software without restriction, including without limitation the rights to use, copy, modify, merge, publish, distribute, sublicense, and/or sell copies of the Software, and to permit persons to whom the Software is furnished to do so, subject to the following conditions:

The above copyright notice and this permission notice shall be included in all copies or substantial portions of the Software.

THE SOFTWARE IS PROVIDED "AS IS", WITHOUT WARRANTY OF ANY KIND, EXPRESS OR IMPLIED, INCLUDING BUT NOT LIMITED TO THE WARRANTIES OF MERCHANTABILITY, FITNESS FOR A PARTICULAR PURPOSE AND NONINFRINGEMENT. IN NO EVENT SHALL THE AUTHORS OR COPYRIGHT HOLDERS BE LIABLE FOR ANY CLAIM, DAMAGES OR OTHER LIABILITY, WHETHER IN AN ACTION OF CONTRACT, TORT OR OTHERWISE, ARISING FROM, OUT OF OR IN CONNECTION WITH THE SOFTWARE OR THE USE OR OTHER DEALINGS IN THE SOFTWARE.

(C) Copyright 2002-2006
Wolfgang Denk, DENX Software Engineering, wd@denx.de.
#
See file CREDITS for list of people who contributed to this
project.
#
This program is free software; you can redistribute it and/or
modify it under the terms of the GNU General Public License as
published by the Free Software Foundation; either version 2 of
the License, or (at your option) any later version.
#
This program is distributed in the hope that it will be useful,
but WITHOUT ANY WARRANTY; without even the implied warranty of
MERCHANTABILITY or FITNESS FOR A PARTICULAR PURPOSE. See the
GNU General Public License for more details.
#
You should have received a copy of the GNU General Public License
along with this program; if not, write to the Free Software
Foundation, Inc., 59 Temple Place, Suite 330, Boston,
MA 02111-1307 USA
#

SlickGrid

Copyright (c) 2009-2012 Michael Leibman

Copyright (c) 2010 Michael Leibman

http://github.com/mleibman/slickgrid

Permission is hereby granted, free of charge, to any person obtaining a copy of this software and associated documentation files (the "Software"), to deal in the Software without restriction, including without limitation the rights to use, copy, modify, merge, publish, distribute, sublicense, and/or sell copies of the Software, and to permit persons to whom the Software is furnished to do so, subject to the following conditions:

The above copyright notice and this permission notice shall be included in all copies or substantial portions of the Software.

THE SOFTWARE IS PROVIDED "AS IS", WITHOUT WARRANTY OF ANY KIND, EXPRESS OR IMPLIED, INCLUDING BUT NOT LIMITED TO THE WARRANTIES OF MERCHANTABILITY, FITNESS FOR A PARTICULAR PURPOSE AND NONINFRINGEMENT. IN NO EVENT SHALL THE AUTHORS OR COPYRIGHT HOLDERS BE LIABLE FOR ANY CLAIM, DAMAGES OR OTHER LIABILITY, WHETHER IN AN ACTION OF CONTRACT, TORT OR OTHERWISE, ARISING FROM, OUT OF OR IN CONNECTION WITH THE SOFTWARE OR THE USE OR OTHER DEALINGS IN THE SOFTWARE.

(C) Copyright 2002-2006
Wolfgang Denk, DENX Software Engineering, wd@denx.de.
#
See file CREDITS for list of people who contributed to this
project.
#
This program is free software; you can redistribute it and/or
modify it under the terms of the GNU General Public License as
published by the Free Software Foundation; either version 2 of
the License, or (at your option) any later version.
#
This program is distributed in the hope that it will be useful,
but WITHOUT ANY WARRANTY; without even the implied warranty of
MERCHANTABILITY or FITNESS FOR A PARTICULAR PURPOSE. See the
GNU General Public License for more details.
#
You should have received a copy of the GNU General Public License
along with this program; if not, write to the Free Software
Foundation, Inc., 59 Temple Place, Suite 330, Boston,
MA 02111-1307 USA
#

jquery.event.drag

The MIT License (MIT)

Copyright (c) 2010 Three Dub Media

Permission is hereby granted, free of charge, to any person obtaining a copy of this software and associated documentation files (the "Software"), to deal in the Software without restriction, including without limitation the rights to use, copy, modify, merge, publish, distribute, sublicense, and/or sell copies of the Software, and to permit persons to whom the Software is furnished to do so, subject to the following conditions:

The above copyright notice and this permission notice shall be included in all copies or substantial portions of the Software.

THE SOFTWARE IS PROVIDED "AS IS", WITHOUT WARRANTY OF ANY KIND, EXPRESS OR IMPLIED, INCLUDING BUT NOT LIMITED TO THE WARRANTIES OF MERCHANTABILITY, FITNESS FOR A PARTICULAR PURPOSE AND NONINFRINGEMENT. IN NO EVENT SHALL THE AUTHORS OR COPYRIGHT HOLDERS BE LIABLE FOR ANY CLAIM, DAMAGES OR OTHER LIABILITY, WHETHER IN AN ACTION OF CONTRACT, TORT OR OTHERWISE, ARISING FROM, OUT OF OR IN CONNECTION WITH THE SOFTWARE OR THE USE OR OTHER DEALINGS IN THE SOFTWARE.

(C) Copyright 2002-2006
Wolfgang Denk, DENX Software Engineering, wd@denx.de.
#
See file CREDITS for list of people who contributed to this
project.
#
This program is free software; you can redistribute it and/or
modify it under the terms of the GNU General Public License as
published by the Free Software Foundation; either version 2 of
the License, or (at your option) any later version.
#
This program is distributed in the hope that it will be useful,
but WITHOUT ANY WARRANTY; without even the implied warranty of
MERCHANTABILITY or FITNESS FOR A PARTICULAR PURPOSE. See the
GNU General Public License for more details.
#
You should have received a copy of the GNU General Public License
along with this program; if not, write to the Free Software
Foundation, Inc., 59 Temple Place, Suite 330, Boston,
MA 02111-1307 USA
#

IE9.js

The MIT License (MIT)

Copyright (c) 2004-2010, Dean Edwards

Permission is hereby granted, free of charge, to any person obtaining a copy of this software and associated documentation files (the "Software"), to deal in the Software without restriction, including without limitation the rights to use, copy, modify, merge, publish, distribute, sublicense, and/or sell copies of the Software, and to permit persons to whom the Software is furnished to do so, subject to the following conditions:

The above copyright notice and this permission notice shall be included in all copies or substantial portions of the Software.

THE SOFTWARE IS PROVIDED "AS IS", WITHOUT WARRANTY OF ANY KIND, EXPRESS OR IMPLIED, INCLUDING BUT NOT LIMITED TO THE WARRANTIES OF MERCHANTABILITY, FITNESS FOR A PARTICULAR PURPOSE AND NONINFRINGEMENT. IN NO EVENT SHALL THE AUTHORS OR COPYRIGHT HOLDERS BE LIABLE FOR ANY CLAIM, DAMAGES OR OTHER LIABILITY, WHETHER IN AN ACTION OF CONTRACT, TORT OR OTHERWISE, ARISING FROM, OUT OF OR IN CONNECTION WITH THE SOFTWARE OR THE USE OR OTHER DEALINGS IN THE SOFTWARE.

(C) Copyright 2002-2006
Wolfgang Denk, DENX Software Engineering, wd@denx.de.
#
See file CREDITS for list of people who contributed to this
project.
#
This program is free software; you can redistribute it and/or
modify it under the terms of the GNU General Public License as
published by the Free Software Foundation; either version 2 of
the License, or (at your option) any later version.
#
This program is distributed in the hope that it will be useful,
but WITHOUT ANY WARRANTY; without even the implied warranty of
MERCHANTABILITY or FITNESS FOR A PARTICULAR PURPOSE. See the
GNU General Public License for more details.
#
You should have received a copy of the GNU General Public License
along with this program; if not, write to the Free Software
Foundation, Inc., 59 Temple Place, Suite 330, Boston,
MA 02111-1307 USA
#

busybox

--- A note on GPL versions

BusyBox is distributed under version 2 of the General Public License (included in its entirety, below). Version 2 is the only version of this license which this version of BusyBox (or modified versions derived from this one) may be distributed under.

GNU GENERAL PUBLIC LICENSE
Version 2, June 1991

Copyright (C) 1989, 1991 Free Software Foundation, Inc.
51 Franklin St, Fifth Floor, Boston, MA 02110-1301 USA
Everyone is permitted to copy and distribute verbatim copies
of this license document, but changing it is not allowed.

Preamble

The licenses for most software are designed to take away your freedom to share and change it. By contrast, the GNU General Public License is intended to guarantee your freedom to share and change free software--to make sure the software is free for all its users. This General Public License applies to most of the Free Software Foundation's software and to any other program whose authors commit to using it. (Some other Free Software Foundation software is covered by the GNU Lesser General Public License instead.) You can apply it to your programs, too.

When we speak of free software, we are referring to freedom, not price. Our General Public Licenses are designed to make sure that you have the freedom to distribute copies of free software (and charge for this service if you wish), that you receive source code or can get it if you want it, that you can change the software or use pieces of it in new free programs; and that you know you can do these things.

To protect your rights, we need to make restrictions that forbid anyone to deny you these rights or to ask you to surrender the rights. These restrictions translate to certain responsibilities for you if you distribute copies of the software, or if you modify it.

For example, if you distribute copies of such a program, whether gratis or for a fee, you must give the recipients all the rights that you have. You must make sure that they, too, receive or can get the source code. And you must show them these terms so they know their rights.

We protect your rights with two steps: (1) copyright the software, and (2) offer you this license which gives you legal permission to copy, distribute and/or modify the software.

Also, for each author's protection and ours, we want to make certain that everyone

understands that there is no warranty for this free software. If the software is modified by someone else and passed on, we want its recipients to know that what they have is not the original, so that any problems introduced by others will not reflect on the original authors' reputations.

Finally, any free program is threatened constantly by software patents. We wish to avoid the danger that redistributors of a free program will individually obtain patent licenses, in effect making the program proprietary. To prevent this, we have made it clear that any patent must be licensed for everyone's free use or not licensed at all.

The precise terms and conditions for copying, distribution and modification follow.

TERMS AND CONDITIONS FOR COPYING, DISTRIBUTION AND MODIFICATION

0. This License applies to any program or other work which contains a notice placed by the copyright holder saying it may be distributed under the terms of this General Public License. The "Program", below, refers to any such program or work, and a "work based on the Program" means either the Program or any derivative work under copyright law: that is to say, a work containing the Program or a portion of it, either verbatim or with modifications and/or translated into another language. (Hereinafter, translation is included without limitation in the term "modification".) Each licensee is addressed as "you".

Activities other than copying, distribution and modification are not covered by this License; they are outside its scope. The act of running the Program is not restricted, and the output from the Program is covered only if its contents constitute a work based on the Program (independent of having been made by running the Program). Whether that is true depends on what the Program does.

1. You may copy and distribute verbatim copies of the Program's source code as you receive it, in any medium, provided that you conspicuously and appropriately publish on each copy an appropriate copyright notice and disclaimer of warranty; keep intact all the notices that refer to this License and to the absence of any warranty; and give any other recipients of the Program a copy of this License along with the Program.

You may charge a fee for the physical act of transferring a copy, and you may at your option offer warranty protection in exchange for a fee.

2. You may modify your copy or copies of the Program or any portion of it, thus forming a work based on the Program, and copy and distribute such modifications or work under the terms of Section 1 above, provided that you also meet all of these conditions:

a) You must cause the modified files to carry prominent notices stating

that you changed the files and the date of any change.

b) You must cause any work that you distribute or publish, that in whole or in part contains or is derived from the Program or any part thereof, to be licensed as a whole at no charge to all third parties under the terms of this License.

c) If the modified program normally reads commands interactively when run, you must cause it, when started running for such interactive use in the most ordinary way, to print or display an announcement including an appropriate copyright notice and a notice that there is no warranty (or else, saying that you provide a warranty) and that users may redistribute the program under these conditions, and telling the user how to view a copy of this License. (Exception: if the Program itself is interactive but does not normally print such an announcement, your work based on the Program is not required to print an announcement.)

These requirements apply to the modified work as a whole. If identifiable sections of that work are not derived from the Program, and can be reasonably considered independent and separate works in themselves, then this License, and its terms, do not apply to those sections when you distribute them as separate works. But when you distribute the same sections as part of a whole which is a work based on the Program, the distribution of the whole must be on the terms of this License, whose permissions for other licensees extend to the entire whole, and thus to each and every part regardless of who wrote it.

Thus, it is not the intent of this section to claim rights or contest your rights to work written entirely by you; rather, the intent is to exercise the right to control the distribution of derivative or collective works based on the Program.

In addition, mere aggregation of another work not based on the Program with the Program (or with a work based on the Program) on a volume of a storage or distribution medium does not bring the other work under the scope of this License.

3. You may copy and distribute the Program (or a work based on it, under Section 2) in object code or executable form under the terms of Sections 1 and 2 above provided that you also do one of the following:

a) Accompany it with the complete corresponding machine-readable source code, which must be distributed under the terms of Sections 1 and 2 above on a medium customarily used for software interchange; or,

b) Accompany it with a written offer, valid for at least three years, to give

any third party, for a charge no more than your cost of physically performing source distribution, a complete machine-readable copy of the corresponding source code, to be distributed under the terms of Sections 1 and 2 above on a medium customarily used for software interchange; or,

c) Accompany it with the information you received as to the offer to distribute corresponding source code. (This alternative is allowed only for noncommercial distribution and only if you received the program in object code or executable form with such an offer, in accord with Subsection b above.)

The source code for a work means the preferred form of the work for making modifications to it. For an executable work, complete source code means all the source code for all modules it contains, plus any associated interface definition files, plus the scripts used to control compilation and installation of the executable. However, as a special exception, the source code distributed need not include anything that is normally distributed (in either source or binary form) with the major components (compiler, kernel, and so on) of the operating system on which the executable runs, unless that component itself accompanies the executable.

If distribution of executable or object code is made by offering access to copy from a designated place, then offering equivalent access to copy the source code from the same place counts as distribution of the source code, even though third parties are not compelled to copy the source along with the object code.

4. You may not copy, modify, sublicense, or distribute the Program except as expressly provided under this License. Any attempt otherwise to copy, modify, sublicense or distribute the Program is void, and will automatically terminate your rights under this License. However, parties who have received copies, or rights, from you under this License will not have their licenses terminated so long as such parties remain in full compliance.

5. You are not required to accept this License, since you have not signed it. However, nothing else grants you permission to modify or distribute the Program or its derivative works. These actions are prohibited by law if you do not accept this License. Therefore, by modifying or distributing the Program (or any work based on the Program), you indicate your acceptance of this License to do so, and all its terms and conditions for copying, distributing or modifying the Program or works based on it.

6. Each time you redistribute the Program (or any work based on the Program), the recipient automatically receives a license from the original licensor to copy, distribute or modify the Program subject to these terms and conditions. You may

not impose any further restrictions on the recipients' exercise of the rights granted herein. You are not responsible for enforcing compliance by third parties to this License.

7. If, as a consequence of a court judgment or allegation of patent infringement or for any other reason (not limited to patent issues), conditions are imposed on you (whether by court order, agreement or otherwise) that contradict the conditions of this License, they do not excuse you from the conditions of this License. If you cannot distribute so as to satisfy simultaneously your obligations under this License and any other pertinent obligations, then as a consequence you may not distribute the Program at all. For example, if a patent license would not permit royalty-free redistribution of the Program by all those who receive copies directly or indirectly through you, then the only way you could satisfy both it and this License would be to refrain entirely from distribution of the Program.

If any portion of this section is held invalid or unenforceable under any particular circumstance, the balance of the section is intended to apply and the section as a whole is intended to apply in other circumstances.

It is not the purpose of this section to induce you to infringe any patents or other property right claims or to contest validity of any such claims; this section has the sole purpose of protecting the integrity of the free software distribution system, which is implemented by public license practices. Many people have made generous contributions to the wide range of software distributed through that system in reliance on consistent application of that system; it is up to the author/donor to decide if he or she is willing to distribute software through any other system and a licensee cannot impose that choice.

This section is intended to make thoroughly clear what is believed to be a consequence of the rest of this License.

8. If the distribution and/or use of the Program is restricted in certain countries either by patents or by copyrighted interfaces, the original copyright holder who places the Program under this License may add an explicit geographical distribution limitation excluding those countries, so that distribution is permitted only in or among countries not thus excluded. In such case, this License incorporates the limitation as if written in the body of this License.

9. The Free Software Foundation may publish revised and/or new versions of the General Public License from time to time. Such new versions will be similar in spirit to the present version, but may differ in detail to address new problems or concerns.

Each version is given a distinguishing version number. If the Program specifies a version number of this License which applies to it and "any later version", you have the option of following the terms and conditions either of that version or of any

later version published by the Free Software Foundation. If the Program does not specify a version number of this License, you may choose any version ever published by the Free Software Foundation.

10. If you wish to incorporate parts of the Program into other free programs whose distribution conditions are different, write to the author to ask for permission. For software which is copyrighted by the Free Software Foundation, write to the Free Software Foundation; we sometimes make exceptions for this. Our decision will be guided by the two goals of preserving the free status of all derivatives of our free software and of promoting the sharing and reuse of software generally.

NO WARRANTY

11. BECAUSE THE PROGRAM IS LICENSED FREE OF CHARGE, THERE IS NO WARRANTY FOR THE PROGRAM, TO THE EXTENT PERMITTED BY APPLICABLE LAW. EXCEPT WHEN OTHERWISE STATED IN WRITING THE COPYRIGHT HOLDERS AND/OR OTHER PARTIES PROVIDE THE PROGRAM "AS IS" WITHOUT WARRANTY OF ANY KIND, EITHER EXPRESSED OR IMPLIED, INCLUDING, BUT NOT LIMITED TO, THE IMPLIED WARRANTIES OF MERCHANTABILITY AND FITNESS FOR A PARTICULAR PURPOSE. THE ENTIRE RISK AS TO THE QUALITY AND PERFORMANCE OF THE PROGRAM IS WITH YOU. SHOULD THE PROGRAM PROVE DEFECTIVE, YOU ASSUME THE COST OF ALL NECESSARY SERVICING, REPAIR OR CORRECTION.

12. IN NO EVENT UNLESS REQUIRED BY APPLICABLE LAW OR AGREED TO IN WRITING WILL ANY COPYRIGHT HOLDER, OR ANY OTHER PARTY WHO MAY MODIFY AND/OR REDISTRIBUTE THE PROGRAM AS PERMITTED ABOVE, BE LIABLE TO YOU FOR DAMAGES, INCLUDING ANY GENERAL, SPECIAL, INCIDENTAL OR CONSEQUENTIAL DAMAGES ARISING OUT OF THE USE OR INABILITY TO USE THE PROGRAM (INCLUDING BUT NOT LIMITED TO LOSS OF DATA OR DATA BEING RENDERED INACCURATE OR LOSSES SUSTAINED BY YOU OR THIRD PARTIES OR A FAILURE OF THE PROGRAM TO OPERATE WITH ANY OTHER PROGRAMS), EVEN IF SUCH HOLDER OR OTHER PARTY HAS BEEN ADVISED OF THE POSSIBILITY OF SUCH DAMAGES.

END OF TERMS AND CONDITIONS

```
# (C) Copyright 2002-2006
# Wolfgang Denk, DENX Software Engineering, wd@denx.de.
#
# See file CREDITS for list of people who contributed to this
# project.
#
# This program is free software; you can redistribute it and/or
# modify it under the terms of the GNU General Public License as
```

	# published by the Free Software Foundation; either version 2 of # the License, or (at your option) any later version. # # This program is distributed in the hope that it will be useful, # but WITHOUT ANY WARRANTY; without even the implied warranty of # MERCHANTABILITY or FITNESS FOR A PARTICULAR PURPOSE. See the # GNU General Public License for more details. # # You should have received a copy of the GNU General Public License # along with this program; if not, write to the Free Software # Foundation, Inc., 59 Temple Place, Suite 330, Boston, # MA 02111-1307 USA #
dnsmasq	# This program is free software; you can redistribute it and/or modify # it under the terms of the GNU General Public License as published by # the Free Software Foundation; version 2 dated June, 1991, or # (at your option) version 3 dated 29 June, 2007. See full license text on page 4-25. # (C) Copyright 2002-2006 # Wolfgang Denk, DENX Software Engineering, wd@denx.de. # # See file CREDITS for list of people who contributed to this # project. # # This program is free software; you can redistribute it and/or # modify it under the terms of the GNU General Public License as # published by the Free Software Foundation; either version 2 of # the License, or (at your option) any later version. # # This program is distributed in the hope that it will be useful, # but WITHOUT ANY WARRANTY; without even the implied warranty of # MERCHANTABILITY or FITNESS FOR A PARTICULAR PURPOSE. See the # GNU General Public License for more details. # # You should have received a copy of the GNU General Public License # along with this program; if not, write to the Free Software # Foundation, Inc., 59 Temple Place, Suite 330, Boston, # MA 02111-1307 USA #

dropbear

Dropbear contains a number of components from different sources, hence there are a few licenses and authors involved. All licenses are fairly non-restrictive.

The majority of code is written by Matt Johnston, under the license below. Portions of the client-mode work are (c) 2004 Mihnea Stoenescu, under the same license:

Copyright (c) 2002-2008 Matt Johnston
Portions copyright (c) 2004 Mihnea Stoenescu
All rights reserved.

Permission is hereby granted, free of charge, to any person obtaining a copy of this software and associated documentation files (the "Software"), to deal in the Software without restriction, including without limitation the rights to use, copy, modify, merge, publish, distribute, sublicense, and/or sell copies of the Software, and to permit persons to whom the Software is furnished to do so, subject to the following conditions:

The above copyright notice and this permission notice shall be included in all copies or substantial portions of the Software.

THE SOFTWARE IS PROVIDED "AS IS", WITHOUT WARRANTY OF ANY KIND, EXPRESS OR IMPLIED, INCLUDING BUT NOT LIMITED TO THE WARRANTIES OF MERCHANTABILITY, FITNESS FOR A PARTICULAR PURPOSE AND NONINFRINGEMENT. IN NO EVENT SHALL THE AUTHORS OR COPYRIGHT HOLDERS BE LIABLE FOR ANY CLAIM, DAMAGES OR OTHER LIABILITY, WHETHER IN AN ACTION OF CONTRACT, TORT OR OTHERWISE, ARISING FROM, OUT OF OR IN CONNECTION WITH THE SOFTWARE OR THE USE OR OTHER DEALINGS IN THE SOFTWARE.

=====

LibTomCrypt and LibTomMath are written by Tom St Denis, and are Public Domain.

=====

sshpty.c is taken from OpenSSH 3.5p1,
Copyright (c) 1995 Tatu Ylonen <ylo@cs.hut.fi>, Espoo, Finland
All rights reserved
"As far as I am concerned, the code I have written for this software can be used freely for any purpose. Any derived versions of this software must be clearly marked as such, and if the derived work is incompatible with the protocol description in the RFC file, it must be called by a name other than "ssh" or "Secure Shell". "

=====

loginrec.c

loginrec.h
atomicio.h
atomicio.c
and strlcat() (included in util.c) are from OpenSSH 3.6.1p2, and are licensed under the 2 point BSD license.

loginrec is written primarily by Andre Lucas, atomicio.c by Theo de Raadt.

strlcat() is (c) Todd C. Miller

=====

Import code in keyimport.c is modified from PuTTY's import.c, licensed as follows:

PuTTY is copyright 1997-2003 Simon Tatham.

Portions copyright Robert de Bath, Joris van Rantwijk, Delian Delchev, Andreas Schultz, Jeroen Massar, Wez Furlong, Nicolas Barry, Justin Bradford, and CORE SDI S.A.

Permission is hereby granted, free of charge, to any person obtaining a copy of this software and associated documentation files (the "Software"), to deal in the Software without restriction, including without limitation the rights to use, copy, modify, merge, publish, distribute, sublicense, and/or sell copies of the Software, and to permit persons to whom the Software is furnished to do so, subject to the following conditions:

The above copyright notice and this permission notice shall be included in all copies or substantial portions of the Software.

THE SOFTWARE IS PROVIDED "AS IS", WITHOUT WARRANTY OF ANY KIND, EXPRESS OR IMPLIED, INCLUDING BUT NOT LIMITED TO THE WARRANTIES OF MERCHANTABILITY, FITNESS FOR A PARTICULAR PURPOSE AND NONINFRINGEMENT. IN NO EVENT SHALL THE COPYRIGHT HOLDERS BE LIABLE FOR ANY CLAIM, DAMAGES OR OTHER LIABILITY, WHETHER IN AN ACTION OF CONTRACT, TORT OR OTHERWISE, ARISING FROM, OUT OF OR IN CONNECTION WITH THE SOFTWARE OR THE USE OR OTHER DEALINGS IN THE SOFTWARE.

(C) Copyright 2002-2006
Wolfgang Denk, DENX Software Engineering, wd@denx.de.
#
See file CREDITS for list of people who contributed to this
project.
#
This program is free software; you can redistribute it and/or
modify it under the terms of the GNU General Public License as
published by the Free Software Foundation; either version 2 of

	# the License, or (at your option) any later version. # # This program is distributed in the hope that it will be useful, # but WITHOUT ANY WARRANTY; without even the implied warranty of # MERCHANTABILITY or FITNESS FOR A PARTICULAR PURPOSE. See the # GNU General Public License for more details. # # You should have received a copy of the GNU General Public License # along with this program; if not, write to the Free Software # Foundation, Inc., 59 Temple Place, Suite 330, Boston, # MA 02111-1307 USA #
ebtables	Copyright (C) 1999 Paul `Rusty' Russell & Michael J. Neuling Copyright (C) 2001-2002 Bart De Schuymer All code in this package, including the code from the extensions, is released under the GPL license, which you find hereafter. GNU GENERAL PUBLIC LICENSE Version 2, June 1991 Copyright (C) 1989, 1991 Free Software Foundation, Inc. 675 Mass Ave, Cambridge, MA 02139, USA Everyone is permitted to copy and distribute verbatim copies of this license document, but changing it is not allowed. See full license text on page 4-25. # (C) Copyright 2002-2006 # Wolfgang Denk, DENX Software Engineering, wd@denx.de. # # See file CREDITS for list of people who contributed to this # project. # # This program is free software; you can redistribute it and/or # modify it under the terms of the GNU General Public License as # published by the Free Software Foundation; either version 2 of # the License, or (at your option) any later version. # # This program is distributed in the hope that it will be useful, # but WITHOUT ANY WARRANTY; without even the implied warranty of # MERCHANTABILITY or FITNESS FOR A PARTICULAR PURPOSE. See the # GNU General Public License for more details. # # You should have received a copy of the GNU General Public License # along with this program; if not, write to the Free Software # Foundation, Inc., 59 Temple Place, Suite 330, Boston,

	# MA 02111-1307 USA #
eventlog	Copyright (c) 2003 BalaBit IT Ltd. Redistribution and use in source and binary forms, with or without modification, are permitted provided that the following conditions are met: 1. Redistributions of source code must retain the above copyright notice, this list of conditions and the following disclaimer. 2. Redistributions in binary form must reproduce the above copyright notice, this list of conditions and the following disclaimer in the documentation and/or other materials provided with the distribution. 3. Neither the name of BalaBit nor the names of its contributors may be used to endorse or promote products derived from this software without specific prior written permission. THIS SOFTWARE IS PROVIDED BY BALABIT AND CONTRIBUTORS ``AS IS'' AND ANY EXPRESS OR IMPLIED WARRANTIES, INCLUDING, BUT NOT LIMITED TO, THE IMPLIED WARRANTIES OF MERCHANTABILITY AND FITNESS FOR A PARTICULAR PURPOSE ARE DISCLAIMED. IN NO EVENT SHALL THE AUTHOR OR CONTRIBUTORS BE LIABLE FOR ANY DIRECT, INDIRECT, INCIDENTAL, SPECIAL, EXEMPLARY, OR CONSEQUENTIAL DAMAGES (INCLUDING, BUT NOT LIMITED TO, PROCUREMENT OF SUBSTITUTE GOODS OR SERVICES; LOSS OF USE, DATA, OR PROFITS; OR BUSINESS INTERRUPTION) HOWEVER CAUSED AND ON ANY THEORY OF LIABILITY, WHETHER IN CONTRACT, STRICT LIABILITY, OR TORT (INCLUDING NEGLIGENCE OR OTHERWISE) ARISING IN ANY WAY OUT OF THE USE OF THIS SOFTWARE, EVEN IF ADVISED OF THE POSSIBILITY OF SUCH DAMAGE. # (C) Copyright 2002-2006 # Wolfgang Denk, DENX Software Engineering, wd@denx.de. # # See file CREDITS for list of people who contributed to this # project. # # This program is free software; you can redistribute it and/or # modify it under the terms of the GNU General Public License as # published by the Free Software Foundation; either version 2 of # the License, or (at your option) any later version. # # This program is distributed in the hope that it will be useful, # but WITHOUT ANY WARRANTY; without even the implied warranty of # MERCHANTABILITY or FITNESS FOR A PARTICULAR PURPOSE. See the # GNU General Public License for more details. #

	# You should have received a copy of the GNU General Public License # along with this program; if not, write to the Free Software # Foundation, Inc., 59 Temple Place, Suite 330, Boston, # MA 02111-1307 USA #
firewall	# Copyright (C) 2009-2010 OpenWrt.org # (C) Copyright 2002-2006 # Wolfgang Denk, DENX Software Engineering, wd@denx.de. # # See file CREDITS for list of people who contributed to this # project. # # This program is free software; you can redistribute it and/or # modify it under the terms of the GNU General Public License as # published by the Free Software Foundation; either version 2 of # the License, or (at your option) any later version. # # This program is distributed in the hope that it will be useful, # but WITHOUT ANY WARRANTY; without even the implied warranty of # MERCHANTABILITY or FITNESS FOR A PARTICULAR PURPOSE. See the # GNU General Public License for more details. # # You should have received a copy of the GNU General Public License # along with this program; if not, write to the Free Software # Foundation, Inc., 59 Temple Place, Suite 330, Boston, # MA 02111-1307 USA #
glib2	Copyright (C) 2007-2011 OpenWrt.org Copyright (C) 1994, 1995, 1996, 1997, 1998, 1999, 2000, 2001, 2002, 2003, 2004, 2005, 2006, 2007, 2008, 2009 Free Software Foundation, Inc. Copyright © 2004 Scott James Remnant <scott@netsplit.com>. Copyright (c) 1997-2006 University of Cambridge. Copyright © 2009 Codethink Limited Copyright (C) 2008-2010 Red Hat, Inc. Copyright (C) 2008 Hans Breuer Copyright (C) 2008, 2010 Collabora, Ltd. GNU LIBRARY GENERAL PUBLIC LICENSE Version 2, June 1991 Copyright (C) 1991 Free Software Foundation, Inc. 59 Temple Place, Suite 330, Boston, MA 02111-1307 USA Everyone is permitted to copy and distribute verbatim copies of this license document, but changing it is not allowed. [This is the first released version of the library GPL. It is numbered 2 because it goes with version 2 of the ordinary GPL.]

	See full license text on page 4-25. # (C) Copyright 2002-2006 # Wolfgang Denk, DENX Software Engineering, wd@denx.de. # # See file CREDITS for list of people who contributed to this # project. # # This program is free software; you can redistribute it and/or # modify it under the terms of the GNU General Public License as # published by the Free Software Foundation; either version 2 of # the License, or (at your option) any later version. # # This program is distributed in the hope that it will be useful, # but WITHOUT ANY WARRANTY; without even the implied warranty of # MERCHANTABILITY or FITNESS FOR A PARTICULAR PURPOSE. See the # GNU General Public License for more details. # # You should have received a copy of the GNU General Public License # along with this program; if not, write to the Free Software # Foundation, Inc., 59 Temple Place, Suite 330, Boston, # MA 02111-1307 USA #
hostapd	Copyright (c) 2002-2011, Jouni Malinen <j@w1.fi> and contributors All Rights Reserved. These programs are dual-licensed under both the GPL version 2 and BSD license (the one with advertisement clause removed). Either license may be used at your option. This package may include either wpa_supplicant, hostapd, or both. See README file respective subdirectories (wpa_supplicant/README or hostapd/README) for more details. See full license text on page 4-25. # (C) Copyright 2002-2006 # Wolfgang Denk, DENX Software Engineering, wd@denx.de. # # See file CREDITS for list of people who contributed to this # project. # # This program is free software; you can redistribute it and/or # modify it under the terms of the GNU General Public License as # published by the Free Software Foundation; either version 2 of # the License, or (at your option) any later version.

	# # This program is distributed in the hope that it will be useful, # but WITHOUT ANY WARRANTY; without even the implied warranty of # MERCHANTABILITY or FITNESS FOR A PARTICULAR PURPOSE. See the # GNU General Public License for more details. # # You should have received a copy of the GNU General Public License # along with this program; if not, write to the Free Software # Foundation, Inc., 59 Temple Place, Suite 330, Boston, # MA 02111-1307 USA #
hotplug	GNU GENERAL PUBLIC LICENSE Version 2, June 1991 See full license text on page 4-25. # (C) Copyright 2002-2006 # Wolfgang Denk, DENX Software Engineering, wd@denx.de. # # See file CREDITS for list of people who contributed to this # project. # # This program is free software; you can redistribute it and/or # modify it under the terms of the GNU General Public License as # published by the Free Software Foundation; either version 2 of # the License, or (at your option) any later version. # # This program is distributed in the hope that it will be useful, # but WITHOUT ANY WARRANTY; without even the implied warranty of # MERCHANTABILITY or FITNESS FOR A PARTICULAR PURPOSE. See the # GNU General Public License for more details. # # You should have received a copy of the GNU General Public License # along with this program; if not, write to the Free Software # Foundation, Inc., 59 Temple Place, Suite 330, Boston, # MA 02111-1307 USA #
iperf	Copyright 1999, 2000, 2001, 2002, 2003, 2004 The Board of Trustees of the University of Illinois All rights reserved Permission is hereby granted, free of charge, to any person obtaining a copy of this software (Iperf) and associated documentation files (the "Software"), to deal in the Software without restriction, including without limitation the rights to use, copy, modify, merge, publish, distribute, sublicense, and/or sell copies of the Software, and to permit persons to whom the Software is furnished to do so, subject to the following conditions:

	Redistributions of source code must retain the above copyright notice, this list of conditions and the following disclaimers. Redistributions in binary form must reproduce the above copyright notice, this list of conditions and the following disclaimers in the documentation and/or other materials provided with the distribution. Neither the names of the University of Illinois, NCSA, nor the names of its contributors may be used to endorse or promote products derived from this Software without specific prior written permission. THE SOFTWARE IS PROVIDED "AS IS", WITHOUT WARRANTY OF ANY KIND, EXPRESS OR IMPLIED, INCLUDING BUT NOT LIMITED TO THE WARRANTIES OF MERCHANTABILITY, FITNESS FOR A PARTICULAR PURPOSE AND NONINFRINGEMENT. IN NO EVENT SHALL THE CONTIBUTORS OR COPYRIGHT HOLDERS BE LIABLE FOR ANY CLAIM, DAMAGES OR OTHER LIABILITY, WHETHER IN AN ACTION OF CONTRACT, TORT OR OTHERWISE, ARISING FROM, OUT OF OR IN CONNECTION WITH THE SOFTWARE OR THE USE OR OTHER DEALINGS IN THE SOFTWARE. # (C) Copyright 2002-2006 # Wolfgang Denk, DENX Software Engineering, wd@denx.de. # # See file CREDITS for list of people who contributed to this # project. # # This program is free software; you can redistribute it and/or # modify it under the terms of the GNU General Public License as # published by the Free Software Foundation; either version 2 of # the License, or (at your option) any later version. # # This program is distributed in the hope that it will be useful, # but WITHOUT ANY WARRANTY; without even the implied warranty of # MERCHANTABILITY or FITNESS FOR A PARTICULAR PURPOSE. See the # GNU General Public License for more details. # # You should have received a copy of the GNU General Public License # along with this program; if not, write to the Free Software # Foundation, Inc., 59 Temple Place, Suite 330, Boston, # MA 02111-1307 USA #
iproute2	GNU GENERAL PUBLIC LICENSE Version 2, June 1991 Copyright (C) 1989, 1991 Free Software Foundation, Inc. 51 Franklin St, Fifth Floor, Boston, MA 02110-1301 USA Everyone is permitted to copy and distribute verbatim copies of this license document, but changing it is not allowed.

	See full license text on page 4-25. # (C) Copyright 2002-2006 # Wolfgang Denk, DENX Software Engineering, wd@denx.de. # # See file CREDITS for list of people who contributed to this # project. # # This program is free software; you can redistribute it and/or # modify it under the terms of the GNU General Public License as # published by the Free Software Foundation; either version 2 of # the License, or (at your option) any later version. # # This program is distributed in the hope that it will be useful, # but WITHOUT ANY WARRANTY; without even the implied warranty of # MERCHANTABILITY or FITNESS FOR A PARTICULAR PURPOSE. See the # GNU General Public License for more details. # # You should have received a copy of the GNU General Public License # along with this program; if not, write to the Free Software # Foundation, Inc., 59 Temple Place, Suite 330, Boston, # MA 02111-1307 USA #
iptables	GNU GENERAL PUBLIC LICENSE Version 2, June 1991 Copyright (C) 1989, 1991 Free Software Foundation, Inc. 675 Mass Ave, Cambridge, MA 02139, USA Everyone is permitted to copy and distribute verbatim copies of this license document, but changing it is not allowed. See full license text on page 4-25. # (C) Copyright 2002-2006 # Wolfgang Denk, DENX Software Engineering, wd@denx.de. # # See file CREDITS for list of people who contributed to this # project. # # This program is free software; you can redistribute it and/or # modify it under the terms of the GNU General Public License as # published by the Free Software Foundation; either version 2 of # the License, or (at your option) any later version. # # This program is distributed in the hope that it will be useful, # but WITHOUT ANY WARRANTY; without even the implied warranty of # MERCHANTABILITY or FITNESS FOR A PARTICULAR PURPOSE. See the # GNU General Public License for more details.

	# # You should have received a copy of the GNU General Public License # along with this program; if not, write to the Free Software # Foundation, Inc., 59 Temple Place, Suite 330, Boston, # MA 02111-1307 USA #
iputils	/* * Copyright (c) 1989 The Regents of the University of California. * All rights reserved. * * This code is derived from software contributed to Berkeley by * Mike Muuss. * * Redistribution and use in source and binary forms, with or without * modification, are permitted provided that the following conditions * are met: * 1. Redistributions of source code must retain the above copyright * notice, this list of conditions and the following disclaimer. * 2. Redistributions in binary form must reproduce the above copyright * notice, this list of conditions and the following disclaimer in the * documentation and/or other materials provided with the distribution. * 3. All advertising materials mentioning features or use of this software * must display the following acknowledgement: * This product includes software developed by the University of * California, Berkeley and its contributors. * 4. Neither the name of the University nor the names of its contributors * may be used to endorse or promote products derived from this software * without specific prior written permission. * * THIS SOFTWARE IS PROVIDED BY THE REGENTS AND CONTRIBUTORS ``AS IS'' AND ANY EXPRESS OR IMPLIED WARRANTIES, INCLUDING, BUT NOT LIMITED TO, THE IMPLIED WARRANTIES OF MERCHANTABILITY AND FITNESS FOR A PARTICULAR PURPOSE ARE DISCLAIMED. IN NO EVENT SHALL THE REGENTS OR CONTRIBUTORS BE LIABLE FOR ANY DIRECT, INDIRECT, INCIDENTAL, SPECIAL, EXEMPLARY, OR CONSEQUENTIAL DAMAGES (INCLUDING, BUT NOT LIMITED TO, PROCUREMENT OF SUBSTITUTE GOODS OR SERVICES; LOSS OF USE, DATA, OR PROFITS; OR BUSINESS INTERRUPTION) HOWEVER CAUSED AND ON ANY THEORY OF LIABILITY, WHETHER IN CONTRACT, STRICT LIABILITY, OR TORT (INCLUDING NEGLIGENCE OR OTHERWISE) ARISING IN ANY WAY OUT OF THE USE OF THIS SOFTWARE, EVEN IF ADVISED OF THE POSSIBILITY OF SUCH DAMAGE. */ # (C) Copyright 2002-2006 # Wolfgang Denk, DENX Software Engineering, wd@denx.de. # # See file CREDITS for list of people who contributed to this

	# project. # # This program is free software; you can redistribute it and/or # modify it under the terms of the GNU General Public License as # published by the Free Software Foundation; either version 2 of # the License, or (at your option) any later version. # # This program is distributed in the hope that it will be useful, # but WITHOUT ANY WARRANTY; without even the implied warranty of # MERCHANTABILITY or FITNESS FOR A PARTICULAR PURPOSE. See the # GNU General Public License for more details. # # You should have received a copy of the GNU General Public License # along with this program; if not, write to the Free Software # Foundation, Inc., 59 Temple Place, Suite 330, Boston, # MA 02111-1307 USA #
Button-hotplug	Copyright (C) 2008 Gabor Juhos <juhosg@openwrt.org> Based on the diag.c - GPIO interface driver for Broadcom boards Copyright (C) 2006 Mike Baker <mbm@openwrt.org>, Copyright (C) 2006-2007 Felix Fietkau <nbd@openwrt.org> Copyright (C) 2008 Andy Boyett <agb@openwrt.org> GPL v2 See full license text on page 4-25. # (C) Copyright 2002-2006 # Wolfgang Denk, DENX Software Engineering, wd@denx.de. # # See file CREDITS for list of people who contributed to this # project. # # This program is free software; you can redistribute it and/or # modify it under the terms of the GNU General Public License as # published by the Free Software Foundation; either version 2 of # the License, or (at your option) any later version. # # This program is distributed in the hope that it will be useful, # but WITHOUT ANY WARRANTY; without even the implied warranty of # MERCHANTABILITY or FITNESS FOR A PARTICULAR PURPOSE. See the # GNU General Public License for more details. # # You should have received a copy of the GNU General Public License # along with this program; if not, write to the Free Software # Foundation, Inc., 59 Temple Place, Suite 330, Boston, # MA 02111-1307 USA

	#
libdbi	GNU LESSER GENERAL PUBLIC LICENSE Version 2.1, February 1999 Copyright (C) 1991, 1999 Free Software Foundation, Inc. 59 Temple Place, Suite 330, Boston, MA 02111-1307 USA Everyone is permitted to copy and distribute verbatim copies of this license document, but changing it is not allowed. [This is the first released version of the Lesser GPL. It also counts as the successor of the GNU Library Public License, version 2, hence the version number 2.1.] See full license text on page 4-47. # (C) Copyright 2002-2006 # Wolfgang Denk, DENX Software Engineering, wd@denx.de. # # See file CREDITS for list of people who contributed to this # project. # # This program is free software; you can redistribute it and/or # modify it under the terms of the GNU General Public License as # published by the Free Software Foundation; either version 2 of # the License, or (at your option) any later version. # # This program is distributed in the hope that it will be useful, # but WITHOUT ANY WARRANTY; without even the implied warranty of # MERCHANTABILITY or FITNESS FOR A PARTICULAR PURPOSE. See the # GNU General Public License for more details. # # You should have received a copy of the GNU General Public License # along with this program; if not, write to the Free Software # Foundation, Inc., 59 Temple Place, Suite 330, Boston, # MA 02111-1307 USA #
libiconv	# Copyright (C) 1996, 1997, 1998, 1999, 2000, 2001, 2002, 2003, 2004, # 2005 Free Software Foundation, Inc. /* Copyright (C) 1992,1995-1999,2000-2002,2005-2006 Free Software Foundation, Inc. This file is part of the GNU C Library. /* Copyright (C) 1999-2001, 2003 Bruno Haible. This file is not part of the GNU LIBICONV Library. This file is put into the public domain. */

```
/*
 * Copyright (C) 1999-2001, 2005 Free Software Foundation, Inc.
 * This file is part of the GNU LIBICONV Library.
 *
 * The GNU LIBICONV Library is free software; you can redistribute it
 * and/or modify it under the terms of the GNU Library General Public
 * License as published by the Free Software Foundation; either version 2
 * of the License, or (at your option) any later version.
 *
 * The GNU LIBICONV Library is distributed in the hope that it will be
 * useful, but WITHOUT ANY WARRANTY; without even the implied warranty of
 * MERCHANTABILITY or FITNESS FOR A PARTICULAR PURPOSE.  See the GNU
 * Library General Public License for more details.
 */
/* Copyright (C) 1999-2004, 2006 Free Software Foundation, Inc.
   This file is part of the GNU LIBICONV Tools.

   This program is free software; you can redistribute it and/or modify
   it under the terms of the GNU General Public License as published by
   the Free Software Foundation; either version 2, or (at your option)
   any later version.

   This program is distributed in the hope that it will be useful,
   but WITHOUT ANY WARRANTY; without even the implied warranty of
   MERCHANTABILITY or FITNESS FOR A PARTICULAR PURPOSE.  See the
   GNU General Public License for more details.
 */
/*   Copyright (C) 2000-2003 Free Software Foundation, Inc.
   This file is part of the GNU CHARSET Library.

   This program is free software; you can redistribute it and/or modify it
   under the terms of the GNU Library General Public License as published
   by the Free Software Foundation; either version 2, or (at your option)
   any later version.
*/
# This originates from X11R5 (mit/util/scripts/install.sh), which was
# later released in X11R6 (xc/config/util/install.sh) with the
# following copyright and license.
#
# Copyright (C) 1994 X Consortium
#
# Permission is hereby granted, free of charge, to any person obtaining a copy
# of this software and associated documentation files (the "Software"), to
# deal in the Software without restriction, including without limitation the
# rights to use, copy, modify, merge, publish, distribute, sublicense, and/or
# sell copies of the Software, and to permit persons to whom the Software is
# furnished to do so, subject to the following conditions:
#
# The above copyright notice and this permission notice shall be included in
```

all copies or substantial portions of the Software.
#
THE SOFTWARE IS PROVIDED "AS IS", WITHOUT WARRANTY OF ANY KIND, EXPRESS OR

IMPLIED, INCLUDING BUT NOT LIMITED TO THE WARRANTIES OF MERCHANTABILITY,
FITNESS FOR A PARTICULAR PURPOSE AND NONINFRINGEMENT. IN NO EVENT SHALL THE
X CONSORTIUM BE LIABLE FOR ANY CLAIM, DAMAGES OR OTHER LIABILITY, WHETHER IN
AN ACTION OF CONTRACT, TORT OR OTHERWISE, ARISING FROM, OUT OF OR IN CONNEC-
TION WITH THE SOFTWARE OR THE USE OR OTHER DEALINGS IN THE SOFTWARE.
#
Except as contained in this notice, the name of the X Consortium shall not
be used in advertising or otherwise to promote the sale, use or other deal-
ings in this Software without prior written authorization from the X Consor-
tium.
#
#
FSF changes to this file are in the public domain.
#
Calling this script install-sh is preferred over install.sh, to prevent
`make' implicit rules from creating a file called install from it
when there is no Makefile.
#
This script is compatible with the BSD install script, but was written
from scratch. It can only install one file at a time, a restriction
shared with many OS's install programs.

See full license text on page 4-25.

(C) Copyright 2002-2006
Wolfgang Denk, DENX Software Engineering, wd@denx.de.
#
See file CREDITS for list of people who contributed to this
project.
#
This program is free software; you can redistribute it and/or
modify it under the terms of the GNU General Public License as
published by the Free Software Foundation; either version 2 of
the License, or (at your option) any later version.
#
This program is distributed in the hope that it will be useful,
but WITHOUT ANY WARRANTY; without even the implied warranty of
MERCHANTABILITY or FITNESS FOR A PARTICULAR PURPOSE. See the
GNU General Public License for more details.

	# # You should have received a copy of the GNU General Public License # along with this program; if not, write to the Free Software # Foundation, Inc., 59 Temple Place, Suite 330, Boston, # MA 02111-1307 USA #
libiwinfo	Copyright (C) 2010-2012 Jo-Philipp Wich <xm@subsignal.org> Copyright (C) 2003-2004 Greg Kroah-Hartman <greg@kroah.com> Copyright (C) 2004-2006 Kay Sievers <kay.sievers@vrfy.org> Copyright (C) 2004 Harald Hoyer <harald@redhat.com> Copyright (C) 2004 Harald Hoyer <harald@redhat.com> Copyright (c) 2001 Atsushi Onoe Copyright (c) 2002-2005 Sam Leffler, Errno Consulting Copyright (c) 1997-2007 Jean Tourrilhes, All Rights Reserved. Copyright 2008 Michael Buesch <mb@bu3sch.de> Copyright 2008, 2009 Luis R. Rodriguez <lrodriguez@atheros.com> Copyright 2008 Jouni Malinen <jouni.malinen@atheros.com> Copyright 2008 Colin McCabe <colin@cozybit.com> Copyright 2006, Broadcom Corporation Copyright 2006-2010 Johannes Berg <johannes@sipsolutions.net> /* * iwinfo - Wireless Information Library - Command line frontend * * Copyright (C) 2011 Jo-Philipp Wich <xm@subsignal.org> * * The iwinfo library is free software: you can redistribute it and/or * modify it under the terms of the GNU General Public License version 2 * as published by the Free Software Foundation. * * The iwinfo library is distributed in the hope that it will be useful, * but WITHOUT ANY WARRANTY; without even the implied warranty of * MERCHANTABILITY or FITNESS FOR A PARTICULAR PURPOSE. * See the GNU General Public License for more details. * * You should have received a copy of the GNU General Public License along * with the iwinfo library. If not, see http://www.gnu.org/licenses/. */ See full license text on page 4-25. # (C) Copyright 2002-2006 # Wolfgang Denk, DENX Software Engineering, wd@denx.de. # # See file CREDITS for list of people who contributed to this # project. # # This program is free software; you can redistribute it and/or # modify it under the terms of the GNU General Public License as

	# published by the Free Software Foundation; either version 2 of # the License, or (at your option) any later version. # # This program is distributed in the hope that it will be useful, # but WITHOUT ANY WARRANTY; without even the implied warranty of # MERCHANTABILITY or FITNESS FOR A PARTICULAR PURPOSE. See the # GNU General Public License for more details. # # You should have received a copy of the GNU General Public License # along with this program; if not, write to the Free Software # Foundation, Inc., 59 Temple Place, Suite 330, Boston, # MA 02111-1307 USA #
Libnl-tiny	LGPLv2.1 /* * lib/attr.c Netlink Attributes * * This library is free software; you can redistribute it and/or * modify it under the terms of the GNU Lesser General Public * License as published by the Free Software Foundation version 2.1 * of the License. * * Copyright (c) 2003-2008 Thomas Graf <tgraf@suug.ch> */ GNU LESSER GENERAL PUBLIC LICENSE Version 2.1, February 1999 Copyright (C) 1991, 1999 Free Software Foundation, Inc. 51 Franklin Street, Fifth Floor, Boston, MA 02110-1301 USA Everyone is permitted to copy and distribute verbatim copies of this license document, but changing it is not allowed. [This is the first released version of the Lesser GPL. It also counts as the successor of the GNU Library Public License, version 2, hence the version number 2.1.] Preamble The licenses for most software are designed to take away your freedom to share and change it. By contrast, the GNU General Public Licenses are intended to guarantee your freedom to share and change free software--to make sure the software is free for all its users.

This license, the Lesser General Public License, applies to some specially designated software packages--typically libraries--of the Free Software Foundation and other authors who decide to use it. You can use it too, but we suggest you first think carefully about whether this license or the ordinary General Public License is the better strategy to use in any particular case, based on the explanations below.

When we speak of free software, we are referring to freedom of use, not price. Our General Public Licenses are designed to make sure that you have the freedom to distribute copies of free software (and charge for this service if you wish); that you receive source code or can get it if you want it; that you can change the software and use pieces of it in new free programs; and that you are informed that you can do these things.

To protect your rights, we need to make restrictions that forbid distributors to deny you these rights or to ask you to surrender these rights. These restrictions translate to certain responsibilities for you if you distribute copies of the library or if you modify it.

For example, if you distribute copies of the library, whether gratis or for a fee, you must give the recipients all the rights that we gave you. You must make sure that they, too, receive or can get the source code. If you link other code with the library, you must provide complete object files to the recipients, so that they can relink them with the library after making changes to the library and recompiling it. And you must show them these terms so they know their rights.

We protect your rights with a two-step method: (1) we copyright the library, and (2) we offer you this license, which gives you legal permission to copy, distribute and/or modify the library.

To protect each distributor, we want to make it very clear that there is no warranty for the free library. Also, if the library is modified by someone else and passed on, the recipients should know that what they have is not the original version, so that the original author's reputation will not be affected by problems that might be introduced by others.

Finally, software patents pose a constant threat to the existence of any free program. We wish to make sure that a company cannot effectively restrict the users of a free program by obtaining a restrictive license from a patent holder. Therefore, we insist that any patent license obtained for a version of the library must be consistent with the full freedom of use specified in this license.

Most GNU software, including some libraries, is covered by the ordinary GNU General Public License. This license, the GNU Lesser General Public License, applies to certain designated libraries, and is quite different from the ordinary General Public License. We use this license for certain libraries in order to permit linking those libraries into non-free programs. When a program is linked with a library, whether statically or using a shared library, the combination of the two is legally speaking a combined work, a derivative of the original library. The ordinary General Public License therefore permits such linking only if the entire combination fits its criteria of freedom. The Lesser General Public License permits more lax criteria for linking other code with the library.

We call this license the "Lesser" General Public License because it does Less to protect the user's freedom than the ordinary General Public License. It also provides other free software developers Less of an advantage over competing non-free programs. These disadvantages are the reason we use the ordinary General Public License for many libraries. However, the Lesser license provides advantages in certain special circumstances.

For example, on rare occasions, there may be a special need to encourage the widest possible use of a certain library, so that it becomes a de-facto standard. To achieve this, non-free programs must be allowed to use the library. A more frequent case is that a free library does the same job as widely used non-free libraries. In this case, there is little to gain by limiting the free library to free software only, so we use the Lesser General Public License.

In other cases, permission to use a particular library in non-free programs enables a greater number of people to use a large body of free software. For example, permission to use the GNU C Library in non-free programs enables many more people to use the whole GNU operating system, as well as its variant, the GNU/Linux operating system.

Although the Lesser General Public License is Less protective of the users' freedom, it does ensure that the user of a program that is linked with the Library has the freedom and the wherewithal to run that program using a modified version of the Library.

The precise terms and conditions for copying, distribution and modification follow. Pay close attention to the difference between a "work based on the library" and a "work that uses the library". The former contains code derived from the library, whereas the latter must be combined with the library in order to run.

TERMS AND CONDITIONS FOR COPYING, DISTRIBUTION AND MODIFICATION

0. This License Agreement applies to any software library or other program which contains a notice placed by the copyright holder or other authorized party saying it may be distributed under the terms of this Lesser General Public License (also called "this License"). Each licensee is addressed as "you".

A "library" means a collection of software functions and/or data prepared so as to be conveniently linked with application programs (which use some of those functions and data) to form executables.

The "Library", below, refers to any such software library or work which has been distributed under these terms. A "work based on the Library" means either the Library or any derivative work under copyright law: that is to say, a work containing the Library or a portion of it, either verbatim or with modifications and/or translated straightforwardly into another language. (Hereinafter, translation is included without limitation in the term "modification".)

"Source code" for a work means the preferred form of the work for making modifications to it. For a library, complete source code means all the source code for all modules it contains, plus any associated interface definition files, plus the scripts used to control compilation and installation of the library.

Activities other than copying, distribution and modification are not covered by this License; they are outside its scope. The act of running a program using the Library is not restricted, and output from such a program is covered only if its contents constitute a work based on the Library (independent of the use of the Library in a tool for writing it). Whether that is true depends on what the Library does and what the program that uses the Library does.

1. You may copy and distribute verbatim copies of the Library's complete source code as you receive it, in any medium, provided that you conspicuously and appropriately publish on each copy an appropriate copyright notice and disclaimer of warranty; keep intact all the notices that refer to this License and to the absence of any warranty; and distribute a copy of this License along with the Library.

You may charge a fee for the physical act of transferring a copy, and you may at your option offer warranty protection in exchange for a fee.

2. You may modify your copy or copies of the Library or any portion of it, thus forming a work based on the Library, and copy and distribute such modifications or work under the terms of Section 1 above, provided that you also meet all of these conditions:

a) The modified work must itself be a software library.

b) You must cause the files modified to carry prominent notices stating that you changed the files and the date of any change.

c) You must cause the whole of the work to be licensed at no charge to all third parties under the terms of this License.

d) If a facility in the modified Library refers to a function or a table of data to be supplied by an application program that uses the facility, other than as an argument passed when the facility is invoked, then you must make a good faith effort to ensure that, in the event an application does not supply such function or table, the facility still operates, and performs whatever part of its purpose remains meaningful.

(For example, a function in a library to compute square roots has a purpose that is entirely well-defined independent of the application. Therefore, Subsection 2d requires that any application-supplied function or table used by this function must be optional: if the application does not supply it, the square root function must still compute square roots.)

These requirements apply to the modified work as a whole. If identifiable sections of that work are not derived from the Library, and can be reasonably considered independent and separate works in themselves, then this License, and its terms, do not apply to those sections when you distribute them as separate works. But when you distribute the same sections as part of a whole which is a work based on the Library, the distribution of the whole must be on the terms of this License, whose permissions for other licensees extend to the entire whole, and thus to each and every part regardless of who wrote it.

Thus, it is not the intent of this section to claim rights or contest your rights to work written entirely by you; rather, the intent is to exercise the right to control the

distribution of derivative or collective works based on the Library.

In addition, mere aggregation of another work not based on the Library with the Library (or with a work based on the Library) on a volume of a storage or distribution medium does not bring the other work under the scope of this License.

3. You may opt to apply the terms of the ordinary GNU General Public License instead of this License to a given copy of the Library. To do this, you must alter all the notices that refer to this License, so that they refer to the ordinary GNU General Public License, version 2, instead of to this License. (If a newer version than version 2 of the ordinary GNU General Public License has appeared, then you can specify that version instead if you wish.) Do not make any other change in these notices.

Once this change is made in a given copy, it is irreversible for that copy, so the ordinary GNU General Public License applies to all subsequent copies and derivative works made from that copy.

This option is useful when you wish to copy part of the code of the Library into a program that is not a library.

4. You may copy and distribute the Library (or a portion or derivative of it, under Section 2) in object code or executable form under the terms of Sections 1 and 2 above provided that you accompany it with the complete corresponding machine-readable source code, which must be distributed under the terms of Sections 1 and 2 above on a medium customarily used for software interchange.

If distribution of object code is made by offering access to copy from a designated place, then offering equivalent access to copy the source code from the same place satisfies the requirement to distribute the source code, even though third parties are not compelled to copy the source along with the object code.

5. A program that contains no derivative of any portion of the Library, but is designed to work with the Library by being compiled or linked with it, is called a "work that uses the Library". Such a work, in isolation, is not a derivative work of the Library, and therefore falls outside the scope of this License.

However, linking a "work that uses the Library" with the Library creates an executable that is a derivative of the Library (because it contains portions of the Library), rather than a "work that uses the library". The executable is therefore covered by this License. Section 6 states terms for distribution of such executables.

When a "work that uses the Library" uses material from a header file that is part of the Library, the object code for the work may be a derivative work of the Library even though the source code is not. Whether this is true is especially significant if the work can be linked without the Library, or if the work is itself a library. The threshold for this to be true is not precisely defined by law.

If such an object file uses only numerical parameters, data structure layouts and accessors, and small macros and small inline functions (ten lines or less in length), then the use of the object file is unrestricted, regardless of whether it is legally a derivative work. (Executables containing this object code plus portions of the Library will still fall under Section 6.)

Otherwise, if the work is a derivative of the Library, you may distribute the object code for the work under the terms of Section 6. Any executables containing that work also fall under Section 6, whether or not they are linked directly with the Library itself.

6. As an exception to the Sections above, you may also combine or link a "work that uses the Library" with the Library to produce a work containing portions of the Library, and distribute that work under terms of your choice, provided that the terms permit modification of the work for the customer's own use and reverse engineering for debugging such modifications.

You must give prominent notice with each copy of the work that the Library is used in it and that the Library and its use are covered by this License. You must supply a copy of this License. If the work during execution displays copyright notices, you must include the copyright notice for the Library among them, as well as a reference directing the user to the copy of this License. Also, you must do one of these things:

a) Accompany the work with the complete corresponding machine-readable source code for the Library including whatever changes were used in the work (which must be distributed under Sections 1 and 2 above); and, if the work is an executable linked with the Library, with the complete machine-readable "work that uses the Library", as object code and/or source code, so that the user can modify the Library and then relink to produce a modified executable containing the modified Library. (It is understood that the user who changes the contents of definitions files in the Library will not necessarily be able to recompile the application to use the modified definitions.)

b) Use a suitable shared library mechanism for linking with the Library. A suitable mechanism is one that (1) uses at run time a copy of the library already present on the user's computer system, rather than copying library functions into the executable, and (2) will operate properly with a modified version of the library, if the user installs one, as long as the modified version is interface-compatible with the version that the work was made with.

c) Accompany the work with a written offer, valid for at least three years, to give the same user the materials specified in Subsection 6a, above, for a charge no more than the cost of performing this distribution.

d) If distribution of the work is made by offering access to copy from a designated place, offer equivalent access to copy the above specified materials from the same place.

e) Verify that the user has already received a copy of these materials or that you have already sent this user a copy.

For an executable, the required form of the "work that uses the Library" must include any data and utility programs needed for reproducing the executable from it. However, as a special exception, the materials to be distributed need not include anything that is normally distributed (in either source or binary form) with the major components (compiler, kernel, and so on) of the operating system on which the executable runs, unless that component itself accompanies the executable.

It may happen that this requirement contradicts the license restrictions of other proprietary libraries that do not normally accompany the operating system. Such a contradiction means you cannot use both them and the Library together in an executable that you distribute.

7. You may place library facilities that are a work based on the Library side-by-side in a single library together with other library facilities not covered by this License, and distribute such a combined library, provided that the separate distribution of the work based on the Library and of the other library facilities is otherwise permitted, and provided that you do these two things:

a) Accompany the combined library with a copy of the same work based on the Library, uncombined with any other library facilities. This must be distributed under the terms of the Sections above.

b) Give prominent notice with the combined library of the fact that part of it is a work based on the Library, and explaining where to find the accompanying uncombined form of the same work.

8. You may not copy, modify, sublicense, link with, or distribute the Library except as expressly provided under this License. Any attempt otherwise to copy, modify, sublicense, link with, or distribute the Library is void, and will automatically terminate your rights under this License. However, parties who have received copies, or rights, from you under this License will not have their licenses terminated so long as such parties remain in full compliance.

9. You are not required to accept this License, since you have not signed it. However, nothing else grants you permission to modify or distribute the Library or its derivative works. These actions are prohibited by law if you do not accept this License. Therefore, by modifying or distributing the Library (or any work based on the Library), you indicate your acceptance of this License to do so, and all its terms and conditions for copying, distributing or modifying the Library or works based on it.

10. Each time you redistribute the Library (or any work based on the Library), the recipient automatically receives a license from the original licensor to copy, distribute, link with or modify the Library subject to these terms and conditions. You may not impose any further restrictions on the recipients' exercise of the rights granted herein. You are not responsible for enforcing compliance by third parties with this License.

11. If, as a consequence of a court judgment or allegation of patent infringement or for any other reason (not limited to patent issues), conditions are imposed on you (whether by court order, agreement or otherwise) that contradict the conditions of this License, they do not excuse you from the conditions of this License. If you cannot distribute so as to satisfy simultaneously your obligations under this License and any other pertinent obligations, then as a consequence you may not distribute the Library at all. For example, if a patent license would not permit royalty-free redistribution of the Library by all those who receive copies directly or indirectly through you, then the only way you could satisfy both it and this License would be to refrain entirely from distribution of the Library.

If any portion of this section is held invalid or unenforceable under any particular circumstance, the balance of the section is intended to apply, and the section as a whole is intended to apply in other circumstances.

It is not the purpose of this section to induce you to infringe any patents or other property right claims or to contest validity of any such claims; this section has the sole purpose of protecting the integrity of the free software distribution system which is implemented by public license practices. Many people have made generous contributions to the wide range of software distributed through that system in reliance on consistent application of that system; it is up to the author/donor to decide if he or she is willing to distribute software through any other system and a licensee cannot impose that choice.

This section is intended to make thoroughly clear what is believed to be a consequence of the rest of this License.

12. If the distribution and/or use of the Library is restricted in certain countries either by patents or by copyrighted interfaces, the original copyright holder who places the Library under this License may add an explicit geographical distribution limitation excluding those countries, so that distribution is permitted only in or among countries not thus excluded. In such case, this License incorporates the limitation as if written in the body of this License.

13. The Free Software Foundation may publish revised and/or new versions of the Lesser General Public License from time to time. Such new versions will be similar in spirit to the present version, but may differ in detail to address new problems or concerns.

Each version is given a distinguishing version number. If the Library specifies a version number of this License which applies to it and "any later version", you have the option of following the terms and conditions either of that version or of any later version published by the Free Software Foundation. If the Library does not specify a license version number, you may choose any version ever published by the Free Software Foundation.

14. If you wish to incorporate parts of the Library into other free programs whose distribution conditions are incompatible with these, write to the author to ask for permission. For software which is copyrighted by the Free Software Foundation, write to the Free Software Foundation; we sometimes make exceptions for this. Our decision will be guided by the two goals of preserving the free status of all derivatives of our free software and of promoting the sharing and reuse of software generally.

NO WARRANTY

15. BECAUSE THE LIBRARY IS LICENSED FREE OF CHARGE, THERE IS NO WARRANTY FOR THE LIBRARY, TO THE EXTENT PERMITTED BY APPLICABLE LAW. EXCEPT WHEN OTHERWISE STATED IN WRITING THE COPYRIGHT HOLDERS AND/OR OTHER PARTIES PROVIDE THE LIBRARY "AS IS" WITHOUT WARRANTY OF ANY KIND, EITHER EXPRESSED OR IMPLIED, INCLUDING, BUT NOT LIMITED TO, THE IMPLIED WARRANTIES OF MERCHANTABILITY AND FITNESS FOR A PARTICULAR PURPOSE. THE ENTIRE RISK AS TO THE QUALITY

AND PERFORMANCE OF THE LIBRARY IS WITH YOU. SHOULD THE LIBRARY PROVE DEFECTIVE, YOU ASSUME THE COST OF ALL NECESSARY SERVICING, REPAIR OR CORRECTION.

16. IN NO EVENT UNLESS REQUIRED BY APPLICABLE LAW OR AGREED TO IN WRITING WILL ANY COPYRIGHT HOLDER, OR ANY OTHER PARTY WHO MAY MODIFY AND/OR REDISTRIBUTE THE LIBRARY AS PERMITTED ABOVE, BE LIABLE TO YOU FOR DAMAGES, INCLUDING ANY GENERAL, SPECIAL, INCIDENTAL OR CONSEQUENTIAL DAMAGES ARISING OUT OF THE USE OR INABILITY TO USE THE LIBRARY (INCLUDING BUT NOT LIMITED TO LOSS OF DATA OR DATA BEING RENDERED INACCURATE OR LOSSES SUSTAINED BY YOU OR THIRD PARTIES OR A FAILURE OF THE LIBRARY TO OPERATE WITH ANY OTHER SOFTWARE), EVEN IF SUCH HOLDER OR OTHER PARTY HAS BEEN ADVISED OF THE POSSIBILITY OF SUCH DAMAGES.

END OF TERMS AND CONDITIONS

How to Apply These Terms to Your New Libraries

If you develop a new library, and you want it to be of the greatest possible use to the public, we recommend making it free software that everyone can redistribute and change. You can do so by permitting redistribution under these terms (or, alternatively, under the terms of the ordinary General Public License).

To apply these terms, attach the following notices to the library. It is safest to attach them to the start of each source file to most effectively convey the exclusion of warranty; and each file should have at least the "copyright" line and a pointer to where the full notice is found.

one line to give the library's name and an idea of what it does.

Copyright (C) *year name of author*

This library is free software; you can redistribute it and/or

modify it under the terms of the GNU Lesser General Public

License as published by the Free Software Foundation; either

version 2.1 of the License, or (at your option) any later version.

This library is distributed in the hope that it will be useful,

but WITHOUT ANY WARRANTY; without even the implied warranty of

MERCHANTABILITY or FITNESS FOR A PARTICULAR PURPOSE. See the GNU

Lesser General Public License for more details.

You should have received a copy of the GNU Lesser General Public

License along with this library; if not, write to the Free Software

Foundation, Inc., 51 Franklin Street, Fifth Floor, Boston, MA 02110-1301 USA

Also add information on how to contact you by electronic and paper mail.

You should also get your employer (if you work as a programmer) or your school, if any, to sign a "copyright disclaimer" for the library, if necessary. Here is a sample; alter the names:

Yoyodyne, Inc., hereby disclaims all copyright interest in

the library `Frob' (a library for tweaking knobs) written

by James Random Hacker.

signature of Ty Coon, 1 April 1990

Ty Coon, President of Vice

That's all there is to it!

(C) Copyright 2002-2006
Wolfgang Denk, DENX Software Engineering, wd@denx.de.
#
See file CREDITS for list of people who contributed to this
project.
#
This program is free software; you can redistribute it and/or
modify it under the terms of the GNU General Public License as
published by the Free Software Foundation; either version 2 of
the License, or (at your option) any later version.
#
This program is distributed in the hope that it will be useful,
but WITHOUT ANY WARRANTY; without even the implied warranty of
MERCHANTABILITY or FITNESS FOR A PARTICULAR PURPOSE. See the
GNU General Public License for more details.
#
You should have received a copy of the GNU General Public License
along with this program; if not, write to the Free Software
Foundation, Inc., 59 Temple Place, Suite 330, Boston,
MA 02111-1307 USA
#

libpcap

Copyright (c) 1999 - 2005 NetGroup, Politecnico di Torino (Italy)
Copyright (c) 2005 - 2008 CACE Technologies, Davis (California)
Copyright (c) 1997 Yen Yen Lim and North Dakota State University
Copyright (c) 1995-1999 Kungliga Tekniska Högskolan
Copyright (c) 1982, 1986, 1988 - 1998, 2000 The Regents of the University of California
Copyright (c) 2000 Torsten Landschoff <torsten@debian.org>, Sebastian Krahmer <krahmer@cs.uni-potsdam.de>
Copyright (c) 2006 Paolo Abeni (Italy)
Copyright (c) 2007 Fulko Hew, SITA INC Canada, Inc <fulko.hew@sita.aero>
Copyright (c) 2001 Atsushi Onoe
Copyright (c) 2002-2005 Sam Leffler, Errno Consulting
Copyright 1989 by Carnegie Mellon
Copyright (c) 1996 Juniper Networks, Inc.
Copyright (c) 1993,1994 Texas A&M University.
Copyright (C) 1995, 1996, 1997, and 1998 WIDE Project.
Portions Copyright (c) 1993 by Digital Equipment Corporation.
Copyright (C) 1999 WIDE Project.
Copyright (c) 2005 - 2006 CACE Technologies, Davis (California)

(Ref: libpcap-1.0.0/LICENSE)

License: BSD

Redistribution and use in source and binary forms, with or without modification, are permitted provided that the following conditions are met:

1. Redistributions of source code must retain the above copyright notice, this list of conditions and the following disclaimer.
2. Redistributions in binary form must reproduce the above copyright notice, this list of conditions and the following disclaimer in the documentation and/or other materials provided with the distribution.
3. The names of the authors may not be used to endorse or promote products derived from this software without specific prior written permission.

THIS SOFTWARE IS PROVIDED ``AS IS'' AND WITHOUT ANY EXPRESS OR IMPLIED WARRANTIES, INCLUDING, WITHOUT LIMITATION, THE IMPLIED WARRANTIES OF MERCHANTABILITY AND FITNESS FOR A PARTICULAR PURPOSE.

(C) Copyright 2002-2006
Wolfgang Denk, DENX Software Engineering, wd@denx.de.
#
See file CREDITS for list of people who contributed to this
project.
#

	# This program is free software; you can redistribute it and/or # modify it under the terms of the GNU General Public License as # published by the Free Software Foundation; either version 2 of # the License, or (at your option) any later version. # # This program is distributed in the hope that it will be useful, # but WITHOUT ANY WARRANTY; without even the implied warranty of # MERCHANTABILITY or FITNESS FOR A PARTICULAR PURPOSE. See the # GNU General Public License for more details. # # You should have received a copy of the GNU General Public License # along with this program; if not, write to the Free Software # Foundation, Inc., 59 Temple Place, Suite 330, Boston, # MA 02111-1307 USA #
libtool	GNU GENERAL PUBLIC LICENSE Version 2, June 1991 Copyright (C) 1989, 1991 Free Software Foundation, Inc., 51 Franklin Street, Fifth Floor, Boston, MA 02110-1301 USA Everyone is permitted to copy and distribute verbatim copies of this license document, but changing it is not allowed. See full license text on page 4-25. # (C) Copyright 2002-2006 # Wolfgang Denk, DENX Software Engineering, wd@denx.de. # # See file CREDITS for list of people who contributed to this # project. # # This program is free software; you can redistribute it and/or # modify it under the terms of the GNU General Public License as # published by the Free Software Foundation; either version 2 of # the License, or (at your option) any later version. # # This program is distributed in the hope that it will be useful, # but WITHOUT ANY WARRANTY; without even the implied warranty of # MERCHANTABILITY or FITNESS FOR A PARTICULAR PURPOSE. See the # GNU General Public License for more details. # # You should have received a copy of the GNU General Public License # along with this program; if not, write to the Free Software # Foundation, Inc., 59 Temple Place, Suite 330, Boston, # MA 02111-1307 USA #

libjson-c

Copyright (c) 2009-2012 Eric Haszlakiewicz

Permission is hereby granted, free of charge, to any person obtaining a copy of this software and associated documentation files (the "Software"), to deal in the Software without restriction, including without limitation the rights to use, copy, modify, merge, publish, distribute, sublicense, and/or sell copies of the Software, and to permit persons to whom the Software is furnished to do so, subject to the following conditions:

The above copyright notice and this permission notice shall be included in all copies or substantial portions of the Software.

THE SOFTWARE IS PROVIDED "AS IS", WITHOUT WARRANTY OF ANY KIND, EXPRESS OR IMPLIED, INCLUDING BUT NOT LIMITED TO THE WARRANTIES OF MERCHANTABILITY, FITNESS FOR A PARTICULAR PURPOSE AND NONINFRINGEMENT. IN NO EVENT SHALL THE AUTHORS OR COPYRIGHT HOLDERS BE LIABLE FOR ANY CLAIM, DAMAGES OR OTHER LIABILITY, WHETHER IN AN ACTION OF CONTRACT, TORT OR OTHERWISE, ARISING FROM, OUT OF OR IN CONNECTION WITH THE SOFTWARE OR THE USE OR OTHER DEALINGS IN THESOFTWARE.

Copyright (c) 2004, 2005 Metaparadigm Pte Ltd

Permission is hereby granted, free of charge, to any person obtaining a copy of this software and associated documentation files (the "Software"), to deal in the Software without restriction, including without limitation the rights to use, copy, modify, merge, publish, distribute, sublicense, and/or sell copies of the Software, and to permit persons to whom the Software is furnished to do so, subject to the following conditions:

The above copyright notice and this permission notice shall be included in all copies or substantial portions of the Software.

THE SOFTWARE IS PROVIDED "AS IS", WITHOUT WARRANTY OF ANY KIND, EXPRESS OR IMPLIED, INCLUDING BUT NOT LIMITED TO THE WARRANTIES OF MERCHANTABILITY, FITNESS FOR A PARTICULAR PURPOSE AND NONINFRINGEMENT. IN NO EVENT SHALL THE AUTHORS OR COPYRIGHT HOLDERS BE LIABLE FOR ANY CLAIM, DAMAGES OR OTHER LIABILITY, WHETHER IN AN ACTION OF CONTRACT, TORT OR OTHERWISE, ARISING FROM, OUT OF OR IN CONNECTION WITH THE SOFTWARE OR THE USE OR OTHER DEALINGS IN THESOFTWARE.

(C) Copyright 2002-2006
Wolfgang Denk, DENX Software Engineering, wd@denx.de.
#
See file CREDITS for list of people who contributed to this
project.
#
This program is free software; you can redistribute it and/or

	# modify it under the terms of the GNU General Public License as # published by the Free Software Foundation; either version 2 of # the License, or (at your option) any later version. # # This program is distributed in the hope that it will be useful, # but WITHOUT ANY WARRANTY; without even the implied warranty of # MERCHANTABILITY or FITNESS FOR A PARTICULAR PURPOSE. See the # GNU General Public License for more details. # # You should have received a copy of the GNU General Public License # along with this program; if not, write to the Free Software # Foundation, Inc., 59 Temple Place, Suite 330, Boston, # MA 02111-1307 USA #
LibWebSockets	Libwebsockets and included programs are provided under the terms of the GNU Library General Public License (LGPL) 2.1, with the following exceptions: 1) Static linking of programs with the libwebsockets library does not constitute a derivative work and does not require the author to provide source code for the program, use the shared libwebsockets libraries, or link their program against a user-supplied version of libwebsockets. If you link the program to a modified version of libwebsockets, then the changes to libwebsockets must be provided under the terms of the LGPL in sections 1, 2, and 4. 2) You do not have to provide a copy of the libwebsockets license with programs that are linked to the libwebsockets library, nor do you have to identify the libwebsockets license in your program or documentation as required by section 6 of the LGPL. However, programs must still identify their use of libwebsockets. The following example statement can be included in user documentation to satisfy this requirement: "[program] is based in part on the work of the libwebsockets project (http://libwebsockets.org)" GNU LESSER GENERAL PUBLIC LICENSE Version 2.1, February 1999 Copyright (C) 1991, 1999 Free Software Foundation, Inc. 51 Franklin Street, Fifth Floor, Boston, MA 02110-1301 USA Everyone is permitted to copy and distribute verbatim copies of this license document, but changing it is not allowed.

	[This is the first released version of the Lesser GPL. It also counts as the successor of the GNU Library Public License, version 2, hence the version number 2.1.] See full license text on page 4-47. # (C) Copyright 2002-2006 # Wolfgang Denk, DENX Software Engineering, wd@denx.de. # # See file CREDITS for list of people who contributed to this # project. # # This program is free software; you can redistribute it and/or # modify it under the terms of the GNU General Public License as # published by the Free Software Foundation; either version 2 of # the License, or (at your option) any later version. # # This program is distributed in the hope that it will be useful, # but WITHOUT ANY WARRANTY; without even the implied warranty of # MERCHANTABILITY or FITNESS FOR A PARTICULAR PURPOSE. See the # GNU General Public License for more details. # # You should have received a copy of the GNU General Public License # along with this program; if not, write to the Free Software # Foundation, Inc., 59 Temple Place, Suite 330, Boston, # MA 02111-1307 USA #
Libjansson	Copyright (c) 2009-2013 Petri Lehtinen <petri@digip.org> Permission is hereby granted, free of charge, to any person obtaining a copy of this software and associated documentation files (the "Software"), to deal in the Software without restriction, including without limitation the rights to use, copy, modify, merge, publish, distribute, sublicense, and/or sell copies of the Software, and to permit persons to whom the Software is furnished to do so, subject to the following conditions: The above copyright notice and this permission notice shall be included in all copies or substantial portions of the Software. THE SOFTWARE IS PROVIDED "AS IS", WITHOUT WARRANTY OF ANY KIND, EXPRESS OR IMPLIED, INCLUDING BUT NOT LIMITED TO THE WARRANTIES OF MERCHANTABILITY, FITNESS FOR A PARTICULAR PURPOSE AND NONINFRINGEMENT. IN NO EVENT SHALL THE AUTHORS OR COPYRIGHT HOLDERS BE LIABLE FOR ANY CLAIM, DAMAGES OR OTHER LIABILITY, WHETHER IN AN ACTION OF CONTRACT, TORT OR OTHERWISE, ARISING FROM, OUT OF OR IN CONNECTION WITH THE SOFTWARE OR THE USE OR OTHER DEALINGS IN THESOFTWARE. # (C) Copyright 2002-2006 # Wolfgang Denk, DENX Software Engineering, wd@denx.de. #

	# See file CREDITS for list of people who contributed to this # project. # # This program is free software; you can redistribute it and/or # modify it under the terms of the GNU General Public License as # published by the Free Software Foundation; either version 2 of # the License, or (at your option) any later version. # # This program is distributed in the hope that it will be useful, # but WITHOUT ANY WARRANTY; without even the implied warranty of # MERCHANTABILITY or FITNESS FOR A PARTICULAR PURPOSE. See the # GNU General Public License for more details. # # You should have received a copy of the GNU General Public License # along with this program; if not, write to the Free Software # Foundation, Inc., 59 Temple Place, Suite 330, Boston, # MA 02111-1307 USA #
lua	Lua License ---------- Lua is licensed under the terms of the MIT license reproduced below. This means that Lua is free software and can be used for both academic and commercial purposes at absolutely no cost. For details and rationale, see http://www.lua.org/license.html . ========== Copyright (C) 1994-2008 Lua.org, PUC-Rio. Permission is hereby granted, free of charge, to any person obtaining a copy of this software and associated documentation files (the "Software"), to deal in the Software without restriction, including without limitation the rights to use, copy, modify, merge, publish, distribute, sublicense, and/or sell copies of the Software, and to permit persons to whom the Software is furnished to do so, subject to the following conditions: The above copyright notice and this permission notice shall be included in all copies or substantial portions of the Software. THE SOFTWARE IS PROVIDED "AS IS", WITHOUT WARRANTY OF ANY KIND, EXPRESS OR IMPLIED, INCLUDING BUT NOT LIMITED TO THE WARRANTIES OF MERCHANTABILITY, FITNESS FOR A PARTICULAR PURPOSE AND NONINFRINGEMENT. IN NO EVENT SHALL THE AUTHORS OR COPYRIGHT HOLDERS BE LIABLE FOR ANY CLAIM, DAMAGES OR OTHER LIABILITY, WHETHER IN AN ACTION OF CONTRACT, TORT OR

	OTHERWISE, ARISING FROM, OUT OF OR IN CONNECTION WITH THE SOFTWARE OR THE USE OR OTHER DEALINGS IN THE SOFTWARE. # (C) Copyright 2002-2006 # Wolfgang Denk, DENX Software Engineering, wd@denx.de. # # See file CREDITS for list of people who contributed to this # project. # # This program is free software; you can redistribute it and/or # modify it under the terms of the GNU General Public License as # published by the Free Software Foundation; either version 2 of # the License, or (at your option) any later version. # # This program is distributed in the hope that it will be useful, # but WITHOUT ANY WARRANTY; without even the implied warranty of # MERCHANTABILITY or FITNESS FOR A PARTICULAR PURPOSE. See the # GNU General Public License for more details. # # You should have received a copy of the GNU General Public License # along with this program; if not, write to the Free Software # Foundation, Inc., 59 Temple Place, Suite 330, Boston, # MA 02111-1307 USA #
LuCi	Apache License Version 2.0, January 2004 http://www.apache.org/licenses/ TERMS AND CONDITIONS FOR USE, REPRODUCTION, AND DISTRIBUTION 1. Definitions. "License" shall mean the terms and conditions for use, reproduction, and distribution as defined by Sections 1 through 9 of this document. "Licensor" shall mean the copyright owner or entity authorized by the copyright owner that is granting the License. "Legal Entity" shall mean the union of the acting entity and all other entities that control, are controlled by, or are under common control with that entity. For the purposes of this definition, "control" means (i) the power, direct or indirect, to cause the direction or management of such entity, whether by contract or otherwise, or (ii) ownership of fifty percent (50%) or more of the outstanding shares, or (iii) beneficial ownership of such entity. "You" (or "Your") shall mean an individual or Legal Entity exercising permissions granted by this License. "Source" form shall mean the preferred form for making modifications, including but not limited to software source code, documentation source, and configuration

files.

"Object" form shall mean any form resulting from mechanical transformation or translation of a Source form, including but not limited to compiled object code, generated documentation, and conversions to other media types.

"Work" shall mean the work of authorship, whether in Source or Object form, made available under the License, as indicated by a copyright notice that is included in or attached to the work (an example is provided in the Appendix below).

"Derivative Works" shall mean any work, whether in Source or Object form, that is based on (or derived from) the Work and for which the editorial revisions, annotations, elaborations, or other modifications represent, as a whole, an original work of authorship. For the purposes of this License, Derivative Works shall not include works that remain separable from, or merely link (or bind by name) to the interfaces of, the Work and Derivative Works thereof.

"Contribution" shall mean any work of authorship, including the original version of the Work and any modifications or additions to that Work or Derivative Works thereof, that is intentionally submitted to Licensor for inclusion in the Work by the copyright owner or by an individual or Legal Entity authorized to submit on behalf of the copyright owner. For the purposes of this definition, "submitted" means any form of electronic, verbal, or written communication sent to the Licensor or its representatives, including but not limited to communication on electronic mailing lists, source code control systems, and issue tracking systems that are managed by, or on behalf of, the Licensor for the purpose of discussing and improving the Work, but excluding communication that is conspicuously marked or otherwise designated in writing by the copyright owner as "Not a Contribution."

"Contributor" shall mean Licensor and any individual or Legal Entity on behalf of whom a Contribution has been received by Licensor and subsequently incorporated within the Work.

2. Grant of Copyright License. Subject to the terms and conditions of this License, each Contributor hereby grants to You a perpetual, worldwide, non-exclusive, no-charge, royalty-free, irrevocable copyright license to reproduce, prepare Derivative Works of, publicly display, publicly perform, sublicense, and distribute the Work and such Derivative Works in Source or Object form.

3. Grant of Patent License. Subject to the terms and conditions of this License, each Contributor hereby grants to You a perpetual, worldwide, non-exclusive, no-charge, royalty-free, irrevocable (except as stated in this section) patent license to make, have made, use, offer to sell, sell, import, and otherwise transfer the Work, where such license applies only to those patent claims licensable by such Contributor that are necessarily infringed by their Contribution(s) alone or by combination of their Contribution(s) with the Work to which such Contribution(s) was submitted. If You institute patent litigation against any entity (including a cross-claim or counterclaim in a lawsuit) alleging that the Work or a Contribution incorporated within the Work constitutes direct or contributory patent infringement, then any patent licenses granted to You under this License for that Work shall terminate as of the date such litigation is filed.

4. Redistribution. You may reproduce and distribute copies of the Work or Derivative Works thereof in any medium, with or without modifications, and in Source or Object form, provided that You meet the following conditions:

You must give any other recipients of the Work or Derivative Works a copy of this License; and

You must cause any modified files to carry prominent notices stating that You changed the files; and
You must retain, in the Source form of any Derivative Works that You distribute, all copyright, patent, trademark, and attribution notices from the Source form of the Work, excluding those notices that do not pertain to any part of the Derivative Works; and
If the Work includes a "NOTICE" text file as part of its distribution, then any Derivative Works that You distribute must include a readable copy of the attribution notices contained within such NOTICE file, excluding those notices that do not pertain to any part of the Derivative Works, in at least one of the following places: within a NOTICE text file distributed as part of the Derivative Works; within the Source form or documentation, if provided along with the Derivative Works; or, within a display generated by the Derivative Works, if and wherever such third-party notices normally appear. The contents of the NOTICE file are for informational purposes only and do not modify the License. You may add Your own attribution notices within Derivative Works that You distribute, alongside or as an addendum to the NOTICE text from the Work, provided that such additional attribution notices cannot be construed as modifying the License.

You may add Your own copyright statement to Your modifications and may provide additional or different license terms and conditions for use, reproduction, or distribution of Your modifications, or for any such Derivative Works as a whole, provided Your use, reproduction, and distribution of the Work otherwise complies with the conditions stated in this License.
5. Submission of Contributions. Unless You explicitly state otherwise, any Contribution intentionally submitted for inclusion in the Work by You to the Licensor shall be under the terms and conditions of this License, without any additional terms or conditions. Notwithstanding the above, nothing herein shall supersede or modify the terms of any separate license agreement you may have executed with Licensor regarding such Contributions.

6. Trademarks. This License does not grant permission to use the trade names, trademarks, service marks, or product names of the Licensor, except as required for reasonable and customary use in describing the origin of the Work and reproducing the content of the NOTICE file.

7. Disclaimer of Warranty. Unless required by applicable law or agreed to in writing, Licensor provides the Work (and each Contributor provides its Contributions) on an "AS IS" BASIS, WITHOUT WARRANTIES OR CONDITIONS OF ANY KIND, either express or implied, including, without limitation, any warranties or conditions of TITLE, NON-INFRINGEMENT, MERCHANTABILITY, or FITNESS FOR A PARTICULAR PURPOSE. You are solely responsible for determining the appropriateness of using or redistributing the Work and assume any risks associated with Your exercise of permissions under this License.

8. Limitation of Liability. In no event and under no legal theory, whether in tort (including negligence), contract, or otherwise, unless required by applicable law (such as deliberate and grossly negligent acts) or agreed to in writing, shall any Contributor be liable to You for damages, including any direct, indirect, special, incidental, or consequential damages of any character arising as a result of this License or out of the use or inability to use the Work (including but not limited to damages for loss of goodwill, work stoppage, computer failure or malfunction, or any and all other commercial damages or losses), even if such Contributor has been advised of the possibility of such damages.

9. Accepting Warranty or Additional Liability. While redistributing the Work or Derivative Works thereof, You may choose to offer, and charge a fee for, acceptance of support, warranty, indemnity, or other liability obligations and/or

	rights consistent with this License. However, in accepting such obligations, You may act only on Your own behalf and on Your sole responsibility, not on behalf of any other Contributor, and only if You agree to indemnify, defend, and hold each Contributor harmless for any liability incurred by, or claims asserted against, such Contributor by reason of your accepting any such warranty or additional liability. END OF TERMS AND CONDITIONS --[[LuCI - Lua Development Framework Copyright 2009 Steven Barth <steven@midlink.org> Licensed under the Apache License, Version 2.0 (the "License"); you may not use this file except in compliance with the License. You may obtain a copy of the License at http://www.apache.org/licenses/LICENSE-2.0 Id]]
mtd	Copyright © 2005 Waldemar Brodkorb <wbx@dass-it.de> Copyright (C) 2005-2009 Felix Fietkau < ndb@openwrt.org> # # Copyright (C) 2006-2009 OpenWrt.org # # This is free software, licensed under the GNU General Public License v2. # See full license text on page 4-25. # (C) Copyright 2002-2006 # Wolfgang Denk, DENX Software Engineering, wd@denx.de. # # See file CREDITS for list of people who contributed to this # project. # # This program is free software; you can redistribute it and/or # modify it under the terms of the GNU General Public License as # published by the Free Software Foundation; either version 2 of # the License, or (at your option) any later version. # # This program is distributed in the hope that it will be useful, # but WITHOUT ANY WARRANTY; without even the implied warranty of # MERCHANTABILITY or FITNESS FOR A PARTICULAR PURPOSE. See the # GNU General Public License for more details. # # You should have received a copy of the GNU General Public License # along with this program; if not, write to the Free Software # Foundation, Inc., 59 Temple Place, Suite 330, Boston, # MA 02111-1307 USA #

ncurses

Copyright (c) 1998-2004,2006 Free Software Foundation, Inc.

Permission is hereby granted, free of charge, to any person obtaining a copy of this software and associated documentation files (the "Software"), to deal in the Software without restriction, including without limitation the rights to use, copy, modify, merge, publish, distribute, distribute with modifications, sublicense, and/or sell copies of the Software, and to permit persons to whom the Software is furnished to do so, subject to the following conditions:

The above copyright notice and this permission notice shall be included in all copies or substantial portions of the Software.

THE SOFTWARE IS PROVIDED "AS IS", WITHOUT WARRANTY OF ANY KIND, EXPRESS OR IMPLIED, INCLUDING BUT NOT LIMITED TO THE WARRANTIES OF MERCHANTABILITY, FITNESS FOR A PARTICULAR PURPOSE AND NONINFRINGEMENT. IN NO EVENT SHALL THE ABOVE COPYRIGHT HOLDERS BE LIABLE FOR ANY CLAIM, DAMAGES OR OTHER LIABILITY, WHETHER IN AN ACTION OF CONTRACT, TORT OR OTHERWISE, ARISING FROM, OUT OF OR IN CONNECTION WITH THE SOFTWARE OR THE USE OR OTHER DEALINGS IN THE SOFTWARE.

Except as contained in this notice, the name(s) of the above copyright holders shall not be used in advertising or otherwise to promote the sale, use or other dealings in this Software without prior written authorization.

(C) Copyright 2002-2006
Wolfgang Denk, DENX Software Engineering, wd@denx.de.
#
See file CREDITS for list of people who contributed to this
project.
#
This program is free software; you can redistribute it and/or
modify it under the terms of the GNU General Public License as
published by the Free Software Foundation; either version 2 of
the License, or (at your option) any later version.
#
This program is distributed in the hope that it will be useful,
but WITHOUT ANY WARRANTY; without even the implied warranty of
MERCHANTABILITY or FITNESS FOR A PARTICULAR PURPOSE. See the
GNU General Public License for more details.
#
You should have received a copy of the GNU General Public License
along with this program; if not, write to the Free Software
Foundation, Inc., 59 Temple Place, Suite 330, Boston,
MA 02111-1307 USA
#

nginx	Copyright (C) 2002-2012 Igor Sysoev Copyright (C) 2011,2012 Nginx, Inc. Redistribution and use in source and binary forms, with or without modification, are permitted provided that the following conditions are met: 1. Redistributions of source code must retain the above copyright notice, this list of conditions and the following disclaimer. 2. Redistributions in binary form must reproduce the above copyright notice, this list of conditions and the following disclaimer in the documentation and/or other materials provided with the distribution. THIS SOFTWARE IS PROVIDED BY AUTHOR AND CONTRIBUTORS ``AS IS'' AND ANY EXPRESS OR IMPLIED WARRANTIES, INCLUDING, BUT NOT LIMITED TO, THE IMPLIED WARRANTIES OF MERCHANTABILITY AND FITNESS FOR A PARTICULAR PURPOSE ARE DISCLAIMED. IN NO EVENT SHALL AUTHOR OR CONTRIBUTORS BE LIABLE FOR ANY DIRECT, INDIRECT, INCIDENTAL, SPECIAL, EXEMPLARY, OR CONSEQUENTIAL DAMAGES (INCLUDING, BUT NOT LIMITED TO, PROCUREMENT OF SUBSTITUTE GOODS OR SERVICES; LOSS OF USE, DATA, OR PROFITS; OR BUSINESS INTERRUPTION) HOWEVER CAUSED AND ON ANY THEORY OF LIABILITY, WHETHER IN CONTRACT, STRICT LIABILITY, OR TORT (INCLUDING NEGLIGENCE OR OTHERWISE) ARISING IN ANY WAY OUT OF THE USE OF THIS SOFTWARE, EVEN IF ADVISED OF THE POSSIBILITY OF SUCH DAMAGE. # (C) Copyright 2002-2006 # Wolfgang Denk, DENX Software Engineering, wd@denx.de. # # See file CREDITS for list of people who contributed to this # project. # # This program is free software; you can redistribute it and/or # modify it under the terms of the GNU General Public License as # published by the Free Software Foundation; either version 2 of # the License, or (at your option) any later version. # # This program is distributed in the hope that it will be useful, # but WITHOUT ANY WARRANTY; without even the implied warranty of # MERCHANTABILITY or FITNESS FOR A PARTICULAR PURPOSE. See the # GNU General Public License for more details. # # You should have received a copy of the GNU General Public License # along with this program; if not, write to the Free Software # Foundation, Inc., 59 Temple Place, Suite 330, Boston, # MA 02111-1307 USA #
Net-snmp	Copyright 1989, 1991, 1992 by Carnegie Mellon University Derivative Work - 1996, 1998-2000 Copyright 1996, 1998-2000 The Regents of the University of California

Networks Associates Technology, Inc copyright notice (BSD)
Copyright (c) 2001-2003, Networks Associates Technology, Inc
Cambridge Broadband Ltd. copyright notice (BSD)
Portions of this code are copyright (c) 2001-2003, Cambridge Broadband Ltd.
Copyright © 2003 Sun Microsystems, Inc., 4150 Network Circle, Santa Clara, California 95054, U.S.A.
Copyright (c) 2003-2008, Sparta, Inc
Copyright (c) 2004, Cisco, Inc and Information Network
Center of Beijing University of Posts and Telecommunications.
Fabasoft R&D Software GmbH & Co KG copyright notice (BSD)
Copyright (c) Fabasoft R&D Software GmbH & Co KG, 2003 oss@fabasoft.com
Author: Bernhard Penz bernhard.penz@fabasoft.com

(C) Copyright 2002-2006
Wolfgang Denk, DENX Software Engineering, wd@denx.de.
#
See file CREDITS for list of people who contributed to this
project.
#
This program is free software; you can redistribute it and/or
modify it under the terms of the GNU General Public License as
published by the Free Software Foundation; either version 2 of
the License, or (at your option) any later version.
#
This program is distributed in the hope that it will be useful,
but WITHOUT ANY WARRANTY; without even the implied warranty of
MERCHANTABILITY or FITNESS FOR A PARTICULAR PURPOSE. See the
GNU General Public License for more details.
#
You should have received a copy of the GNU General Public License
along with this program; if not, write to the Free Software
Foundation, Inc., 59 Temple Place, Suite 330, Boston,
MA 02111-1307 USA
#

BSD like:
Permission to use, copy, modify and distribute this software and its documentation for any purpose and without fee is hereby granted, provided that the above copyright notice appears in all copies and that both that copyright notice and this permission notice appear in supporting documentation, and that the name of CMU and The Regents of the University of California not be used in advertising or publicity pertaining to distribution of the software without specific written permission.

CMU AND THE REGENTS OF THE UNIVERSITY OF CALIFORNIA DISCLAIM ALL WARRANTIES WITH REGARD TO THIS SOFTWARE, INCLUDING ALL IMPLIED WARRANTIES OF MERCHANTABILITY AND FITNESS. IN NO EVENT SHALL CMU

OR THE REGENTS OF THE UNIVERSITY OF CALIFORNIA BE LIABLE FOR ANY SPECIAL, INDIRECT OR CONSEQUENTIAL DAMAGES OR ANY DAMAGES WHATSOEVER RESULTING FROM THE LOSS OF USE, DATA OR PROFITS, WHETHER IN AN ACTION OF CONTRACT, NEGLIGENCE OR OTHER TORTIOUS ACTION, ARISING OUT OF OR IN CONNECTION WITH THE USE OR PERFORMANCE OF THIS SOFTWARE.
BSD:
Redistribution and use in source and binary forms, with or without modification, are permitted provided that the following conditions are met:

* Redistributions of source code must retain the above copyright notice, this list of conditions and the following disclaimer.

* Redistributions in binary form must reproduce the above copyright notice, this list of conditions and the following disclaimer in the documentation and/or other materials provided with the distribution.

* Neither the name of the Networks Associates Technology, Inc nor the names of its contributors may be used to endorse or promote products derived from this software without specific prior written permission.

THIS SOFTWARE IS PROVIDED BY THE COPYRIGHT HOLDERS AND CONTRIBUTORS ``AS IS'' AND ANY EXPRESS OR IMPLIED WARRANTIES, INCLUDING, BUT NOT LIMITED TO, THE IMPLIED WARRANTIES OF MERCHANTABILITY AND FITNESS FOR A PARTICULAR PURPOSE ARE DISCLAIMED. IN NO EVENT SHALL THE COPYRIGHT HOLDERS OR CONTRIBUTORS BE LIABLE FOR ANY DIRECT, INDIRECT, INCIDENTAL, SPECIAL, EXEMPLARY, OR CONSEQUENTIAL DAMAGES (INCLUDING, BUT NOT LIMITED TO, PROCUREMENT OF SUBSTITUTE GOODS OR SERVICES; LOSS OF USE, DATA, OR PROFITS; OR BUSINESS INTERRUPTION) HOWEVER CAUSED AND ON ANY THEORY OF LIABILITY, WHETHER IN CONTRACT, STRICT LIABILITY, OR TORT (INCLUDING NEGLIGENCE OR OTHERWISE) ARISING IN ANY WAY OUT OF THE USE OF THIS SOFTWARE, EVEN IF ADVISED OF THE POSSIBILITY OF SUCH DAMAGE.

(C) Copyright 2002-2006
Wolfgang Denk, DENX Software Engineering, wd@denx.de.
#
See file CREDITS for list of people who contributed to this
project.
#
This program is free software; you can redistribute it and/or
modify it under the terms of the GNU General Public License as
published by the Free Software Foundation; either version 2 of
the License, or (at your option) any later version.
#
This program is distributed in the hope that it will be useful,
but WITHOUT ANY WARRANTY; without even the implied warranty of

	# MERCHANTABILITY or FITNESS FOR A PARTICULAR PURPOSE. See the # GNU General Public License for more details. # # You should have received a copy of the GNU General Public License # along with this program; if not, write to the Free Software # Foundation, Inc., 59 Temple Place, Suite 330, Boston, # MA 02111-1307 USA #
openssh	# # Copyright (C) 2006, 2008-2011 OpenWrt.org # # This is free software, licensed under the GNU General Public License v2. # # See full license text on page 4-25. # (C) Copyright 2002-2006 # Wolfgang Denk, DENX Software Engineering, wd@denx.de. # # See file CREDITS for list of people who contributed to this # project. # # This program is free software; you can redistribute it and/or # modify it under the terms of the GNU General Public License as # published by the Free Software Foundation; either version 2 of # the License, or (at your option) any later version. # # This program is distributed in the hope that it will be useful, # but WITHOUT ANY WARRANTY; without even the implied warranty of # MERCHANTABILITY or FITNESS FOR A PARTICULAR PURPOSE. See the # GNU General Public License for more details. # # You should have received a copy of the GNU General Public License # along with this program; if not, write to the Free Software # Foundation, Inc., 59 Temple Place, Suite 330, Boston, # MA 02111-1307 USA #
openssl	LICENSE ISSUES ========== The OpenSSL toolkit stays under a dual license, i.e. both the conditions of the OpenSSL License and the original SSLeay license apply to the toolkit. See below for the actual license texts. Actually both licenses are BSD-style Open Source licenses. In case of any license issues related to OpenSSL please contact openssl-

core@openssl.org.

OpenSSL License

/*
==========
=
* Copyright (c) 1998-2011 The OpenSSL Project. All rights reserved.
*
* Redistribution and use in source and binary forms, with or without
* modification, are permitted provided that the following conditions
* are met:
*
* 1. Redistributions of source code must retain the above copyright
* notice, this list of conditions and the following disclaimer.
*
* 2. Redistributions in binary form must reproduce the above copyright
* notice, this list of conditions and the following disclaimer in
* the documentation and/or other materials provided with the
* distribution.
*
* 3. All advertising materials mentioning features or use of this
* software must display the following acknowledgment:
* "This product includes software developed by the OpenSSL Project
* for use in the OpenSSL Toolkit. (http://www.openssl.org/)"
*
* 4. The names "OpenSSL Toolkit" and "OpenSSL Project" must not be used to
* endorse or promote products derived from this software without
* prior written permission. For written permission, please contact
* openssl-core@openssl.org.
*
* 5. Products derived from this software may not be called "OpenSSL"
* nor may "OpenSSL" appear in their names without prior written
* permission of the OpenSSL Project.
*
* 6. Redistributions of any form whatsoever must retain the following
acknowledgment:
* "This product includes software developed by the OpenSSL Project
* for use in the OpenSSL Toolkit (http://www.openssl.org/)"
*
* THIS SOFTWARE IS PROVIDED BY THE OpenSSL PROJECT ``AS IS'' AND ANY
EXPRESSED OR IMPLIED WARRANTIES, INCLUDING, BUT NOT LIMITED TO, THE
IMPLIED WARRANTIES OF MERCHANTABILITY AND FITNESS FOR A PARTICULAR
PURPOSE ARE DISCLAIMED. IN NO EVENT SHALL THE OpenSSL PROJECT OR
ITS CONTRIBUTORS BE LIABLE FOR ANY DIRECT, INDIRECT, INCIDENTAL,
SPECIAL, EXEMPLARY, OR CONSEQUENTIAL DAMAGES (INCLUDING, BUT NOT
LIMITED TO, PROCUREMENT OF SUBSTITUTE GOODS OR SERVICES; LOSS OF
USE, DATA, OR PROFITS; OR BUSINESS INTERRUPTION) HOWEVER CAUSED

```
AND ON ANY THEORY OF LIABILITY, WHETHER IN CONTRACT, STRICT LIABILITY,
OR TORT (INCLUDING NEGLIGENCE OR OTHERWISE) ARISING IN ANY WAY OUT
OF THE USE OF THIS SOFTWARE, EVEN IF ADVISED OF THE POSSIBILITY OF
SUCH DAMAGE.
 *
====================================================================
=
 *
 * This product includes cryptographic software written by Eric Young
 * (eay@cryptsoft.com).  This product includes software written by Tim
 * Hudson (tjh@cryptsoft.com).
 *
 */

 Original SSLeay License
 -----------------------

/* Copyright (C) 1995-1998 Eric Young (eay@cryptsoft.com)
 * All rights reserved.
 *
 * This package is an SSL implementation written
 * by Eric Young (eay@cryptsoft.com).
 * The implementation was written so as to conform with Netscapes SSL.
 *
 * This library is free for commercial and non-commercial use as long as
 * the following conditions are aheared to.  The following conditions
 * apply to all code found in this distribution, be it the RC4, RSA,
 * lhash, DES, etc., code; not just the SSL code.  The SSL documentation
 * included with this distribution is covered by the same copyright terms
 * except that the holder is Tim Hudson (tjh@cryptsoft.com).
 *
 * Copyright remains Eric Young's, and as such any Copyright notices in
 * the code are not to be removed.
 * If this package is used in a product, Eric Young should be given attribution
 * as the author of the parts of the library used.
 * This can be in the form of a textual message at program startup or
 * in documentation (online or textual) provided with the package.
 *
 * Redistribution and use in source and binary forms, with or without
 * modification, are permitted provided that the following conditions
 * are met:
 * 1. Redistributions of source code must retain the copyright
 *    notice, this list of conditions and the following disclaimer.
 * 2. Redistributions in binary form must reproduce the above copyright
 *    notice, this list of conditions and the following disclaimer in the
 *    documentation and/or other materials provided with the distribution.
 * 3. All advertising materials mentioning features or use of this software
 *    must display the following acknowledgement:
 *    "This product includes cryptographic software written by
```

```
 *    Eric Young (eay@cryptsoft.com)"
 *    The word 'cryptographic' can be left out if the rouines from the library
 *    being used are not cryptographic related :-).
 * 4. If you include any Windows specific code (or a derivative thereof) from
 *    the apps directory (application code) you must include an acknowledgement:
 *    "This product includes software written by Tim Hudson (tjh@cryptsoft.com)"
 *
 * THIS SOFTWARE IS PROVIDED BY ERIC YOUNG ``AS IS'' AND
 * ANY EXPRESS OR IMPLIED WARRANTIES, INCLUDING, BUT NOT LIMITED TO,
THE IMPLIED WARRANTIES OF MERCHANTABILITY AND FITNESS FOR A
PARTICULAR PURPOSE ARE DISCLAIMED.  IN NO EVENT SHALL THE AUTHOR OR
CONTRIBUTORS BE LIABLE FOR ANY DIRECT, INDIRECT, INCIDENTAL, SPECIAL,
EXEMPLARY, OR CONSEQUENTIAL DAMAGES (INCLUDING, BUT NOT LIMITED
TO, PROCUREMENT OF SUBSTITUTE GOODS OR SERVICES; LOSS OF USE,
DATA, OR PROFITS; OR BUSINESS INTERRUPTION) HOWEVER CAUSED AND ON
ANY THEORY OF LIABILITY, WHETHER IN CONTRACT, STRICT LIABILITY, OR
TORT (INCLUDING NEGLIGENCE OR OTHERWISE) ARISING IN ANY WAY OUT OF
THE USE OF THIS SOFTWARE, EVEN IF ADVISED OF THE POSSIBILITY OF SUCH
DAMAGE.
 *
 * The licence and distribution terms for any publically available version or
 * derivative of this code cannot be changed.  i.e. this code cannot simply be
 * copied and put under another distribution licence
 * [including the GNU Public Licence.]
 */

# (C) Copyright 2002-2006
# Wolfgang Denk, DENX Software Engineering, wd@denx.de.
#
# See file CREDITS for list of people who contributed to this
# project.
#
# This program is free software; you can redistribute it and/or
# modify it under the terms of the GNU General Public License as
# published by the Free Software Foundation; either version 2 of
# the License, or (at your option) any later version.
#
# This program is distributed in the hope that it will be useful,
# but WITHOUT ANY WARRANTY; without even the implied warranty of
# MERCHANTABILITY or FITNESS FOR A PARTICULAR PURPOSE. See the
# GNU General Public License for more details.
#
# You should have received a copy of the GNU General Public License
# along with this program; if not, write to the Free Software
# Foundation, Inc., 59 Temple Place, Suite 330, Boston,
# MA 02111-1307 USA
#
```

opkg	GNU GENERAL PUBLIC LICENSE Version 2, June 1991 Copyright (C) 1989, 1991 Free Software Foundation, Inc. 59 Temple Place, Suite 330, Boston, MA 02111-1307 USA Everyone is permitted to copy and distribute verbatim copies of this license document, but changing it is not allowed. See full license text on page 4-25. # (C) Copyright 2002-2006 # Wolfgang Denk, DENX Software Engineering, wd@denx.de. # # See file CREDITS for list of people who contributed to this # project. # # This program is free software; you can redistribute it and/or # modify it under the terms of the GNU General Public License as # published by the Free Software Foundation; either version 2 of # the License, or (at your option) any later version. # # This program is distributed in the hope that it will be useful, # but WITHOUT ANY WARRANTY; without even the implied warranty of # MERCHANTABILITY or FITNESS FOR A PARTICULAR PURPOSE. See the # GNU General Public License for more details. # # You should have received a copy of the GNU General Public License # along with this program; if not, write to the Free Software # Foundation, Inc., 59 Temple Place, Suite 330, Boston, # MA 02111-1307 USA #
pcre	Copyright (c) 1997-2010 University of Cambridge Release 8 of PCRE is distributed under the terms of the "BSD" licence, as specified below. The documentation for PCRE, supplied in the "doc" directory, is distributed under the same terms as the software itself. THE MAIN PCRE LIBRARY ---------- Written by: Philip Hazel Email local part: ph10 Email domain: cam.ac.uk University of Cambridge Computing Service, Cambridge, England. Copyright (c) 1997-2010 University of Cambridge All rights reserved THE C++ WRAPPER LIBRARY

	---------- Written by: Google Inc. Copyright (c) 2007-2010 Google Inc All rights reserved # (C) Copyright 2002-2006 # Wolfgang Denk, DENX Software Engineering, wd@denx.de. # # See file CREDITS for list of people who contributed to this # project. # # This program is free software; you can redistribute it and/or # modify it under the terms of the GNU General Public License as # published by the Free Software Foundation; either version 2 of # the License, or (at your option) any later version. # # This program is distributed in the hope that it will be useful, # but WITHOUT ANY WARRANTY; without even the implied warranty of # MERCHANTABILITY or FITNESS FOR A PARTICULAR PURPOSE. See the # GNU General Public License for more details. # # You should have received a copy of the GNU General Public License # along with this program; if not, write to the Free Software # Foundation, Inc., 59 Temple Place, Suite 330, Boston, # MA 02111-1307 USA #
procps	GNU GENERAL PUBLIC LICENSE Version 2, June 1991 Copyright (C) 1989, 1991 Free Software Foundation, Inc. 59 Temple Place, Suite 330, Boston, MA 02111-1307 USA Everyone is permitted to copy and distribute verbatim copies of this license document, but changing it is not allowed. See full license text on page 4-25. # (C) Copyright 2002-2006 # Wolfgang Denk, DENX Software Engineering, wd@denx.de. # # See file CREDITS for list of people who contributed to this # project. # # This program is free software; you can redistribute it and/or # modify it under the terms of the GNU General Public License as # published by the Free Software Foundation; either version 2 of # the License, or (at your option) any later version. #

	# This program is distributed in the hope that it will be useful, # but WITHOUT ANY WARRANTY; without even the implied warranty of # MERCHANTABILITY or FITNESS FOR A PARTICULAR PURPOSE. See the # GNU General Public License for more details. # # You should have received a copy of the GNU General Public License # along with this program; if not, write to the Free Software # Foundation, Inc., 59 Temple Place, Suite 330, Boston, # MA 02111-1307 USA #
px5g	Copyright (C) 2009 Steven Barth <steven@midlink.org> Copyright (C) 2009 Paul Bakker <polarssl_maintainer at polarssl dot org> Copyright (C) 2006-2007 Pascal Vizeli <pvizeli@yahoo.de> This library is free software; you can redistribute it and/or Modify it under the terms of the GNU Lesser General Public License, version 2.1 as published by the Free Software Foundation. This library is distributed in the hope that it will be useful, but WITHOUT ANY WARRANTY; without even the implied warranty of MERCHANTABILITY or FITNESS FOR A PARTICULAR PURPOSE. See the GNU Lesser General Public License for more details. See full license text on page 4-47. # (C) Copyright 2002-2006 # Wolfgang Denk, DENX Software Engineering, wd@denx.de. # # See file CREDITS for list of people who contributed to this # project. # # This program is free software; you can redistribute it and/or # modify it under the terms of the GNU General Public License as # published by the Free Software Foundation; either version 2 of # the License, or (at your option) any later version. # # This program is distributed in the hope that it will be useful, # but WITHOUT ANY WARRANTY; without even the implied warranty of # MERCHANTABILITY or FITNESS FOR A PARTICULAR PURPOSE. See the # GNU General Public License for more details. # # You should have received a copy of the GNU General Public License # along with this program; if not, write to the Free Software # Foundation, Inc., 59 Temple Place, Suite 330, Boston, # MA 02111-1307 USA #

relayed	Copyright (C) 2010-2011 OpenWrt.org This is free software, licensed under the GNU General Public License v2. See /LICENSE for more information. See full license text on page 4-25. # (C) Copyright 2002-2006 # Wolfgang Denk, DENX Software Engineering, wd@denx.de. # # See file CREDITS for list of people who contributed to this # project. # # This program is free software; you can redistribute it and/or # modify it under the terms of the GNU General Public License as # published by the Free Software Foundation; either version 2 of # the License, or (at your option) any later version. # # This program is distributed in the hope that it will be useful, # but WITHOUT ANY WARRANTY; without even the implied warranty of # MERCHANTABILITY or FITNESS FOR A PARTICULAR PURPOSE. See the # GNU General Public License for more details. # # You should have received a copy of the GNU General Public License # along with this program; if not, write to the Free Software # Foundation, Inc., 59 Temple Place, Suite 330, Boston, # MA 02111-1307 USA #
swconfig	Copyright (C) 2008-2009 Felix Fietkau <nbd@openwrt.org> Copyright (C) 2010 Martin Mares <mj@ucw.cz> # # Copyright (C) 2008-2010 OpenWrt.org # # This is free software, licensed under the GNU General Public License v2. # See /LICENSE for more information. #

	See full license text on page 4-25. # (C) Copyright 2002-2006 # Wolfgang Denk, DENX Software Engineering, wd@denx.de. # # See file CREDITS for list of people who contributed to this # project. # # This program is free software; you can redistribute it and/or # modify it under the terms of the GNU General Public License as # published by the Free Software Foundation; either version 2 of # the License, or (at your option) any later version. # # This program is distributed in the hope that it will be useful, # but WITHOUT ANY WARRANTY; without even the implied warranty of # MERCHANTABILITY or FITNESS FOR A PARTICULAR PURPOSE. See the # GNU General Public License for more details. # # You should have received a copy of the GNU General Public License # along with this program; if not, write to the Free Software # Foundation, Inc., 59 Temple Place, Suite 330, Boston, # MA 02111-1307 USA #
Syslog-ng	GNU GENERAL PUBLIC LICENSE Version 2, June 1991 See full license text on page 4-25. # (C) Copyright 2002-2006 # Wolfgang Denk, DENX Software Engineering, wd@denx.de. # # See file CREDITS for list of people who contributed to this # project. # # This program is free software; you can redistribute it and/or # modify it under the terms of the GNU General Public License as # published by the Free Software Foundation; either version 2 of # the License, or (at your option) any later version. # # This program is distributed in the hope that it will be useful, # but WITHOUT ANY WARRANTY; without even the implied warranty of # MERCHANTABILITY or FITNESS FOR A PARTICULAR PURPOSE. See the # GNU General Public License for more details. # # You should have received a copy of the GNU General Public License # along with this program; if not, write to the Free Software

	# Foundation, Inc., 59 Temple Place, Suite 330, Boston, # MA 02111-1307 USA #
tcp_wrappers	Copyright 1995 by Wietse Venema. All rights reserved. Some individual files may be covered by other copyrights. Copyright (c) 1987 Regents of the University of California. All rights reserved. /********** ** * Copyright 1995 by Wietse Venema. All rights reserved. Some individual * files may be covered by other copyrights. * * This material was originally written and compiled by Wietse Venema at * Eindhoven University of Technology, The Netherlands, in 1990, 1991, * 1992, 1993, 1994 and 1995. * * Redistribution and use in source and binary forms, with or without * modification, are permitted provided that this entire copyright notice * is duplicated in all such copies. * * This software is provided "as is" and without any expressed or implied * warranties, including, without limitation, the implied warranties of * merchantibility and fitness for any particular purpose. ********** **/ # (C) Copyright 2002-2006 # Wolfgang Denk, DENX Software Engineering, wd@denx.de. # # See file CREDITS for list of people who contributed to this # project. # # This program is free software; you can redistribute it and/or # modify it under the terms of the GNU General Public License as # published by the Free Software Foundation; either version 2 of # the License, or (at your option) any later version. # # This program is distributed in the hope that it will be useful, # but WITHOUT ANY WARRANTY; without even the implied warranty of # MERCHANTABILITY or FITNESS FOR A PARTICULAR PURPOSE. See the # GNU General Public License for more details. # # You should have received a copy of the GNU General Public License # along with this program; if not, write to the Free Software # Foundation, Inc., 59 Temple Place, Suite 330, Boston, # MA 02111-1307 USA #

tcpdump	Copyright (c) 2001 Seth Webster <swebster@sst.ll.mit.edu> Copyright (C) Andrew Tridgell 1995-1999 Copyright (c) 1988, 1989, 1990, 1991, 1992, 1993, 1994, 1995, 1996, 1997, 2000 The Regents of the University of California. All rights reserved. License: BSD Redistribution and use in source and binary forms, with or without modification, are permitted provided that the following conditions are met: 1. Redistributions of source code must retain the above copyright notice, this list of conditions and the following disclaimer. 2. Redistributions in binary form must reproduce the above copyright notice, this list of conditions and the following disclaimer in the documentation and/or other materials provided with the distribution. 3. The names of the authors may not be used to endorse or promote products derived from this software without specific prior written permission. THIS SOFTWARE IS PROVIDED ``AS IS'' AND WITHOUT ANY EXPRESS OR IMPLIED WARRANTIES, INCLUDING, WITHOUT LIMITATION, THE IMPLIED WARRANTIES OF MERCHANTABILITY AND FITNESS FOR A PARTICULAR PURPOSE. # (C) Copyright 2002-2006 # Wolfgang Denk, DENX Software Engineering, wd@denx.de. # # See file CREDITS for list of people who contributed to this # project. # # This program is free software; you can redistribute it and/or # modify it under the terms of the GNU General Public License as # published by the Free Software Foundation; either version 2 of # the License, or (at your option) any later version. # # This program is distributed in the hope that it will be useful, # but WITHOUT ANY WARRANTY; without even the implied warranty of # MERCHANTABILITY or FITNESS FOR A PARTICULAR PURPOSE. See the # GNU General Public License for more details. # # You should have received a copy of the GNU General Public License

	# along with this program; if not, write to the Free Software # Foundation, Inc., 59 Temple Place, Suite 330, Boston, # MA 02111-1307 USA #
uClibc++	LGPL v2.1 See full license text on page 4-47. GPL v2 See full license text on page 4-25. # (C) Copyright 2002-2006 # Wolfgang Denk, DENX Software Engineering, wd@denx.de. # # See file CREDITS for list of people who contributed to this # project. # # This program is free software; you can redistribute it and/or # modify it under the terms of the GNU General Public License as # published by the Free Software Foundation; either version 2 of # the License, or (at your option) any later version. # # This program is distributed in the hope that it will be useful, # but WITHOUT ANY WARRANTY; without even the implied warranty of # MERCHANTABILITY or FITNESS FOR A PARTICULAR PURPOSE. See the # GNU General Public License for more details. # # You should have received a copy of the GNU General Public License # along with this program; if not, write to the Free Software # Foundation, Inc., 59 Temple Place, Suite 330, Boston, # MA 02111-1307 USA #
Uboot-envtools	# # (C) Copyright 2002-2006 # Wolfgang Denk, DENX Software Engineering, wd@denx.de. # # See file CREDITS for list of people who contributed to this # project. # # This program is free software; you can redistribute it and/or # modify it under the terms of the GNU General Public License as # published by the Free Software Foundation; either version 2 of # the License, or (at your option) any later version. # # This program is distributed in the hope that it will be useful,

```
# but WITHOUT ANY WARRANTY; without even the implied warranty of
# MERCHANTABILITY or FITNESS FOR A PARTICULAR PURPOSE.  See the
# GNU General Public License for more details.
#
# You should have received a copy of the GNU General Public License
# along with this program; if not, write to the Free Software
# Foundation, Inc., 59 Temple Place, Suite 330, Boston,
# MA 02111-1307 USA
#
```

See full license text on page 4-25.

```
/* resolv.c: DNS Resolver
 *
 * Copyright (C) 1998  Kenneth Albanowski <kjahds@kjahds.com>,
 *                 The Silver Hammer Group, Ltd.
 *
 * This library is free software; you can redistribute it and/or
 * modify it under the terms of the GNU Library General Public
 * License as published by the Free Software Foundation; either
 * version 2 of the License, or (at your option) any later version.
 */
/*
 * Portions Copyright (c) 1985, 1993
 *    The Regents of the University of California.  All rights reserved.
 *
 * Redistribution and use in source and binary forms, with or without
 * modification, are permitted provided that the following conditions
 * are met:
 * 1. Redistributions of source code must retain the above copyright
 *    notice, this list of conditions and the following disclaimer.
 * 2. Redistributions in binary form must reproduce the above copyright
 *    notice, this list of conditions and the following disclaimer in the
 *    documentation and/or other materials provided with the distribution.
 * 4. Neither the name of the University nor the names of its contributors
 *    may be used to endorse or promote products derived from this software
 *    without specific prior written permission.
 *
 * THIS SOFTWARE IS PROVIDED BY THE REGENTS AND CONTRIBUTORS ``AS IS''
AND
 * ANY EXPRESS OR IMPLIED WARRANTIES, INCLUDING, BUT NOT LIMITED TO,
THE
 * IMPLIED WARRANTIES OF MERCHANTABILITY AND FITNESS FOR A
PARTICULAR PURPOSE
 * ARE DISCLAIMED.  IN NO EVENT SHALL THE REGENTS OR CONTRIBUTORS BE
LIABLE
 * FOR ANY DIRECT, INDIRECT, INCIDENTAL, SPECIAL, EXEMPLARY, OR
CONSEQUENTIAL
 * DAMAGES (INCLUDING, BUT NOT LIMITED TO, PROCUREMENT OF
SUBSTITUTE GOODS
 * OR SERVICES; LOSS OF USE, DATA, OR PROFITS; OR BUSINESS
INTERRUPTION)
 * HOWEVER CAUSED AND ON ANY THEORY OF LIABILITY, WHETHER IN
CONTRACT, STRICT
 * LIABILITY, OR TORT (INCLUDING NEGLIGENCE OR OTHERWISE) ARISING IN
ANY WAY
 * OUT OF THE USE OF THIS SOFTWARE, EVEN IF ADVISED OF THE POSSIBILITY
OF
 * SUCH DAMAGE.
```

	/ / * Portions Copyright (c) 1993 by Digital Equipment Corporation. * * Permission to use, copy, modify, and distribute this software for any * purpose with or without fee is hereby granted, provided that the above * copyright notice and this permission notice appear in all copies, and that * the name of Digital Equipment Corporation not be used in advertising or * publicity pertaining to distribution of the document or software without * specific, written prior permission. * * THE SOFTWARE IS PROVIDED "AS IS" AND DIGITAL EQUIPMENT CORP. DISCLAIMS ALL * WARRANTIES WITH REGARD TO THIS SOFTWARE, INCLUDING ALL IMPLIED WARRANTIES * OF MERCHANTABILITY AND FITNESS. IN NO EVENT SHALL DIGITAL EQUIPMENT * CORPORATION BE LIABLE FOR ANY SPECIAL, DIRECT, INDIRECT, OR CONSEQUENTIAL * DAMAGES OR ANY DAMAGES WHATSOEVER RESULTING FROM LOSS OF USE, DATA OR * PROFITS, WHETHER IN AN ACTION OF CONTRACT, NEGLIGENCE OR OTHER TORTIOUS * ACTION, ARISING OUT OF OR IN CONNECTION WITH THE USE OR PERFORMANCE OF THIS * SOFTWARE. */ /* * Portions Copyright (c) 1996-1999 by Internet Software Consortium. * * Permission to use, copy, modify, and distribute this software for any * purpose with or without fee is hereby granted, provided that the above * copyright notice and this permission notice appear in all copies. * * THE SOFTWARE IS PROVIDED "AS IS" AND INTERNET SOFTWARE CONSORTIUM DISCLAIMS * ALL WARRANTIES WITH REGARD TO THIS SOFTWARE INCLUDING ALL IMPLIED WARRANTIES * OF MERCHANTABILITY AND FITNESS. IN NO EVENT SHALL INTERNET SOFTWARE * CONSORTIUM BE LIABLE FOR ANY SPECIAL, DIRECT, INDIRECT, OR CONSEQUENTIAL * DAMAGES OR ANY DAMAGES WHATSOEVER RESULTING FROM LOSS OF USE, DATA OR * PROFITS, WHETHER IN AN ACTION OF CONTRACT, NEGLIGENCE OR OTHER TORTIOUS * ACTION, ARISING OUT OF OR IN CONNECTION WITH THE USE OR PERFORMANCE OF THIS * SOFTWARE. */
uwsgi	LINKING EXCEPTION In addition to the permissions in the GNU General Public License, the authors give you unlimited permission to link the compiled

version of this library into combinations with other programs,
and to distribute those combinations without any restriction
coming from the use of this file. (The General Public License
restrictions do apply in other respects; for example, they cover
modification of the file, and distribution when not linked into
a combined executable.)

GNU GENERAL PUBLIC LICENSE
Version 2, June 1991

Copyright (C) 1989, 1991 Free Software Foundation, Inc.,
51 Franklin Street, Fifth Floor, Boston, MA 02110-1301 USA
Everyone is permitted to copy and distribute verbatim copies of this license document, but changing it is not allowed.

See full license text on page 4-25.

(C) Copyright 2002-2006
Wolfgang Denk, DENX Software Engineering, wd@denx.de.
#
See file CREDITS for list of people who contributed to this
project.
#
This program is free software; you can redistribute it and/or
modify it under the terms of the GNU General Public License as
published by the Free Software Foundation; either version 2 of
the License, or (at your option) any later version.
#
This program is distributed in the hope that it will be useful,
but WITHOUT ANY WARRANTY; without even the implied warranty of
MERCHANTABILITY or FITNESS FOR A PARTICULAR PURPOSE. See the
GNU General Public License for more details.
#
You should have received a copy of the GNU General Public License
along with this program; if not, write to the Free Software
Foundation, Inc., 59 Temple Place, Suite 330, Boston,
MA 02111-1307 USA
#

PPPd and PPPoE

Copyright to Michal Ostrowski for PPPoE and Paul Mackerras paulus@samba.org

PPPoE

The PPPoE plugin included in this package is a component of the

Roaring Penguin PPPoE package, included in this package courtesy of

Roaring Penguin Software. (http://www.roaringpenguin.com).

PPPd

Copyrights:

****

All of the code can be freely used and redistributed. The individual

source files each have their own copyright and permission notice.

Pppd, pppstats and pppdump are under BSD-style notices. Some of the

pppd plugins are GPL'd. Chat is public domain.

Distribution:

****

The primary site for releases of this software is:

ftp://ftp.samba.org/pub/ppp/

($Id: README,v 1.37 2006/05/29 23:51:29 paulus Exp $)

James Carlson <carlson@workingcode.com> for PPPd

See full license text on page 4-25.

```
# (C) Copyright 2002-2006
# Wolfgang Denk, DENX Software Engineering, wd@denx.de.
#
# See file CREDITS for list of people who contributed to this
# project.
#
# This program is free software; you can redistribute it and/or
# modify it under the terms of the GNU General Public License as
# published by the Free Software Foundation; either version 2 of
# the License, or (at your option) any later version.
#
```

	# This program is distributed in the hope that it will be useful, # but WITHOUT ANY WARRANTY; without even the implied warranty of # MERCHANTABILITY or FITNESS FOR A PARTICULAR PURPOSE. See the # GNU General Public License for more details. # # You should have received a copy of the GNU General Public License # along with this program; if not, write to the Free Software # Foundation, Inc., 59 Temple Place, Suite 330, Boston, # MA 02111-1307 USA #
uci	Copyright (C) 2008-2010 OpenWrt.org Copyright (C) 2008 Felix Fietkau nbd@openwrt.org Copyright (C) 2006 Fokus Fraunhofer <carsten.tittel@fokus.fraunhofer.de /* * libuci - Library for the Unified Configuration Interface * Copyright (C) 2008 Felix Fietkau <nbd@openwrt.org> * * This program is free software; you can redistribute it and/or modify * it under the terms of the GNU Lesser General Public License version 2.1 * as published by the Free Software Foundation * * This program is distributed in the hope that it will be useful, * but WITHOUT ANY WARRANTY; without even the implied warranty of * MERCHANTABILITY or FITNESS FOR A PARTICULAR PURPOSE. See the * GNU General Public License for more details. */ /* * ucimap-example - sample code for the ucimap library * Copyright (C) 2008-2009 Felix Fietkau <nbd@openwrt.org> * * This program is free software; you can redistribute it and/or modify * it under the terms of the GNU General Public License version 2 * as published by the Free Software Foundation * * This program is distributed in the hope that it will be useful, * but WITHOUT ANY WARRANTY; without even the implied warranty of * MERCHANTABILITY or FITNESS FOR A PARTICULAR PURPOSE. See the * GNU General Public License for more details. */ See full license text on page 4-47. # (C) Copyright 2002-2006 # Wolfgang Denk, DENX Software Engineering, wd@denx.de. # # See file CREDITS for list of people who contributed to this # project.

	# # This program is free software; you can redistribute it and/or # modify it under the terms of the GNU General Public License as # published by the Free Software Foundation; either version 2 of # the License, or (at your option) any later version. # # This program is distributed in the hope that it will be useful, # but WITHOUT ANY WARRANTY; without even the implied warranty of # MERCHANTABILITY or FITNESS FOR A PARTICULAR PURPOSE. See the # GNU General Public License for more details. # # You should have received a copy of the GNU General Public License # along with this program; if not, write to the Free Software # Foundation, Inc., 59 Temple Place, Suite 330, Boston, # MA 02111-1307 USA #
udevtigger	Copyright (C) 2003 Greg Kroah-Hartman <greg@kroah.com> Copyright (C) 2005-2006 Kay Sievers <kay.sievers@vrfy.org> Copyright (C) 2004 Daniel Walsh Copyright (C) 2004 Ling, Xiaofeng <xiaofeng.ling@intel.com> Copyright (C) 2006 Hannes Reinecke hare@suse.de /* * Copyright (C) 2005-2006 Kay Sievers <kay.sievers@vrfy.org> * * This program is free software; you can redistribute it and/or modify it * under the terms of the GNU General Public License as published by the * Free Software Foundation version 2 of the License. * * This program is distributed in the hope that it will be useful, but * WITHOUT ANY WARRANTY; without even the implied warranty of * MERCHANTABILITY or FITNESS FOR A PARTICULAR PURPOSE. See the GNU * General Public License for more details. * * You should have received a copy of the GNU General Public License along * with this program; if not, write to the Free Software Foundation, Inc., * 51 Franklin Street, Fifth Floor, Boston, MA 02110-1301, USA. * */ See full license text on page 4-25. # (C) Copyright 2002-2006 # Wolfgang Denk, DENX Software Engineering, wd@denx.de. # # See file CREDITS for list of people who contributed to this # project. #

	# This program is free software; you can redistribute it and/or # modify it under the terms of the GNU General Public License as # published by the Free Software Foundation; either version 2 of # the License, or (at your option) any later version. # # This program is distributed in the hope that it will be useful, # but WITHOUT ANY WARRANTY; without even the implied warranty of # MERCHANTABILITY or FITNESS FOR A PARTICULAR PURPOSE. See the # GNU General Public License for more details. # # You should have received a copy of the GNU General Public License # along with this program; if not, write to the Free Software # Foundation, Inc., 59 Temple Place, Suite 330, Boston, # MA 02111-1307 USA #
uhttpd	Apache License, Version 2.0 /* * uhttpd - Tiny single-threaded httpd - Main component * * Copyright (C) 2010 Jo-Philipp Wich <xm@subsignal.org> * * Licensed under the Apache License, Version 2.0 (the "License"); * you may not use this file except in compliance with the License. * You may obtain a copy of the License at * * http://www.apache.org/licenses/LICENSE-2.0 * * Unless required by applicable law or agreed to in writing, software * distributed under the License is distributed on an "AS IS" BASIS, * WITHOUT WARRANTIES OR CONDITIONS OF ANY KIND, either express or implied. * See the License for the specific language governing permissions and * limitations under the License. */ # (C) Copyright 2002-2006 # Wolfgang Denk, DENX Software Engineering, wd@denx.de. # # See file CREDITS for list of people who contributed to this # project. # # This program is free software; you can redistribute it and/or # modify it under the terms of the GNU General Public License as # published by the Free Software Foundation; either version 2 of

	# the License, or (at your option) any later version. # # This program is distributed in the hope that it will be useful, # but WITHOUT ANY WARRANTY; without even the implied warranty of # MERCHANTABILITY or FITNESS FOR A PARTICULAR PURPOSE. See the # GNU General Public License for more details. # # You should have received a copy of the GNU General Public License # along with this program; if not, write to the Free Software # Foundation, Inc., 59 Temple Place, Suite 330, Boston, # MA 02111-1307 USA #
wget v 1.10.2	Copyright (C) 1995, 1996, 1997, 1998, 2003 Free Software Foundation, Inc. # # Copyright (C) 2006-2012 OpenWrt.org # # This is free software, licensed under the GNU General Public License v2. # See /LICENSE for more information. # Copyright (c) 2004, Jan Kneschke, incremental All rights reserved. Redistribution and use in source and binary forms, with or without modification, are permitted provided that the following conditions are met: - Redistributions of source code must retain the above copyright notice, this list of conditions and the following disclaimer. - Redistributions in binary form must reproduce the above copyright notice, this list of conditions and the following disclaimer in the documentation and/or other materials provided with the distribution. - Neither the name of the 'incremental' nor the names of its contributors may

be used to endorse or promote products derived from this software without

specific prior written permission.

THIS SOFTWARE IS PROVIDED BY THE COPYRIGHT HOLDERS AND CONTRIBUTORS "AS IS"

AND ANY EXPRESS OR IMPLIED WARRANTIES, INCLUDING, BUT NOT LIMITED TO, THE

IMPLIED WARRANTIES OF MERCHANTABILITY AND FITNESS FOR A PARTICULAR PURPOSE

ARE DISCLAIMED. IN NO EVENT SHALL THE COPYRIGHT OWNER OR CONTRIBUTORS BE

LIABLE FOR ANY DIRECT, INDIRECT, INCIDENTAL, SPECIAL, EXEMPLARY, OR

CONSEQUENTIAL DAMAGES (INCLUDING, BUT NOT LIMITED TO, PROCUREMENT OF

SUBSTITUTE GOODS OR SERVICES; LOSS OF USE, DATA, OR PROFITS; OR BUSINESS

INTERRUPTION) HOWEVER CAUSED AND ON ANY THEORY OF LIABILITY, WHETHER IN

CONTRACT, STRICT LIABILITY, OR TORT (INCLUDING NEGLIGENCE OR OTHERWISE)

ARISING IN ANY WAY OUT OF THE USE OF THIS SOFTWARE, EVEN IF ADVISED OF

THE POSSIBILITY OF SUCH DAMAGE.

(C) Copyright 2002-2006
Wolfgang Denk, DENX Software Engineering, wd@denx.de.
#
See file CREDITS for list of people who contributed to this
project.
#
This program is free software; you can redistribute it and/or
modify it under the terms of the GNU General Public License as
published by the Free Software Foundation; either version 2 of
the License, or (at your option) any later version.
#
This program is distributed in the hope that it will be useful,
but WITHOUT ANY WARRANTY; without even the implied warranty of
MERCHANTABILITY or FITNESS FOR A PARTICULAR PURPOSE. See the
GNU General Public License for more details.
#

	# You should have received a copy of the GNU General Public License # along with this program; if not, write to the Free Software # Foundation, Inc., 59 Temple Place, Suite 330, Boston, # MA 02111-1307 USA #
Wireless-tools	Copyright (c) 1997-2007 Jean Tourrilhes <jt@hpl.hp.com> (Ref: wireless_tools.29/COPYING) GNU GENERAL PUBLIC LICENSE Version 2, June 1991 Copyright (C) 1989, 1991 Free Software Foundation, Inc. 59 Temple Place, Suite 330, Boston, MA 02111-1307 USA Everyone is permitted to copy and distribute verbatim copies of this license document, but changing it is not allowed. See full license text on page 4-25. # (C) Copyright 2002-2006 # Wolfgang Denk, DENX Software Engineering, wd@denx.de. # # See file CREDITS for list of people who contributed to this # project. # # This program is free software; you can redistribute it and/or # modify it under the terms of the GNU General Public License as # published by the Free Software Foundation; either version 2 of # the License, or (at your option) any later version. # # This program is distributed in the hope that it will be useful, # but WITHOUT ANY WARRANTY; without even the implied warranty of # MERCHANTABILITY or FITNESS FOR A PARTICULAR PURPOSE. See the # GNU General Public License for more details. # # You should have received a copy of the GNU General Public License # along with this program; if not, write to the Free Software # Foundation, Inc., 59 Temple Place, Suite 330, Boston, # MA 02111-1307 USA #

zlib

(C) 1995-2004 Jean-loup Gailly and Mark Adler
jloup@gzip.org madler@alumni.caltech.edu

This software is provided 'as-is', without any express or implied
warranty. In no event will the authors be held liable for any damages
arising from the use of this software.

Permission is granted to anyone to use this software for any purpose,
including commercial applications, and to alter it and redistribute it
freely, subject to the following restrictions:

1. The origin of this software must not be misrepresented; you must not
   claim that you wrote the original software. If you use this software
   in a product, an acknowledgment in the product documentation would be
   appreciated but is not required.
2. Altered source versions must be plainly marked as such, and must not be
   misrepresented as being the original software.
3. This notice may not be removed or altered from any source distribution.

Jean-loup Gailly Mark Adler
jloup@gzip.org madler@alumni.caltech.edu

(C) Copyright 2002-2006
Wolfgang Denk, DENX Software Engineering, wd@denx.de.
#
See file CREDITS for list of people who contributed to this
project.
#
This program is free software; you can redistribute it and/or
modify it under the terms of the GNU General Public License as
published by the Free Software Foundation; either version 2 of
the License, or (at your option) any later version.
#
This program is distributed in the hope that it will be useful,
but WITHOUT ANY WARRANTY; without even the implied warranty of
MERCHANTABILITY or FITNESS FOR A PARTICULAR PURPOSE. See the
GNU General Public License for more details.
#
You should have received a copy of the GNU General Public License
along with this program; if not, write to the Free Software
Foundation, Inc., 59 Temple Place, Suite 330, Boston,
MA 02111-1307 USA
#

lighttpd

#
Copyright (C) 2006-2012 OpenWrt.org
#
This is free software, licensed under the GNU General Public License v2.
See /LICENSE for more information.
#

See full license text on page 4-25.

Copyright (c) 2004, Jan Kneschke, incremental
All rights reserved.

Redistribution and use in source and binary forms, with or without modification, are permitted provided that the following conditions are met:

- Redistributions of source code must retain the above copyright notice, this list of conditions and the following disclaimer.

- Redistributions in binary form must reproduce the above copyright notice, this list of conditions and the following disclaimer in the documentation and/or other materials provided with the distribution.

- Neither the name of the 'incremental' nor the names of its contributors may be used to endorse or promote products derived from this software without specific prior written permission.

THIS SOFTWARE IS PROVIDED BY THE COPYRIGHT HOLDERS AND CONTRIBUTORS "AS IS" AND ANY EXPRESS OR IMPLIED WARRANTIES, INCLUDING, BUT NOT LIMITED TO, THE IMPLIED WARRANTIES OF MERCHANTABILITY AND FITNESS FOR A PARTICULAR PURPOSE ARE DISCLAIMED. IN NO EVENT SHALL THE COPYRIGHT OWNER OR CONTRIBUTORS BE LIABLE FOR ANY DIRECT, INDIRECT, INCIDENTAL, SPECIAL, EXEMPLARY, OR CONSEQUENTIAL DAMAGES (INCLUDING, BUT NOT LIMITED TO, PROCUREMENT OF SUBSTITUTE GOODS OR SERVICES; LOSS OF USE, DATA, OR PROFITS; OR BUSINESS INTERRUPTION) HOWEVER CAUSED AND ON ANY THEORY OF LIABILITY, WHETHER IN CONTRACT, STRICT LIABILITY, OR TORT (INCLUDING NEGLIGENCE OR OTHERWISE) ARISING IN ANY WAY OUT OF THE USE OF THIS SOFTWARE, EVEN IF ADVISED OF THE POSSIBILITY OF SUCH DAMAGE.

(C) Copyright 2002-2006
Wolfgang Denk, DENX Software Engineering, wd@denx.de.
#
See file CREDITS for list of people who contributed to this
project.
#
This program is free software; you can redistribute it and/or
modify it under the terms of the GNU General Public License as
published by the Free Software Foundation; either version 2 of

	# the License, or (at your option) any later version. # # This program is distributed in the hope that it will be useful, # but WITHOUT ANY WARRANTY; without even the implied warranty of # MERCHANTABILITY or FITNESS FOR A PARTICULAR PURPOSE. See the # GNU General Public License for more details. # # You should have received a copy of the GNU General Public License # along with this program; if not, write to the Free Software # Foundation, Inc., 59 Temple Place, Suite 330, Boston, # MA 02111-1307 USA #
klish	Copyright (c) 2005, 3Com Corporation Copyright (c) 2005,2006, Newport Networks Ltd Copyright (c) 2010 Serj Kalichev ========== Overview This package contains code which is copyrighted to multiple sources. ========== 3Com Corporation The intial public release of this software was developed by Graeme McKerrell whilst in the employment of 3Com Europe Ltd. Copyright (c) 2005, 3Com Corporation All rights reserved. Redistribution and use in source and binary forms, with or without modification, are permitted provided that the following conditions are met: * Redistributions of source code must retain the above copyright notice, this list of conditions and the following disclaimer. * Redistributions in binary form must reproduce the above copyright notice, this list of conditions and the following disclaimer in the documentation and/or other materials provided with the distribution. * Neither the name of 3Com Corporation nor the names of its contributors may be used to endorse or promote products derived from this software without specific prior written permission. THIS SOFTWARE IS PROVIDED BY THE COPYRIGHT HOLDERS AND

CONTRIBUTORS "AS IS" AND ANY EXPRESS OR IMPLIED WARRANTIES, INCLUDING, BUT NOT LIMITED TO, THE IMPLIED WARRANTIES OF MERCHANTABILITY AND FITNESS FOR A PARTICULAR PURPOSE ARE DISCLAIMED. IN NO EVENT SHALL THE COPYRIGHT OWNER OR CONTRIBUTORS BE LIABLE FOR ANY DIRECT, INDIRECT, INCIDENTAL, SPECIAL, EXEMPLARY, OR CONSEQUENTIAL DAMAGES (INCLUDING, BUT NOT LIMITED TO, PROCUREMENT OF SUBSTITUTE GOODS OR SERVICES; LOSS OF USE, DATA, OR PROFITS; OR BUSINESS INTERRUPTION) HOWEVER CAUSED AND ON ANY THEORY OF LIABILITY, WHETHER IN CONTRACT, STRICT LIABILITY, OR TORT (INCLUDING NEGLIGENCE OR OTHERWISE) ARISING IN ANY WAY OUT OF THE USE OF THIS SOFTWARE, EVEN IF ADVISED OF THE POSSIBILITY OF SUCH DAMAGE.

==========

Newport Networks Ltd.

The 0.6-0.7 releases of this software was developed by Graeme McKerrell whilst in the employment of Newport Networks Ltd. As well as enhancing the existing code the new modules were developed.

Copyright (c) 2005,2006, Newport Networks Ltd

All rights reserved.

Redistribution and use in source and binary forms, with or without modification, are permitted provided that the following conditions are met:

* Redistributions of source code must retain the above copyright notice, this list of conditions and the following disclaimer.

* Redistributions in binary form must reproduce the above copyright notice, this list of conditions and the following disclaimer in the documentation and/or other materials provided with the distribution.

* Neither the name of Newport Networks Ltd nor the names of its contributors may be used to endorse or promote products derived from this software without specific prior written permission.

THIS SOFTWARE IS PROVIDED BY THE COPYRIGHT HOLDERS AND CONTRIBUTORS "AS IS" AND ANY EXPRESS OR IMPLIED WARRANTIES, INCLUDING, BUT NOT LIMITED TO, THE IMPLIED WARRANTIES OF MERCHANTABILITY AND FITNESS FOR A PARTICULAR PURPOSE ARE DISCLAIMED. IN NO EVENT SHALL THE COPYRIGHT OWNER OR CONTRIBUTORS BE LIABLE FOR ANY DIRECT, INDIRECT, INCIDENTAL, SPECIAL, EXEMPLARY, OR CONSEQUENTIAL DAMAGES (INCLUDING, BUT NOT LIMITED TO, PROCUREMENT OF SUBSTITUTE GOODS OR SERVICES; LOSS OF USE, DATA, OR PROFITS; OR BUSINESS INTERRUPTION) HOWEVER CAUSED AND ON ANY THEORY OF LIABILITY, WHETHER IN CONTRACT, STRICT LIABILITY, OR TORT (INCLUDING NEGLIGENCE OR OTHERWISE) ARISING IN ANY WAY OUT OF THE USE OF THIS SOFTWARE, EVEN IF ADVISED OF THE POSSIBILITY OF SUCH DAMAGE.

==========

Serj Kalichev

The klish is a fork of original clish.

Copyright (c) 2010 Serj Kalichev.

All Rights Reserved.

Redistribution and use in source and binary forms, with or without modification, are permitted provided that the following conditions are met:

1. Redistributions of source code must retain the above copyright notice, this list of conditions and the following disclaimer.

2. Redistributions in binary form must reproduce the above copyright notice, this list of conditions and the following disclaimer in the documentation and/or other materials provided with the distribution.

3. The name of the author may not be used to endorse or promote products derived from this software without specific prior written permission.

THIS SOFTWARE IS PROVIDED BY THE COPYRIGHT HOLDERS AND CONTRIBUTORS "AS IS" AND ANY EXPRESS OR IMPLIED WARRANTIES, INCLUDING, BUT NOT LIMITED TO, THE IMPLIED WARRANTIES OF MERCHANTABILITY AND FITNESS FOR A PARTICULAR PURPOSE ARE DISCLAIMED. IN NO EVENT SHALL THE COPYRIGHT OWNER OR CONTRIBUTORS BE LIABLE FOR ANY DIRECT, INDIRECT, INCIDENTAL, SPECIAL, EXEMPLARY, OR CONSEQUENTIAL DAMAGES (INCLUDING, BUT NOT LIMITED TO, PROCUREMENT OF SUBSTITUTE GOODS OR SERVICES; LOSS OF USE, DATA, OR PROFITS; OR BUSINESS INTERRUPTION) HOWEVER CAUSED AND ON ANY THEORY OF LIABILITY, WHETHER IN CONTRACT, STRICT LIABILITY, OR TORT (INCLUDING NEGLIGENCE OR OTHERWISE) ARISING IN ANY WAY OUT OF THE USE OF THIS SOFTWARE, EVEN IF ADVISED OF THE POSSIBILITY OF SUCH DAMAGE.

(C) Copyright 2002-2006
Wolfgang Denk, DENX Software Engineering, wd@denx.de.
#
See file CREDITS for list of people who contributed to this
project.
#
This program is free software; you can redistribute it and/or
modify it under the terms of the GNU General Public License as
published by the Free Software Foundation; either version 2 of
the License, or (at your option) any later version.
#
This program is distributed in the hope that it will be useful,
but WITHOUT ANY WARRANTY; without even the implied warranty of

	# MERCHANTABILITY or FITNESS FOR A PARTICULAR PURPOSE. See the # GNU General Public License for more details. # # You should have received a copy of the GNU General Public License # along with this program; if not, write to the Free Software # Foundation, Inc., 59 Temple Place, Suite 330, Boston, # MA 02111-1307 USA #
libroxml	* This is the source file for lib libroxml.so * \author blunderer <blunderer@blunderer.org> * \date 23 Dec 2008 * * Copyright (C) 2009 blunderer LGPL v2.1 See full license text on page 4-47. Copyright (C) 2010 blunderer This library is free software; you can redistribute it and/or modify it under the terms of the GNU Lesser General Public License as published by the Free Software Foundation; either version 2.1 of the License, or (at your option) any later version. The author added a static linking exception, see License.txt. This library is distributed in the hope that it will be useful, but WITHOUT ANY WARRANTY; without even the implied warranty of MERCHANTABILITY or FITNESS FOR A PARTICULAR PURPOSE. See the GNU Lesser General Public License for more details. You should have received a copy of the GNU Lesser General Public License along with this library; if not, write to the Free Software Foundation, Inc., 51 Franklin Street, Fifth Floor, Boston, MA 02110-1301 USA As a special exception to the LGPL v2.1 (below), the copyright holders of this library give you permission to statically link this library with independent modules to produce an executable, regardless of the license terms of these independent modules, and to copy and distribute the resulting executable under terms of your choice, provided that you also meet, for each linked independent module, the terms and conditions of the license of that module. The resulting executable may therefore be distributed without complying with the LGPL terms that state that recipients of your executable must be able to relink against modified versions of

the library.

It is also appreciated if you mention in the README or CREDITS the use of this library.

An independent module is a module which is not derived from or based on this library. If you modify this library, you may extend this exception to your version of the library, but you are not obligated to do so. If you do not wish to do so, delete this exception statement from your version.

(C) Copyright 2002-2006
Wolfgang Denk, DENX Software Engineering, wd@denx.de.
#
See file CREDITS for list of people who contributed to this
project.
#
This program is free software; you can redistribute it and/or
modify it under the terms of the GNU General Public License as
published by the Free Software Foundation; either version 2 of
the License, or (at your option) any later version.
#
This program is distributed in the hope that it will be useful,
but WITHOUT ANY WARRANTY; without even the implied warranty of
MERCHANTABILITY or FITNESS FOR A PARTICULAR PURPOSE. See the
GNU General Public License for more details.
#
You should have received a copy of the GNU General Public License
along with this program; if not, write to the Free Software
Foundation, Inc., 59 Temple Place, Suite 330, Boston,
MA 02111-1307 USA
#

conntrack-tools

```
/*
* (C) 2006-2007 by Pablo Neira Ayuso <pablo@netfilter.org>
*
* This program is free software; you can redistribute it and/or modify
* it under the terms of the GNU General Public License as published by
* the Free Software Foundation; either version 2 of the License, or
* (at your option) any later version.
*
* This program is distributed in the hope that it will be useful,
* but WITHOUT ANY WARRANTY; without even the implied warranty of
* MERCHANTABILITY or FITNESS FOR A PARTICULAR PURPOSE.  See the
* GNU General Public License for more details.
*
* You should have received a copy of the GNU General Public License
* along with this program; if not, write to the Free Software
* Foundation, Inc., 675 Mass Ave, Cambridge, MA 02139, USA.
*/


/*
  Red Black Trees
  (C) 1999  Andrea Arcangeli <andrea@suse.de>
  (C) 2002  David Woodhouse <dwmw2@infradead.org>

  This program is free software; you can redistribute it and/or modify
  it under the terms of the GNU General Public License as published by
  the Free Software Foundation; either version 2 of the License, or
  (at your option) any later version.

  This program is distributed in the hope that it will be useful,
  but WITHOUT ANY WARRANTY; without even the implied warranty of
```

	MERCHANTABILITY or FITNESS FOR A PARTICULAR PURPOSE. See the GNU General Public License for more details. You should have received a copy of the GNU General Public License along with this program; if not, write to the Free Software Foundation, Inc., 59 Temple Place, Suite 330, Boston, MA 02111-1307 USA linux/lib/rbtree.c */ GPLv2 See full license text on page 4-25. # (C) Copyright 2002-2006 # Wolfgang Denk, DENX Software Engineering, wd@denx.de. # # See file CREDITS for list of people who contributed to this # project. # # This program is free software; you can redistribute it and/or # modify it under the terms of the GNU General Public License as # published by the Free Software Foundation; either version 2 of # the License, or (at your option) any later version. # # This program is distributed in the hope that it will be useful, # but WITHOUT ANY WARRANTY; without even the implied warranty of # MERCHANTABILITY or FITNESS FOR A PARTICULAR PURPOSE. See the # GNU General Public License for more details. # # You should have received a copy of the GNU General Public License # along with this program; if not, write to the Free Software # Foundation, Inc., 59 Temple Place, Suite 330, Boston, # MA 02111-1307 USA #
libmnl	/* * (C) 2008-2012 by Pablo Neira Ayuso <pablo@netfilter.org> * * This program is free software; you can redistribute it and/or modify

	* it under the terms of the GNU Lesser General Public License as published * by the Free Software Foundation; either version 2.1 of the License, or * (at your option) any later version. */ LGPL v2.1 See full license text on page 4-47. # (C) Copyright 2002-2006 # Wolfgang Denk, DENX Software Engineering, wd@denx.de. # # See file CREDITS for list of people who contributed to this # project. # # This program is free software; you can redistribute it and/or # modify it under the terms of the GNU General Public License as # published by the Free Software Foundation; either version 2 of # the License, or (at your option) any later version. # # This program is distributed in the hope that it will be useful, # but WITHOUT ANY WARRANTY; without even the implied warranty of # MERCHANTABILITY or FITNESS FOR A PARTICULAR PURPOSE. See the # GNU General Public License for more details. # # You should have received a copy of the GNU General Public License # along with this program; if not, write to the Free Software # Foundation, Inc., 59 Temple Place, Suite 330, Boston, # MA 02111-1307 USA #
libnetfilter_conntrack	/* * (C) 2005-2011 by Pablo Neira Ayuso <pablo@netfilter.org> * * This program is free software; you can redistribute it and/or modify it * under the terms of the GNU General Public License as published by * the Free Software Foundation; either version 2 of the License, or * (at your option) any later version. */

```
/*
 * (C) 2005-2011 by Pablo Neira Ayuso <pablo@netfilter.org>
 *               Harald Welte <laforge@netfilter.org>
 *
 * This program is free software; you can redistribute it and/or modify it
 * under the terms of the GNU General Public License as published by
 * the Free Software Foundation; either version 2 of the License, or
 * (at your option) any later version.
 */
```

GPLv2

See full license text on page 4-25.

```
# (C) Copyright 2002-2006
# Wolfgang Denk, DENX Software Engineering, wd@denx.de.
#
# See file CREDITS for list of people who contributed to this
# project.
#
# This program is free software; you can redistribute it and/or
# modify it under the terms of the GNU General Public License as
# published by the Free Software Foundation; either version 2 of
# the License, or (at your option) any later version.
#
# This program is distributed in the hope that it will be useful,
# but WITHOUT ANY WARRANTY; without even the implied warranty of
# MERCHANTABILITY or FITNESS FOR A PARTICULAR PURPOSE. See the
# GNU General Public License for more details.
#
# You should have received a copy of the GNU General Public License
# along with this program; if not, write to the Free Software
# Foundation, Inc., 59 Temple Place, Suite 330, Boston,
# MA 02111-1307 USA
#
```

libnfnetlink

```
/* iftable - table of network interfaces
 *
 * (C) 2004 by Astaro AG, written by Harald Welte <hwelte@astaro.com>
 * (C) 2008 by Pablo Neira Ayuso <pablo@netfilter.org>
 *
 * This software is Free Software and licensed under GNU GPLv2+.
 */

/* libnfnetlink.c: generic library for communication with netfilter
 *
 * (C) 2002-2006 by Harald Welte <laforge@gnumonks.org>
 * (C) 2006-2011 by Pablo Neira Ayuso <pablo@netfilter.org>
 *
 * Based on some original ideas from Jay Schulist <jschlst@samba.org>
 *
 * Development of this code funded by Astaro AG (http://www.astaro.com)
 *
 * This program is free software; you can redistribute it and/or modify it
 * under the terms of the GNU General Public License version 2 as published
 * by the Free Software Foundation.
 *
 * 2005-09-14 Pablo Neira Ayuso <pablo@netfilter.org>:
 *  Define structure nfnlhdr
 *  Added __be64_to_cpu function
 * Use NFA_TYPE macro to get the attribute type
 *
 * 2006-01-14 Harald Welte <laforge@netfilter.org>:
 *  introduce nfnl_subsys_handle
 *
 * 2006-01-15 Pablo Neira Ayuso <pablo@netfilter.org>:
```

```
 *  set missing subsys_id in nfnl_subsys_open
 *  set missing nfnlh->local.nl_pid in nfnl_open
 *
 * 2006-01-26 Harald Welte <laforge@netfilter.org>:
 *  remove bogus nfnlh->local.nl_pid from nfnl_open ;)
 *  add 16bit attribute functions
 *
 * 2006-07-03 Pablo Neira Ayuso <pablo@netfilter.org>:
 *  add iterator API
 *  add replacements for nfnl_listen and nfnl_talk
 *  fix error handling
 *  add assertions
 *  add documentation
 *  minor cleanups
 */

/* rtnl - rtnetlink utility functions
 *
 * (C) 2004 by Astaro AG, written by Harald Welte <hwelte@astaro.com>
 *
 * Adapted to nfnetlink by Eric Leblond <eric@inl.fr>
 *
 * This software is free software and licensed under GNU GPLv2+.
 *
 */
```

GPLv2

See full license text on page 4-25.

```
# (C) Copyright 2002-2006
# Wolfgang Denk, DENX Software Engineering, wd@denx.de.
#
```

	# See file CREDITS for list of people who contributed to this # project. # # This program is free software; you can redistribute it and/or # modify it under the terms of the GNU General Public License as # published by the Free Software Foundation; either version 2 of # the License, or (at your option) any later version. # # This program is distributed in the hope that it will be useful, # but WITHOUT ANY WARRANTY; without even the implied warranty of # MERCHANTABILITY or FITNESS FOR A PARTICULAR PURPOSE. See the # GNU General Public License for more details. # # You should have received a copy of the GNU General Public License # along with this program; if not, write to the Free Software # Foundation, Inc., 59 Temple Place, Suite 330, Boston, # MA 02111-1307 USA #
lua-cjson	Copyright (c) 2010-2012 Mark Pulford <mark@kyne.com.au> Permission is hereby granted, free of charge, to any person obtaining a copy of this software and associated documentation files (the "Software"), to deal in the Software without restriction, including without limitation the rights to use, copy, modify, merge, publish, distribute, sublicense, and/or sell copies of the Software, and to permit persons to whom the Software is furnished to do so, subject to the following conditions: The above copyright notice and this permission notice shall be included in all copies or substantial portions of the Software. THE SOFTWARE IS PROVIDED "AS IS", WITHOUT WARRANTY OF ANY KIND, EXPRESS OR IMPLIED, INCLUDING BUT NOT LIMITED TO THE WARRANTIES OF MERCHANTABILITY, FITNESS FOR A PARTICULAR PURPOSE AND NONINFRINGEMENT. IN NO EVENT SHALL THE AUTHORS OR COPYRIGHT HOLDERS BE LIABLE FOR ANY CLAIM, DAMAGES OR OTHER LIABILITY, WHETHER IN AN ACTION OF CONTRACT, TORT OR OTHERWISE, ARISING FROM, OUT OF OR IN CONNECTION WITH THE SOFTWARE OR THE USE OR OTHER DEALINGS IN THE SOFTWARE. /********** * * The author of this software is David M. Gay. * * Copyright (c) 1991, 2000, 2001 by Lucent Technologies.

```
 *

 * Permission to use, copy, modify, and distribute this software for any

 * purpose without fee is hereby granted, provided that this entire notice

 * is included in all copies of any software which is or includes a copy

 * or modification of this software and in all copies of the supporting

 * documentation for such software.

 *

 * THIS SOFTWARE IS BEING PROVIDED "AS IS", WITHOUT ANY EXPRESS OR IMPLIED

 * WARRANTY.  IN PARTICULAR, NEITHER THE AUTHOR NOR LUCENT MAKES ANY

 * REPRESENTATION OR WARRANTY OF ANY KIND CONCERNING THE MERCHANTABILITY

 * OF THIS SOFTWARE OR ITS FITNESS FOR ANY PARTICULAR PURPOSE.

 *

 ***************************************************************/
```

The MIT License (MIT)

Permission is hereby granted, free of charge, to any person obtaining a copy of this software and associated documentation files (the "Software"), to deal in the Software without restriction, including without limitation the rights to use, copy, modify, merge, publish, distribute, sublicense, and/or sell copies of the Software, and to permit persons to whom the Software is furnished to do so, subject to the following conditions:

The above copyright notice and this permission notice shall be included in all copies or substantial portions of the Software.

THE SOFTWARE IS PROVIDED "AS IS", WITHOUT WARRANTY OF ANY KIND, EXPRESS OR IMPLIED, INCLUDING BUT NOT LIMITED TO THE WARRANTIES OF MERCHANTABILITY, FITNESS FOR A PARTICULAR PURPOSE AND NONINFRINGEMENT. IN NO EVENT SHALL THE AUTHORS OR COPYRIGHT HOLDERS BE LIABLE FOR ANY CLAIM, DAMAGES OR OTHER LIABILITY, WHETHER IN AN ACTION OF CONTRACT, TORT OR OTHERWISE, ARISING FROM, OUT OF OR IN CONNECTION WITH THE SOFTWARE OR THE USE OR OTHER DEALINGS IN THE SOFTWARE.

```
# (C) Copyright 2002-2006
# Wolfgang Denk, DENX Software Engineering, wd@denx.de.
#
```

	# See file CREDITS for list of people who contributed to this # project. # # This program is free software; you can redistribute it and/or # modify it under the terms of the GNU General Public License as # published by the Free Software Foundation; either version 2 of # the License, or (at your option) any later version. # # This program is distributed in the hope that it will be useful, # but WITHOUT ANY WARRANTY; without even the implied warranty of # MERCHANTABILITY or FITNESS FOR A PARTICULAR PURPOSE. See the # GNU General Public License for more details. # # You should have received a copy of the GNU General Public License # along with this program; if not, write to the Free Software # Foundation, Inc., 59 Temple Place, Suite 330, Boston, # MA 02111-1307 USA #
libubox	GPLv2 See full license text on page 4-25. Copyright (C) 2010-2016 Felix Fietkau <nbd@openwrt.org> Permission to use, copy, modify, and/or distribute this software for any purpose with or without fee is hereby granted, provided that the above copyright notice and this permission notice appear in all copies. THE SOFTWARE IS PROVIDED "AS IS" AND THE AUTHOR DISCLAIMS ALL WARRANTIES WITH REGARD TO THIS SOFTWARE INCLUDING ALL IMPLIED WARRANTIES OF MERCHANTABILITY AND FITNESS. IN NO EVENT SHALL THE AUTHOR BE LIABLE FOR ANY SPECIAL, DIRECT, INDIRECT, OR CONSEQUENTIAL DAMAGES OR ANY DAMAGES WHATSOEVER RESULTING FROM LOSS OF USE, DATA OR PROFITS, WHETHER IN AN ACTION OF CONTRACT, NEGLIGENCE OR OTHER TORTIOUS ACTION, ARISING OUT OF OR IN CONNECTION WITH THE USE OR PERFORMANCE OF THIS SOFTWARE. # (C) Copyright 2002-2006 # Wolfgang Denk, DENX Software Engineering, wd@denx.de. # # See file CREDITS for list of people who contributed to this # project. # # This program is free software; you can redistribute it and/or # modify it under the terms of the GNU General Public License as # published by the Free Software Foundation; either version 2 of # the License, or (at your option) any later version. # # This program is distributed in the hope that it will be useful,

	# but WITHOUT ANY WARRANTY; without even the implied warranty of # MERCHANTABILITY or FITNESS FOR A PARTICULAR PURPOSE. See the # GNU General Public License for more details. # # You should have received a copy of the GNU General Public License # along with this program; if not, write to the Free Software # Foundation, Inc., 59 Temple Place, Suite 330, Boston, # MA 02111-1307 USA #
MAC-telnet	GPLv2 See full license text on page 4-25. Mac-Telnet - Connect to RouterOS or mactelnetd devices via MAC address Copyright (C) 2010, Håkon Nessjøen <haakon.nessjoen@gmail.com> This program is free software; you can redistribute it and/or modify it under the terms of the GNU General Public License as published by the Free Software Foundation; either version 2 of the License, or (at your option) any later version. This program is distributed in the hope that it will be useful, but WITHOUT ANY WARRANTY; without even the implied warranty of MERCHANTABILITY or FITNESS FOR A PARTICULAR PURPOSE. See the GNU General Public License for more details. You should have received a copy of the GNU General Public License along with this program; if not, write to the Free Software Foundation, Inc., 51 Franklin Street, Fifth Floor, Boston, MA 02110-1301 USA. # (C) Copyright 2002-2006 # Wolfgang Denk, DENX Software Engineering, wd@denx.de. # # See file CREDITS for list of people who contributed to this # project. # # This program is free software; you can redistribute it and/or # modify it under the terms of the GNU General Public License as # published by the Free Software Foundation; either version 2 of # the License, or (at your option) any later version. # # This program is distributed in the hope that it will be useful, # but WITHOUT ANY WARRANTY; without even the implied warranty of # MERCHANTABILITY or FITNESS FOR A PARTICULAR PURPOSE. See the # GNU General Public License for more details. # # You should have received a copy of the GNU General Public License

	# along with this program; if not, write to the Free Software # Foundation, Inc., 59 Temple Place, Suite 330, Boston, # MA 02111-1307 USA #
ARP-NAT	## # Client bridge hotplug script (/etc/hotplug.d/net/20-client_bridge) # Copyright Eric Bishop, 2009 eric@gargoyle-router.com # Created for Gargoyle, www.gargoyle-router.com # #This is free software licensed under the terms of the GNU GPL v2.0 # # You must have the arpnat ebtables module for this to work ## /* * ebt_arpnat * * Authors: * Kestutis Barkauskas <gpl@wilibox.com> * * November, 2005 * * Rewritten by: * Kestutis Barkauskas and Kestutis Kupciunas <gpl@ubnt.com> * * June, 2010 * * Updated to work with more recent kernel versions (e.g., 2.6.30) * Ditched entry expiration in favor of wiping entries with duplicate ips, when situation arises * Fixed arpnat procfs (though both arpnat_cache and arpnat_info are both in root procfs directory now) * * Eric Bishop <eric@gargoyle-router.com> * * ebt_arpnat * * Authors: * Kestutis Barkauskas <gpl@wilibox.com> * * November, 2005 * * Rewritten by: * Kestutis Barkauskas and Kestutis Kupciunas <gpl@ubnt.com> *

	* June, 2010 * * Updated to work with more recent kernel versions (e.g., 2.6.30) * Ditched entry expiration in favor of wiping entries with duplicate ips, when situation arises * Fixed arpnat procfs (though both arpnat_cache and arpnat_info are both in root procfs directory now) * * Eric Bishop <eric@gargoyle-router.com> */ GPLv2 See full license text on page 4-25. # (C) Copyright 2002-2006 # Wolfgang Denk, DENX Software Engineering, wd@denx.de. # # See file CREDITS for list of people who contributed to this # project. # # This program is free software; you can redistribute it and/or # modify it under the terms of the GNU General Public License as # published by the Free Software Foundation; either version 2 of # the License, or (at your option) any later version. # # This program is distributed in the hope that it will be useful, # but WITHOUT ANY WARRANTY; without even the implied warranty of # MERCHANTABILITY or FITNESS FOR A PARTICULAR PURPOSE. See the # GNU General Public License for more details. # # You should have received a copy of the GNU General Public License # along with this program; if not, write to the Free Software # Foundation, Inc., 59 Temple Place, Suite 330, Boston, # MA 02111-1307 USA #
odhcp6c	/** * Copyright (C) 2012-2014 Steven Barth steven@midlink.org> * * This program is free software; you can redistribute it and/or modify * it under the terms of the GNU General Public License v2 as published by * the Free Software Foundation. * * This program is distributed in the hope that it will be useful, * but WITHOUT ANY WARRANTY; without even the implied warranty of * MERCHANTABILITY or FITNESS FOR A PARTICULAR PURPOSE. See the

	* GNU General Public License for more details. * */
memtester	GPLv2 See full license text on page 4-25. /* * memtester version 4 * * Very simple but very effective user-space memory tester. * Originally by Simon Kirby <sim@stormix.com> <sim@neato.org> * Version 2 by Charles Cazabon <charlesc-memtester@pyropus.ca> * Version 3 not publicly released. * Version 4 rewrite: * Copyright (C) 2004-2010 Charles Cazabon <charlesc-memtester@pyropus.ca> * Licensed under the terms of the GNU General Public License version 2 (only). * See the file COPYING for details. * */
libpam	Unless otherwise *explicitly* stated the following text describes the licensed conditions under which the contents of this Linux-PAM release may be distributed: ---------- Redistribution and use in source and binary forms of Linux-PAM, with or without modification, are permitted provided that the following conditions are met: 1. Redistributions of source code must retain any existing copyright notice, and this entire permission notice in its entirety, including the disclaimer of warranties. 2. Redistributions in binary form must reproduce all prior and current copyright notices, this list of conditions, and the following disclaimer in the documentation and/or other materials provided with the distribution. 3. The name of any author may not be used to endorse or promote products derived from this software without their specific prior written permission. ALTERNATIVELY, this product may be distributed under the terms of the GNU General Public License, in which case the provisions of the GNU GPL are required INSTEAD OF the above restrictions. (This clause is necessary due to a potential conflict between the GNU GPL and the restrictions contained in a BSD-style copyright.) THIS SOFTWARE IS PROVIDED ``AS IS'' AND ANY EXPRESS OR IMPLIED WARRANTIES, INCLUDING, BUT NOT LIMITED TO, THE IMPLIED WARRANTIES OF MERCHANTABILITY AND FITNESS FOR A PARTICULAR PURPOSE ARE DISCLAIMED. IN NO EVENT SHALL THE AUTHOR(S) BE LIABLE FOR ANY DIRECT, INDIRECT, INCIDENTAL, SPECIAL, EXEMPLARY, OR CONSEQUENTIAL DAMAGES (INCLUDING, BUT NOT LIMITED TO, PROCUREMENT OF SUBSTITUTE GOODS OR SERVICES; LOSS OF USE, DATA, OR PROFITS; OR BUSINESS INTERRUPTION)

	HOWEVER CAUSED AND ON ANY THEORY OF LIABILITY, WHETHER IN CONTRACT, STRICT LIABILITY, OR TORT (INCLUDING NEGLIGENCE OR OTHERWISE) ARISING IN ANY WAY OUT OF THE USE OF THIS SOFTWARE, EVEN IF ADVISED OF THE POSSIBILITY OF SUCH DAMAGE. ----------
lldpd	lldpd is distributed under the ISC license: > Permission to use, copy, modify, and/or distribute this software for any > purpose with or without fee is hereby granted, provided that the above > copyright notice and this permission notice appear in all copies. > > THE SOFTWARE IS PROVIDED "AS IS" AND THE AUTHOR DISCLAIMS ALL WARRANTIES > WITH REGARD TO THIS SOFTWARE INCLUDING ALL IMPLIED WARRANTIES OF > MERCHANTABILITY AND FITNESS. IN NO EVENT SHALL THE AUTHOR BE LIABLE FOR > ANY SPECIAL, DIRECT, INDIRECT, OR CONSEQUENTIAL DAMAGES OR ANY DAMAGES > WHATSOEVER RESULTING FROM LOSS OF USE, DATA OR PROFITS, WHETHER IN AN > ACTION OF CONTRACT, NEGLIGENCE OR OTHER TORTIOUS ACTION, ARISING OUT OF > OR IN CONNECTION WITH THE USE OR PERFORMANCE OF THIS SOFTWARE. Also, `lldpcli` will be linked to GNU Readline (which is GPL licensed) if available. To avoid this, use `--without-readline` as a configure option. Copyright (c) 2008 Vincent Bernat <bernat@luffy.cx> * * Permission to use, copy, modify, and/or distribute this software for any * purpose with or without fee is hereby granted, provided that the above * copyright notice and this permission notice appear in all copies. * * THE SOFTWARE IS PROVIDED "AS IS" AND THE AUTHOR DISCLAIMS ALL WARRANTIES * WITH REGARD TO THIS SOFTWARE INCLUDING ALL IMPLIED WARRANTIES OF * MERCHANTABILITY AND FITNESS. IN NO EVENT SHALL THE AUTHOR BE LIABLE FOR * ANY SPECIAL, DIRECT, INDIRECT, OR CONSEQUENTIAL DAMAGES OR ANY DAMAGES * WHATSOEVER RESULTING FROM LOSS OF USE, DATA OR PROFITS, WHETHER IN AN * ACTION OF CONTRACT, NEGLIGENCE OR OTHER TORTIOUS ACTION, ARISING OUT OF * OR IN CONNECTION WITH THE USE OR PERFORMANCE OF THIS SOFTWARE. */
util-linux	GPLv2 See full license text on page 4-25. LGPLv2

See full license text on page 4-47.

BSD
See full license text on page 4-70.

Public Domain

Compliance with safety standards

This section lists the safety specifications against which the PTP 550 has been tested and certified. It also describes how to keep RF exposure within safe limits.

Electrical safety compliance

The PTP 550 hardware has been tested for compliance to the electrical safety specifications listed in Table 36.

Table 36 PTP 550 safety compliance specifications

Region	Standard
USA	UL 60950-1, 2nd Edition; UL60950-22
Canada	CAN/CSA C22.2 No.60950-1-07, 2nd Edition; CAN/CSA C22.2 No.60950-22-07
EU	EN 60950-1:2006 + Amendment 12:2011, EN 60950-22
International	CB certified to IEC 60950-1: 2005 (modified); IEC 60950-22: 2005 (modified)

Electromagnetic compatibility (EMC) compliance

The PTP 550 complies with European EMC Specification EN301 489-1 with testing carried out to the detailed requirements of EN301 489-4.

Note

For EN 61000-4-2: 1995 to 2009 Electro Static Discharge (ESD), Class 2, 8 kV air, 4 kV contact discharge, the PTP 550 has been tested to ensure immunity to 15 kV air and 8 kV contact.

Table 37 lists the EMC specification type approvals that have been granted for PTP 550 products.

Table 37 EMC emissions compliance

Region	Specification (Type Approvals)
Europe	ETSI EN301 489-4

Human exposure to radio frequency energy

Relevant standards (USA and EC) applicable when working with RF equipment are:

- ANSI IEEE C95.1-1991, IEEE Standard for Safety Levels with Respect to Human Exposure to Radio Frequency Electromagnetic Fields, 3 kHz to 300 GHz.
- Council recommendation of 12 July 1999 on the limitation of exposure of the general public to electromagnetic fields (0 Hz to 300 GHz) (1999/519/EC) and respective national regulations.
- *Directive 2004/40/EC of the European Parliament and of the Council of 29 April 2004* on the minimum health and safety requirements regarding the exposure of workers to the risks arising from physical agents (electromagnetic fields) (18th individual Directive within the meaning of Article 16(1) of Directive 89/391/EEC).
- US FCC limits for the general population. See the FCC web site at http://www.fcc.gov, and the policies, guidelines, and requirements in Part 1 of Title 47 of the Code of Federal Regulations, as well as the guidelines and suggestions for evaluating compliance in FCC OET Bulletin 65.
- Health Canada limits for the general population. See the Health Canada web site at http://www.hc-sc.gc.ca/ewh-semt/pubs/radiation/99ehd-dhm237/limits-limites_e.html and Safety Code 6.
- EN 50383:2002 to 2010 Basic standard for the calculation and measurement of electromagnetic field strength and SAR related to human exposure from radio base stations and fixed terminal stations for wireless telecommunication systems (110 MHz - 40 GHz).
- BS EN 50385:2002 Product standard to demonstrate the compliances of radio base stations and fixed terminal stations for wireless telecommunication systems with the basic restrictions or the reference levels related to human exposure to radio frequency electromagnetic fields (110 MHz – 40 GHz) – general public.
- ICNIRP (International Commission on Non-Ionizing Radiation Protection) guidelines for the general public. See the ICNIRP web site at http://www.icnirp.de/ and Guidelines for Limiting Exposure to Time-Varying Electric, Magnetic, and Electromagnetic Fields.

Power density exposure limit

Install the radios for the PTP 550 family of PTP wireless solutions so as to provide and maintain the minimum separation distances from all persons.

The applicable power density exposure limit for RF energy between 4900 MHz and 6050 MHz is **10 W/m^2**.

Calculation of power density

The following calculation is based on the ANSI IEEE C95.1-1991 method, as that provides a worst case analysis. Details of the assessment to EN50383:2002 can be provided, if required.

Peak power density in the far field of a radio frequency point source is calculated as follows:

$$S = \frac{P.G}{4\pi d^2}$$

Where:	Is:
S	power density in W/m^2
P	maximum average transmit power capability of the radio, in W
G	total Tx gain as a factor, converted from dB
d	distance from point source, in m

Rearranging terms to solve for distance yields:

$$d = \sqrt{\frac{P.G}{4\pi.S}}$$

Calculated distances

Table 38 shows calculated minimum separation distances, recommended distances and resulting margins for each frequency band and antenna combination. These are conservative distances that include compliance margins. At these and greater separation distances, the power density from the RF field is below generally accepted limits for the general population.

Calcul des distances pour la conformité aux limites de radiation radiofréquence

La **Table 39** indique les distances minimales de séparation calculées, les distances recommandées et les marges de sécurité qui en découlent pour chaque bande de fréquence et chaque antenne. Ces distances comprennent les marges de sécurité recommandées par les régulateurs. À ces distance et des distance supérieures, la densité de puissance du champ de radiofréquence est inférieur aux limites généralement admises pour la population.

Table 38 Minimum safe distances - FCC

Band	Channel Size	Antenna	P (W) (*1)	G (*2)	S (W/m^2) (*3)	D (m) (*4)
5.1 GHz	20 MHZ	On-board (2.0 dBi)	0.519	2	10	0.08
		Dish (22.0 dBi)	0.102	158	10	0.36
	80 MHz	On-board (2.0 dBi)	0.079	2	10	0.03
		Dish (22.0 dBi)	0.005	158	10	0.08
5.8 GHz	20 MHz	On-board (2.0 dBi)	0.495	2	10	0.08
		Dish (22.0 dBi)	0.020	158	10	0.16
	80 MHz	On-board (2.0 dBi)	0.153	2	10	0.04
		Dish (22.0 dBi)	0.008	158	10	0.10

(*1) P: maximum average transmit power capability of the radio including cable loss (Watt)

capacité de puissance d'émission moyenne maximale de la radio comprenant la perte dans les câble de connexion (W)

(*2) G: total transmit gain as a factor, converted from dB

gain total d'émission, converti à partir de la valeur en dB

(*3) S: power density (W/m^2)

densité de puissance (W/m^2)

(*4) d: minimum distance from point source (meters)

distance minimale de source ponctuelle (en mètres)

Table 39 Minimum safe distances - ISEDC

Band	Channel Size	Antenna	P (W) (*1)	G (*2)	S (W/m^2) (*3)	D (m) (*4)	S @ 20 cm (W/m^2) (*5)
5.8 GHz	20 MHZ	On-board (2.0 dBi)	0.495	2	9.69	0.08	1.56
		Dish (22.0 dBi)	0.020	158	9.69	0.16	0.48
	80 MHz	On-board (2.0 dBi)	0.153	2	9.69	0.04	6.29
		Dish (22.0 dBi)	0.008	158	9.69	0.10	2.60

(*1) P: maximum average transmit power capability of the radio including cable loss (Watt)

capacité de puissance d'émission moyenne maximale de la radio comprenant la perte dans les câble de connexion (W)

(*2) G: total transmit gain as a factor, converted from dB

gain total d'émission, converti à partir de la valeur en dB

(*3) S: power density (W/m^2)

densité de puissance (W/m^2)

(*4) d: minimum distance from point source (meters)

distance minimale de source ponctuelle (en mètres)

(*5) S @ 20 cm: power density (W/m2) at 20 cm

densité de puissance (W/m^2), 20 cm

Note

Gain of antenna in dBi = 10*log(G).

The regulations require that the power used for the calculations is the maximum power in the transmit burst subject to allowance for source-based time-averaging.

At 5.4 GHz and EU 5.8 GHz, the products are generally limited to a fixed EIRP which can be achieved with the Integrated Antenna. The calculations above assume that the maximum EIRP allowed by the regulations is being transmitted.

Note

If there are no EIRP limits in the country of deployment, use the distance calculations for FCC 5.8 GHz for all frequency bands.

At FCC 5.8 GHz, for antennas between 0.6m (2ft) and 1.8m (6ft), alter the distance proportionally to the antenna gain.

Remarque

Gain de l'antenne en dBi = 10 * log (G).

Les règlements exigent que la puissance utilisée pour les calculs soit la puissance maximale de la rafale de transmission soumis à une réduction pour prendre en compte le rapport cyclique pour les signaux modulés dans le temps.

Pour une opération dans la CEE dans les bandes 5,4 GHz et 5,8 GHz, les produits sont généralement limités à une PIRE qui peut être atteinte avec l'antenne intégrée. Les calculs ci-dessus supposent que la PIRE maximale autorisée par la réglementation est atteinte.

Remarque

Si aucune limite de PIRE existe pour le pays de déploiement, utilisez les calculs de distance pour FCC 5,8 GHz pour toutes les bandes de fréquence.

Pour la band FCC 5,8 GHz et les antennes entre 0,6 m (2 pieds) et 1,8 m (6 pieds), modifier la distance proportionnellement au gain de l'antenne.

Compliance with radio regulations

This section describes how the PTP 550 complies with the radio regulations that are in force in various countries.

Caution

Where necessary, the end user is responsible for obtaining any National licenses required to operate this product and these must be obtained before using the product in any particular country. Contact the appropriate national administrations for details of the conditions of use for the bands in question and any exceptions that might apply.

Caution

Changes or modifications not expressly approved by Cambium Networks could void the user’s authority to operate the system.

Caution

For the connectorized version of the product and in order to reduce potential radio interference to other users, the antenna type and its gain should be so chosen that the Effective Isotropically Radiated Power (EIRP) is not more than that permitted for successful communication.

Attention

Le cas échéant, l'utilisateur final est responsable de l'obtention des licences nationales nécessaires pour faire fonctionner ce produit. Celles-ci doivent être obtenus avant d'utiliser le produit dans un pays particulier. Contactez les administrations nationales concernées pour les détails des conditions d'utilisation des bandes en question, et toutes les exceptions qui pourraient s'appliquer

Attention

Les changements ou modifications non expressément approuvés par les réseaux de Cambium pourraient annuler l'autorité de l'utilisateur à faire fonctionner le système.

Attention

Pour la version du produit avec une antenne externe, et afin de réduire le risque d'interférence avec d'autres utilisateurs, le type d'antenne et son gain doivent être choisis afin que la puissance isotrope rayonnée équivalente (PIRE) ne soit pas supérieure au minimum nécessaire pour établir une liaison de la qualité requise.

Type approvals

The system has been tested against various local technical regulations and found to comply. Table 40 to Table 43 list the radio specification type approvals that have been granted for PTP 550 products.

Some of the frequency bands in which the system operates are “license exempt” and the system is allowed to be used provided it does not cause interference. In these bands, the licensing authority does not guarantee protection against interference from other products and installations.

Table 40 Radio certifications (5.1 GHz)

Region	Regulatory approvals
USA	FCC 47 CFR Part 15 E

Table 41 Radio certifications (5.2 GHz)

Region	Regulatory approvals
USA	FCC 47 CFR Part 15 E
Canada	IC RSS-210 Issue 8, Annex 9 (or latest)

Table 42 Radio certifications (5.4 GHz)

Region	Regulatory approvals
USA	FCC 47 CFR Part 15 E
Canada	IC RSS-210 Issue 8, Annex 9 (or latest)
Europe	ETSI EN301 893 v1.6.1

Table 43 Radio certifications (5.8 GHz)

Region	Regulatory approvals
USA	FCC 47 CFR Part 15 C
Canada	IC RSS-210 Issue 8, Annex 8 (or latest)
Denmark	Radio Interface 00 007
Eire	ComReg 02/71R4
Germany	Order No 47/2007
Iceland	ETSI EN302 502 v1.2.1
Finland	ETSI EN302 502 v1.2.1
Greece	ETSI EN302 502 v1.2.1
Liechtenstein	ETSI EN302 502 v1.2.1
Norway	REG 2009-06-02 no. 580
Portugal	ETSI EN302 502 v1.2.1
Serbia	ETSI EN302 502 v1.2.1
Spain	CNAF 2010
Switzerland	ETSI EN302 502 v1.2.1
UK	UK IR 2007

FCC/IC compliance

The PTP 550 complies with the regulations that are in force in the USA and Canada.

Caution

If a PTP 550 unit is interfering with radio or television reception (this can be determined by turning the equipment off and on), attempt the following corrective actions:

- Realign or relocate the antenna.
- Increase the separation between the affected equipment and antenna.
- Connect the ODU and PSU power supply into a power outlet on a circuit different from that to which the receiver is connected.
- Contact Cambium Point-to-Point for assistance.

FCC product labels

FCC identifiers are reproduced on the product labels for the FCC/IC regional variant (Figure 27 and Figure 28).

Figure 27 FCC and IC certifications on integrated ODU product labels

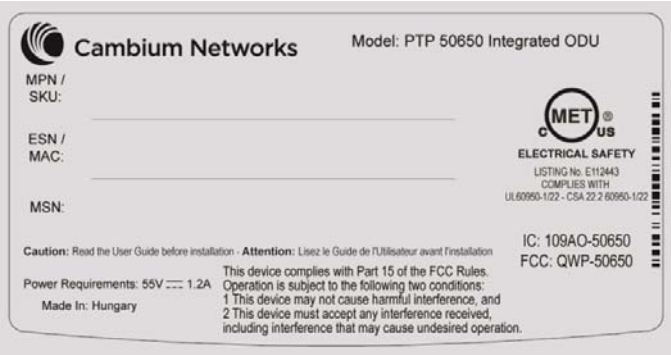

Figure 28 FCC and IC certifications on connectorized ODU product labels

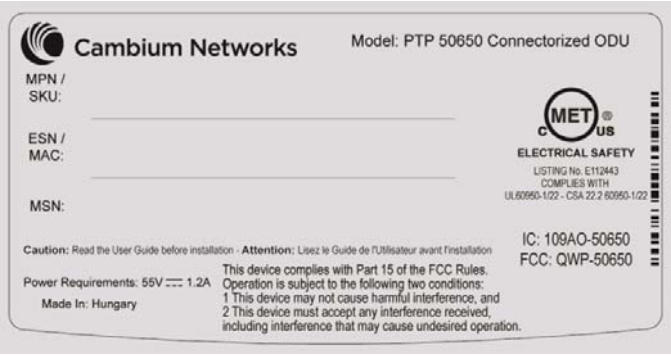

Industry Canada product labels

Industry Canada Certification Numbers are reproduced on the product labels for the FCC/IC regional variant (Figure 27 and Figure 28) and also on the Rest of the World (RoW) regional variant (Figure 29 and Figure 30).

Figure 29 IC certification on integrated ODU product labels

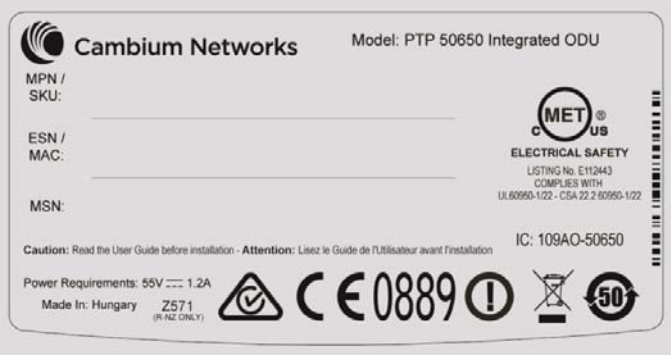

Figure 30 IC certification on connectorized ODU product labels

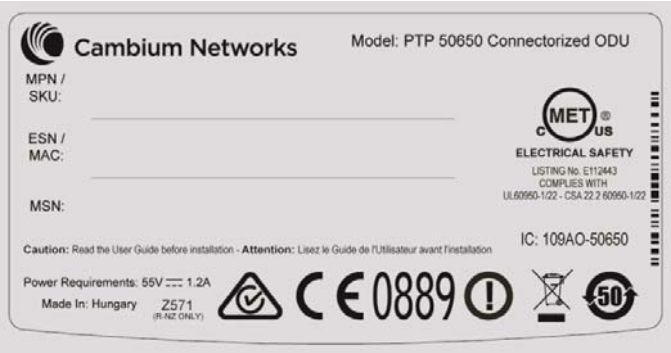

5.1 GHz FCC notification

This device complies with part 15E of the US FCC Rules and Regulations. Operation is subject to the following two conditions: (1) This device may not cause harmful interference, and (2) This device must accept any interference received, including interference that may cause undesired operation.

For the connectorized version of the product and in order to reduce potential radio interference to other users, the antenna type and its gain should be so chosen that the equivalent isotropically radiated power (EIRP) is not more than that permitted by the regulations. The transmitted power must be reduced to achieve this requirement.

5.2 GHz and 5.4 GHz FCC and IC notification

This device complies with part 15E of the US FCC Rules and Regulations and with Industry Canada RSS-210 Annex 9. Operation is subject to the following two conditions: (1) This device may not cause harmful interference, and (2) This device must accept any interference received, including interference that may cause undesired operation. In Canada, users should be cautioned to take note that high power radars are allocated as primary users (meaning they have priority) of 5250 – 5350 MHz and 5650 – 5850 MHz and these radars could cause interference and/or damage to license-exempt local area networks (LELAN).

For the connectorized version of the product and in order to reduce potential radio interference to other users, the antenna type and its gain should be so chosen that the equivalent isotropically radiated power (EIRP) is not more than that permitted by the regulations. The transmitted power must be reduced to achieve this requirement.

Utilisation de la bande 5.4 GHz FCC et IC

Cet appareil est conforme à la Section 15E de la réglementation FCC aux États-Unis et aux règlementations et avec Industrie Canada RSS-210 Annexe 9. Son fonctionnement est soumis aux deux conditions suivantes: (1) Ce dispositif ne doit pas causer d'interférences nuisibles, et (2) Cet appareil doit tolérer toute interférence reçue, y compris les interférences pouvant entraîner un fonctionnement indésirable. Au Canada, les utilisateurs doivent prendre garde au fait que les radars à haute puissance sont considères comme les utilisateurs prioritaires de 5250 à 5350 MHz et 5650 à 5850 MHz et ces radars peuvent causer des interférences et / ou interférer avec un réseau local ne nécessitant pas de licence.

Pour la version du produit avec antenne externe et afin de réduire le risque d'interférence avec d'autres utilisateurs, le type d'antenne et son gain doivent être choisis afin que la puissance isotrope rayonnée équivalente (PIRE) ne soit pas supérieure à celle permise par la règlementation. Il peut être nécessaire de réduire la puissance transmise doit être réduite pour satisfaire cette exigence.

5.8 GHz FCC notification

This device complies with part 15C of the US FCC Rules. Operation is subject to the following two conditions: (1) This device may not cause harmful interference, and (2) This device must accept any interference received, including interference that may cause undesired operation.

5.8 GHz IC notification

RSS-GEN issue 3 (7.1.3) Licence-Exempt Radio Apparatus:

> This device complies with Industry Canada license-exempt RSS standard(s). Operation is subject to the following two conditions: (1) this device may not cause interference, and (2) this device must accept any interference, including interference that may cause undesired operation of the device.
>
> *Le présent appareil est conforme aux CNR d'Industrie Canada applicables aux appareils radio exempts de licence. L'exploitation est autorisée aux deux conditions suivantes : (1) l'appareil ne doit pas produire de brouillage, et (2) l'utilisateur de l'appareil doit accepter tout brouillage radioélectrique subi, même si le brouillage est susceptible d'en compromettre le fonctionnement.*

In Canada, high power radars are allocated as primary users (meaning they have priority) of the 5650 – 5850 MHz spectrum. These radars could cause interference or damage to license-exempt local area network (LE-LAN) devices.

Au Canada, les radars à haute puissance sont désignés comme utilisateurs principaux (ils ont la priorité) de la 5650 - spectre 5850 MHz. Ces radars peuvent causer des interférences et / ou interférer avec un réseau local ne nécessitant pas de licence.

5.1 GHz band edge channel power reduction

Equivalent isotropic radiated power (EIRP) is restricted in edge channels when the PTP 550 is operated the 5.1 GHz band with the USA country license. The amount of EIRP reduction has been determined during regulatory testing and cannot be changed by professional installers or end users. Units intended for the USA market are locked for use in the USA and cannot be operated under the regulations for other regulatory domains.

The PTP 550 takes into account the antenna gain and cable loss configured by the professional installer in the web-based interface to limit the EIRP to ensure regulatory compliance. No additional action is required by the installer to reduce transmitter power in band edge channels.

The maximum EIRP in band edge channels for the USA 5.1 GHz band is listed in Table 44.

Table 44 Edge channel power reduction in regulatory band 84

Channel Bandwidth	Channel Frequency	Maximum EIRP
20 MHz	Below 5175	23 dBm
	5175 to 5187	30 dBm
	Above 5187	36 dBm
40 MHz	Below 5200	24 dBm
	5200 and above	30 dBm
80 MHz	Below 5205	23 dBm
	5205 and above	30 dBm

5.2 GHz band edge channel power reduction

Equivalent isotropic radiated power (EIRP) is restricted in edge channels when the PTP 550 is operated the 5.2 GHz band with the USA or Canada country license. The amount of EIRP reduction has been determined during regulatory testing and cannot be changed by professional installers or end users. Units intended for the USA and Canada market are locked for use in the USA or Canada and cannot be operated under the regulations for other regulatory domains.

The PTP 550 takes into account the antenna gain and cable loss configured by the professional installer in the web-based interface to limit the EIRP to ensure regulatory compliance. No additional action is required by the installer to reduce transmitter power in band edge channels.

The maximum EIRP in band edge channels for the USA and Canada 5.2 GHz band is listed in Table 45.

Table 45 Edge channel power reduction in regulatory band 38

Channel Bandwidth	Channel Frequency	Maximum EIRP
20 MHz	Below 5271.0 MHz	25 dBm
	Above 5325.0 MHz	21 dBm
40 MHz	Below 5290.0 MHz	24 dBm
	Above 5299.0 MHz	20 dBm
80 MHz		

5.4 GHz band edge channel power reduction

Equivalent isotropic radiated power (EIRP) is restricted in edge channels when the PTP 550 is operated the 5.4 GHz band with the USA or Canada country license. The amount of EIRP reduction has been determined during regulatory testing and cannot be changed by professional installers or end users. Units intended for the USA and Canada market are locked for use in the USA or Canada and cannot be operated under the regulations for other regulatory domains.

The PTP 550 takes into account the antenna gain and cable loss configured by the professional installer in the web-based interface to limit the EIRP to ensure regulatory compliance. No additional action is required by the installer to reduce transmitter power in band edge channels.

The maximum EIRP in band edge channels for the USA and Canada 5.4 GHz band is listed in Table 46.

Réduction de puissance aux bords de la bande 5.4 GHz

La Puissance isotrope rayonnée équivalente (PIRE) est limitée dans les canaux en bord de la bandes lorsque le PTP 550 est configuré pour utiliser la band 5,4 GHz aux les Etats-Unis ou au Canada. La réduction de la PIRE a été déterminée lors de tests réglementaires et ne peut être changée par des installateurs professionnels ou les utilisateurs. Les PTP 550 destinées aux USA et Canada sont limitées pour opérer exclusivement aux États-Unis ou au Canada et ne peuvent pas être configurés pour adhérer à la réglementation d'autres pays.

Le PTP 550 prend en compte le gain de l'antenne et les pertes des câbles de connexion configurés par l'installateur professionnel via l'interface graphique pour limiter la PIRE pour assurer la conformité à la réglementation en vigueur. Aucune action supplémentaire n'est requise par l'installateur afin de réduire la puissance d'émission dans les canaux aux bords de bande.

La PIRE maximale dans les canaux aux bords de bande 5,4 GHz pour les Etats-Unis et le Canada est listée dans la Table 46.

Table 46 Edge channel power reduction in regulatory bands 12 and 13

Channel Bandwidth	Channel Frequency	Maximum EIRP
20 MHz	Below 5482.0 MHz	30 dBm
	Above 5704.0 MHz	23 dBm
40 MHz	Below 5500.0 MHz	28 dBm
	Above 5691.0 MHz	24 dBm
80 MHz		

5.8 GHz band edge channel power reduction

Transmitter power is restricted in edge channels when the PTP 550 is operated the 5.8 GHz band with the USA or Canada country license. The amount of transmitter power reduction has been determined during regulatory testing and cannot be changed by professional installers or end users. Units intended for the USA and Canada market are locked for use in the USA or Canada and cannot be operated under the regulations for other regulatory domains.

The maximum transmitter power in band edge channels for the FCC 5.8 GHz band is listed in Table 47.

Réduction de puissance aux bords de la bande 5.8 GHz

La Puissance isotrope rayonnée équivalente (PIRE) est limitée dans les canaux en bord de la bandes lorsque le PTP 550 est configuré pour utiliser la band 5,8 GHz aux les Etats-Unis ou au Canada. La réduction de la PIRE a été déterminée lors de tests réglementaires et ne peut être changée par des installateurs professionnels ou les utilisateurs. Les PTP 550 destinées aux USA et Canada sont limitées pour opérer exclusivement aux États-Unis ou au Canada et ne peuvent pas être configurés pour adhérer à la réglementation d'autres pays.

La PIRE maximale dans les canaux aux bords de bande 5,4 GHz pour les Etats-Unis et le Canada est listée dans la Table 47.

Table 47 Edge channel power reduction in regulatory band 1

Channel Bandwidth	Channel Frequency	Maximum conducted power
20 MHz	Below 5742.0 MHz	25 dBm
	Above 5832.0 MHz	25 dBm
40 MHz	Below 5765.0 MHz	25 dBm
	Above 5810.0 MHz	25 dBm
80 MHz		

Selection of antennas

For guidance on the selection of dedicated external antennas refer to Choosing external antennas on page 3-54.

For a list of antennas submitted to the FCC and IC for use with the PTP 550 refer to FCC and IC approved antennas on page 2-15.

Note

Under Industry Canada regulations, this radio transmitter may only operate using an antenna of a type and maximum (or lesser) gain approved for the transmitter by Industry Canada. To reduce potential radio interference to other users, the antenna type and its gain should be so chosen that the equivalent isotropically radiated power (EIRP) is not more than that necessary for successful communication.

Remarque

Conformément à la réglementation d'Industrie Canada, le présent émetteur radio peut fonctionner avec une antenne d'un type et d'un gain maximal (ou inférieur) approuvé pour l'émetteur par Industrie Canada. Dans le but de réduire les risques de brouillage radioélectrique à l'intention des autres utilisateurs, il faut choisir le type d'antenne et son gain de sorte que la puissance isotrope rayonnée équivalente (p.i.r.e.) ne dépasse pas l'intensité nécessaire à l'établissement d'une communication satisfaisante.

European Union compliance

The PTP 550 complies with the regulations that are in force in the European Union.

Warning

This is a Class A product. In a domestic environment this product may cause radio interference, in which case the user may be required to take adequate measures.

If a PTP 550 unit is interfering with radio or television reception (this can be determined by turning the equipment off and on), attempt the following corrective actions:

- Realign or relocate the antenna.
- Increase the separation between the affected equipment and antenna.
- Connect the ODU and PSU power supply into a power outlet on a circuit different from that to which the receiver is connected.

Contact Cambium Point-to-Point for assistance.

EU product labels

The European R&TTE directive 1999/5/EC Certification Number is reproduced on the product labels (Figure 31 and Figure 32).

Figure 31 European Union certification on integrated product label

Figure 32 European Union certification on connectorized product label

5.4 GHz European Union notification

The PTP 550 product is a two-way radio transceiver suitable for use in Broadband Wireless Access System (WAS), Radio Local Area Network (RLAN), or Fixed Wireless Access (FWA) systems. It is a Class 1 device and uses operating frequencies that are harmonized throughout the EU member states. The operator is responsible for obtaining any national licenses required to operate this product and these must be obtained before using the product in any particular country.

Hereby, Cambium Networks declares that the PTP 550 product complies with the essential requirements and other relevant provisions of Directive 1999/5/EC. The declaration of conformity may be consulted at the support website (see Contacting Cambium Networks on page 1).

5.8 GHz European Union notification

The PTP 550 is a Class 2 device as it operates on frequencies that are not harmonized across the EU. Currently the product may only be operated in the countries listed in Table 43. However, the regulatory situation in Europe is changing and the radio spectrum may become available in other countries in future. See www.ero.dk for further information. The operator is responsible for obtaining any national licenses required to operate this product and these must be obtained before using the product in any particular country.

Caution

This equipment operates as a secondary application, so it has no rights against harmful interference, even if generated by similar equipment, and must not cause harmful interference on systems operating as primary applications.

Hereby, Cambium Networks declares that the PTP 550 product complies with the essential requirements and other relevant provisions of Directive 1999/5/EC. The declaration of conformity may be consulted at the support website (see Contacting Cambium Networks on page 1).

5.8 GHz operation in the UK

The PTP 550 Connectorized product has been notified for operation in the UK, and when operated in accordance with instructions for use it is compliant with UK Interface Requirement IR2007. For UK use, installations must conform to the requirements of IR2007 in terms of EIRP spectral density against elevation profile above the local horizon in order to protect Fixed Satellite Services. The frequency range 5795-5815 MHz is assigned to Road Transport & Traffic Telematics (RTTT) in the U.K. and shall not be used by FWA systems in order to protect RTTT devices. UK Interface Requirement IR2007 specifies that radiolocation services shall be protected by a Dynamic Frequency Selection (DFS) mechanism to prevent co-channel operation in the presence of radar signals.

Chapter 5: Installation

This chapter describes how to install and test the hardware for a PTP 550 link. It contains the following topics:

- Safety on page 5-2 contains important safety guidelines that must be observed by personnel installing or operating PTP 550 equipment.
- Installing the ODU and top LPU on page 5-5 describes how to mount and ground an integrated or connectorized ODU, how to mount and ground the top LPU.
- Install external antennas for a connectorized ODU on page 5-10 describes how to mount and connect an external antenna for the connectorized ODU.
- Installing the copper Cat5e Ethernet interface on page 5-12 describes how to install the copper Cat5e power over Ethernet interface from the ODU (PSU port) to the PSU.
- Installing the PSU on page 5-20 describes how to install a power supply unit for the PTP 550, either the AC Power Injector or the AC+DC Enhanced Power Injector.
- Installing an SFP Ethernet interface on page 5-22 describes how to install an optical or copper Cat5e Ethernet interface from the ODU (SFP port) to a connected device.
- Supplemental installation information on page 5-31 contains detailed installation procedures that are not included in the above topics, such as how to strip cables, create grounding points and weatherproof connectors.

Note

These instructions assume that LPUs are being installed from the LPU and grounding kit (Cambium part number C000065L007). If the installation does not require LPUs, adapt these instructions as appropriate.

If LPUs are being installed, only use the five black-capped EMC cable glands supplied in the LPU and grounding kit. The silver-capped cable glands supplied in the ODU kits must only be used in PTP 550 installations which do not require LPUs.

Safety

Warning

To prevent loss of life or physical injury, observe the following safety guidelines. In no event shall Cambium Networks be liable for any injury or damage caused during the installation of the Cambium PTP 550. Ensure that only qualified personnel install a PTP 550 link.

Power lines

Exercise extreme care when working near power lines.

Working at heights

Exercise extreme care when working at heights.

PSU

Always use one of the Cambium PTP 550 Series power supply units (PSU) to power the ODU. Failure to use a Cambium supplied PSU could result in equipment damage and will invalidate the safety certification and may cause a safety hazard.

Grounding and protective earth

The Outdoor Unit (ODU) must be properly grounded to protect against lightning. It is the user's responsibility to install the equipment in accordance with national regulations. In the USA follow the requirements of the National Electrical code NFPA 70-2005 and 780-2004 *Installation of Lightning Protection Systems*. In Canada, follow Section 54 of the *Canadian Electrical Code*. These codes describe correct installation procedures for grounding the outdoor unit, mast, lead-in wire and discharge unit, size of grounding conductors and connection requirements for grounding electrodes. Other regulations may apply in different countries and therefore it is recommended that installation of the outdoor unit be contracted to a professional installer.

AC supply

To power the ODU from an AC supply, use the AC+DC Enhanced Power Injector (PSU) (Cambium part number C000065L002).

Always use an appropriately rated and approved AC supply cord-set in accordance with the regulations of the country of use.

DC supply

To power the ODU from a DC supply, use the AC+DC Enhanced Power Injector (PSU) (Cambium part number C000065L002). Ensure that the DC power supply meets the requirements specified in PSU DC power supply on page 3-42.

Powering down before servicing

Before servicing PTP 550 equipment, always switch off the power supply and unplug it from the PSU.

Do not disconnect the RJ45 drop cable connectors from the ODU while the PSU is connected to the power supply. Always remove the AC or DC input power from the PSU.

Primary disconnect device

The main power supply is the primary disconnect device. The AC+DC Enhanced power injector is fused on the DC input. Some installations will also require an additional circuit breaker or isolation switch to be fitted in the DC supply.

External cables

Safety may be compromised if outdoor rated cables are not used for connections that will be exposed to the outdoor environment. For outdoor copper Cat5e Ethernet interfaces, always use Cat5e cable that is gel-filled and shielded with copper-plated steel. Alternative types of drop cable are not supported by Cambium Networks.

Drop cable tester

The PSU output voltage may be hazardous in some conditions, for example in wet weather. Do NOT connect the drop cable tester to the PSU, either directly or via LPUs.

RF exposure near the antenna

Strong radio frequency (RF) fields will be present close to the antenna when the transmitter is on. Always turn off the power to the ODU before undertaking maintenance activities in front of the antenna.

Minimum separation distances

Ensure that personnel are not exposed to unsafe levels of RF energy. The units start to radiate RF energy as soon as they are powered up. Never work in front of the antenna when the ODU is powered. Install the ODUs so as to provide and maintain the minimum separation distances from all persons. For minimum separation distances, see Calculated distances on page 4-117.

Grounding and lightning protection requirements

Ensure that the installation meets the requirements defined in Grounding and lightning protection on page 3-39.

Grounding cable installation methods

To provide effective protection against lightning induced surges, observe these requirements:

- Grounding conductor runs are as short, straight and smooth as possible, with bends and curves kept to a minimum.
- Grounding cables must not be installed with drip loops.
- All bends must have a minimum radius of 200 mm (8 in) and a minimum angle of 90°. A diagonal run is preferable to a bend, even though it does not follow the contour or run parallel to the supporting structure.
- All bends, curves and connections must be routed towards the grounding electrode system, ground rod, or ground bar.
- Grounding conductors must be securely fastened.
- Braided grounding conductors must not be used.
- Approved bonding techniques must be used for the connection of dissimilar metals.

Siting ODUs and antennas

ODUs and external antennas are not designed to survive direct lightning strikes. For this reason they must be installed in Zone B as defined in Lightning protection zones on page 3-39. Mounting in Zone A may put equipment, structures and life at risk.

Thermal Safety

The ODU enclosure may be hot to the touch when in operation. The ODU must not be operated in ambient temperatures exceeding 40°C unless mounted in a Restricted Access Location. For more information, see ODU ambient temperature limits on page 3-41.

Warning

Do not install the ODU in a location where the ambient temperature could exceed 40°C unless this is a Restricted Access Location as defined by EN 60950-1.

Alerte

L'unité externe ne doit pas être installée dans un endroit où la température ambiante est supérieure à 40C à moins que l'accès soit limité au personnel autorisé.

Installing the ODU and top LPU

To install the ODU and top LPU, use the following procedures:

- Attach ground cables to the ODU on page 5-5
- Mount the ODU on the mast on page 5-5
- Mount the top LPU on page 5-8
- Interconnect and ground the ODU and top LPU on page 5-8

Attach ground cables to the ODU

1. Fasten one ground cable to each ODU grounding point using the M6 (small) lugs: one is for the top LPU (M6 lug at other end) and the other is for the tower or building (M10 lug at other end). It does not matter which cable goes on which ODU grounding point.
2. Tighten both ODU grounding bolts to a torque of 5 Nm (3.9 lb ft).

Mount the ODU on the mast

Refer to individual procedures below for mounting the PTP 550 ODU:

- Low profile bracket on small diameter pole on page 5-6
- Low profile bracket on large pole on page 5-7

Low profile bracket on small diameter pole

1. Fix the low profile bracket to the back of the ODU using the M6 bolts and washers provided. Tighten the four bolts to a torque setting of 5.0 Nm (3.7 lb ft).
2. Pass the M8 coach bolts through the square holes in the hinged portion of the bracket. Close the bracket. Two M6 bolts should pass through slots in the fixed portion of the bracket. Ensure that the spring and plain washers of the M6 bolts are on the outside of the bracket assembly. Tighten the four M6 bolts to ensure that the bracket cannot open accidentally.
3. Hoist the ODU to the mounting position.
4. Attach the bracket to the pole using the bracket clamp, washers and M8 nuts.
5. Alternatively, use the LPU in place of the clamp to provide a back-to-back arrangement.
6. Adjust the azimuth to achieve visual alignment. Tighten the two M8 bracket nuts to a torque setting of 8.0 Nm (6.0 lb ft). Do not over-tighten these nuts as this may lead to failure of the assembly.
7. Adjust the elevation to achieve visual alignment. Tighten the four M6 bolts to a torque setting of 5.0 Nm (3.7 lb ft).

Low profile bracket on large pole

1. Fix the low profile bracket to the back of the ODU using the M6 bolts and washers provided. Tighten the four bolts to a torque setting of 5.0 Nm (3.7 lb ft). This step is common with the low profile bracket on a smaller diameter pole.
2. Close the bracket. Two M6 bolts should pass through slots in the fixed portion of the bracket. Ensure that the spring and plain washers of the M6 bolts are on the outside of the bracket assembly. Tighten the four M6 bolts to ensure that the bracket cannot open accidentally. Feed the Jubilee straps through the slots in the adaptor plate. This is similar to the procedure for the large diameter extension kit.
3. Hoist the ODU to the mounting position.
4. Attach the bracket to the pole using the Jubilee straps.
5. Adjust the azimuth to achieve visual alignment. Tighten the Jubilee straps to a torque setting of 6.0 Nm (4.5 lb ft).
6. Adjust the elevation to achieve visual alignment. Tighten the four M6 bolts to a torque setting of 5.0 Nm (3.7 lb ft).

Mount the top LPU

1 For separate LPU mounting, use the U-bolt bracket from the LPU kit to mount the top LPU on the pole below the ODU. Tighten to a torque setting of 7.0 Nm (5.2 lb ft):

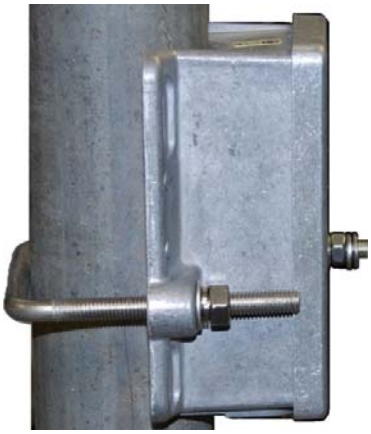

Interconnect and ground the ODU and top LPU

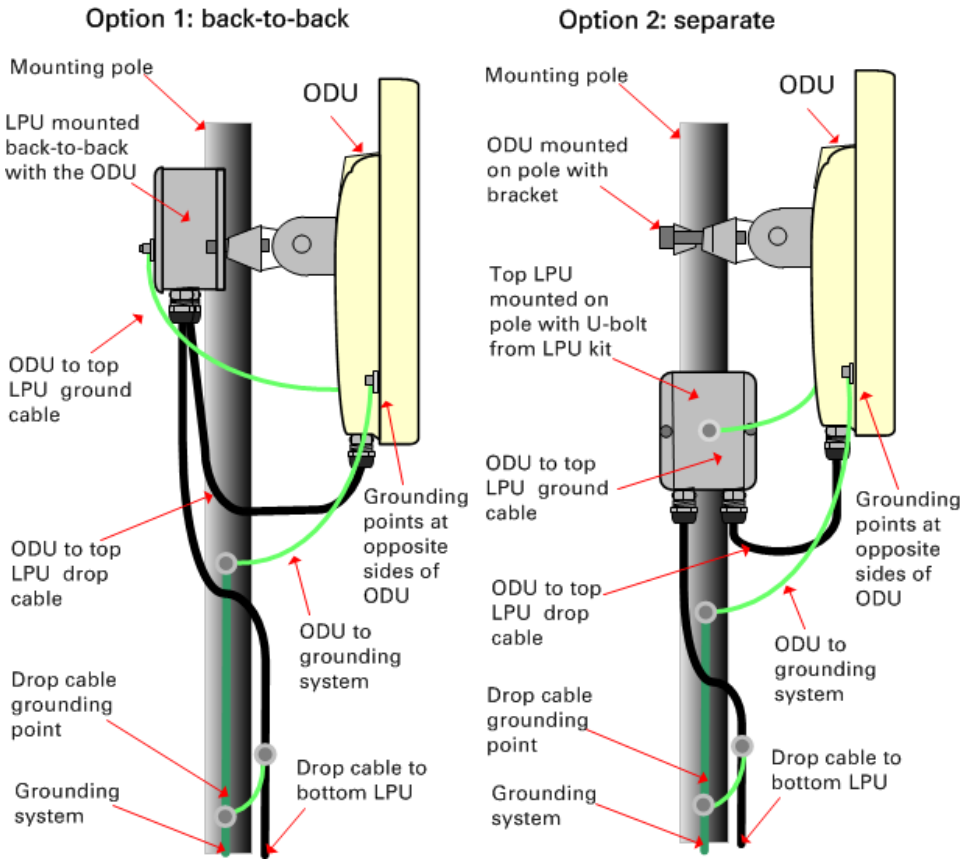

Caution

Do not attach grounding cables to the ODU mounting bracket bolts, as this arrangement will not provide full protection.

1 Fasten the ODU grounding cable to the top LPU using the M6 (small) lug. Tighten both nuts to a torque of 5 Nm (3.9 lb ft):

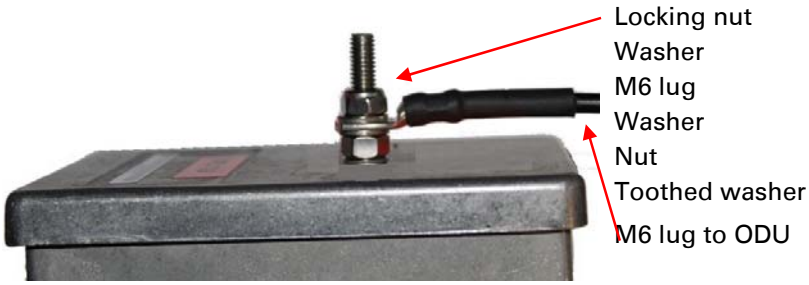

2 Select a tower or building grounding point within 0.3 meters (1 ft) of the ODU bracket. Remove paint from the surface and apply anti-oxidant compound. Fasten the ODU grounding cable to this point using the M10 (large) lug.

3 If local regulations mandate the independent grounding of all devices, add a third ground cable to connect the top LPU directly to the grounding system.

Install external antennas for a connectorized ODU

To mount and connect an external antenna for the connectorized ODU, proceed as follows:

1. Mount the antenna(s) according to manufacturer's instructions. When using separate antennas to achieve spatial diversity, mount one with Horizontal polarization and the other with Vertical polarization.
2. Connect the ODU V and H interfaces to the antenna(s) with RF cable of type LMR-400 (Cambium part numbers 30010194001 and 30010195001) and N type connectors (Cambium part number 09010091001). Tighten the N type connectors to a torque setting of 1.7 Nm (1.3 lb ft).
3. If the ODU is mounted indoors, install lightning arrestors at the building entry point:
4. Form drip loops near the lower ends of the antenna cables. These ensure that water is not channeled towards the connectors.
5. If the ODU is mounted outdoors, weatherproof the N type connectors (when antenna alignment is complete) using PVC tape and self-amalgamating rubber tape.
6. Weatherproof the antenna connectors in the same way (unless the antenna manufacturer specifies a different method).

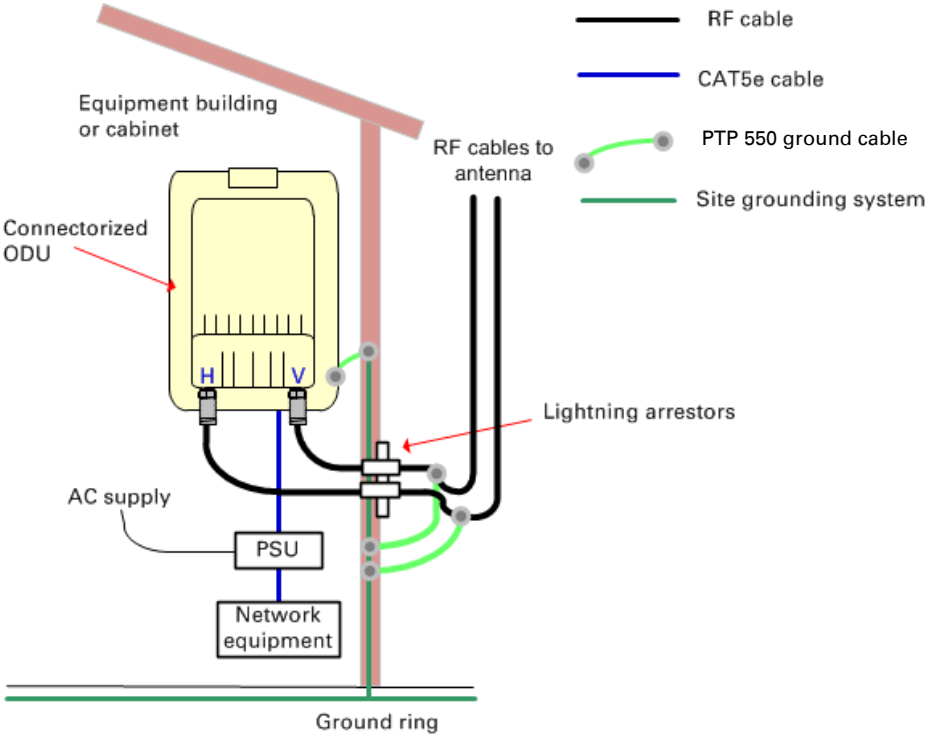

7 Ground the antenna cables to the supporting structure within 0.3 meters (1 foot) of the ODU and antennas using the Cambium grounding kit (part number 01010419001):

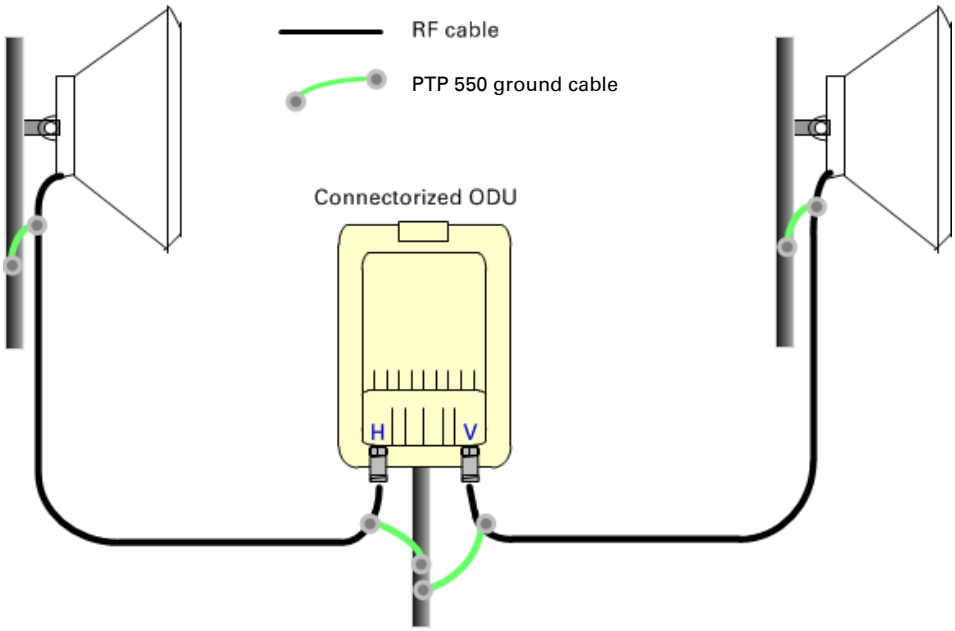

8 Fix the antenna cables to the supporting structure using site approved methods. Ensure that no undue strain is placed on the ODU or antenna connectors. Ensure that the cables do not flap in the wind, as flapping cables are prone to damage and induce unwanted vibrations in the supporting structure.

Installing the copper Cat5e Ethernet interface

To install the copper Cat5e Ethernet interface, use the following procedures:

- Install the ODU to top LPU drop cable on page 5-12
- Install the main drop cable on page 5-14
- Install the bottom LPU to PSU drop cable on page 5-16
- Test resistance in the drop cable on page 5-18

Caution

To avoid damage to the installation, do not connect or disconnect the drop cable when power is applied to the PSU or network terminating equipment.

Caution

Do not connect the SFP drop cables to the PSU, as this may damage equipment.

Caution

Always use Cat5e cable that is gel-filled and shielded with copper-plated steel. Alternative types of Cat5e cable are not supported by Cambium Networks. Cambium Networks supply this cable (Cambium part numbers WB3175 and WB3176), RJ45 connectors (Cambium part number WB3177) and a crimp tool (Cambium part number WB3211). The LPU and grounding kit contains a 600 mm length of this cable.

Install the ODU to top LPU drop cable

Fit glands to the ODU to top LPU drop cable

Fit EMC strain relief cable glands (with black caps) to both ends of the 600 mm length of pre-terminated cable. These parts are supplied in the LPU and grounding kit.

1 Disassemble the gland and thread each part onto the cable (the rubber bung is split). Assemble the spring clip and the rubber bung:

2 Fit the parts into the body and lightly screw on the gland nut (do not tighten it):

Connect the drop cable to the ODU (PSU port) and LPU

1 (a) Plug the RJ45 connector into the socket in the unit, ensuring that it snaps home.
(b) Fit the gland body to the RJ45 port and tighten it to a torque of 5.5 Nm (4.3 lb ft):

(a)

(b)

2 (a) Fit the gland nut and tighten until the rubber seal closes on the cable. (b) Do not over-tighten the gland nut, as there is a risk of damage to its internal components:

(a)

(b)

Correct Incorrect

Disconnect the drop cable from the LPU or ODU

Use this procedure if it is necessary to remove an EMC strain relief cable gland and RJ45 connector from the ODU (as illustrated) or LPU.

1 (a) Remove the gland nut. Wiggle the drop cable to release the tension of the gland body. When the tension in the gland body is released, a gap opens at the point show. Unscrew the gland body.
(b) Use a small screwdriver to press the RJ45 locking tab, then remove the RJ45 connector.

(a)

(b)

Install the main drop cable

Warning

The metal screen of the drop cable is very sharp and may cause personal injury.

- ALWAYS wear cut-resistant gloves (check the label to ensure they are cut resistant).
- ALWAYS wear protective eyewear.
- ALWAYS use a rotary blade tool to strip the cable (DO NOT use a bladed knife).

Warning

Failure to obey the following precautions may result in injury or death:

- Use the proper hoisting grip for the cable being installed. If the wrong hoisting grip is used, slippage or insufficient gripping strength will result.
- Do not reuse hoisting grips. Used grips may have lost elasticity, stretched, or become weakened. Reusing a grip can cause the cable to slip, break, or fall.
- The minimum requirement is one hoisting grip for each 60 m (200 ft) of cable.

Cut to length and fit hoisting grips

1 Cut the main drop cable to length from the top LPU to the bottom LPU.

2 Slide one or more hoisting grips onto the top end of the drop cable.

3 Secure the hoisting grip to the cable using a special tool, as recommended by the manufacturer.

Terminate with RJ45 connectors and glands

Caution

Check that the crimp tool matches the RJ45 connector, otherwise the cable or connector may be damaged.

1 Thread the cable gland (with black cap) onto the main drop cable.

2 Strip the cable outer sheath and fit the RJ45 connector load bar.

3 Fit the RJ45 connector housing as shown. To ensure there is effective strain relief, locate the cable inner sheath under the connector housing tang. Do not tighten the gland nut:

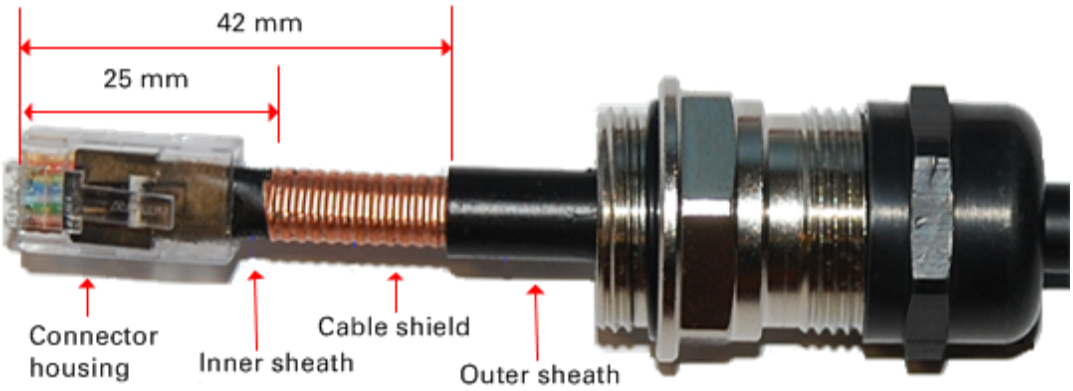

Pin	Color (Supplied cable)	Color (Conventional)	Pins on plug face
1	Light Orange	White/Orange	
2	Orange	Orange	
3	Light Green	White/Green	
4	Blue	Blue	
5	Light Blue	White/Blue	
6	Green	Green	
7	Light Brown	White/Brown	
8	Brown	Brown	

Hoist and fix the main drop cable

Warning

Failure to obey the following precautions may result in injury or death:

- Use the hoisting grip to hoist one cable only. Attempting to hoist more than one cable may cause the hoisting grip to break or the cables to fall.
- Do not use the hoisting grip for lowering cable unless the clamp is securely in place.
- Maintain tension on the hoisting grip during hoisting. Loss of tension can cause dangerous movement of the cable and result in injury or death to personnel.
- Do not release tension on the grip until after the grip handle has been fastened to the supporting structure.
- Do not apply any strain to the RJ45 connectors.

Caution

Do not lay the drop cable alongside a lightning air terminal.

1. Hoist the top end of the main drop cable up to the top LPU, following the hoist manufacturer's instructions. When the cable is in position, fasten the grip handle to the supporting structure and remove the hoist line.
2. Connect the main drop cable to the top LPU by following the procedure Connect the drop cable to the ODU (PSU port) and LPU on page 5-13.
3. Run the main drop cable to the site of the bottom LPU.
4. Attach the main drop cable to the supporting structure using site approved methods.

Ground the main drop cable

At all required grounding points, connect the screen of the main drop cable to the metal of the supporting structure using the cable grounding kit (Cambium part number 01010419001).

Install the bottom LPU to PSU drop cable

Install the bottom LPU

Install the bottom LPU, ground it, and connect it to the main drop cable.

1 Select a mounting point for the bottom LPU within 600 mm (24 in) of the building entry point. Mount the LPU vertically with cable glands facing downwards.

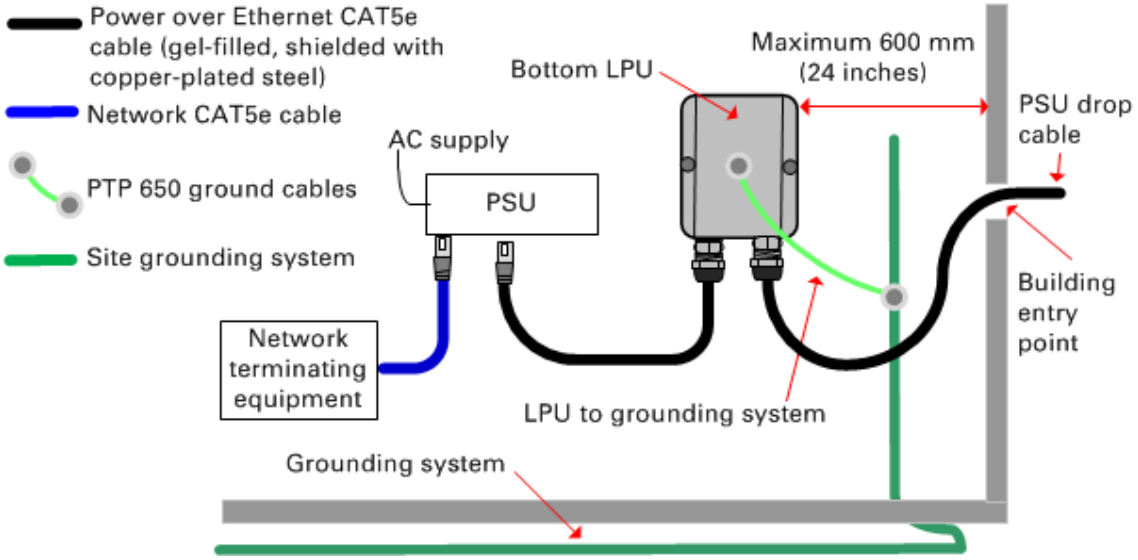

2 Connect the main drop cable to the bottom LPU by following the procedure Connect the drop cable to the ODU (PSU port) and LPU on page 5-13.

3 Fasten one ground cable to the bottom LPU using the M6 (small) lug. Tighten both nuts to a torque of 5 Nm (3.9 lb ft):

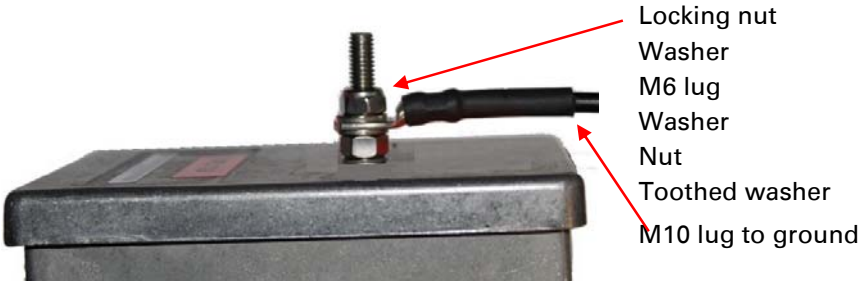

4 Select a building grounding point near the LPU bracket. Remove paint from the surface and apply anti-oxidant compound. Fasten the LPU ground cable using the M10 (large) lug.

Install the LPU to PSU drop cable

Use this procedure to terminate the bottom LPU to PSU drop cable with RJ45 connectors at both ends, and with a cable gland at the LPU end.

Warning

The metal screen of the drop cable is very sharp and may cause personal injury. ALWAYS wear cut-resistant gloves (check the label to ensure they are cut resistant). ALWAYS wear protective eyewear. ALWAYS use a rotary blade tool to strip the cable, not a bladed knife.

Caution

Check that the crimp tool matches the RJ45 connector, otherwise the cable or connector may be damaged.

1 Cut the drop cable to the length required from bottom LPU to PSU.

2 **At the LPU end only**:

- Fit one cable gland and one RJ45 connector by following the procedure Terminate with RJ45 connectors and glands on page 5-15.
- Connect this cable and gland to the bottom LPU by following the procedure Connect the drop cable to the ODU (PSU port) and LPU on page 5-13.

4 **At the PSU end only**: Do not fit a cable gland. Strip the cable outer sheath and fit the RJ45 connector load bar. Fit the RJ45 connector housing. To ensure there is effective strain relief, locate the cable inner sheath under the connector housing tang:

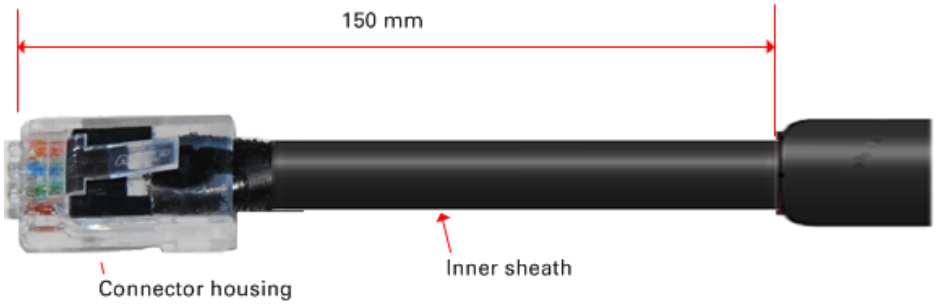

Test resistance in the drop cable

Test that the resistances between pins are within the correct limits, as specified in the table below. If any of the tests fail, examine the drop cable for wiring faults.

Connection to a terminated cable can be achieved reliably by use of a suitable cable adaptor. One example is the Modapt adaptor manufactured by The Siemon Company.

Cable length		Maximum Resistance (Ohm) between RJ45 pins		
Ft	m	1 & 2, 3 & 6, 4 & 5, 7 & 8	1 & 3	4 & 7
0	0	0.8	1	1.6
33	10	2.5	2.7	3.3
66	20	4.2	4.4	5

88	30	5.9	6.1	6.7
131	40	7.6	7.8	8.4
164	50	9.3	9.5	10.1
197	60	11	11.2	11.8
230	70	12.7	12.9	13.5
262	80	14.4	14.6	15.2
295	90	16.1	16.3	16.9
328	100	17.8	18	18.6
656	200	34.8	35	35.6
984	300	51.8	52	52.6

Minimum Resistance (Ohm) between Adaptor pins		
1 & Screen	**8 & Screen**	**1 & 7**
> 100 K	> 100 K	> 2 K

Note

A resistance of 20 Ohms is the maximum allowed when the cable is carrying Ethernet. A resistance of 60 Ohms is the maximum allowed when the cable is carrying only power to the ODU (when Ethernet is carried by one of the other ODU interfaces).

Note

Ensure that these resistances are within 10% of each other by multiplying the lowest resistance by 1. If any of the other resistances are greater than this, the test has failed.

Installing the PSU

Install one of the following types of PSU (as specified in the installation plan):

- PTP 550 AC Power Injector (Cambium part number N000000L034A). Refer to Installing the AC Power Injector on page 5-20.
- AC+DC Enhanced Power Injector (Cambium part number C000065L002). Refer to Installing the AC+DC Enhanced Power Injector on page 5-21.

Warning

Always use an appropriately rated and approved AC supply cord-set in accordance with the regulations of the country of use.

Caution

As the PSU is not waterproof, locate it away from sources of moisture, either in the equipment building or in a ventilated moisture-proof enclosure. Do not locate the PSU in a position where it may exceed its temperature rating.

Caution

Do not plug any device other than a PTP 550 ODU into the ODU port of the PSU. Other devices may be damaged due to the non-standard techniques employed to inject DC power into the Ethernet connection between the PSU and the ODU.

Do not plug any device other than a Cambium PTP 550 PSU into the PSU port of the ODU. Plugging any other device into the PSU port of the ODU may damage the ODU and device.

Installing the AC Power Injector

Follow this procedure to install the AC Power Injector (Cambium part number N000000L034A):

1. Form a drip loop on the PSU end of the LPU to PSU drop cable. The drip loop ensures that any moisture that runs down the cable cannot enter the PSU.
2. (a) Place the AC Power Injector on a horizontal surface. Plug the LPU to PSU drop cable into the PSU port labeled ODU. (b) When the system is ready for network connection, connect the network Cat5e cable to the LAN port of the PSU:

(a)

(b)

Installing the AC+DC Enhanced Power Injector

Follow this procedure to install the AC+DC Enhanced Power Injector (Cambium part number C000065L002):

1 Mount the AC+DC power injector by screwing it to a vertical or horizontal surface using the four screw holes (circled):

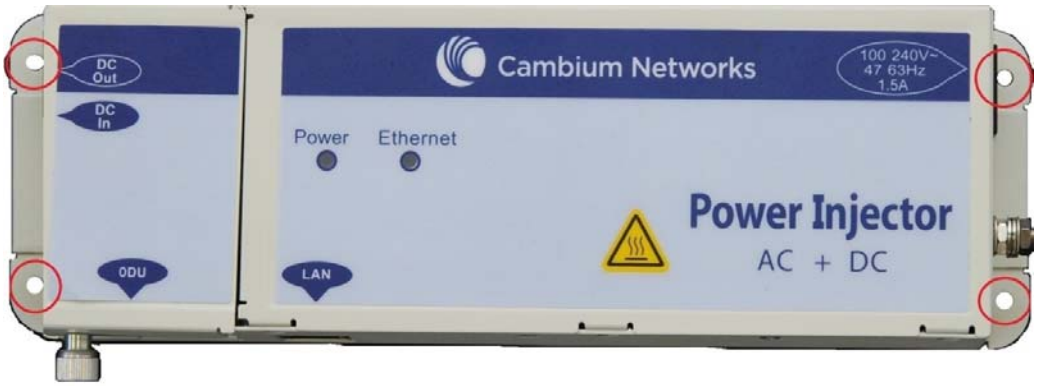

2 Form a drip loop on the PSU end of the LPU to PSU drop cable. The drip loop ensures that any moisture that runs down the cable into the cabinet or enclosure cannot enter the PSU.

3 (a) Undo the retaining screw, hinge back the cover and plug the drop cable into the port. (b) Close the cover and secure with the screw. (c) When the system is ready for network connection, connect the network Cat5e cable to the LAN port of the PSU:

(a)

(b) and (c)

Installing an SFP Ethernet interface

In more advanced configurations, there may be an optical or copper Cat5e Ethernet interface connected to the SFP port of the ODU. Refer to Typical deployment on page 3-34 for diagrams of these configurations.

Adapt the installation procedures in this chapter as appropriate for SFP interfaces, noting the following differences from a PSU interface:

- Install an optical or copper SFP module in the ODU (SFP port) and connect the SFP optical or copper cable into this module using the long cable gland from the SFP module kit. This is described in the following procedures:
  - Fitting the long cable gland on page 5-24
  - Inserting the SFP module on page 5-25
  - Connecting the cable on page 5-27
  - Fitting the gland on page 5-28
  - Removing the cable and SFP module on page 5-30
- Optical cables do not require LPUs or ground cables.
- At the remote end of an SFP drop cable, use an appropriate termination for the connected device.
- If the connected device is outdoors, not in the equipment building or cabinet, adapt the grounding instructions as appropriate.
- PTP 550 LPUs are not suitable for installation on SFP copper Cat5e interfaces. For SFP drop cables, obtain suitable surge protectors from a specialist supplier.
- Ground the top LPUs and surge protector to the same point on the ODU (Figure 33).

Figure 33 ODU with copper Cat5e connections to both Ethernet ports

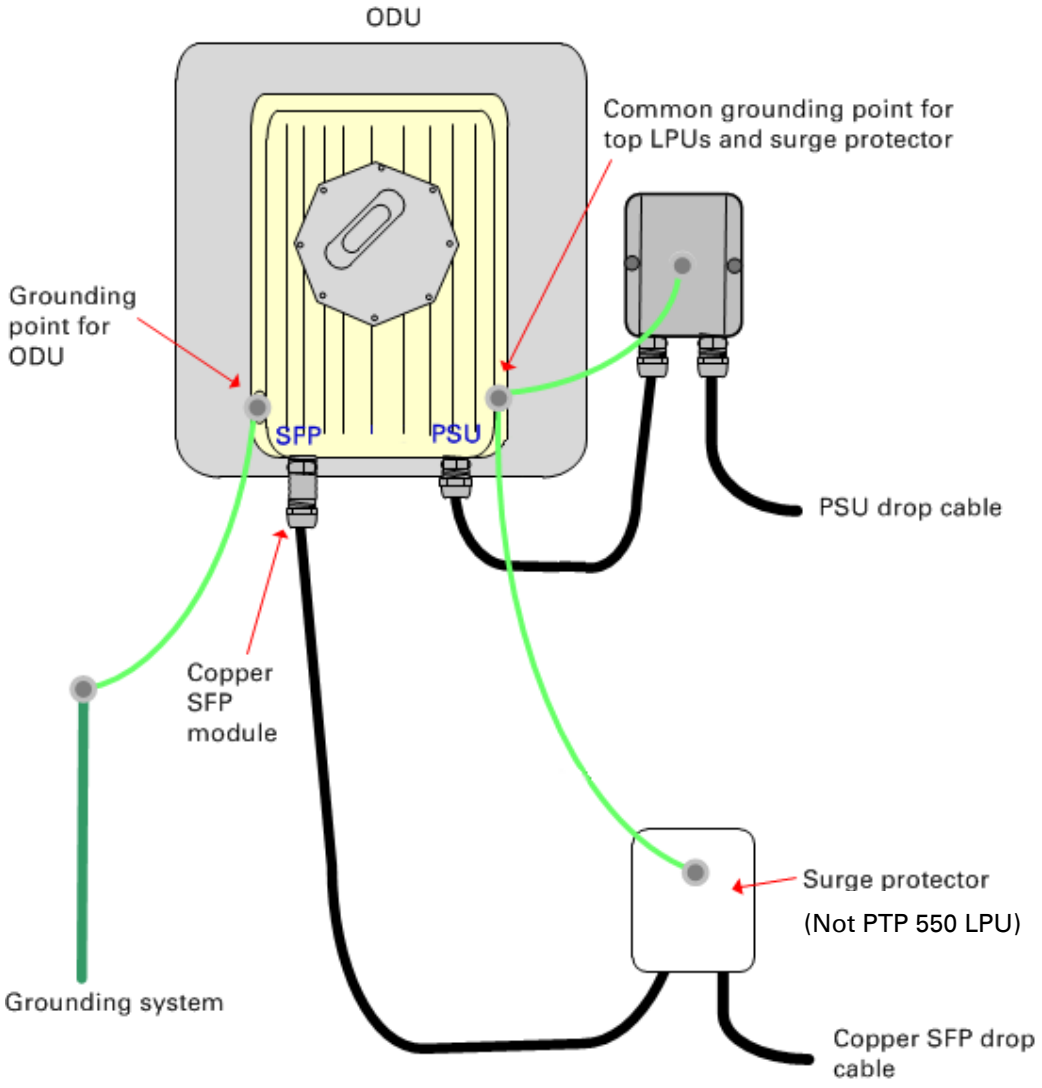

Fitting the long cable gland

Optical SFP interface: Disassemble the long cable gland and thread its components over the LC connector at the ODU end as shown below.

Copper Cat5e SFP interface: Disassemble the long cable gland and thread its components over the RJ45 connector at the ODU end as shown below.

1 Disassemble the gland:

2 Thread each part onto the cable (the rubber bung is split):

3 Assemble the spring clip and the rubber bung (the clips go inside the ring):

4 Fit the parts into the body and lightly screw on the gland nut (do not tighten it):

Optical

Copper

Inserting the SFP module

To insert the SFP module into the ODU, proceed as follows:

1 Remove the blanking plug from the SFP port of the ODU:

2 Insert the SFP module into the SFP receptacle with the label up:

Optical

Copper

3 Push the module home until it clicks into place:

Optical

Copper

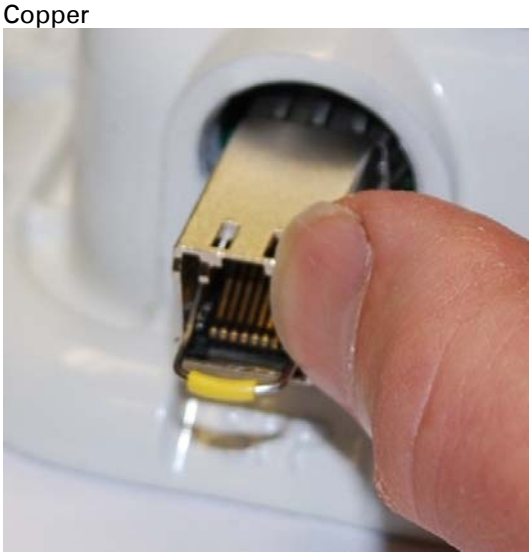

4 Rotate the latch to the locked position:

Optical

Copper

Connecting the cable

Caution

The fiber optic cable assembly is very delicate. To avoid damage, handle it with extreme care. Ensure that the fiber optic cable does not twist during assembly, especially when fitting and tightening the weatherproofing gland.

Do not insert the power over Ethernet drop cable from the PSU into the SFP module, as this will damage the module.

1 Remove the LC connector dust caps from the ODU end (optical cable only):

2 Plug the connector into the SFP module, ensuring that it snaps home:

Optical

Copper

Fitting the gland

1 Fit the gland body to the SFP port and tighten it to a torque of 5.5 Nm (4.3 lb ft)

2 Fit the gland nut and tighten until the rubber seal closes on the cable. Do not over-tighten the gland nut, as there is a risk of damage to its internal components:

Correct
Incorrect

Removing the cable and SFP module

Do not attempt to remove the module without disconnecting the cable, otherwise the locking mechanism in the ODU will be damaged.

1 Remove the cable connector by pressing its release tab before pulling it out:

Optical

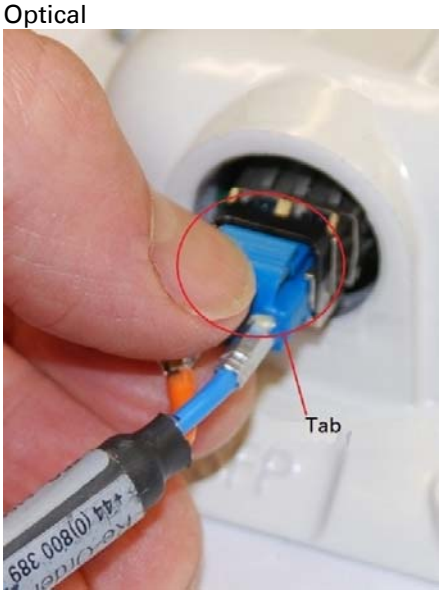

Copper

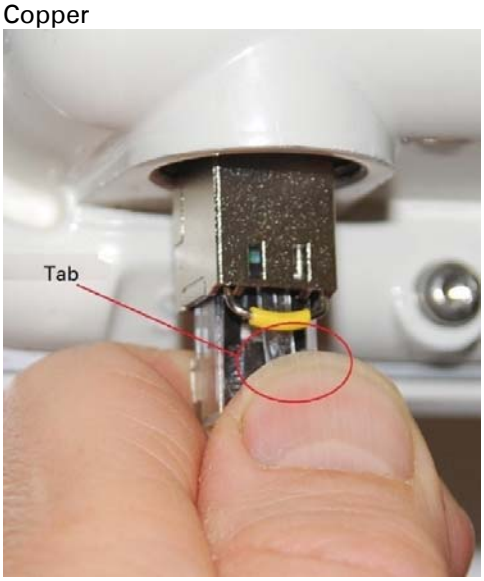

2 Rotate the latch to the unlocked position. Extract the module by using a screwdriver:

Optical

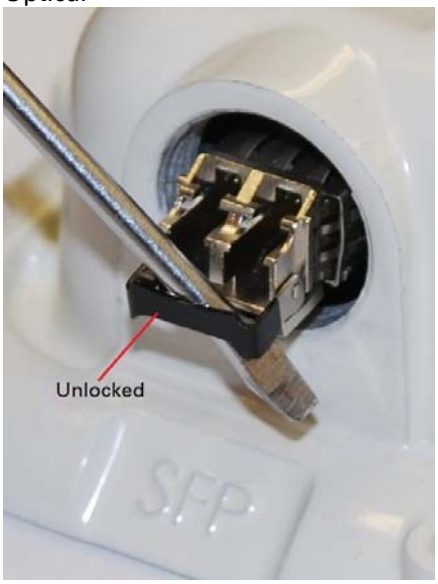

Copper

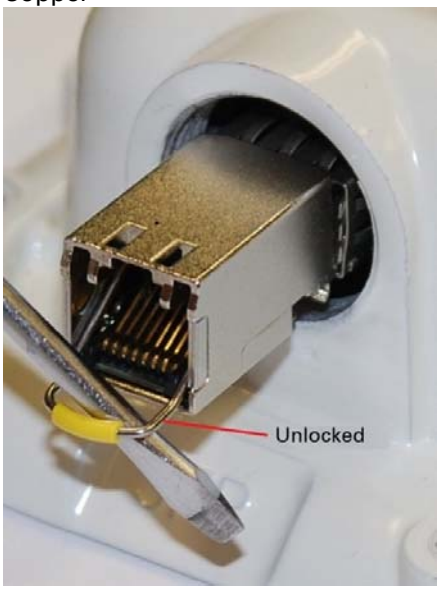

Supplemental installation information

This section contains detailed installation procedures that are not included in the above topics, such as how to strip cables, create grounding points and weatherproof connectors.

Stripping drop cable

When preparing drop cable for connection to the PTP 550 ODU or LPU, use the following measurements:

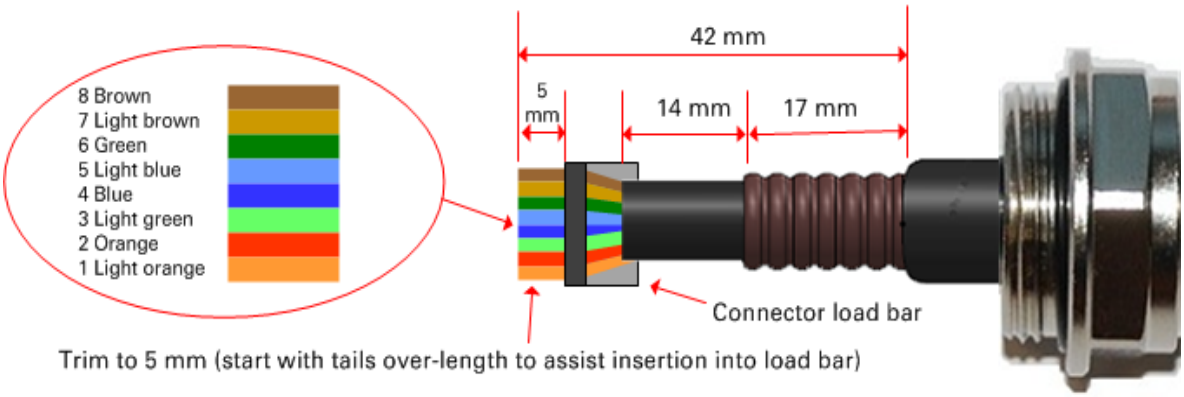

When preparing drop cable for connection to the PTP 550 PSU (without a cable gland), use the following measurements:

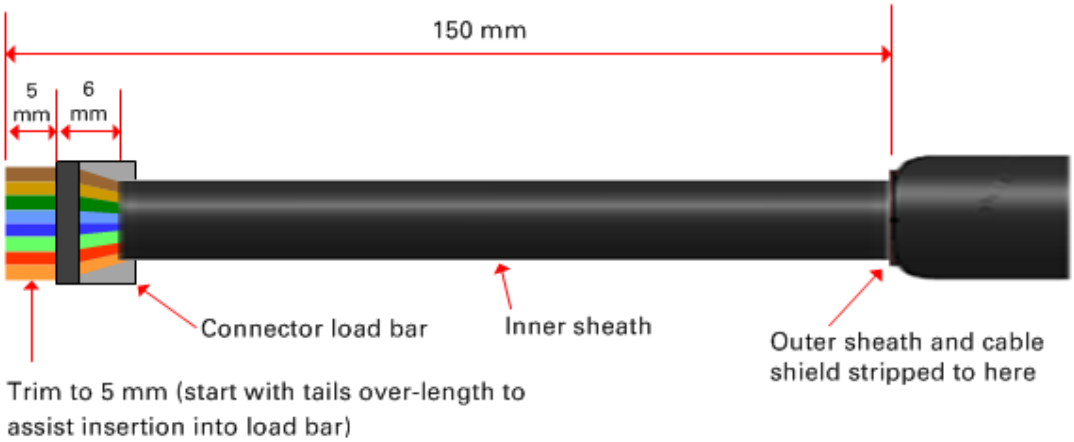

Creating a drop cable grounding point

Use this procedure to connect the screen of the main drop cable to the metal of the supporting structure using the cable grounding kit (Cambium part number 01010419001).

To identify suitable grounding points, refer to Drop cable grounding points on page 3-43.

1 Remove 60 mm (2.5 inches) of the drop cable outer sheath.

2 Cut 38mm (1.5 inches) of rubber tape (self-amalgamating) and fit to the ground cable lug. Wrap the tape completely around the lug and cable.

3 Fold the ground wire strap around the drop cable screen and fit cable ties.

4 Tighten the cable ties with pliers. Cut the surplus from the cable ties.

5 Cut a 38mm (1.5 inches) section of self-amalgamating tape and wrap it completely around the joint between the drop and ground cables.

6 Use the remainder of the self-amalgamating tape to wrap the complete assembly. Press the tape edges together so that there are no gaps.

7 Wrap a layer of PVC tape from bottom to top, starting from 25 mm (1 inch) below and finishing 25 mm (1 inch) above the edge of the self-amalgamating tape, over lapping at half width.

8 Repeat with a further four layers of PVC tape, always overlapping at half width. Wrap the layers in alternate directions (top to bottom, then bottom to top). The edges of each layer should be 25mm (1 inch) above (A) and 25 mm (1 inch) below (B) the previous layer.

9 Prepare the metal grounding point of the supporting structure to provide a good electrical contact with the grounding cable clamp. Remove paint, grease or dirt, if present. Apply anti-oxidant compound liberally between the two metals.

10 Clamp the bottom lug of the grounding cable to the supporting structure using site approved methods. Use a two-hole lug secured with fasteners in both holes. This provides better protection than a single-hole lug.

Weatherproofing an N type connector

Use this procedure to weatherproof the N type connectors fitted to the connectorized ODU and external antenna (if recommended by the antenna manufacturer).

1 Ensure the connection is tight. A torque wrench should be used if available:

2 Wrap the connection with a layer of 19 mm (0.75 inch) PVC tape, starting 25 mm (1 inch) below the connector body. Overlap the tape to half-width and extend the wrapping to the body of the LPU. Avoid making creases or wrinkles:

3 Smooth the tape edges:

4 Cut a 125mm (5 inches) length of rubber tape (self-amalgamating):

5 Expand the width of the tape by stretching it so that it will wrap completely around the connector and cable:

6 Press the tape edges together so that there are no gaps. The tape should extend 25 mm (1 inch) beyond the PVC tape:

7 Wrap a layer of 50 mm (2 inch) PVC tape from bottom to top, starting from 25 mm (1 inch) below the edge of the self-amalgamating tape, overlapping at half width.

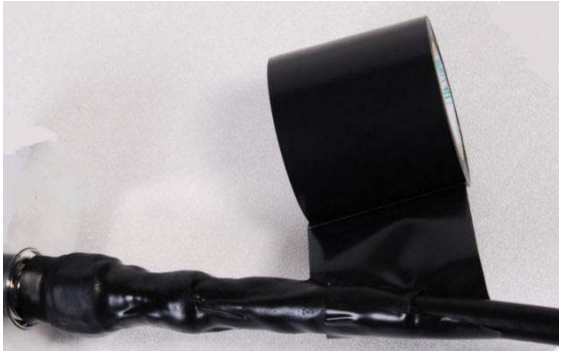

8 Repeat with a further four layers of 19 mm (0.75 inch) PVC tape, always overlapping at half width. Wrap the layers in alternate directions:

- Second layer: top to bottom.
- Third layer: bottom to top.
- Fourth layer: top to bottom.
- Fifth layer: bottom to top.

The bottom edge of each layer should be 25 mm (1 inch) below the previous layer.

9 Check the completed weatherproof connection:

Replacing PSU fuses

The AC+ DC Enhanced Power Injector contains two replaceable fuses. These fuses protect the positive and negative grounded DC input voltages. If an incorrect power supply (that is, not in the range 37V to 60V DC) is connected to the DC input terminals, one or both fuses may blow.

Both fuses are 3 Amp slow-blow, for example Littlefuse part number 0229003.

To replace these fuses, undo the retaining screw and hinge back the cover as indicated:

Note

No other fuses are replaceable in the AC+DC Enhanced Power Injector.

Note

The AC Power Injector does not contain replaceable fuses.

Chapter 6: Configuration and alignment

This chapter describes how to use the web interface to configure the PTP 550 link. It also describes how to align antennas. This chapter contains the following topics:

- Preparing for configuration and alignment on page 6-2
- Connecting to the unit on page 6-4
- Using the web interface on page 6-6
- Other configuration tasks on page 6-8

Preparing for configuration and alignment

This section describes the checks to be performed before proceeding with unit configuration and antenna alignment.

Safety precautions

All national and local safety standards must be followed while configuring the units and aligning the antennas.

Warning

Ensure that personnel are not exposed to unsafe levels of RF energy. The units start to radiate RF energy as soon as they are powered up. Respect the safety standards defined in Compliance with safety standards on page 4-115, in particular the minimum separation distances.

Observe the following guidelines:

- Never work in front of the antenna when the ODU is powered.
- Always power down the PSU before connecting or disconnecting the drop cable from the PSU, ODU or LPU.

Regulatory compliance

All applicable radio regulations must be followed while configuring the units and aligning the antennas. For more information, refer to Compliance with radio regulations on page 4-120.

Caution

If the system designer has provided a list of channels to be barred for TDWR radar avoidance, the affected channels must be barred before the units are allowed to radiate on site, otherwise the regulations will be infringed.

Attention

Si le concepteur du système a fourni une liste de canaux à interdire pour éviter les radars TDWR, les cannaux concernées doivent être interdits avant que les unités sont autorisées à émettre sur le site, sinon la réglementation peut être enfreinte.

Selecting configuration options

Use the installation report to determine which configuration options are required. Refer to LINKPlanner on page 3-52.

Generating license keys

To obtain License Keys for operation in a specific country/region that are not factory-installed, proceed as follows:

1. Obtain the MAC Address of the ODU (it is on the System Status page).
2. Go to the Cambium Support web page (see Contacting Cambium Networks on page 1) and navigate to the **Cambium Networks License Key Generator**.
3. Enter the MAC Address and Access Key.
4. Select the country of operation for the link. The list of available countries depends on the regional variant; not all countries are available in all variants. The generated license will automatically include all of the regulatory bands approved for that country.
5. Submit the web form. Cambium will send the License Key by email.

Use the Software License Management page to configure the ODU with new license keys.

Connecting to the unit

This section describes how to connect the unit to a management PC and power it up.

Configuring the management PC

Use this procedure to configure the local management PC to communicate with the PTP 550.

Procedure:

1 Select **Properties** for the Ethernet port. In Windows 7 this is found in **Control Panel > Network and Internet > Network Connections > Local Area Connection**.

2 Select **Internet Protocol (TCP/IP)**:

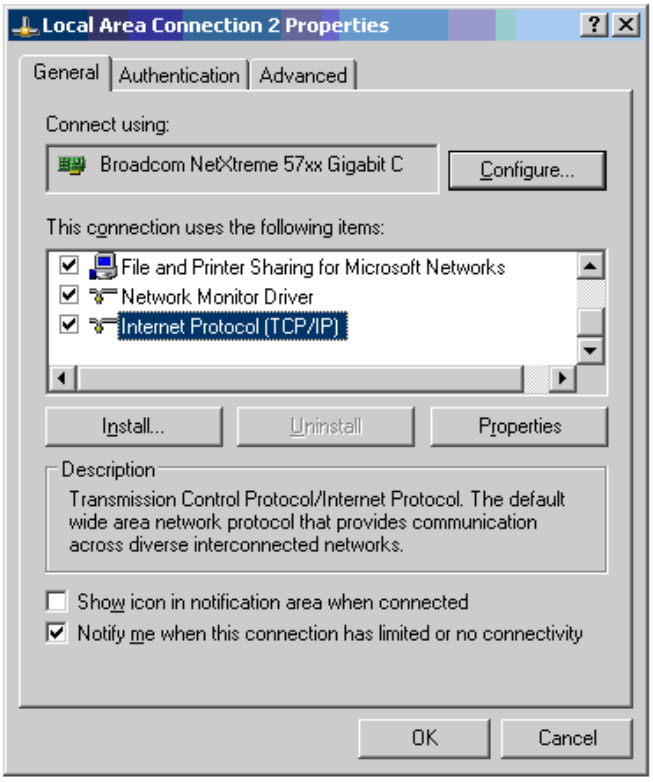

3 Click **Properties**.

4 Enter an IP address that is valid for the 169.254.X.X network, avoiding 169.254.0.0 and 169.254.1.1. A good example is 169.254.1.3:

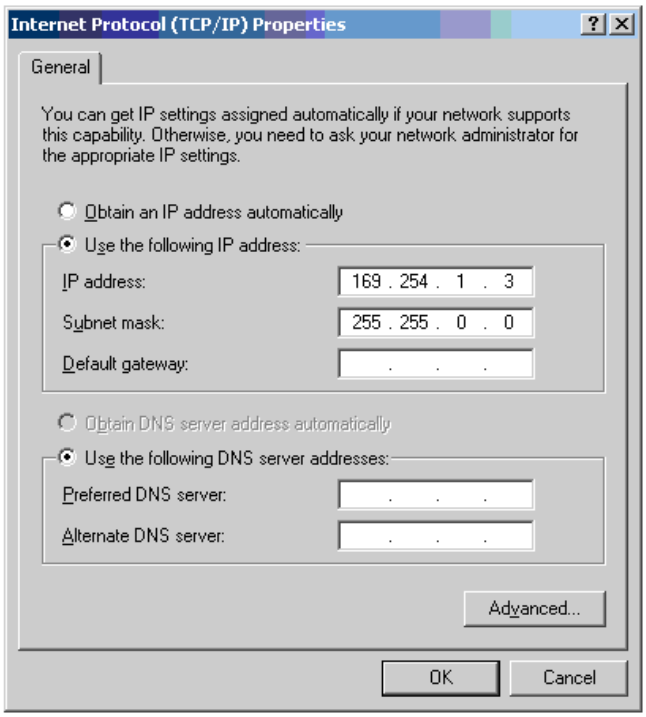

5 Enter a subnet mask of 255.255.0.0. Leave the default gateway blank.

Connecting to the PC and powering up

Use this procedure to connect a management PC and power up the PTP 550.

Procedure:

1 Check that the ODU and PSU are correctly connected.

2 Connect the PC Ethernet port to the LAN port of the PSU using a standard (not crossed) Ethernet cable.

3 Apply mains or battery power to the PSU. The green Power LED should illuminate continuously.

4 After about 45 seconds, check that the orange Ethernet LED starts with 10 slow flashes.

5 Check that the Ethernet LED then illuminates continuously. If the Power and Ethernet LEDs do not illuminate correctly, refer to Testing hardware on page 7-13.

Using the web interface

This section describes how to log into the PTP 550 web interface and use its menus.

Logging into the web interface

Use this procedure to log into the web interface as a system administrator.

Procedure:

1 Start the web browser from the management PC.

2 Type the IP address of the unit into the address bar. The factory default IP address is **169.254.1.1**. Press ENTER. The login prompt is displayed:

3 Enter Username: admin and Password: admin then click **Log In**. The **System Status** page is displayed:

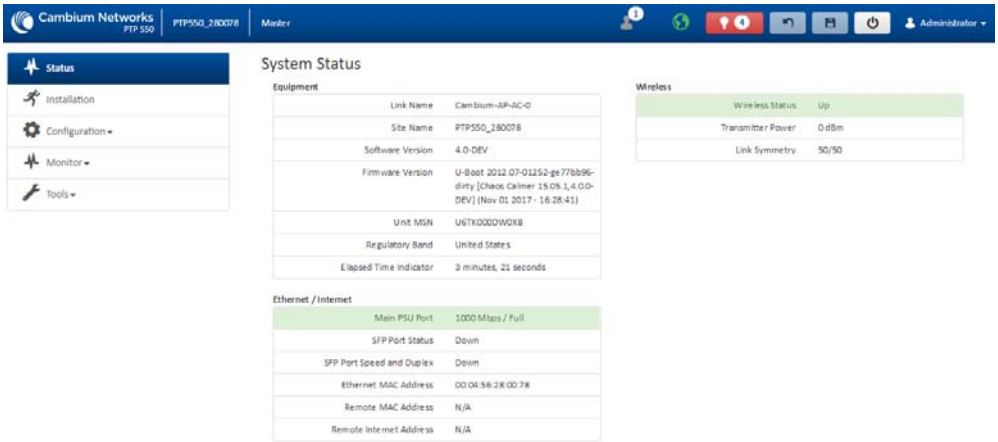

Using the menu options

Use the menu navigation bar in the left panel to navigate to each web page. Some of the menu options are only displayed for specific system configurations. Use Table 48 to locate information about using each web page.

Table 48 Menu options and web pages

Main menu	Menu option	Web page information
Status		
Installation		
Configuration		
	Radio	
	System	
	Network	
	Security	
Monitor		
	Performance	
	System	
	Wireless	
	Throughput Chart	
	Network	
	System Log	
Tools		
	Software Upgrade	
	Backup / Restore	
	Spectrum Analyzer	
	eAlign	
	Wireless Link Test	
	Ping	
	Traceroute	

Other configuration tasks

This section describes other configuration tasks.

Connecting to the network

Use this procedure to complete and test network connections.

Procedure:

1. If a management PC is connected directly to the PTP 550, disconnect it.
2. Confirm that all ODU Ethernet interface cables (PSU, SFP) are connected to the correct network terminating equipment or devices.
3. Test that the unit is reachable from the network management system by opening the web interface to the management agent, or by requesting ICMP echo response packets using the Ping application. For in-band management, test that both units are reachable from one PC.

   If the network management system is remote from the sites, either ask co-workers at the management center to perform this test, or use remote login to the management system.
4. Test the data network for correct operation across the wireless link. This may be by requesting ICMP echo response packets between hosts in the connected network segments, or by some more structured use of network testing tools.
5. Monitor the Ethernet ports and wireless link to confirm that they are running normally.

Chapter 7: Operation and Troubleshooting

This chapter provides instructions for operators of PTP 550 networks. The following topics are described:

- General Planning for Troubleshooting on page 7-10
- Upgrading device software on page 7-12
- Testing hardware on page 7-13
- Troubleshooting the radio link on page 7-16
- Using the device external reset button on page 7-18
- Resetting ODU to factory defaults by power cycling on page 7-19

General Planning for Troubleshooting

Effective troubleshooting depends in part on measures that you take before you experience trouble in your network. Cambium recommends the following measures for each site:

Procedure:

1. Identify troubleshooting tools that are available at your site (such as a protocol analyzer).
2. Identify commands and other sources that can capture baseline data for the site. These may include:
   - Ping
   - tracert or traceroute
   - Throughput Test results
   - Throughput data
   - Configure GUI page captures
   - Monitor GUI page captures
   - Session logs
3. Start a log for the site, including:
   - Operating procedures
   - Site-specific configuration records
   - Network topology
   - Software releases
   - Types of hardware deployed
   - Site-specific troubleshooting process
   - Escalation procedures
   - GPS latitude/longitude of each network element

General Fault Isolation Process

Effective troubleshooting also requires an effective fault isolation methodology that includes

- Attempting to isolate the problem to the level of a system, subsystem, or link, such as
  - BHM to BHS
  - BHM to CMM
  - CMM to GPS
  - power
- Researching System Logs of the involved equipment.
- Answering the questions listed in the following section.
- Reversing the last previous corrective attempt before proceeding to the next.
- Performing only one corrective attempt at a time.

Questions to Help Isolate the Problem

When a problem occurs, attempt to answer the following questions:

1. What is the history of the problem?
   - Have we changed something recently?
   - Have we seen other symptoms before this?
2. How wide-spread is the symptom?
3. Based on data in the System Log
   - Is intermittent connectivity indicated? (If so, verify your configuration, power level, CINR, cables and connections, and the speed duplex of both ends of the link).
   - Does the problem correlate to loss-of-sync events?
4. Are connections made via *shielded* cables?
5. Does the GPS antenna have an *unobstructed* view of the entire horizon?

Upgrading device software

To take advantage of new features and software improvements for the PTP 550 system, monitor the Cambium Networks Software website:

http://support.cambiumnetworks.com

To upgrade the device software:

Procedure:

1. Log in to the device GUI via the management IP
2. Navigate to page **Tools**, **Software Upgrade**
3. Under the **Main Software** section, set the **Upgrade Option** to **URL** to pull the software file from a network software server or select **Local File** to upload a file from the accessing device.
   If **URL** is selected, enter the server IP address, Server Port, and File path.

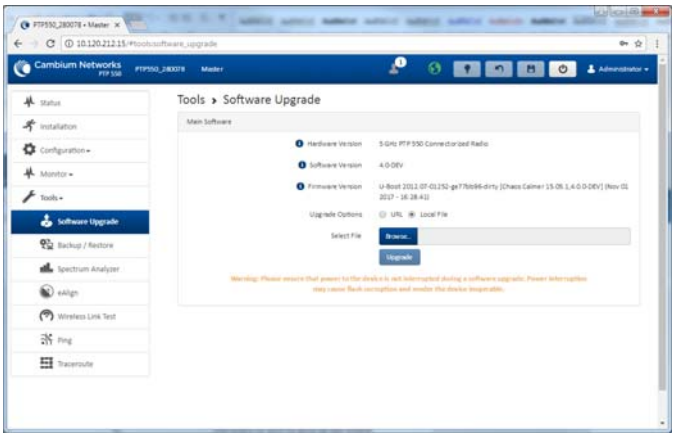

4. If **Local File** is selected, click **Browse** to launch the file selection dialogue
5. Click **Upgrade**

   Caution

   Do not power off the unit in the middle of a software upgrade.

6. Once the software upgrade is complete, click the **Reset** icon.

Testing hardware

This section describes how to test the hardware when it fails on startup or during operation.

Before testing hardware, confirm that all outdoor cables, that is those that connect the ODU to equipment inside the building, are of the supported type, as defined in Ethernet cabling on page 2-25

Checking the power supply LED

When the power supply is connected to the main power supply, the expected LED behavior is:

- The Power (green) LED illuminates steadily.

If the expected LED operation does not occur, or if a fault is suspected in the hardware, check the LED states and choose the correct test procedure:

- Power LED is off on page 7-13
- Ethernet LED is off on page 7-13

Power LED is off

Meaning: Either the power supply is not receiving power from the AC/DC outlet, or there is a wiring fault in the unit.

Action: Remove the Ethernet cable from the PSU and observe the effect on the Power LED. If the Power LED does not illuminate, confirm that the mains power supply is working, for example, check the plug. If the power supply is working, report a suspected power supply fault to Cambium Networks.

Ethernet LED is off

Meaning: There is no Ethernet traffic between the device and power supply.

Action: The fault may be in the LAN or device cable:

- Remove the LAN cable from the power supply, examine it and confirm it is not faulty.
- If the PC connection is working, remove the device cable from the power supply, examine it, and check that the wiring to pins 1&2 and 3&6 is correct and not crossed.

Test Ethernet packet errors reported by ODU

Log into the device and click **Monitor**, **Performance**. Click **Reset System Counters** at the bottom of the page and wait until **LAN RX – Total Packet Counter** has reached 1 million. If the counter does not increment or increments too slowly, because for example the system is newly installed and there is no offered Ethernet traffic, then abandon this procedure and consider using the procedure Test ping packet loss on page 7-14.

Check the **LAN RX – Error Packet Counter** statistic. The test has passed if this is less than 10.

Test Ethernet packet errors reported by managed switch or router

If the device is connected to a managed Ethernet switch or router, it may be possible to monitor the error rate of Ethernet packets. Please refer to the user guide of the managed network equipment. The test has passed if the rate of packet errors reported by the managed Ethernet switch or router is less than 10 in 1 million packets.

Test ping packet loss

Using a computer, it is possible to generate and monitor packets lost between the power supply and the device. This can be achieved by executing the Command Prompt application which is supplied as standard with Windows and Mac operating systems.

Caution

This procedure disrupts network traffic carried by the AP or SM under test.

Procedure:

1. Ensure that the IP address of the computer is configured appropriately for connection to the ODU under test, and does not conflict with other devices connected to the network.
2. If the power supply is connected to an Ethernet switch or router then connect the computer to a spare port, if available.
3. If it is not possible to connect the computer to a spare port of an Ethernet switch or router, then the power supply must be disconnected from the network in order to execute this test:
   - Disconnect the power supply from the network.
   - Connect the computer directly to the LAN port of the power supply.
4. On the computer, open the Command Prompt application.
5. Send 1000 ping packets of length 1500 bytes. The process will take 1000 seconds, which is approximately 17 minutes.

   If the computer is running a Windows operating system, this is achieved by typing (for an IPv6 address, use the ping6 command):

   ping –n 1000 –l 1500 <ipaddress>

   where <ipaddress> is the IP address of the AP or SM under test.

   If the computer is running a MAC operating system, this is achieved by typing:

   ping –c 1000 –s 1492 <ipaddress>

   where <ipaddress> is the IP address of the ODU under test.

6. Record how many Ping packets are lost. This is reported by Command Prompt on completion of the test.

   The test has passed if the number of lost packets is less than 2.

Troubleshooting the radio link

This section describes how to test the link when there is no radio communication, when it is unreliable, or when the data throughput rate is too low. It may be necessary to test ODUs at both ends of the link.

Module has lost or does not establish radio connectivity

If there is no wireless activity, follow this:

Procedure:

1. Check that the ODUs are configured with the same **Frequency Carrier**. Also, if operating in a region where DFS is required, ensure that the SM's **Frequency Carrier List** contains the frequencies configured in the AP's **DFS Alternate Frequency Carrier 1** and **DFS Alternate Frequency Carrier 2** fields.
2. Check that the **Channel Bandwidth** is configured the same at the ODUs.
3. Check that the ODU **Synchronization Source** is configured properly based on the network configuration.
4. Verify the authentication settings on the ODU. if **Authentication Type** is set to **WPA2**, verify that the **Pre-shared Key** matches between the ODUs.
5. Check that the software at each end of the link is the same version.
6. Check that the desired Master ODU SSID is configured in the Slave **Preferred Masters List**.
7. On the Slave ODU, check the **DL RSSI** and **DL CINR** values. Verify that for the ODU installed distance, that the values are consistent with the values reported by the LINKPlanner tool.
8. Check Tx Power on the ODUs
9. Check that the link is not obstructed or the ODUs misaligned.
10. Check the DFS status page (**Monitor**, **System Status**) at each end of the link and establish that there is a quiet wireless channel to use.
11. If there are no faults found in the configuration and there is absolutely no wireless signal, retry the installation procedure.
12. If this does not work then report a suspected ODU fault to Cambium Networks.

Link is unreliable or does not achieve data rates required

If there is some activity but the link is unreliable or does not achieve the data rates required, proceed as follows:

Procedure:

1. Check that the interference has not increased by monitoring the uplink and downlink CINR values reported in the ODU page **Monitor**, **Wireless Status**
2. Check that the RSSI values reported at the ODU are proper based on the distance of the link – the LINKPlanner tool is designed to estimate these values.
3. Check that the path loss is low enough for the communication rates required.
4. Check that the ODU has not become misaligned.
5. Review your Quality of Service configuration and ensure that traffic is properly classified and prioritized.

Module Has Lost or Does Not Gain GPS Synchronization

To troubleshoot a loss of sync, perform the following steps.

Procedure:

1. If the ODU is receiving synchronization via CMM, verify that the CMM is properly receiving sync via its attached GPS antenna (see *PMP Synchronization Solutions User Guide*). Verify that the cables from the CMM to the network switch are at most 30 Ft (shielded) or 10 Ft (unshielded) and that the network switch is not PoE (802.3af) capable.
2. If the CMM is receiving GPS synchronization pulses, verify that the ODU **Synchronization Source** is set to **CMM5** and that the ODU GPS status bar icon is lit green.

Using the device external reset button

PTP 550 ODUs feature an external button which serves two purposes:

- To reset the device (briefly depress the button for more than two seconds but less than ten seconds then release)

  Caution

  If the reset button is pressed for more than ten seconds while powered on, the device will reset back to its factory default configuration

- To reset the device to its factory default configuration (depress the button for more than ten seconds then release)

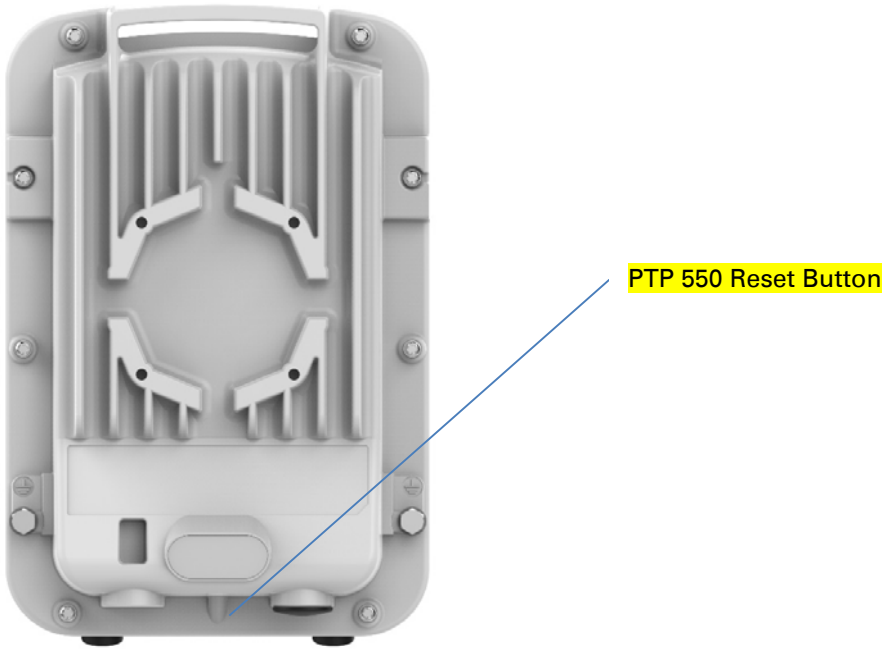

Resetting ODU to factory defaults by power cycling

Operators may reset a PTP 550 radio to default factory configuration by a sequence of power cycling (removing and re-applying power to the device). This procedure allows operators to perform a factory default reset without a tower climb or additional tools. The procedure is depicted in Figure 34.

Procedure:

1. Remove the Ethernet cable from PoE jack of the power supply for at least 10 seconds.
2. Reconnect the Ethernet cable to re-supply power to the ODU for **3-5 seconds** and disconnect cable to power off the ODU for **3-5 seconds**. (1st power cycle)
3. Reconnect the Ethernet cable to re-supply power to the ODU for **3-5 seconds** and disconnect cable to power off the ODU for **3-5 seconds**. (2nd power cycle)
4. Reconnect the Ethernet cable to re-supply power to the ODU for **3-5 seconds** and disconnect cable to power off the ODU for **3-5 seconds**. (3rd power cycle)
5. Reconnect the Ethernet cable to re-supply power to the ODU for **3-5 seconds** and disconnect cable to power off the ODU for **3-5 seconds**. (4th power cycle)
6. Reconnect the Ethernet cable to re-supply power to the ODU for at least **30 seconds** and allow it to go through the boot up procedure (Note: Device will go through an additional reset automatically). This will reset the current configuration files to factory default configuration (e.g. IP addresses, Device mode, RF configuration etc.). The device can be pinged from a PC to check if boot up is complete (Successful ping replies indicates boot up is complete).
7. Access the ODU e using the default IP address of 192.168.0.1.

Figure 34 Power cycle timings

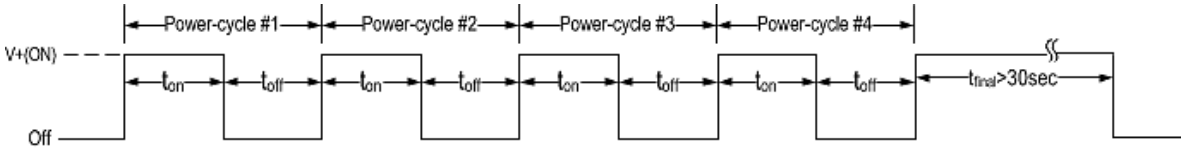

Where:	Is:
V+(ON)	Power through PoE has been applied to the device
Off	Power through PoE has been removed from the device
t_{on}	Time duration for which the device has been powered on. This should be 3-5 seconds.
t_{off}	Time duration for which the device has been powered off. This should be 3-5 seconds.

Glossary

Term	Definition
AES	Advanced Encryption Standard
ANSI	American National Standards Institution
ARP	Address Resolution Protocol
ATPC	Automatic Transmit Power Control
Aux	Auxiliary
BBDR	Broadband Disaster Relief
BPSK	Binary Phase Shift Keying
BW	Bandwidth
CFM	Connection Fault Management
CHAP	Challenge Handshake Authentication Protocol
CSP	Critical Security Parameter
DC	Direct Current
DES	Data Encryption Standard
DFS	Dynamic Frequency Selection
DHCP	Dynamic Host Configuration Protocol
DSCP	Differentiated Services Code Point
DSO	Dynamic Spectrum Optimization
EIRP	Equivalent Isotropic Radiated Power
EMC	Electromagnetic Compatibility
EMD	Electro-Magnetic Discharge
ETSI	European Telecommunications Standards Institute
EU	European Union
FAQ	Frequently Asked Question
FCC	Federal Communications Commission
GE	Gigabit Ethernet
GUI	Graphical User Interface
HTTP	Hypertext Transfer Protocol
IB	In-Band

Term	Definition
IC	Industry Canada
ICMP	Internet Control Message Protocol
ICNIRP	International Commission on Non-Ionizing Radiation Protection
IEEE	Institute of Electrical and Electronic Engineers
IP	Internet Protocol
IPSec	Internet Protocol Security
ISM	Industrial Scientific and Medical
ITPE	Initial Transmit Power Estimate
KDB	Knowledge Database
L2CP	Layer Two Control Protocols
LACP	Link Aggregation Control Protocol
LLDP	Link Layer Discovery Protocol
LAN	Local Area Network
LOS	Line-of-Sight (clear line-of-sight, and Fresnel zone is clear)
LPU	Lightning Protection Unit
MAC	Medium Access Control Layer
MIB	Management Information Base
MIMO	Multiple-Input Multiple-Output
MSTP	Multiple Spanning Tree Protocol
MTU	Maximum Transmission Unit
NA	Neighbor Advertisement
NLOS	Non-Line-of-Sight
NMEA	National Marine Electronics Association
NS	Neighbor Solicitation
NTP	Network Time Protocol
ODU	Outdoor Unit
OFDM	Orthogonal Frequency Division Multiplex
PC	IBM Compatible Personal Computer
PEAP	Protected Extensible Authentication Protocol
PIDU	Powered Indoor Unit
POE	Power over Ethernet
PSU	Power Supply Unit
PTP	Point-to-Point

Term	Definition
QAM	Quadrature Amplitude Modulation
QoS	Quality of Service
QPSK	Quadrature Phase Shift Keying
RADIUS	Remote Authentication Dial-In Service
RAM	Random Access Memory
RF	Radio Frequency
RFC	Request for Comments
RoW	Rest of World
RMA	Return Material Authorization
RSSI	Received Signal Strength Indication
RSTP	Rapid Spanning Tree Protocol
SFP	Small Form-factor Pluggable
SMTP	Simple Mail Transport Protocol
SNMP	Simple Network Management Protocol
STP	Spanning Tree Protocol
Syslog	System Logging
TC	Traffic Class
TCP	Transmission Control Protocol
TDD	Time Division Duplexing
TDWR	Terminal Doppler Weather Radar
TGB	Tower Ground Bus bar
TLS	Transport Layer Security
UNII	Unlicensed National Information Infrastructure
URL	Universal Resource Location
UTC time	Coordinated Universal Time
UTP	Unshielded Twisted Pair
UV	Ultraviolet
VLAN	Virtual Local Area Network
WEEE	Waste Electrical and Electronic Equipment