Cambium Networks™

HARDWARE INSTALLATION GUIDE

Enterprise Wi-Fi Access Point

Reservation of Rights

Cambium reserves the right to make changes to any products described herein to improve reliability, function, or design, and reserves the right to revise this document and to make changes from time to time in content hereof with no obligation to notify any person of revisions or changes. Cambium recommends reviewing the Cambium Networks website for the latest changes and updates to products. Cambium does not assume any liability arising out of the application or use of any product, software, or circuit described herein; neither does it convey license under its patent rights or the rights of others. It is possible that this publication may contain references to, or information about Cambium products (machines and programs), programming, or services that are not announced in your country. Such references or information must not be construed to mean that Cambium intends to announce such Cambium products, programming, or services in your country.

Copyrights

This document, Cambium products, and 3rd Party software products described in this document may include or describe copyrighted Cambium and other 3rd Party supplied computer programs stored in semiconductor memories or other media. Laws in the United States and other countries preserve for Cambium, its licensors, and other 3rd Party supplied software certain exclusive rights for copyrighted material, including the exclusive right to copy, reproduce in any form, distribute and make derivative works of the copyrighted material. Accordingly, any copyrighted material of Cambium, its licensors, or the 3rd Party software supplied material contained in the Cambium products described in this document may not be copied, reproduced, reverse engineered, distributed, merged or modified in any manner without the express written permission of Cambium. Furthermore, the purchase of Cambium products shall not be deemed to grant either directly or by implication, estoppel, or otherwise, any license under the copyrights, patents or patent applications of Cambium or other 3rd Party supplied software, except for the normal non-exclusive, royalty free license to use that arises by operation of law in the sale of a product.

Restrictions

Software and documentation are copyrighted materials. Making unauthorized copies is prohibited by law. No part of the software or documentation may be reproduced, transmitted, transcribed, stored in a retrieval system, or translated into any language or computer language, in any form or by any means, without prior written permission of Cambium.

License Agreements

The software described in this document is the property of Cambium and its licensors. It is furnished by express license agreement only and may be used only in accordance with the terms of such an agreement.

High Risk Materials

Cambium and its supplier(s) specifically disclaim any express or implied warranty of fitness for any high-risk activities or uses of its products including, but not limited to, the operation of nuclear facilities, aircraft navigation or aircraft communication systems, air traffic control, life support, or weapons systems (“High Risk Use”).

This product is not restricted in the EU. Any High Risk is unauthorized, is made at your own risk and you shall be responsible for any and all losses, damage or claims arising out of any High-Risk Use.

© 2022 Cambium Networks Limited. All rights reserved

Contents

Contents 3

Chapter 1: About This User Guide 5

Overview of Cambium Networks products 5

Intended audience 5

Purpose 5

Related documents 6

New hardware platforms 6

Existing hardware platforms 6

Acess Point (AP) management options 7

XMS-Cloud 7

Swift mobile application 8

cnMaestro Essentials and cnMaestro X 8

cnMaestro On-Premises 8

Reporting problems 8

Security advice 8

Safety and regulatory information 9

Human exposure to radio frequency energy 11

USA and Canada specific information 12

Federal Communication Commission interference statement 12

Operation in the USA 12

Operation in Canada 13

Specific expertise and training required for professional installers 14

Avoidance of weather radars 14

Ethernet networking skill 15

Ethernet cabling types 15

Pole or tower mount guidelines 15

Wall mount guidelines 16

Training 17

Power density exposure limit 18
Calculation of power density and distance 18
Calculated distances and power compliance margins 19
Chapter 2: Packaging and Installation of Access Point 21
Unpacking the Access Point 21
Package contents 21
Mounting the device 21
Mounting XV3-8 23
Mounting XE5-8 27
Mounting XV2-2 31
Mounting XV2-2T/XV2-2T1 36
Mounting XE3-4 42
Mounting XE3-4T 45
Mounting XV2-21X 51
Mounting XV2-23T 55
Mounting XV2-22H 58
Cambium Networks 61

Chapter 1: About This User Guide

This chapter describes the following topics:

- Overview of Cambium Network products
- Intended audience
- Purpose
- Related documents
- New hardware platforms
- Existing hardware platforms
- Acess Point (AP) management options
- Reporting problems, security advice and safety and regulatory information
- Human exposure to radio frequency energy
- USA and Canada specific information
- Specific expertise and training required for professional installers
- Avoidance of weather radars
- Ethernet networking skills
- Ethernet cabling types
- Pole or tower mount guidelines
- Wall mount guidelines
- Training
- Power density exposure limit

Overview of Cambium Networks products

This User Guide describes various features supported by Cambium Network's Access Point (AP). It also provides detailed instructions for setting up and configuring the AP.

Intended audience

The guide is intended to assist system designers, system installers, and system administrators.

Purpose

This guide intends to instruct and assist personnel in the operation, installation and maintenance of the Cambium's equipment and ancillary devices. It is recommended that all personnel engaged in such activities must be trained properly.

Cambium Networks disclaims all liability whatsoever, implied or expressed, for any risk of damage, loss or reduction in system performance arising directly or indirectly out of the failure of the customer, or anyone acting on the customer's behalf, to abide by the instructions, system parameters, or recommendations made in this document.

Related documents

Table 1 provides provides support information for the AP (Enterprise Wi-Fi 6 products).

Table 1: Related documents

Document Type	Link for Reference
Enterprise Wi-Fi 6 product details	https://www.cambiumnetworks.com/products/wifi/
Enterprise Wi-Fi 6 AP User Guide (This document)	https://support.cambiumnetworks.com/files
Enterprise Wi-Fi 6 AP Release Notes	https://support.cambiumnetworks.com/files
Software Resources	https://support.cambiumnetworks.com/files
Community	http://community.cambiumnetworks.com/
Support	https://www.cambiumnetworks.com/support/contact-support/
Warranty	https://www.cambiumnetworks.com/support/warranty/
Feedback	For feedback, e-mail to support@cambiumnetworks.com

New hardware platforms

New hardware platforms introduced in Enterprise Wi-Fi 6 Access Points:

Table 2: New hardware platforms

Hardware Platform	Description	Supported Software Version
XE3-4T	2x2:2, 2x2:2 802.11a/b/g/n/ac-wave 2/ax Dual-Radio Indoor Wi-Fi 6 Access Point	System Release 6.5.1 and above

Existing hardware platforms

Table 3 lists the existing hardware platforms in Enterprise Wi-Fi 6 Access Points:.

Table 3: List of existing hardware platforms

Hardware Platfrom	Description	Supported Software Version
XV2-21X	2x2:2, 2x2:2 802.11a/b/g/n/ac-wave 2/ax Dual-Radio Indoor Wi-Fi 6 Access Point	System Release 6.5 and above
XV2-23T	2x2:2, 2x2:2 802.11a/b/g/n/ac-wave 2/ax Dual-Radio Outdoor Wi-Fi 6 Access Point	System Release 6.5 and above
XV2-22H	2x2:2, 2x2:2 802.11a/b/g/n/ac-wave 2/ax Dual-Radio Indoor Wi-Fi 6 Wall-Plate Access Point	System Release 6.5 and above
XE3-4	4x4:4; 2x2:2; 2x2:2 802.11a/b/g/n/ac wave 2/ax Tri-Radio Indoor Wi-Fi 6e Access Point	System Release 6.4 and above

Hardware Platfrom	Description	Supported Software Version
XV3-8	8x8:8, 4x4:4 802.11a/b/g/n/ac wave 2/ax Tri-Radio indoor Access Point	System Release 6.0 and above
XE5-8	XE5-8 Wi-Fi 6E 8x8 Access Point Indoor Tri-band AP with Multi Radio SDR	System Release 6.4.1 and above
XV2-2	2x2:2, 2x2:2 802.11a/b/g/n/ac wave 2/ax Dual-Radio indoor Access Point	System Release 6.1 and above
XV2-2T	2x2:2, 2x2:2 802.11a/b/g/n/ac wave 2/ax Dual-Radio Outdoor Access Point, Omni, PoE out	System Release 6.3.5.1 and above
XV2-2T1	Outdoor Wi-Fi 6 Access point, 2x2 Sector antenna Dual band 802.11ax 2x2, BLE, 2.5GbE	System Release 6.4.1 and above

Acess Point (AP) management options

Table 4: AP management options

Management Option	Description
Standalone	AP can be managed directly from its GUI by selecting the **Configure** tab on the menu, and setting up a wireless LAN.
On-Premises	AP can be onboarded to the cnMaestro network management system.
Cloud	AP can be onboarded to either cnMaestro Cloud or XMS-Cloud at https://cloud.cambiumnetworks.com or https://login.xirrus.com respectively.
Mobile Application	AP can be managed by using the Swift application. To download the Swift application from App Store, scan the QR code and follow instructions.

Note

For cloud and mobile pplication management, please ensure the AP has connectivity to the internet. Connectivity can be verified using tools such as ping from the **Troubleshooting** tab of the AP UI. Connection status can be monitored from the AP dashboard.

XMS-Cloud

1. Copy the Entitlement ID (EID) received via email, then go to support.cambiumnetworks.com > **Licensing** > **Activate Entitlements**.
    a. **New customers**: Create an account and login using the credentials that is sent by email.
    b. **Existing customer**s: Enter EID to activate licenses for new APs.
2. Open XMS-Cloud UI and add AP serial numbers: go to login.xirrus.com > **Access Point** tab.

3. Connect AP to the internet. It appears in the XMS-Cloud console in a few minutes.

> **Note**
>
> XV2-21X and XV2-23T platforms are not supported by XMS-Cloud.

Swift mobile application

1. Download the **Cambium Networks Swift** application from the Google Play Store or Apple App Store.
2. Open Swift app and follow the onscreen instructions.

cnMaestro Essentials and cnMaestro X

1. Go to cloud.cambiumnetworks.com and register as a new user or sign-in with the existing credentials.
2. Create a new cnMaestro account or select an existing account.
3. **To add AP serial numbers**: Go to **cnMaestro Home** > **Onboard Devices** > **Claim Device**.
4. Connect the AP to the internet. It appears in the cnMaestro **Devices** page in a few minutes. Approve the device to finish onboarding.

cnMaestro On-Premises

Consult user documentation to redirect the AP to an on-premises cnMaestro management server.

For support, go to support.cambiumnetworks.com.

> **Note**
>
> Enterprise Wi-Fi 6 AP has a QR code that helps the customer to get to the quick start instructions.

Reporting problems

If any problems are encountered when installing or operating this equipment, follow this procedure to investigate and report:

1. Search this document and the software release notes of supported releases.
2. Visit the Support website: http://www.cambiumnetworks.com/support
3. Ask for assistance from the Cambium product supplier.
4. Gather information from affected units, such as any available diagnostic downloads.
5. Escalate the problem by emailing or telephoning support: https://www.cambiumnetworks.com/support/contact-support/

Security advice

Cambium Network's systems and equipment provide security parameters that can be configured by the operator based on their particular operating environment. Cambium recommends setting and using these parameters following industry recognized security practices. Security aspects to be considered are

protecting the confidentiality, integrity, and availability of information and assets. Assets include the ability to communicate, information about the nature of the communications, and information about the parties involved.

In certain instances, Cambium makes specific recommendations regarding security practices, however the implementation of these recommendations and final responsibility for the security of the system lies with the operator of the system.

Cambium Network's Enterprise AP equipment is shipped with default web management interface login credentials. It is highly recommended that the following default username and password should be modified prior to system installation.

- Username: admin
- Password: admin

Safety and regulatory information

This section describes important safety and regulatory guidelines that must be observed by personnel installing or operating Enterprise Access Point equipment.

Important safety information

Warning

To prevent loss of life or physical injury, observe the safety guidelines in this section.

Power lines

Exercise extreme care when working near power lines.

Working at heights

Exercise extreme care when working at heights.

Grounding and protective earth

Cambium Networks Enterprise Access Point (AP) devices must be properly grounded to protect against lightning. It is the responsibility of the user to install the equipment in accordance with national regulations. In the USA, follow Section 810 of the National Electric Code, ANSI/NFPA No.70-1984 (USA). In Canada, follow Section 54 of the Canadian Electrical Code. These codes describe correct installation procedures for grounding the outdoor unit, mast, lead-in wire and discharge unit, size of grounding conductors and connection requirements for grounding electrodes. Other regulations may apply in different countries and therefore it is recommended that installation be contracted to a professional installer.

Recommendation for earth grounding

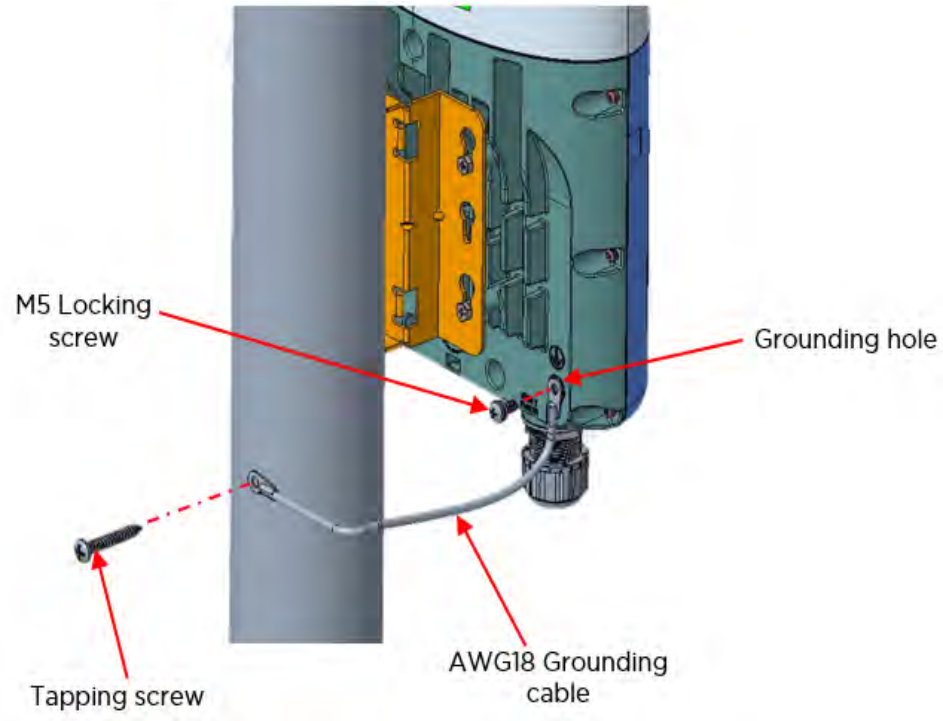

For grounding hole (XV2-2T and XE3-4T platforms):

- Use M5 screw with lock washer
- Use AWG18 grounding cable

The other side of the grounding cable must be permanently connected to the earth ground of the building.

Powering down before servicing

Always power down and unplug the equipment before servicing.

Primary disconnect device

The Enterprise AP power supply is the primary disconnect device.

RF exposure near the antenna

Strong Radio Frequency (RF) fields will be present close to the antenna when the transmitter is ON. Always turn OFF the power to the AP device before undertaking maintenance activities in front of the antenna.

Important regulatory information

The Enterprise Wi-Fi 6 AP product is certified as an unlicensed device in frequency bands where it is not allowed to cause interference to licensed services (called primary users of the bands).

Radar avoidance

In countries where radar systems are the primary band users, the regulators have mandated special requirements to protect these systems from interference caused by unlicensed devices. Unlicensed devices must detect and avoid co-channel operation with radar systems.

The Enterprise Wi-Fi 6 APs detects and avoids functionality for countries and frequency bands requiring protection for radar systems. The Enterprise Wi-Fi 6 APs is qualified for ETSI/FCC DFS certification (see Note) for radar detection and avoidance as per the law.

> **Note**
>
> Country-specific limits apply, some bands require Dynamic Frequency Selection (DFS). DFS bands operation subject to regulatory approval. Check Software release notes for details.

Installers and users must meet all local regulatory requirements for radar detection. To meet these requirements, users must set the correct country code during commissioning of the Enterprise Wi-Fi 6 APs equipment. If this is not done, installers and users may be liable to civil and criminal penalties.

Contact the Cambium helpdesk if more guidance is required.

Human exposure to radio frequency energy

Relevant standards (USA and EC) applicable when working with RF equipment are:

- ANSI IEEE C95.1-1991, IEEE Standard for Safety Levels with Respect to Human Exposure to Radio Frequency Electromagnetic Fields, 3 kHz to 300 GHz.
- Council recommendation of 12 July 1999 on the limitation of exposure of the general public to electromagnetic fields (0 Hz to 300 GHz) (1999/519/EC) and respective national regulations.
- Directive 2013/35/EU of the European Parliament and of the Council of 26 June 2013 on the minimum health and safety requirements regarding the exposure of workers to the risks arising from physical agents (electromagnetic fields) (20th individual Directive within the meaning of Article 16(1) of Directive 89/391/EEC) and repealing Directive 2004/40/EC.
- US FCC limits for the general population. See the FCC website at https://www.fcc.gov/, and the policies, guidelines, and requirements in Part 1 of Title 47 of the Code of Federal Regulations, as well as the guidelines and suggestions for evaluating compliance in FCC OET Bulletin 65.
- Health Canada limits for the general population. See the Health Canada website athttp://www.hc-sc.gc.ca/ewh-semt/pubs/radiation/radio_guide-lignes_direct/index-eng.php and Safety Code 6.
- BS EN 62232:2017 : Determination of RF field strength, power density and SAR in the vicinity of radiocommunication base stations for the purpose of evaluating human exposure (IEC 62232:2017).
- BS EN 50385:2017 Product standard to demonstrate the compliance of base station equipment with radiofrequency electromagnetic field exposure limits (110 MHz - 100 GHz), when placed on the market.
- ICNIRP (International Commission on Non-Ionizing Radiation Protection) guidelines for the general public. See the ICNIRP website at http://www.icnirp.de/ and Guidelines for Limiting Exposure to Time-Varying Electric, Magnetic, and Electromagnetic Fields.

USA and Canada specific information

Federal Communication Commission interference statement

This equipment has been tested and found to comply with the limits for a Class B digital device, pursuant to Part 15 of the FCC Rules. These limits are designed to provide reasonable protection against harmful interference in a residential installation. This equipment generates, uses and can radiate radio frequency energy and, if not installed and used in accordance with the instructions, may cause harmful interference to radio communications. However, there is no guarantee that interference will not occur in a particular installation. If this equipment does cause harmful interference to radio or television reception, which can be determined by turning the equipment off and on, the user is encouraged to try to correct the interference by one of the following measures:

- Reorient or relocate the receiving antenna.
- Increase the separation between the equipment and receiver.
- Connect the equipment into an outlet on a circuit different from that to which the receiver is connected.
- Consult the dealer or an experienced radio/TV technician for help.

Attention

Any changes or modifications not expressly approved by the party responsible for compliance could void the user's authority to operate this equipment.

This device complies with Part 15 of the FCC Rules. Operation is subject to the following two conditions:

1. This device may not cause harmful interference, and
2. This device must accept any interference received, including interference that may cause undesired operation.

For product available in the USA/Canada market, only channel 1~11 can be operated. Selection of other channels is not possible.

This device and its antennas(s) must not be co-located or operating in conjunction with any other antenna or transmitter except in accordance with FCC multi-transmitter product procedures.

CE statement

This equipment complies with EU radiation exposure limits set forth for an uncontrolled environment. This equipment should be installed and operated with minimum distance 20 cm between the radiator and your body.

Operation in the USA

This device complies with Part 15 of the FCC Rules. Operation is subject to the following two conditions.

1. This device may not cause harmful interference, and
2. This device must accept any interference received, including interference that may cause undesired operation.

For product available in the USA market, only channels 1 to 11 for the 2.4 GHz band can be operated. Selection of other channels is not possible.

FCC Radiation Exposure Statement

This equipment complies with FCC radiation exposure limits set forth for an uncontrolled environment. This equipment should be installed and operated with minimum distance of 62 cm (24.40 inches) between the radiator and your body. This equipment has been tested and found to comply with the limits for a Class B digital device, pursuant to Part 15 of the FCC Rules. These limits are designed to provide reasonable protection against harmful interference in a residential installation. This equipment generates, uses and can radiate radio frequency energy and, if not installed and used in accordance with the instructions, may cause harmful interference to radio communications. However, there is no guarantee that interference will not occur in a particular installation. If this equipment does cause harmful interference to radio or television reception, which can be determined by turning the equipment off and on, the user is encouraged to try to correct the interference by one of the following measures:

- Reorient or relocate the device.
- Increase the separation between the equipment and receiver.
- Connect the equipment into an outlet on a circuit different from that which the receiver is connected.
- Consult the dealer or an experienced radio/TV technician for help.
- The operation of this device is prohibited on oil platforms, cars, trains, boats, and aircraft, except that operation of this device is permitted in large aircraft while flying above 10,000 feet. Operation of transmitters in the 5.925 – 7.125 GHz band is prohibited for control of or Communications with unmanned aircraft systems.

Operation in Canada

ISED statement

This device complies with 'Innovation, Science and Economic Development (ISED) Canada' license-exempt RSS standard(s). Operation is subject to the following two conditions: (1) this device may not cause interference, and (2) this device must accept any interference, including interference that may cause undesired operation of the device.

Le présent appareil est conforme aux CNR d'Industrie Canada applicables aux appareils radio exempts de licence. L'exploitation est autorisée aux deux conditions suivantes : (1) l'appareil ne doit pas produire de brouillage, et (2) l'utilisateur de l'appareil doit accepter tout brouillage radioélectrique subi, même si le brouillage est susceptible d'en compromettre le fonctionnement.

For product available in the Canada market, only channels 1 to 11 can be operated. Selection of other channels is not possible. Pour les produits disponibles aux Canada du marché, seul le canal 1 à 11 peuvent être exploités. Sélection d'autres canaux n'est pas possible.

ISED Radiation Exposure Statement

This equipment complies with IC RSS-102 radiation exposure limits set forth for an uncontrolled environment. This equipment should be installed and operated with minimum distance 36 cm between the radiator and your body.

Cet équipement est conforme aux limites d'exposition aux rayonnements IC établies pour un environnement non contrôlé. Cet équipement doit être installé et utilisé avec un minimum de 36 cm de distance entre la source de rayonnement et votre corps.

Specific expertise and training required for professional installers

To ensure that the Enterprise Wi-Fi 6 AP is installed and configured in compliance with the requirements of Industry Canada and the FCC, installers must have the radio engineering skills and training described in this section. This is particularly important when installing and configuring an Enterprise Wi-Fi 6 AP system for operation in the 5 GHz band (5150 – 5250 MHz – FCC only, 5250 – 5350 MHz, 5470 – 5725 MHz, 5725 – 5850 MHz and 5925 - 6425 MHz).

Avoidance of weather radars

The installer must be familiar with the requirements in FCC KDB 443999. Essentially, the installer must be able to:

- Access the FCC database of weather radar location and channel frequencies.
- Use this information to correctly configure the product (using the UI) to avoid operation on channels that must be avoided according to the guidelines that are contained in the KDB and explained in detail in this user guide.
- In ETSI regions, the band 5600 MHz to 5650 MHz is reserved for the use of weather radars.

Warning (for XV3-4T)

This radio transmitter [109W-0073] has been approved by Innovation, Science and Economic Development Canada to operate with the antenna types listed below, with the maximum permissible gain indicated. Antenna types not included in this list that have a gain greater than the maximum gain indicated for any type listed are strictly prohibited for use with this device.

Le présent émetteur radio (109W-0073) a été approuvé par Innovation, Sciences et Développement économique Canada pour fonctionner avec les types d'antenne énumérés ci-dessous et ayant un gain admissible maximal d'antenne. Les types d'antennes non inclus dans cette liste qui ont un gain supérieur au gain maximal indiqué pour tout type listé sont strictement interdits pour une utilisation avec cet appareil.

Set	Brand	Model Number	Antenna Type	Net Gain (dBi)			
				WLAN 2.4GHz	Bluetooth	5GHz UNII 2A	5GHz UNII 2C, 3
1	Lynwave	ALX22X-121050-00	Dipole	4.4	-	5.5	5.5
2	Smartant	SAA19-22130	Dipole	3	-	5	6
3	Lynwave	OLX22X-127130-A	Patch	-	-	9.55	9.4
4	EAHiSON	ANT-DIR15-2X2-2.4G-01	Panel	17.23	-	-	-
5	KBT	ANT-DIR15-2X2-5.0G-01	Panel	-	-	16.55	16.4

The maximum antenna gain permitted for devices in the bands 5250-5350 MHz and 5470-5725 MHz shall be such that the equipment still complies with the EIRP limit.

le gain maximal d'antenne permis pour les dispositifs utilisant les bandes 5250-5350 MHz et 5470-5725 MHz doit se conformer à la limite de p.i.r.e.

The maximum antenna gain permitted for devices in the band 5725-5850 MHz shall be such that the equipment still complies with the EIRP limits specified for point-to-point and non-point-to-point operation as appropriate.

le gain maximal d'antenne permis (pour les dispositifs utilisant la bande 5725-5850 MHz) doit se conformer à la limite de p.i.r.e. spécifiée pour l'exploitation point à point et non point à point, selon le cas.

Ethernet networking skill

The installer must have the ability to configure IP addressing on a PC and to set up and control products using a web browser interface.

Ethernet cabling types

Following are the recommended Ethernet cabling types for various APs which has Multi-gigabit capable Ethernet ports:

- XV3-8 and XE5-8 (5Gbps)
- XV2-2, XE3-4, and XV2-2T (2.5Gbps)

For 2.5Gbps, Cambium Networks recommends CAT6 cable or better to cover the 100m maximum cable length runs. For shorter runs under about 30m, CAT5E cable is recommended. For high radio-frequency electric fields environments, shielded CAT5E or CAT6 type cabling is recommended.

For 5Gbps, Cambium Networks recommends CAT6 for cable runs under about 50m and CAT6a for lengths over 50m up to the maximum of 100m. Shielding cables should be used and the shielded CAT6\CAT6a needs to be continuous from the AP to its Ethernet switch.

Pole or tower mount guidelines

If you need to install AP to a metal tower or pole, then in addition to the general protection requirements, follow the below requirements:

- Ensure that the position of the equipment is lower than the top of the tower or its lightning air terminal.
- Ensure that the metal tower or pole is correctly grounded.
- Install a grounding kit at the first point of contact (top), between the drop cable and the tower.
- Install a grounding kit at the bottom of the tower, near the vertical to horizontal transition point.

Note

If grounding kit is installed, ensure the grounding kit is bonded to the tower or Tower Ground Bus Bar (TGB).

Connection examples of pole or tower installations are shown in below figure.

Figure 1: *Grounding and lightning protection on pole or tower*

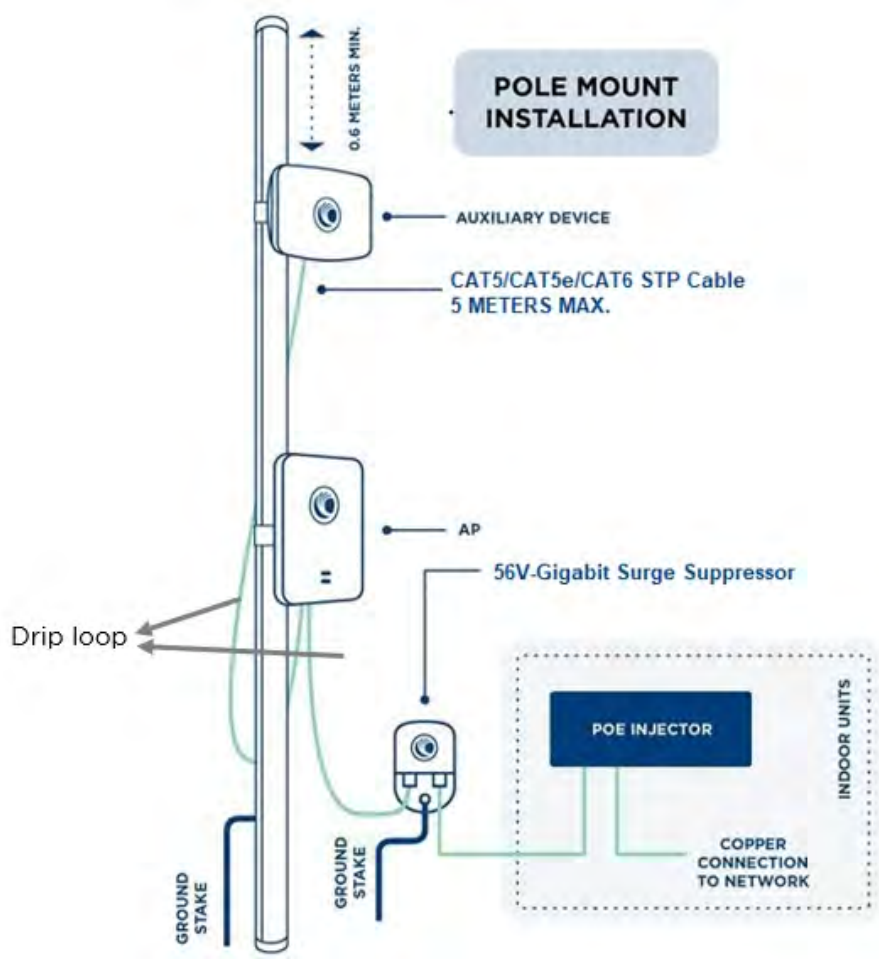

Wall mount guidelines

If you need to install AP on the wall of a building, then in addition to the general protection requirements, follow the below requirements also:

- Ensure that the position of the equipment is lower than the top of the building or its lightning air terminal.
- Ensure that the building is correctly grounded.

Connection examples of wall installations are shown in below figure.

Figure 2: *Grounding and lightning protection on wall*

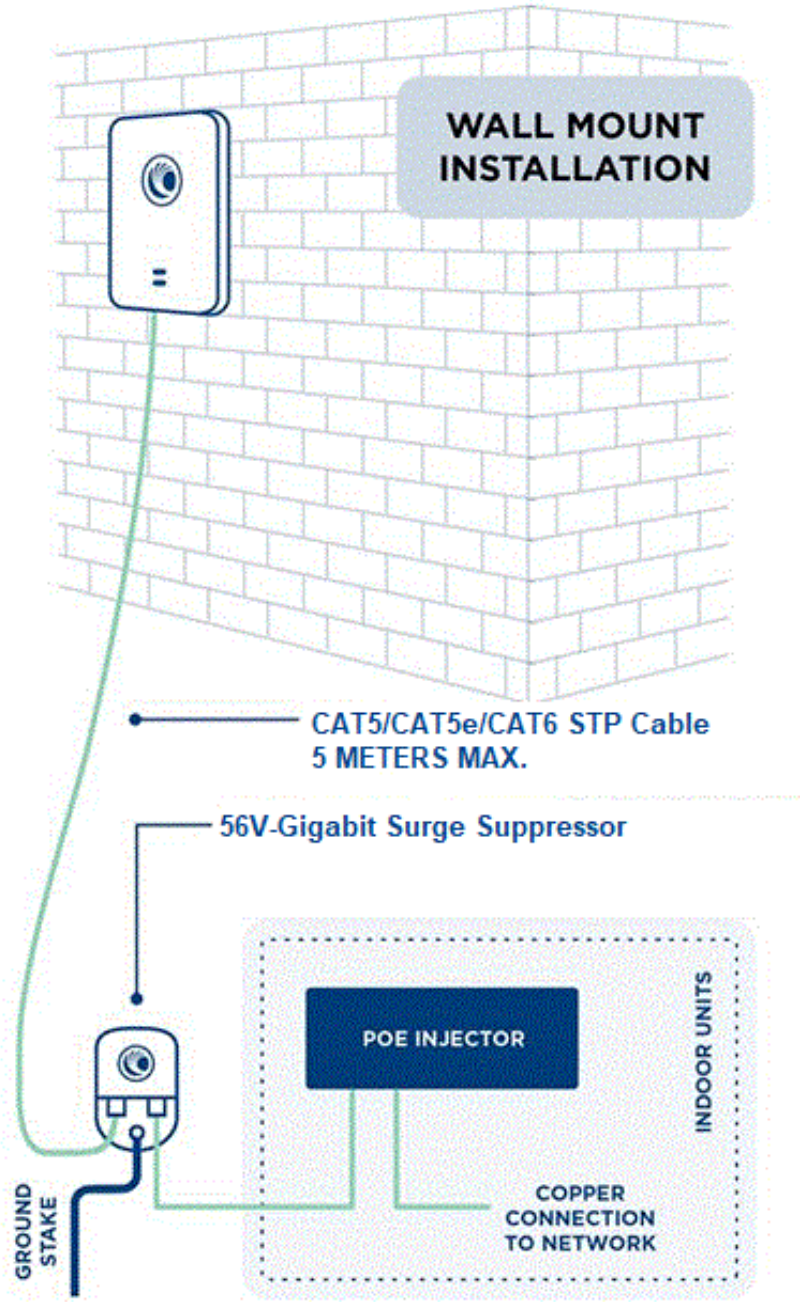

Note

There should be a drip loop immediately at the Ethernet port entrance going to the AP.

Training

The installer needs to have basic competence in radio and IP network installation. The specific requirements applicable to the Cambium Networks Enterprise Wi-Fi 6 AP must be gained by reading this User Guide and by performing sample setups at base workshop before live installments.

Power density exposure limit

This section includes the following topics:

- Calculation of power density and distance
- Calculated distances and power compliance margins

Install the radios for the platform family of wireless solutions so as to provide and maintain the minimum separation distances from all persons.

The applicable FCC power density exposure limit for RF energy in the 2.4 and 5 GHz frequency bands is 1 mW/cm2.

The applicable ISEDC power density exposure limit for RF energy in unlicensed bands is 0.02619 * (f^ (0.6834)), where f is the lowest frequency of the supported band. For licensed bands, the power density exposure limit is 0.6455 * (f^ (0.5)), where f is the lowest frequency of the supported band.

Calculation of power density and distance

The following calculation is based on the ANSI IEEE C95.1-1991 method, as that it provides a worst-case analysis. Details of the assessment to EN50383:2002 can be provided, if required.

Peak power density in the far field of a radio frequency point source is calculated as follows:

$$S = \frac{P.G}{4\pi d^2}$$

Where:

- P – Maximum average transmit power capability of the radio, in W
- G – total Tx gain as a factor, converted from dB
- S – power density (W/m^2)
- d – Distance from point source, in cm (Centimeters)

Table 5: Antenna details

AP	Antenna	Gain (for 2.4 GHz in dBi)	Gain (for 5 GHz in dBi)	Gain (for 6 GHz in dBi)
XE5-8	Omnidirectional	5	5	4
XV3-8	Omnidirectional	5.1	6.7	N/A
XV2-2	Omnidirectional	5.4	6.3	N/A
XV2-2T	Omnidirectional	5.3	9.0	N/A

AP	Antenna	Gain (for 2.4 GHz in dBi)	Gain (for 5 GHz in dBi)	Gain (for 6 GHz in dBi)
XV2-2T1	Sector	11.9	14	N/A
XE3-4	Omnidirectional	4.85	5.6	6.3
XE3-4T	External	17.23	16.55	13
XV2-21X	Omnidirectional	5.05	7.75	N/A
XV2-23T	Omnidirectional	7.34	11.43	N/A
XV2-22H	Omnidirectional	4.47	5.56	N/A

For details on minimum safe distance value, please refer About This User Guide.

Calculated distances and power compliance margins

About This User Guide displays power density and minimum safe separation distance from point source for each frequency band and antenna combination for the USA and Canada. These are conservative distances that include compliance margins.

Cambium Networks Enterprise Wi-Fi 6 AP adheres to all applicable EIRP limits for transmit power when operating in MIMO mode. Separation distances and compliance margins include compensation for both transmitters.

$$d = \sqrt{\frac{P.G}{4\pi.S}}$$

Explanation of terms used in the following tables:

- P – maximum average transmits power of the radio (Watt)
- G – total transmit gain as a factor, converted from dB
- S – power density (W/m^2)
- d – minimum safe separation distance from point source (Centimeters)

Table 6: Power density and distance

Product	Regulatory Domain	Power density S (mW/cm^2)	Distance d (cm)
XE5-8	FCC	0.055/0.056/0.008 (2.4/5/6 GHz)	75
	IC	0.203/0.207/0.038 (2.4/5/6 GHz)	39
	CE	0.1158/3.348/0.23379 (2.4/5/6 GHz)	26

Product	Regulatory Domain	Power density S (mW/cm²)	Distance d (cm)
XV3-8	FCC	0.21/0.33	31
	IC	0.22/0.35	30
	CE	0.197/7.47 (2.4G/5G W/m²)	20
XV2-2	FCC	0.45/0.505	25
	IC	0.31/0.35	30
	CE	0.1966/7.598 (2.4G/5G W/m²)	20
XV2-2T	FCC	0.36/0.597	23
	IC	0.26/0.433	27
	CE	0.1957/1.98 (2.4G/5G W/m²)	20
XV2-2T1	FCC	0.466/0.461 (2.4G/5G)	26
	IC	0.328/0.324 (2.4G/5G)	31
	CE	0.193/1.97 (2.4G/5G W/m²)	20
XE3-4	FCC	0.24/0.35/0.02196 (2.4G/5G/6G)	30
	IC	0.20/0.29 (2.4G/5G)	33
	CE	0.1247/4.548/0.253 (2.4G/5G/6G W/m²)	25
XE3-4T	FCC	7.38/7.38/7.38 (2.4G/5G/BT W/m²)	62
	IC	0.24388/0.24388/0.0013 (2.4G/5G/BT W/m²)	36
	CE	0.12674/5.04545/0.01183 (2.4G/5G/BT W/m²)	25
XV2-21X	FCC	0.12152/0.12152	51
	IC	0.32890/0.32890	31
	CE	0.19043/7.88370	20
XV2-23T	FCC	0.12152/0.12152	51
	IC	0.32890/0.3289	31
	CE	0.89149/7.68653	20
XV2-22H	FCC	0.12252/0.10647	41
	IC	0.32953/0.28635	25
	CE	0.19803/3.27137	20

Chapter 2: Packaging and Installation of Access Point

This chapter describes the following topics:

- Unpacking the Access Point
- Package contents
- Mounting the device

Unpacking the Access Point

After you purchase a Cambium Networks Enterprise Wi-Fi 6 AP, unpack the AP and check the package contents.

1. Open the AP package, and then carefully remove the contents.
2. Verify that all items listed in Package contents below are included in the package. Check each item for damage. If any item is damaged or missing, notify your authorized Cambium Networks Enterprise Wi-Fi 6 AP sales representative.

Package contents

A complete Cambium Networks Enterprise Wi-Fi 6 AP package contains all the items listed below:

1. Cambium Networks Enterprise Wi-Fi 6 AP
2. Quick Start Guide (QSG)
    - Specifications
    - Safety Notice
    - Compliance
3. Hardware Accessories (Based on SKU/Model)
    - Mounting Kits

Mounting the device

This section includes the following topics:

Enterprise Wi-Fi 6 APs features an attractive design with flexible mounting options that allows the APs to smoothly blend into any business environment. Enterprise Wi-Fi 6 APs are mounted in the following methods:

- Wall Mount
- Celling Mount
- T-bar Mount

- Pole Mount
- Gang mount
- Table mount
- Single gang mount
- General wall mount

Table 6 provides an overview of the type of mountings each Enterprise Wi-Fi 6 APs supports.

Table 7: Types of mounting the device

Access Point	Wall Mount	Ceiling Mount	T-bar Mount	Pole Mount	Table Mount	Single Gang Mount
XE5-8	✓	✓	✓			
XV3-8	✓	✓	✓			
XV2-2	✓	✓	✓			
XV2-2T	✓			✓		
XV2-2T1	✓			✓		
XE3-4	✓	✓	✓			
XE3-4T	✓			✓		
XV2-21X	✓	✓	✓			
XV2-23T	✓			✓		
XV2-22H	✓				✓	✓

Mounting XV3-8

The XV3-8 units are mounted either by ceiling mount, wall mounting or T-bar mounting method.

Ceiling mount

To mount the XV3-8 unit on the ceiling, perform the following steps:

1. Determine where XV3-8 needs to be mounted and remove the ceiling tile.
2. Using the hole template, mark the hole locations.
3. Drill the holes for the four mounting screws using a 5 mm (3/6”) diameter drill bit.
4. Drill a hole for the RJ45 cable using a 15 mm (5/8”) diameter bit.
5. Hold the mounting plate on the top side of the ceiling tile and screw it on the mounting bracket.
6. Run the RJ45 cable (s) through the 15 mm hole and remount the ceiling tile.
7. Attach the RJ45 cable (s) to the XV3-8 unit.
8. Slide the XV3-8 unit into the mounting bracket.

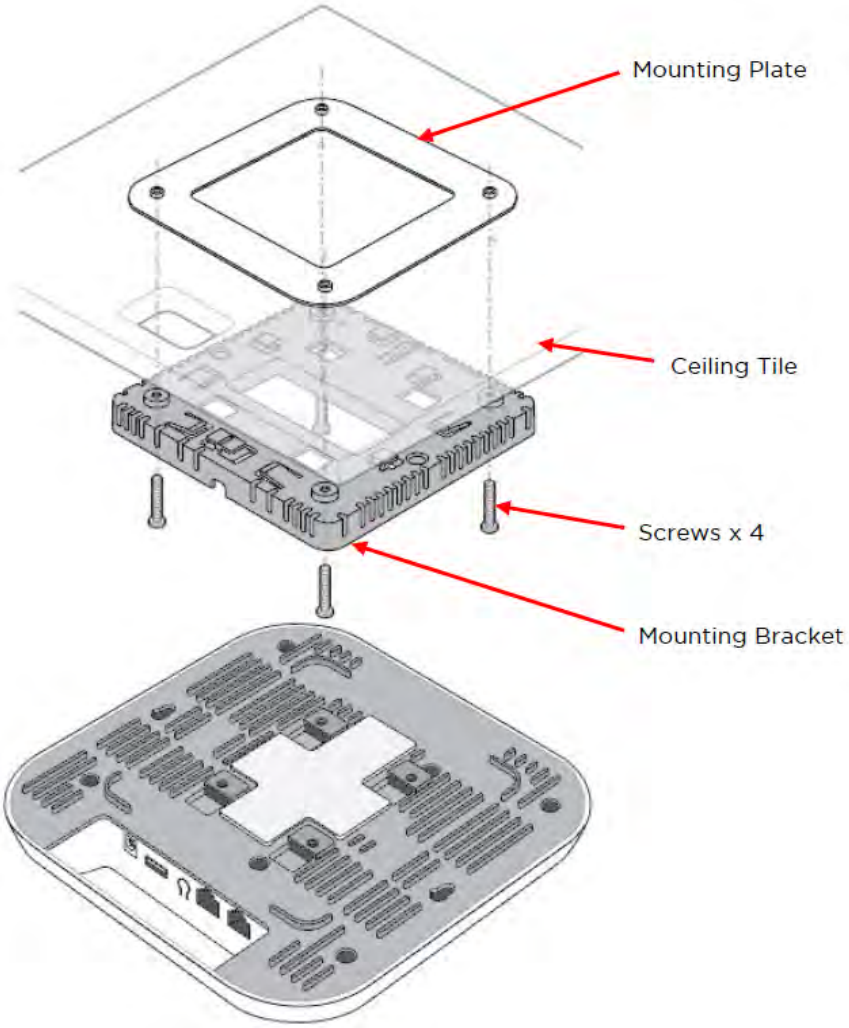

Wall mounting

You can mount XV3-8 unit to any wall by using two screws with corresponding wall anchors. The ceiling mount bracket can be used as a template to align the screws with the unit.

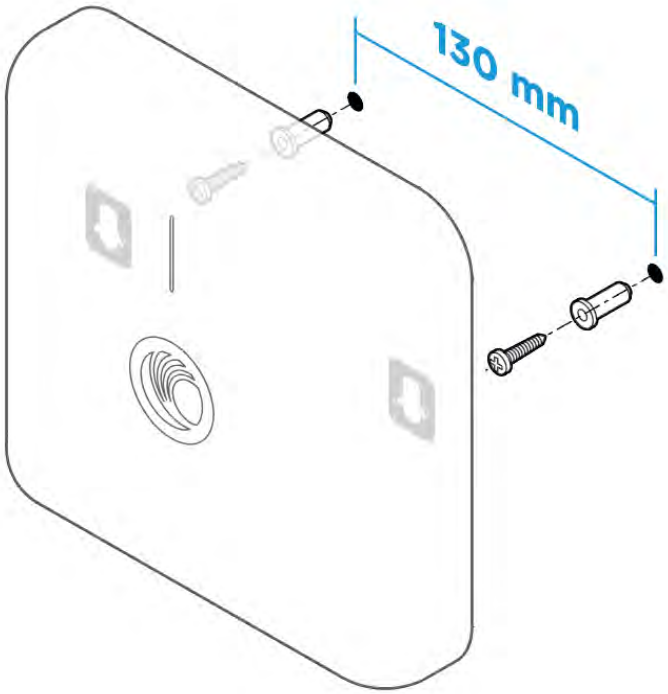

T-bar Mounting

The XV3-8 can be secured to a 38mm ceiling T-bar rail by using the ceiling mount bracket. The **A** marking on the bracket must be used for this width T-bar rail.

38mm T-Bar

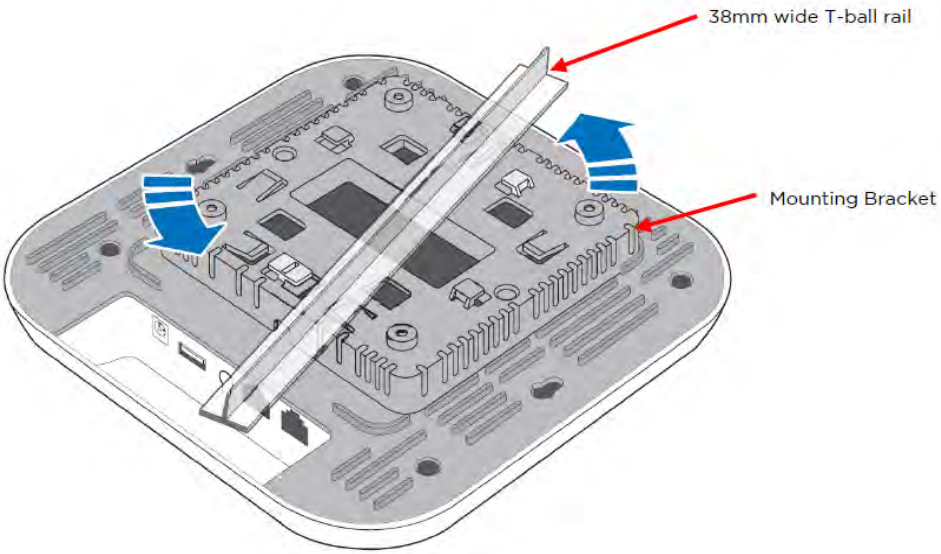

24mm T-Bar

The XV3-8 unit can be mounted to a 24mm width T-bar rail using the clips built into the underside of the unit. The **B** marking on the bracket must be used for this width T-bar rail.

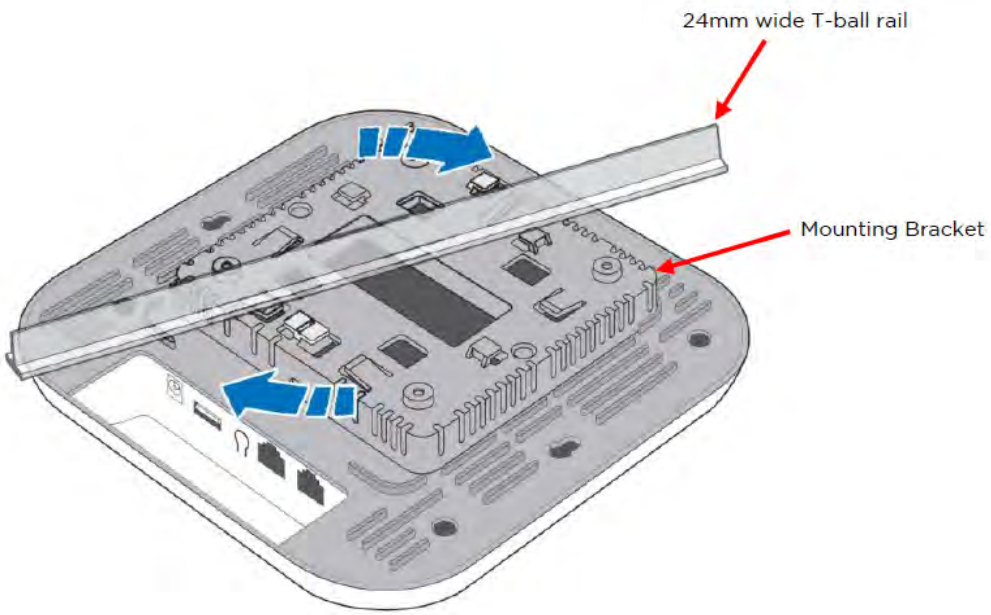

14mm T-Bar

The XV3-8 unit can be mounted to a 14mm width T-bar rail using the clips built into the underside of the unit. The **C** marking on the bracket must be used for this width T-bar rail.

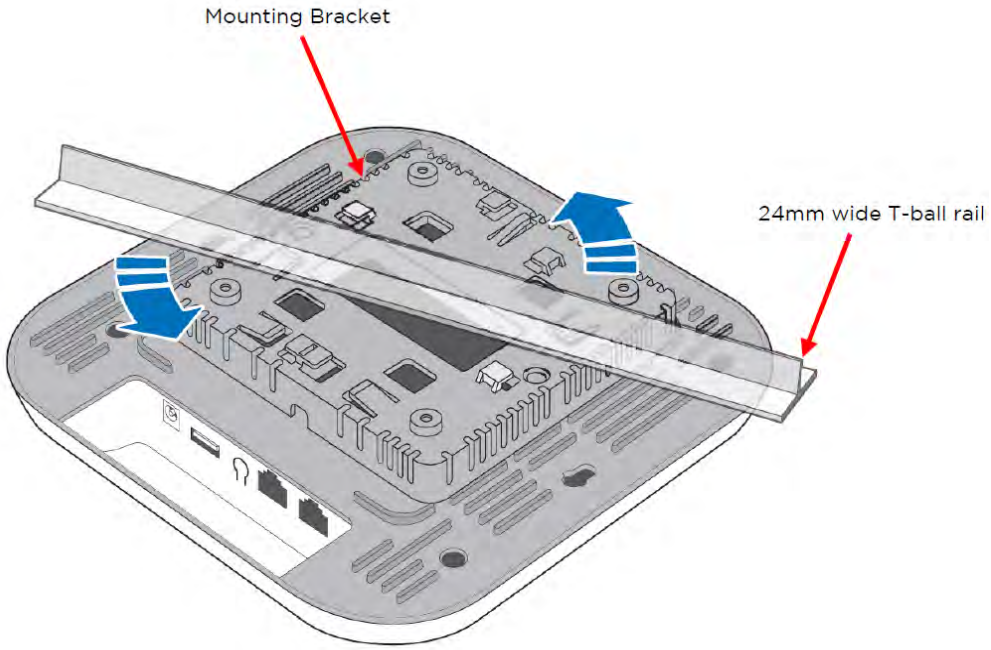

Mounting XE5-8

The XE5-8 units are mounted either by ceiling mount, wall mounting or T-bar mounting method.

Ceiling mount

To mount the XE5-8 unit on the ceiling, perform the following steps:

1. Determine where XE5-8 needs to be mounted and remove the ceiling tile.
2. Using the hole template, mark the hole locations.
3. Drill the holes for the four mounting screws using a 5 mm (3/6”) diameter drill bit.
4. Drill a hole for the RJ45 cable using a 15 mm (5/8”) diameter bit.
5. Hold the mounting plate on the top side of the ceiling tile and screw it on the mounting bracket.
6. Run the RJ45 cable (s) through the 15 mm hole and remount the ceiling tile.
7. Attach the RJ45 cable (s) to the XE5-8 unit.
8. Slide the XE5-8 unit into the mounting bracket.

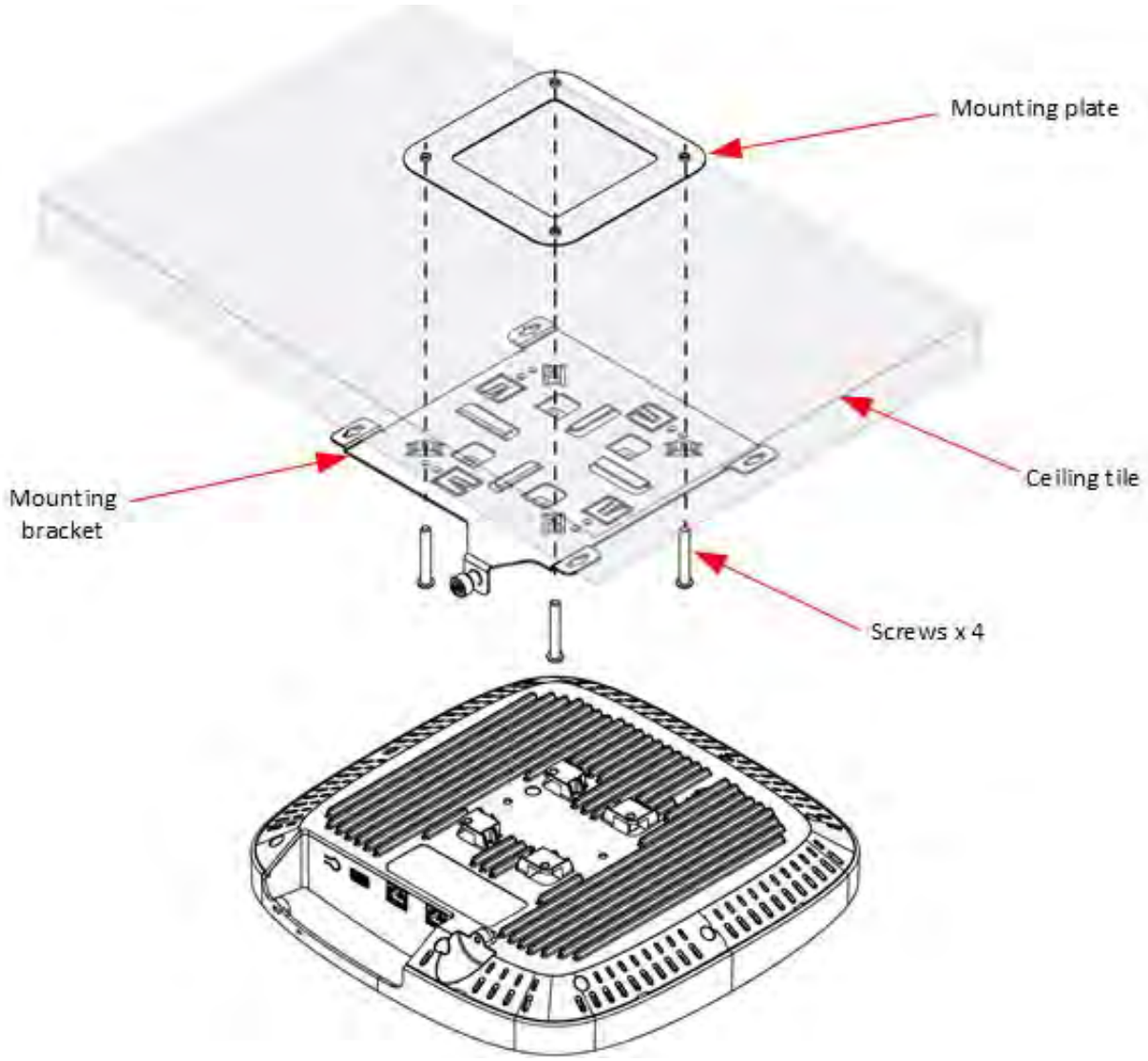

Wall mounting

You can mount XE5-8 unit to any wall by using two screws with corresponding wall anchors. The ceiling mount bracket can be used as a template to align the screws with the unit.

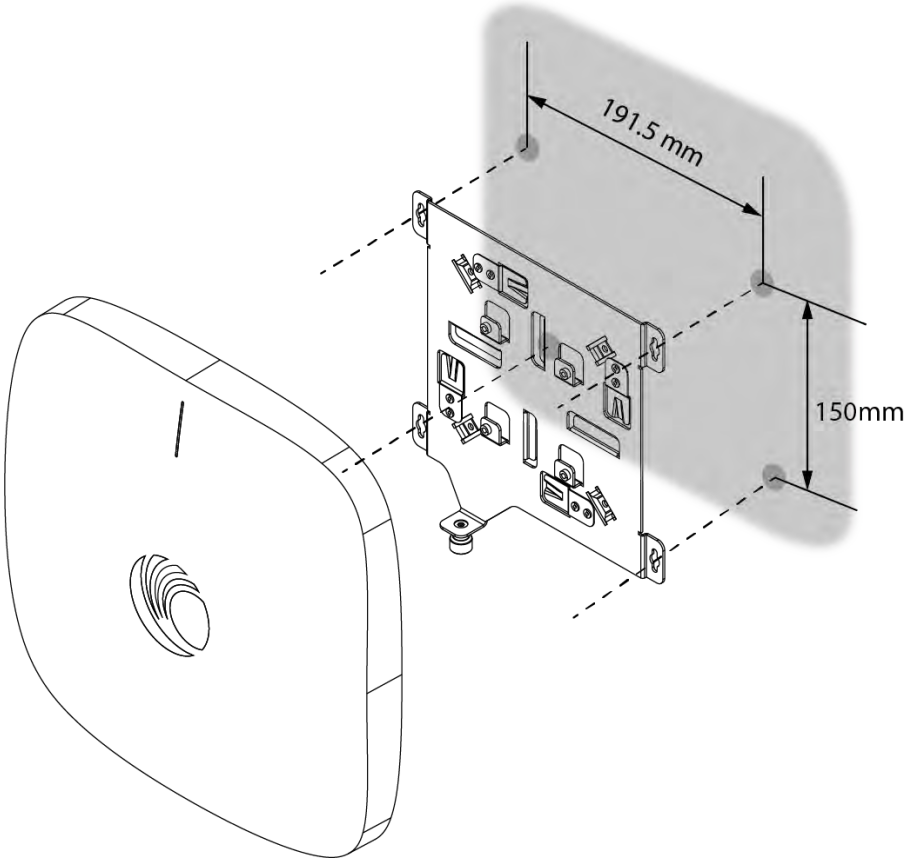

T-bar Mounting

The XE5-8 can be secured to a 38mm ceiling T-bar rail by using the ceiling mount bracket. The **A** marking on the bracket must be used for this width T-bar rail.

38mm T-Bar

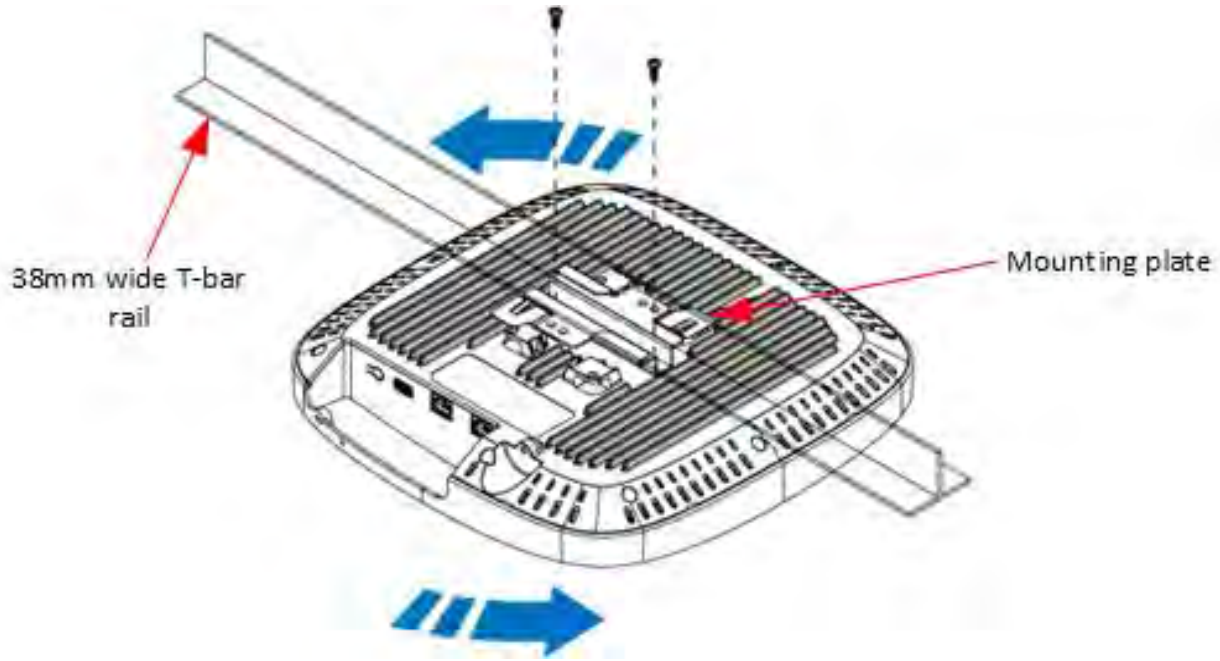

24mm T-Bar

The XE5-8 unit can be mounted to a 24mm width T-bar rail using the clips built into the underside of the unit. The **B** marking on the bracket must be used for this width T-bar rail.

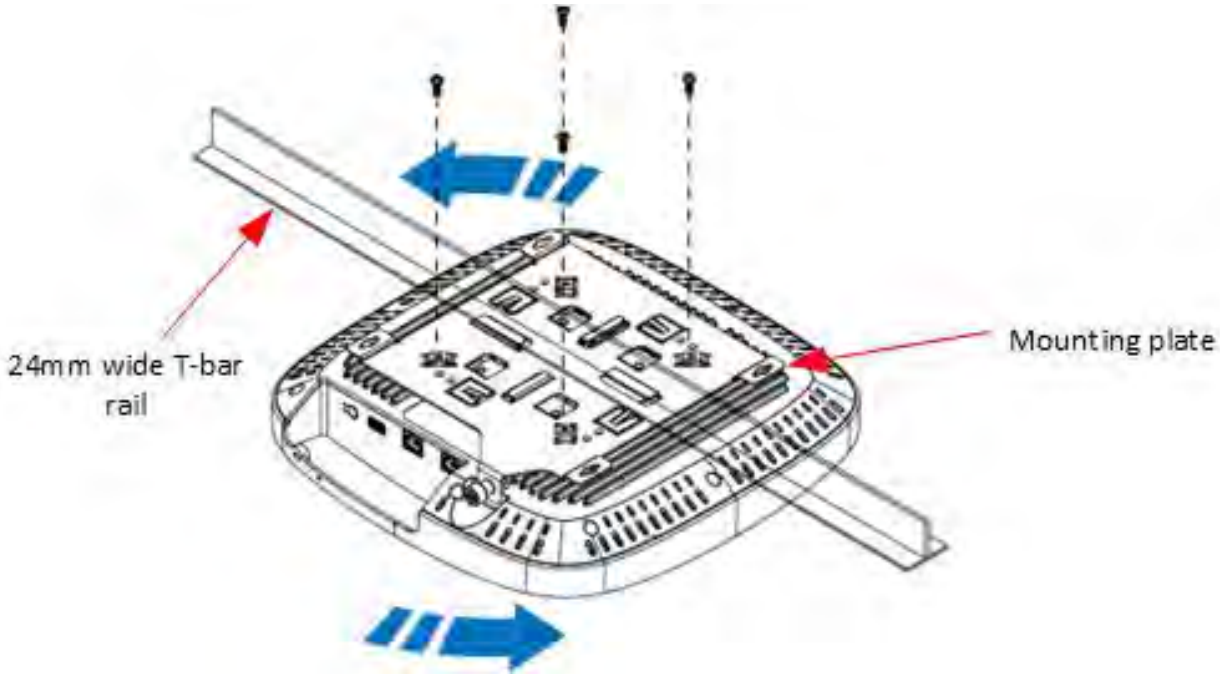

14mm T-Bar

The XE5-8 unit can be mounted to a 14mm width T-bar rail using the clips built into the underside of the unit. The **C** marking on the bracket must be used for this width T-bar rail.

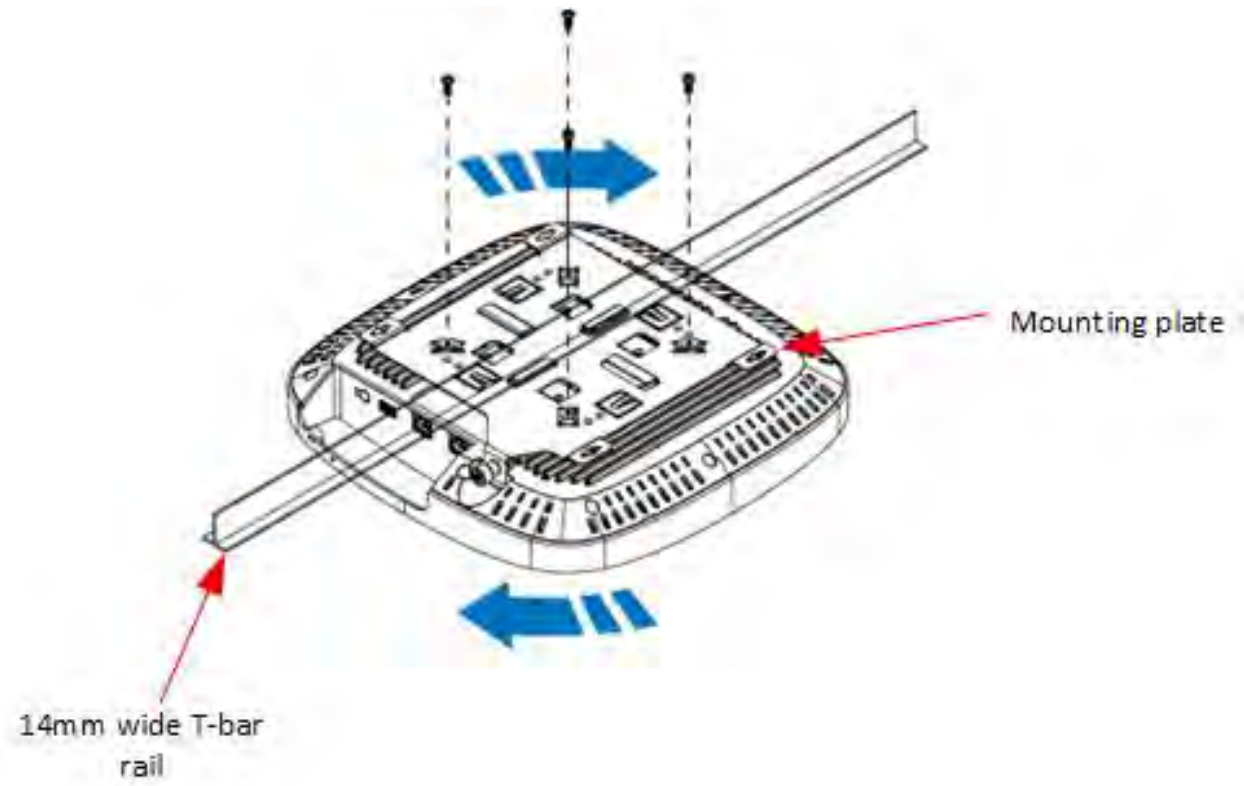

Mounting XV2-2

The XV2-2 units are mounted either by using the ceiling mount, wall mounting or T-bar mounting method.

Ceiling mount

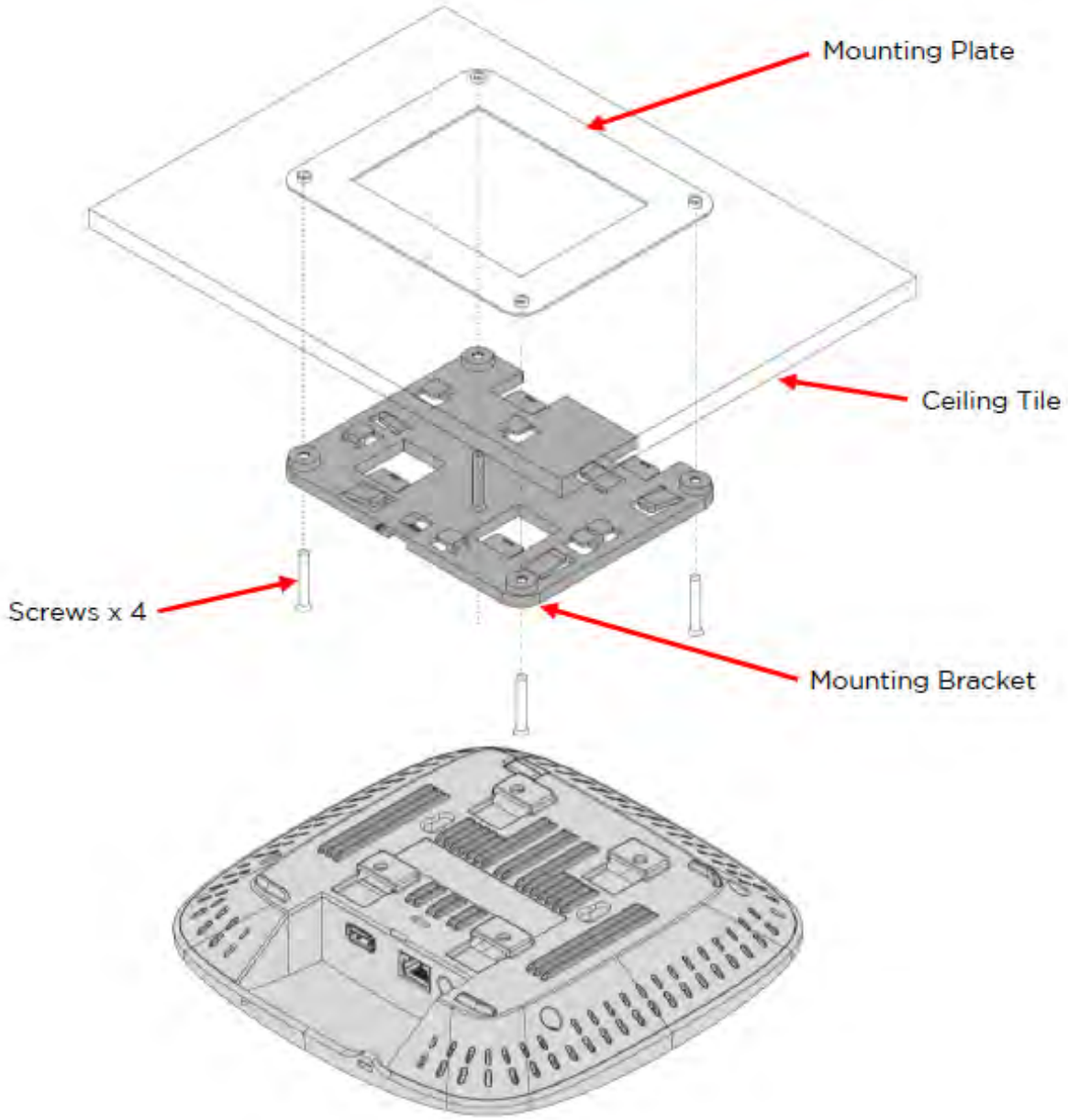

1. Determine where XV2-2 needs to be mounted and remove the ceiling tile.
2. Using the hole template, mark the hole locations.
3. Drill the holes for the 4 mounting screws using a 5mm (3/6”) diameter drill bit.
4. Drill the RJ45 cable hole using a 15 mm (5/8”) diameter bit.
5. Hold the mounting plate on the top side of the ceiling tile and screw it on the mounting bracket.
6. Run the RJ45 cable (s) through the 15mm hole and remount the ceiling tile.

7. Attach the RJ45 cable (s) to XV2-2 unit .
8. Slide XV2-2 into the mounting bracket.

Wall mounting

You can mount XV2-2 unit to any wall by using two screws with corresponding wall anchors. The ceiling mount bracket can be used as a template to align the screws with the unit.

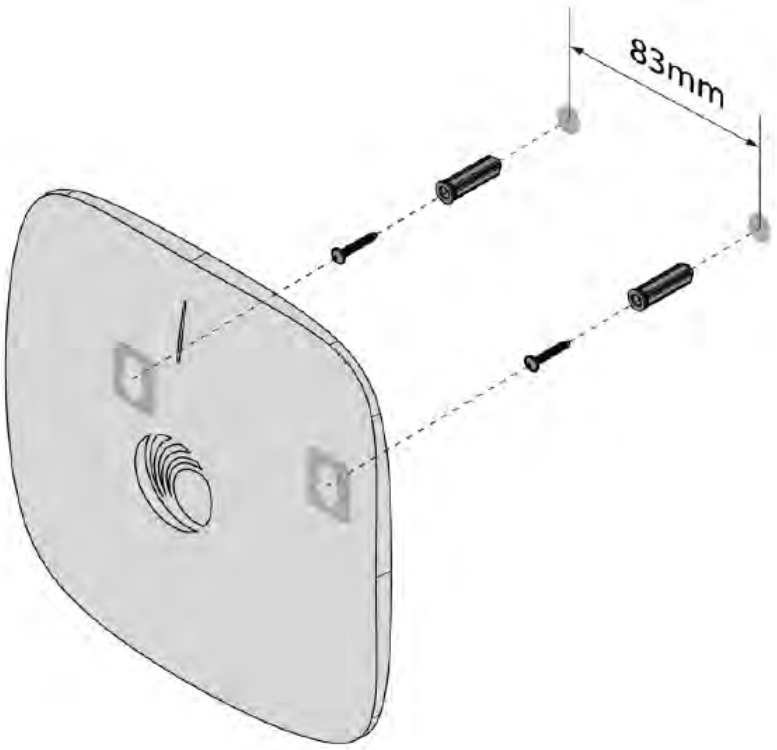

T-bar mounting

The XV2-2 unit can be secured to a 38mm ceiling T-bar rail by using the ceiling mount bracket. The A marking on the bracket must be used for this width T-bar rail.

38mm T-Bar

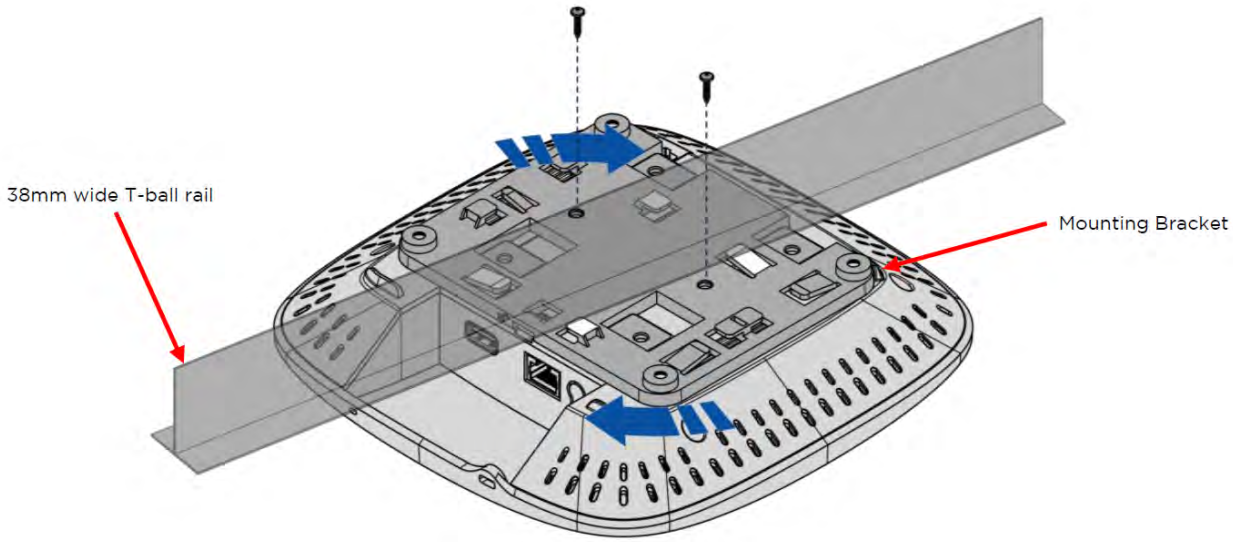

24mm T-Bar

The XV2-2 unit can be mounted to a 24mm width T-bar rail using the clips built into the underside of the unit. The **B** marking on the bracket must be used for this width T-bar rail.

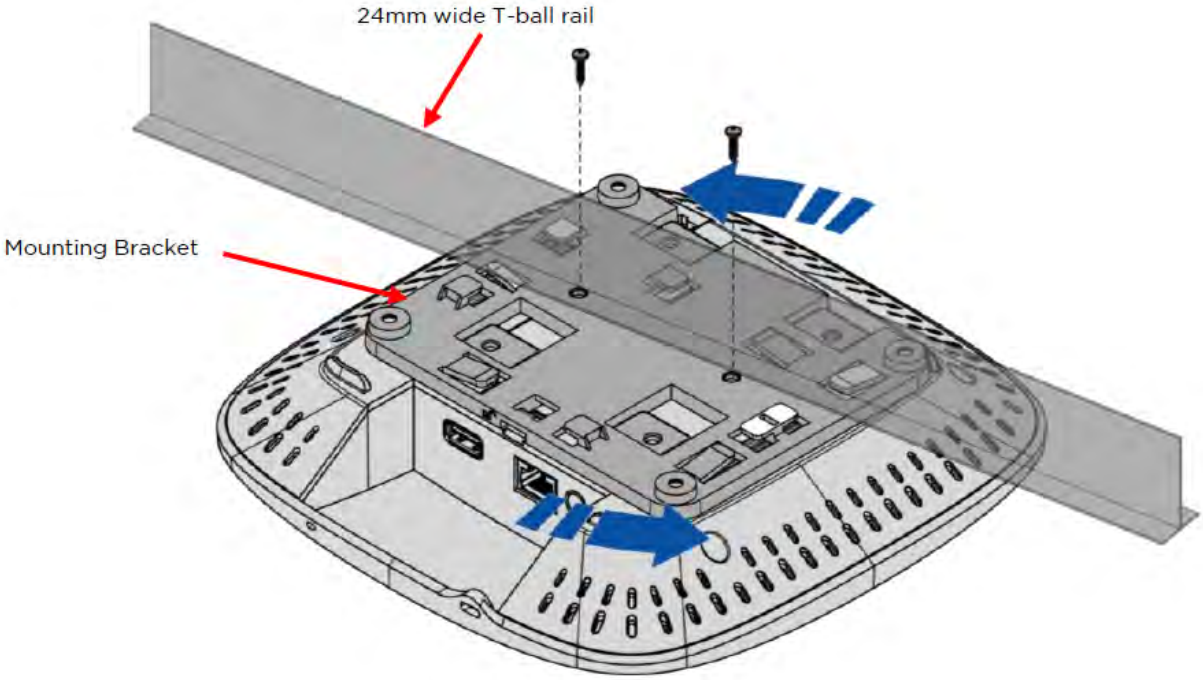

14mm T-Bar

The XV2-2 unit can be mounted to a 14mm width T-bar rail using the clips built into the underside of the unit. The **C** marking on the bracket must be used for this width T-bar rail.

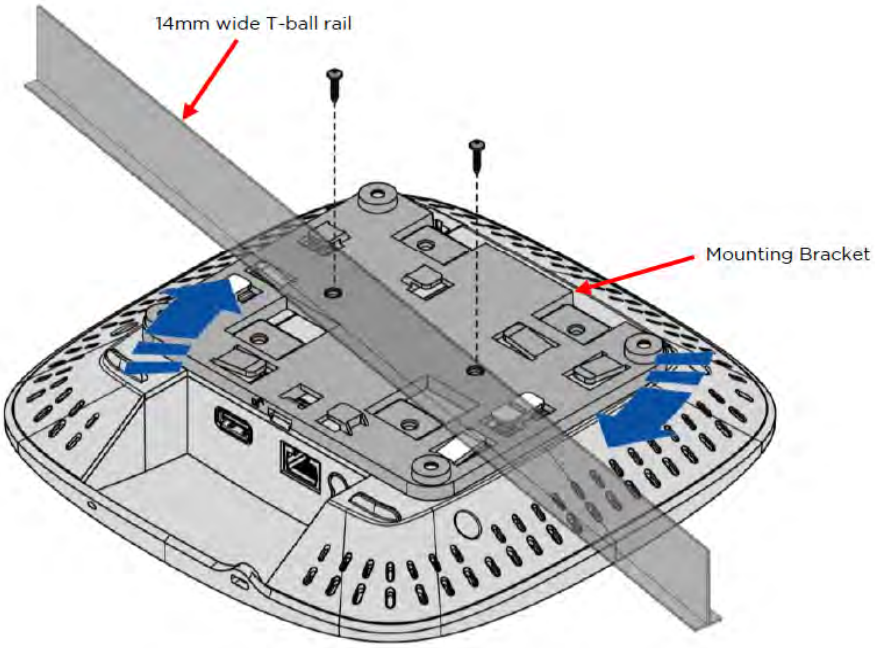
14mm wide T-ball rail
Mounting Bracket

Mounting XV2-2T/XV2-2T1

The XV2-2T/XV2-2T1 units are mounted either by using the wall mounting or pole mounting method.

Wall mounting

The XV2-2T/XV2-2T1 units can be mounted to any wall by using two screws with corresponding wall anchors. To mount the XV2-2T/XV2-2T1 unit on the wall, perform the following steps:

1. Drill two holes of each Ø6 mm (Ø0.25” Inch) on the wall where you want to mount the XV2-2T/XV2-2T1 AP.

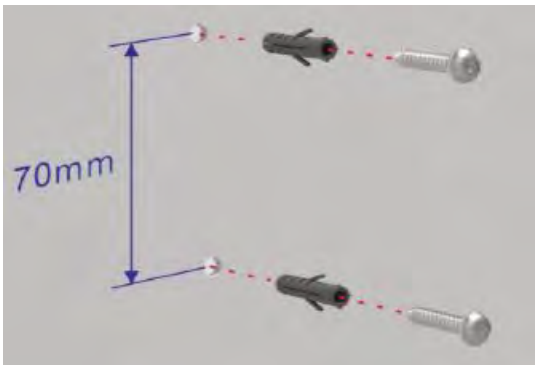

2. Press fit the plastic anchor and assemble fastener.
3. Leave 5mm to 6mm gap between the wall and the fastener head, as shwon in below figure.

4. Use the four mounting slots given on the back of the radio to mount it on the wall.
5. Make sure that four screws are attached to the back side of the XV2-2T/XV2-2T1 unit. Do not tighten the screws, completely.

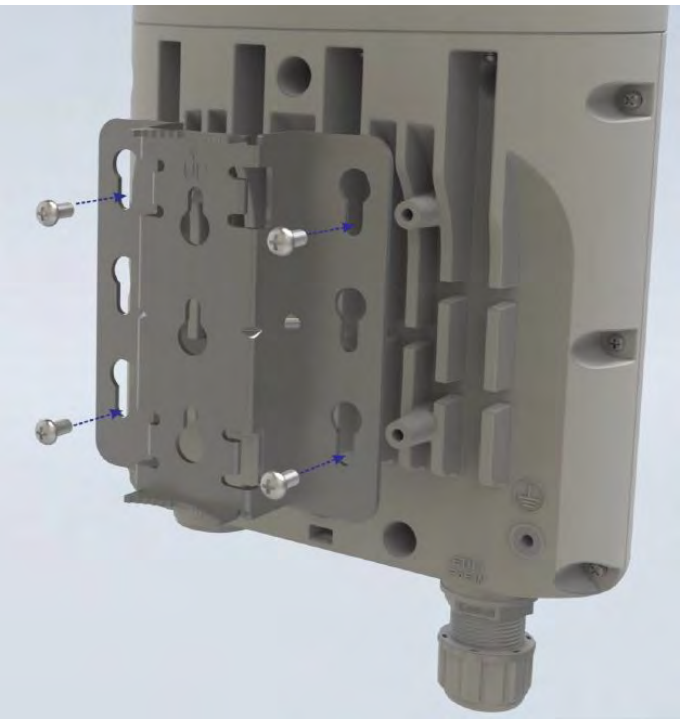

6. Hang the XV2-2T unit to the wall mount bracket and tighten the four screws as shown in below figure.

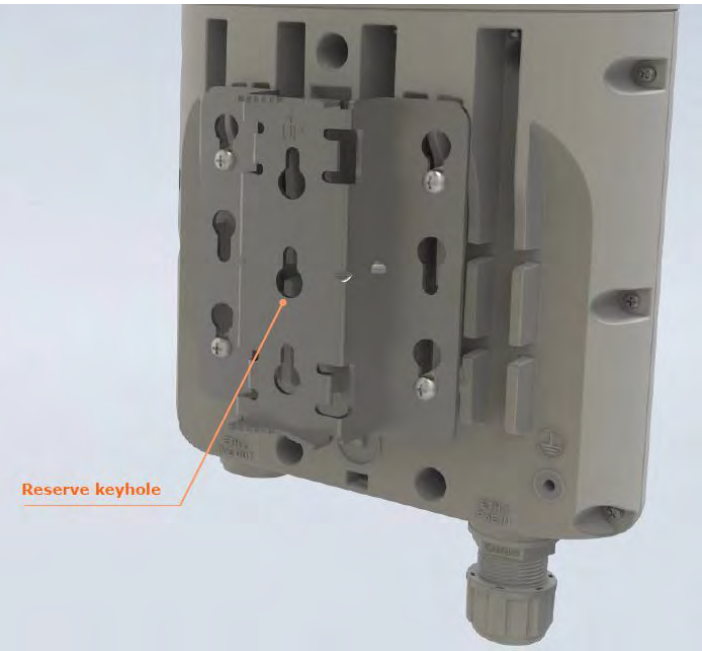

Pole mount with level bracket

To mount the XV2-2T/XV2-2T1 unit on the pole, perform the following steps:

1. Insert the hose mounting clamp though the pole mounting level bracket.

2. Fix the clamp to the pole by applying 9.0 Nm torque.

3. Fasten four mounting screws.
4. Align the chassis with the guide hole of the pole mounting level bracket and

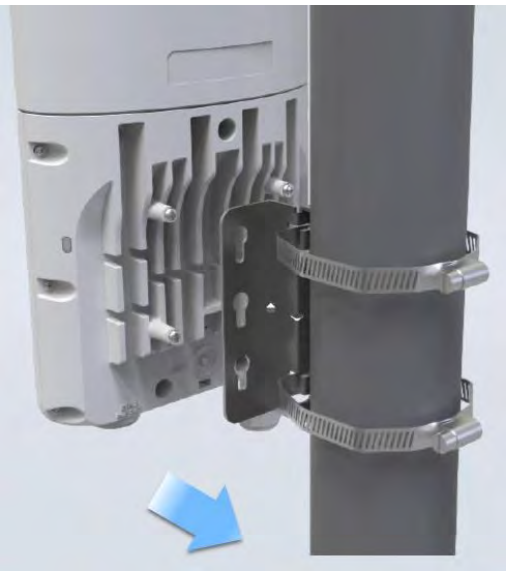

5. Slide it downwards.

Pole mount with tilt bracket (Only for XV2-2T1)

To mount the XV2-2T1 unit on the pole, perform the following steps:

1. Assemble the pole mount holder to XV2-2T1 by using the four M5 screws, as shown below.

2. Install the pole mount bracket to the pole by using two hose clamps with the 9Nm torque.

3. Assemble XV2-2T1 (with pole mount holder) to pole mount bracket. Use M12 stud, washer, and M12 nut to secure it by applying 3Nm torque, as shown below.

Mounting XE3-4

The XE3-4 units are mounted by using one of the following mounting techniques:

- Ceiling mount,
- Wall mounting, or
- T-bar mounting.

Ceiling mount

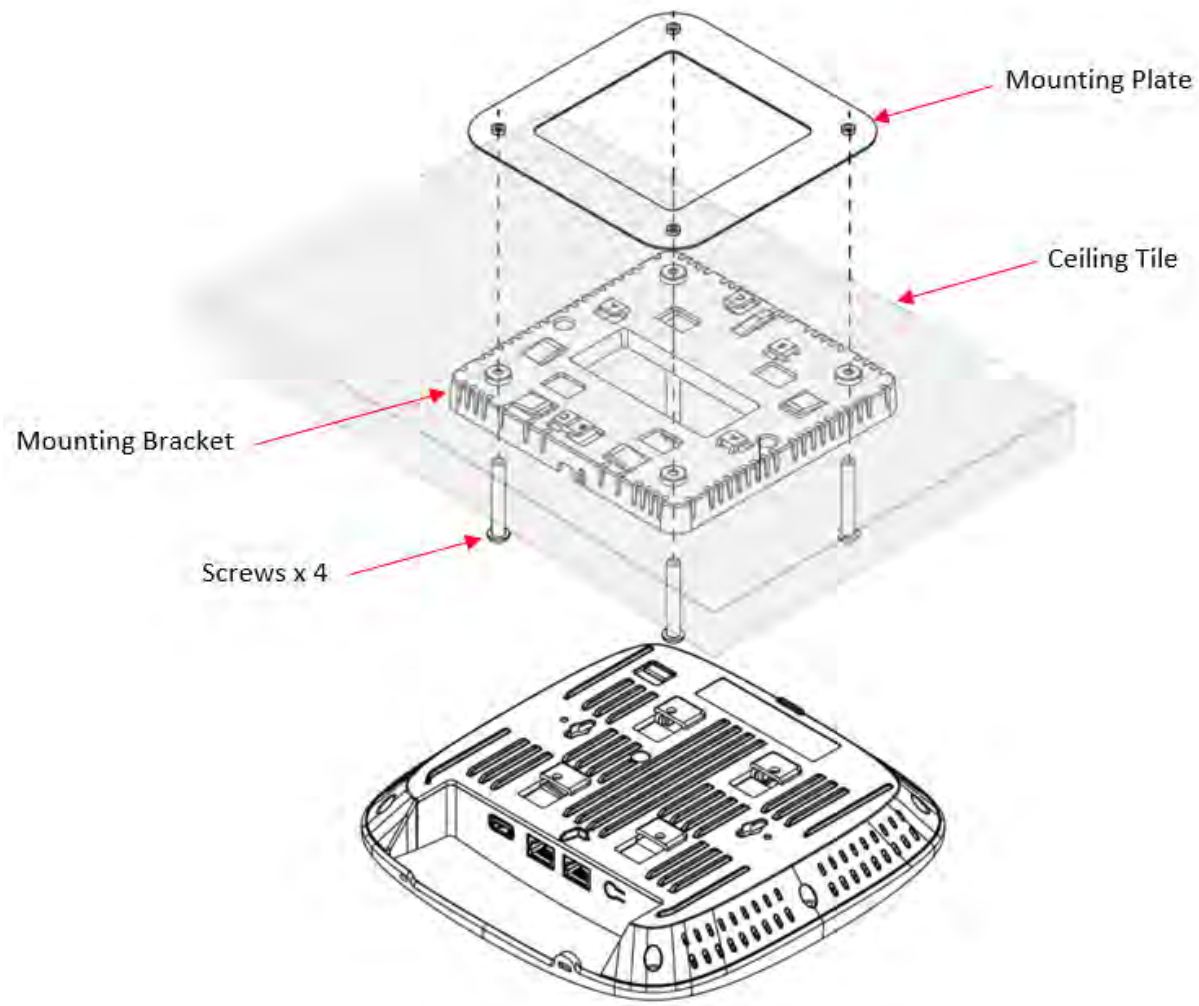

To mount the XE3-4 unit by using the ceiling mount technique, perform the following steps:

1. Determine a place or location where you want to mount the XE3-4 unit.
2. Remove the ceiling tile.
3. Using the hole template, mark the hole locations.
4. Drill the holes for the four mounting screws using a 5mm (3/6”) diameter drill bit.

5. Drill the RJ45 cable hole using a 15 mm (5/8”) diameter bit.
6. Hold the mounting plate on the top side of the ceiling tile and screw it on the mounting bracket.
7. Run the RJ45 cable (s) through the 15mm hole and remount the ceiling tile.
8. Attach the RJ45 cable (s) to XE3-4 unit.
9. Slide XE3-4 unit into the mounting bracket.

Wall mounting

You can mount XE3-4 to any wall by using two screws with corresponding wall anchors. The ceiling mount bracket can be used as a template to align the screws with the unit.

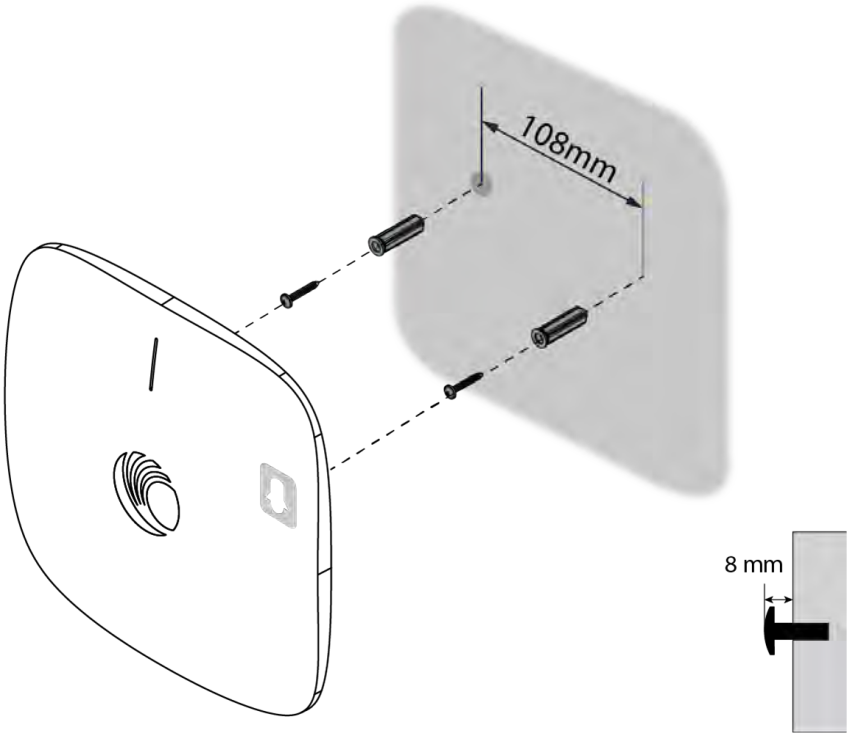

T-bar mounting

38mm T-Bar

The XE3-4 unit can be secured to a 38mm ceiling T-bar rail by using the ceiling mount bracket. The A marking on the bracket must be used for this width T-bar rail.

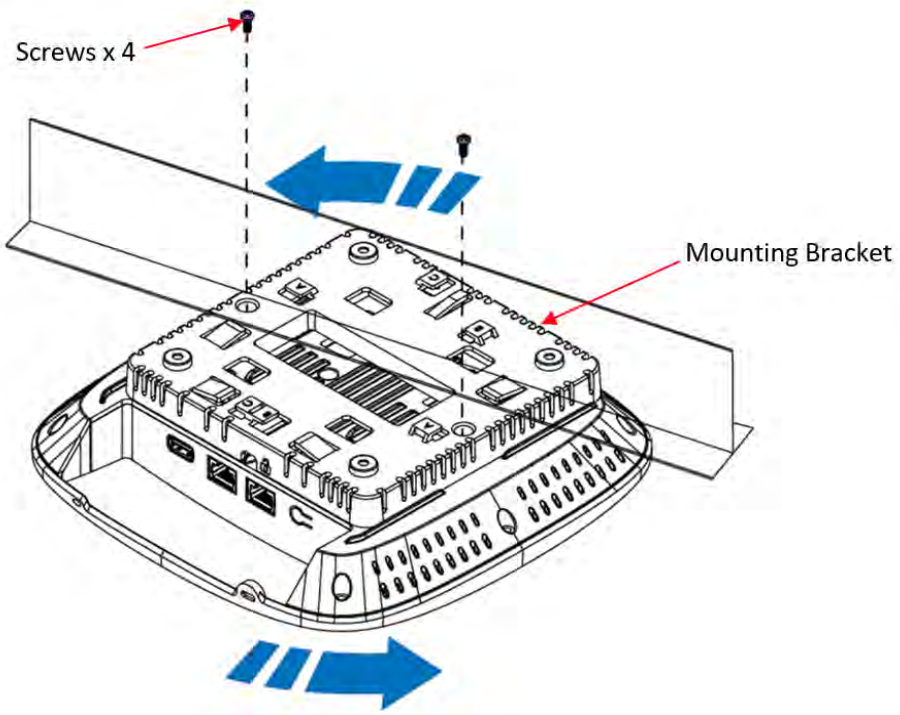

24mm T-Bar

The XE3-4 unit can be mounted to a 24mm width T-bar rail using the clips built into the underside of the unit. The **B** marking on the bracket must be used for this width T-bar rail.

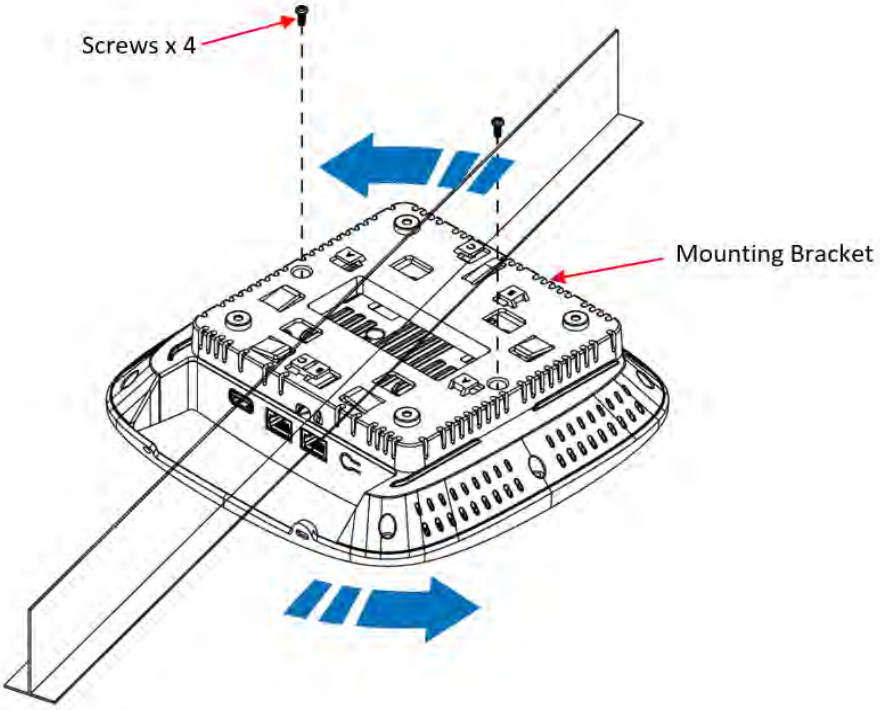

14mm T-Bar

The XE3-4 unit can be mounted to a 14mm width T-bar rail using the clips built into the underside of the unit. The **C** marking on the bracket must be used for this width T-bar rail.

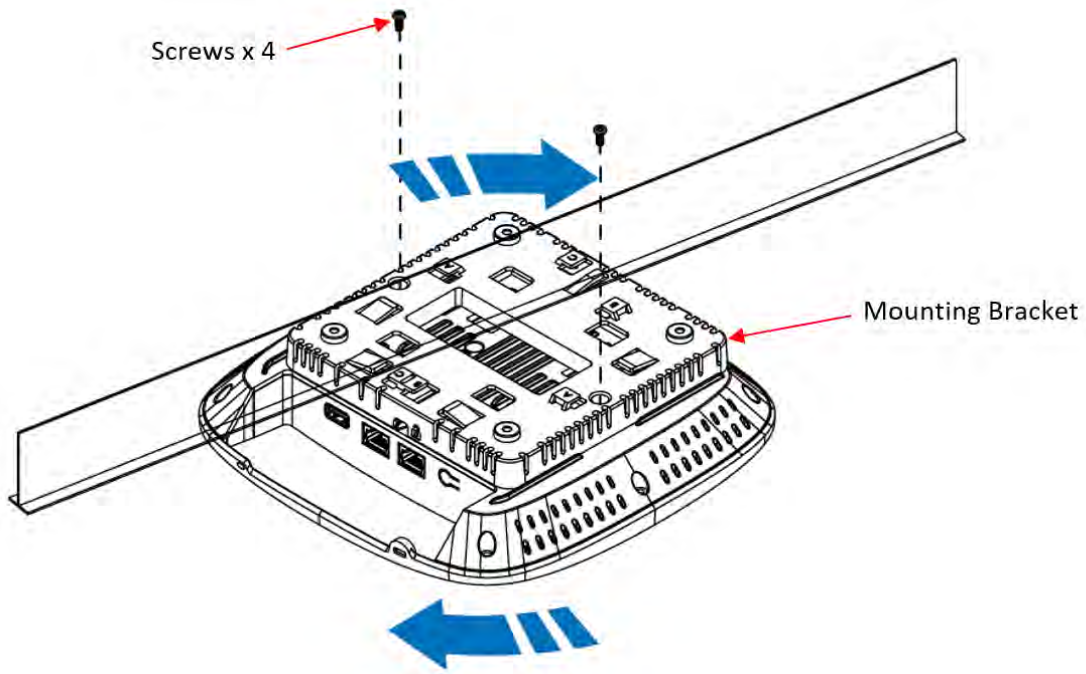

Mounting XE3-4T

The XE3-4T units are mounted by using one of the following mounting techniques:

- Wall mounting, or
- Pole mounting.

Wall mounting with level bracket

The XE3-4T unit can be mounted to any wall by using two screws with corresponding wall anchors. To mount the XE3-4T unit on the wall, perform the following steps:

1. Drill two holes of each Ø6 mm (Ø0.25” Inch) on the wall where you want to mount the XE3-4T AP.

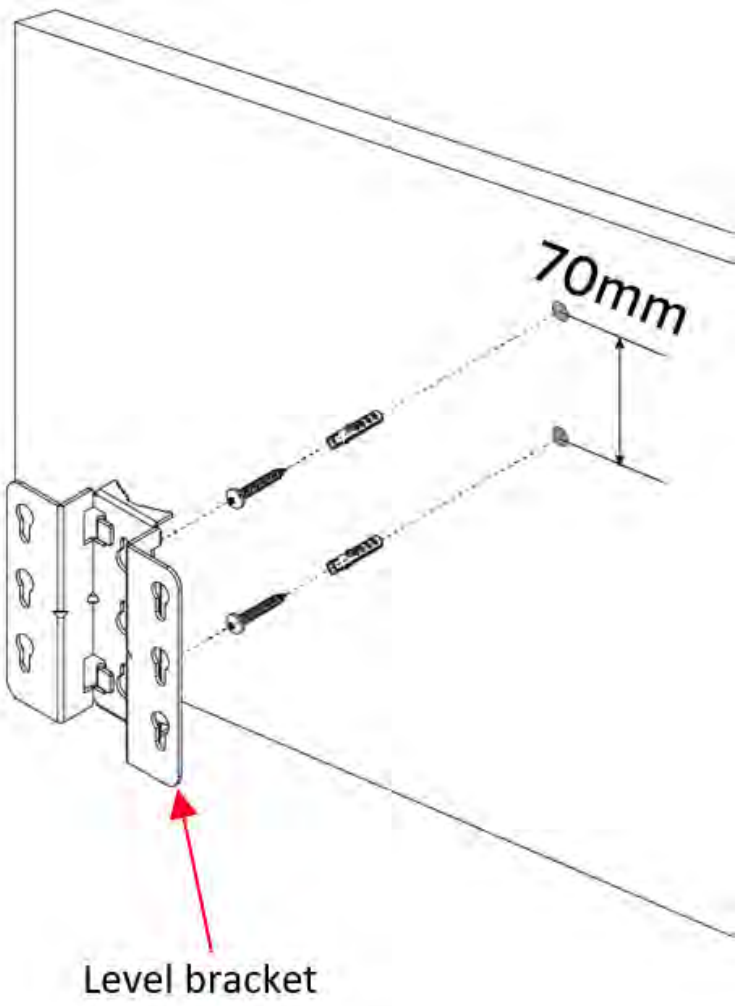

2. Remove the 4 screws from the back side of the AP.

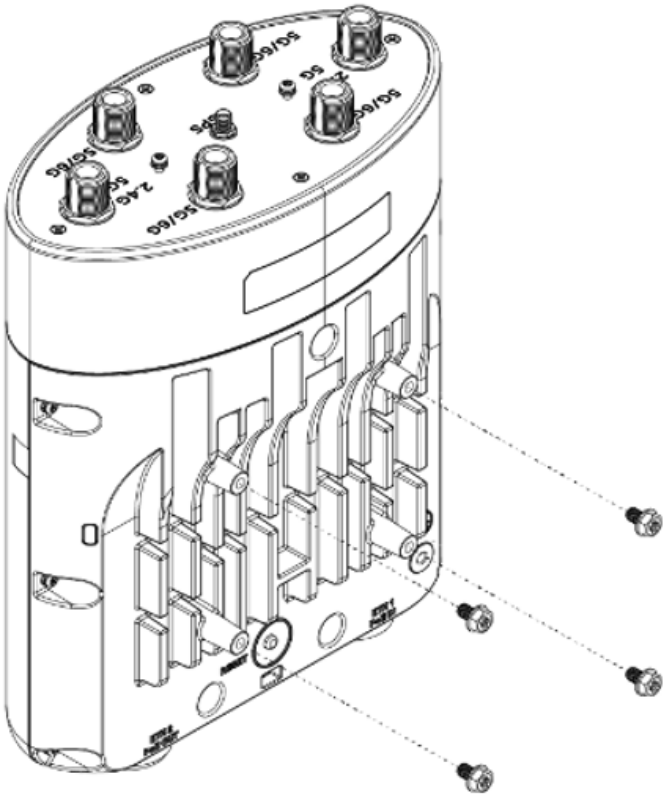

3. Insert the 4 screws through the level bracket and tighten the screw.

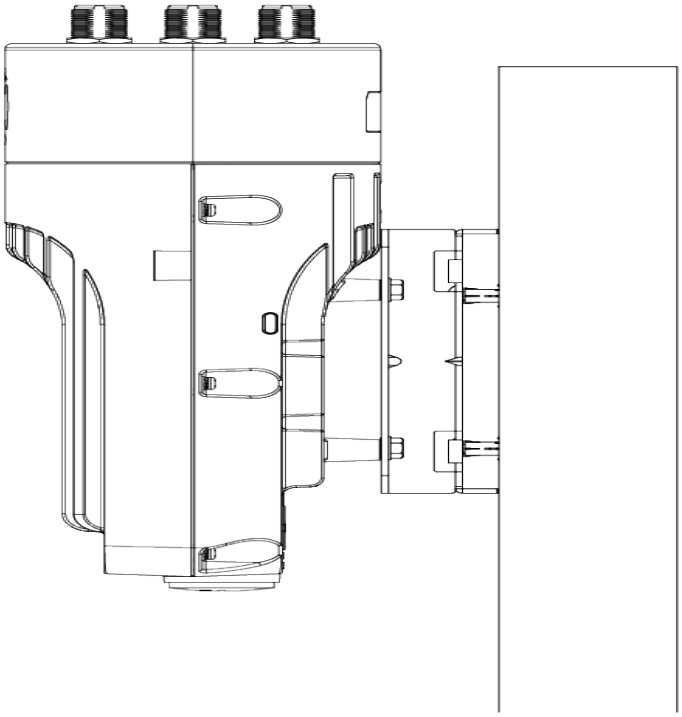

Pole mount with level bracket

To mount the XE3-4T unit on the pole, perform the following steps:

1. Insert the hose mounting clamp though the pole mounting level bracket.

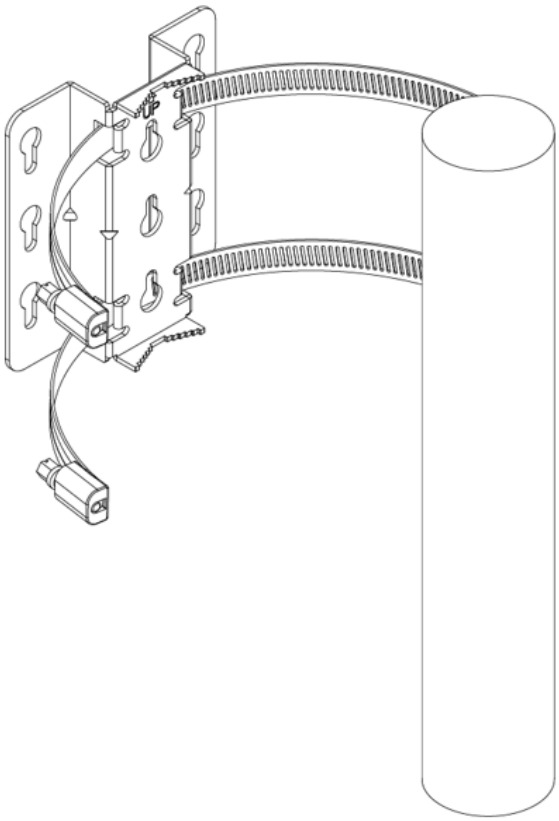

2. Remove the 4 screws from the back side of the AP.

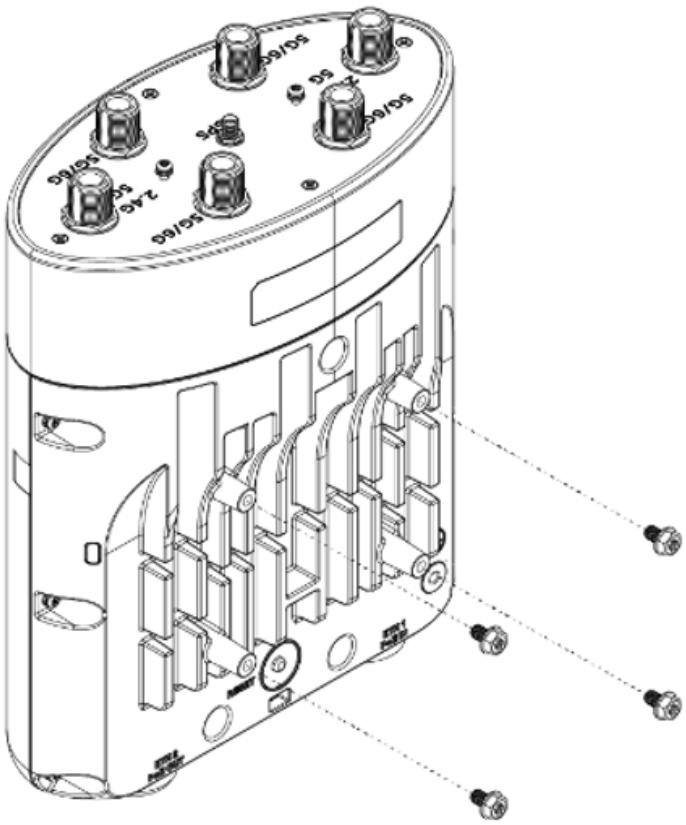

3. Insert the 4 screws through the level bracket and tighten the screw. Fix the clamp to the pole by applying 9.0 Nm torque.

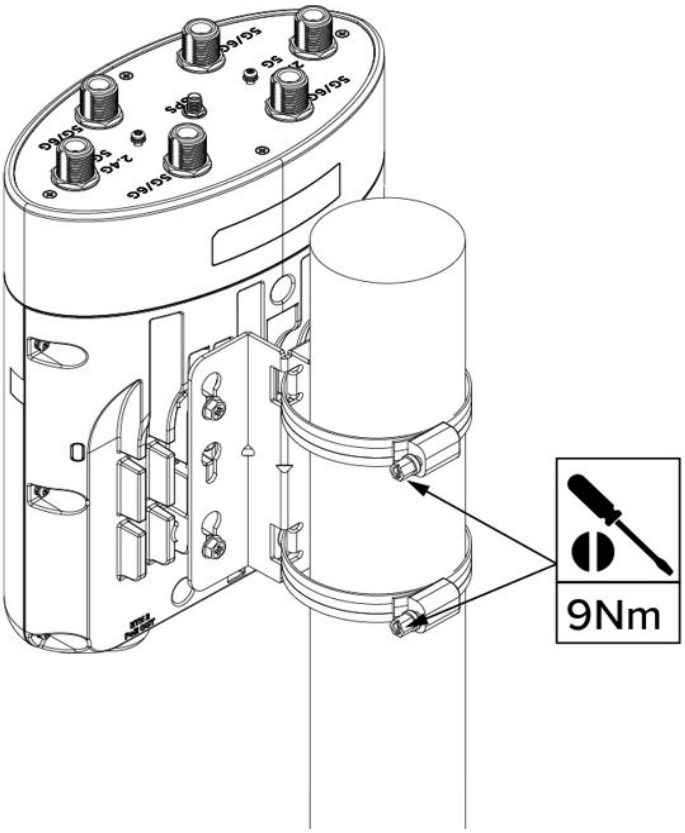
9Nm

Mounting XV2-21X

The XV2-21X units are mounted by using one of the following mounting techniques:

- Ceiling mount,
- Wall mounting, or
- T-bar mounting.

Ceiling mount

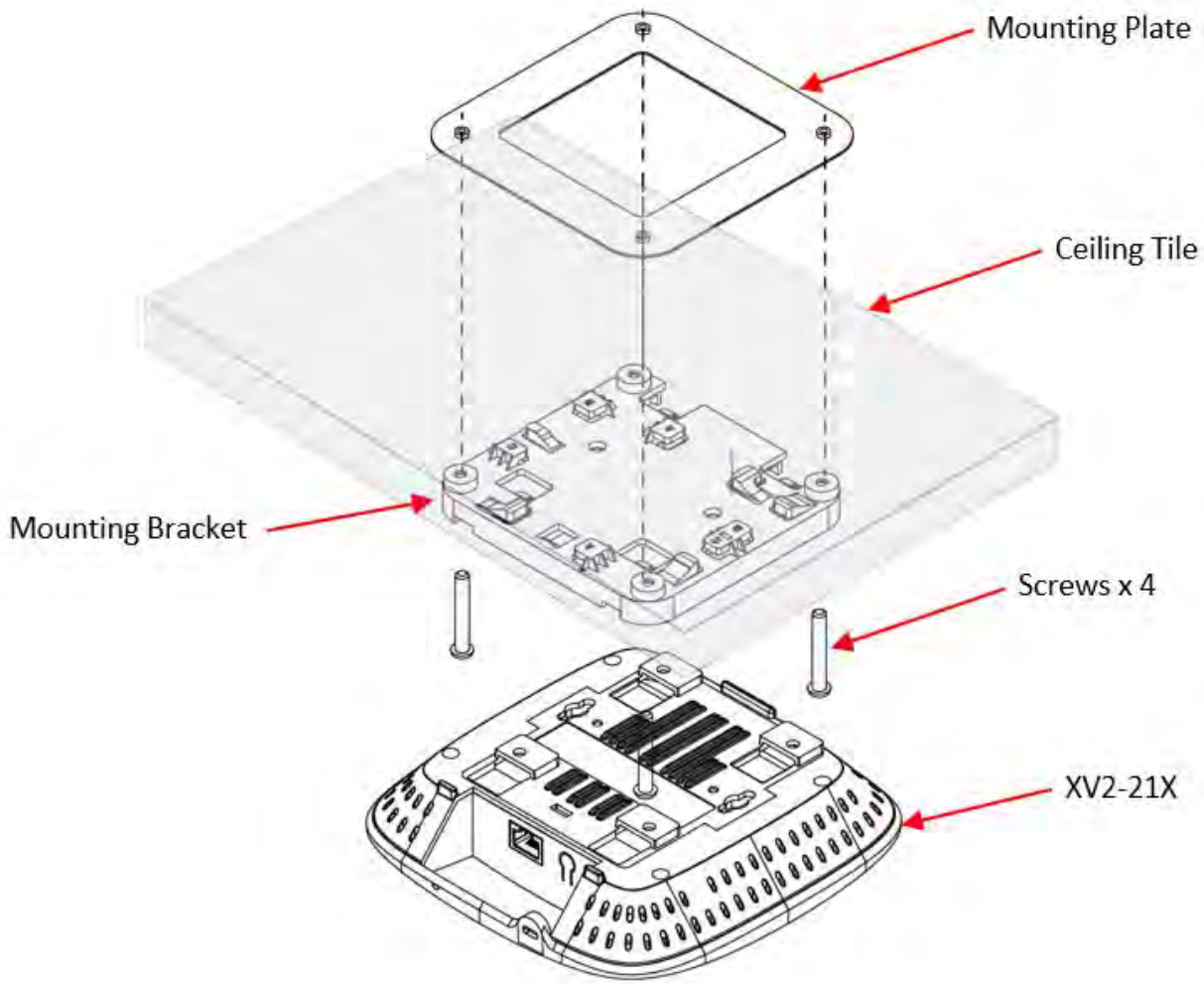

To mount the XV2-21X unit by using the ceiling mount technique, perform the following steps:

1. Determine a place or location where you want to mount the XV2-21X unit.
2. Remove the ceiling tile.
3. Using the hole template, mark the hole locations.
4. Drill the holes for the four mounting screws using a 5mm (3/6”) diameter drill bit.

5. Drill the RJ45 cable hole using a 15 mm (5/8") diameter bit.
6. Hold the mounting plate on the top side of the ceiling tile and screw it on the mounting bracket.
7. Run the RJ45 cable (s) through the 15mm hole and remount the ceiling tile.
8. Attach the RJ45 cable (s) to XV2-21X unit.
9. Slide the XV2-21X unit into the mounting bracket.

Wall mounting

You can mount XV2-21X to any wall by using two screws with corresponding wall anchors. The ceiling mount bracket can be used as a template to align the screws with the unit.

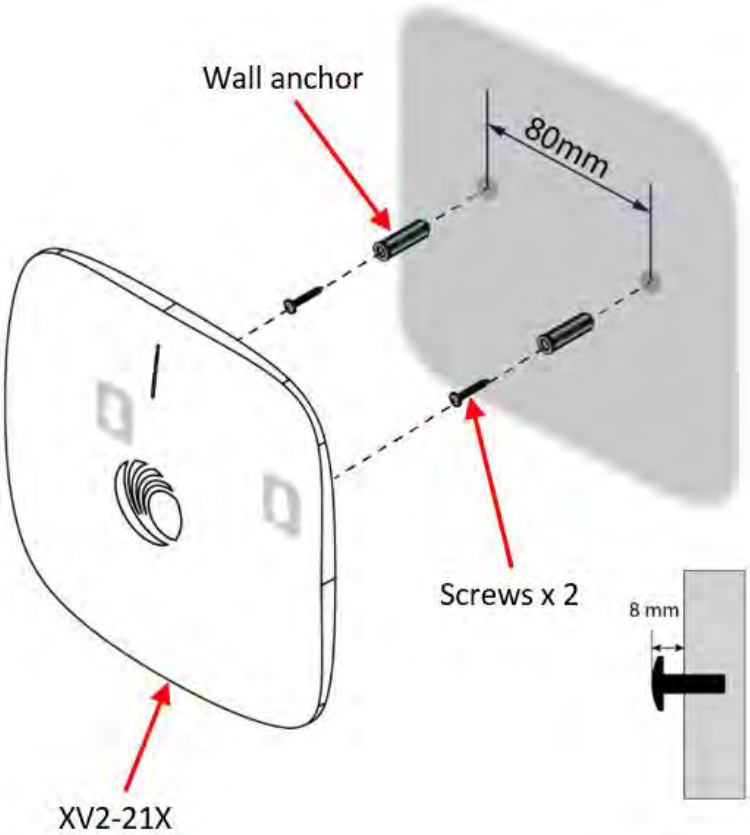

T-bar mounting

38mm T-Bar

The XV2-21X unit can be secured to a 38mm ceiling T-bar rail by using the ceiling mount bracket. The A marking on the bracket must be used for this width T-bar rail.

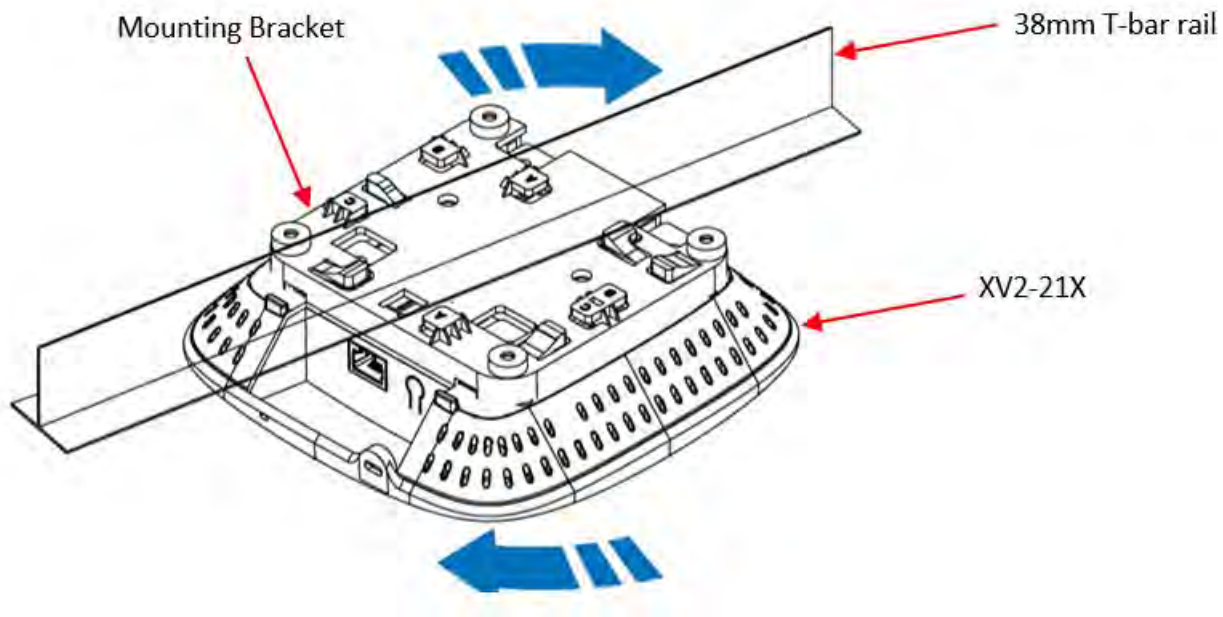

24mm T-Bar

The XV2-21X unit can be mounted to a 24mm width T-bar rail using the clips built into the underside of the unit. The **B** marking on the bracket must be used for this width T-bar rail.

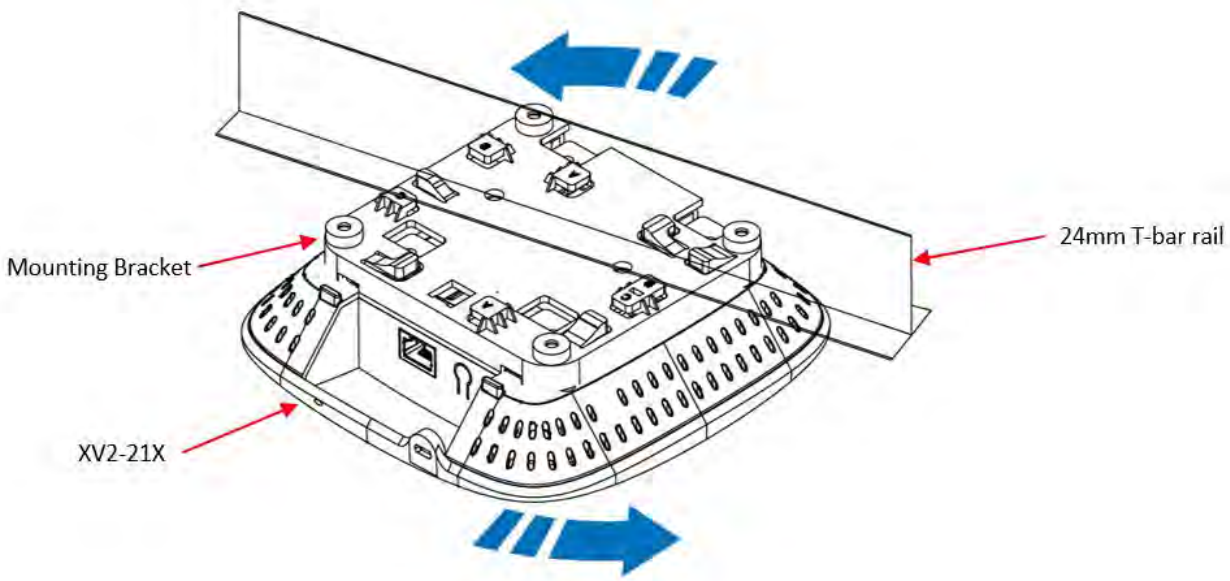

14mm T-Bar

The XV2-21X unit can be mounted to a 14mm width T-bar rail using the clips built into the underside of the unit. The **C** marking on the bracket must be used for this width T-bar rail.

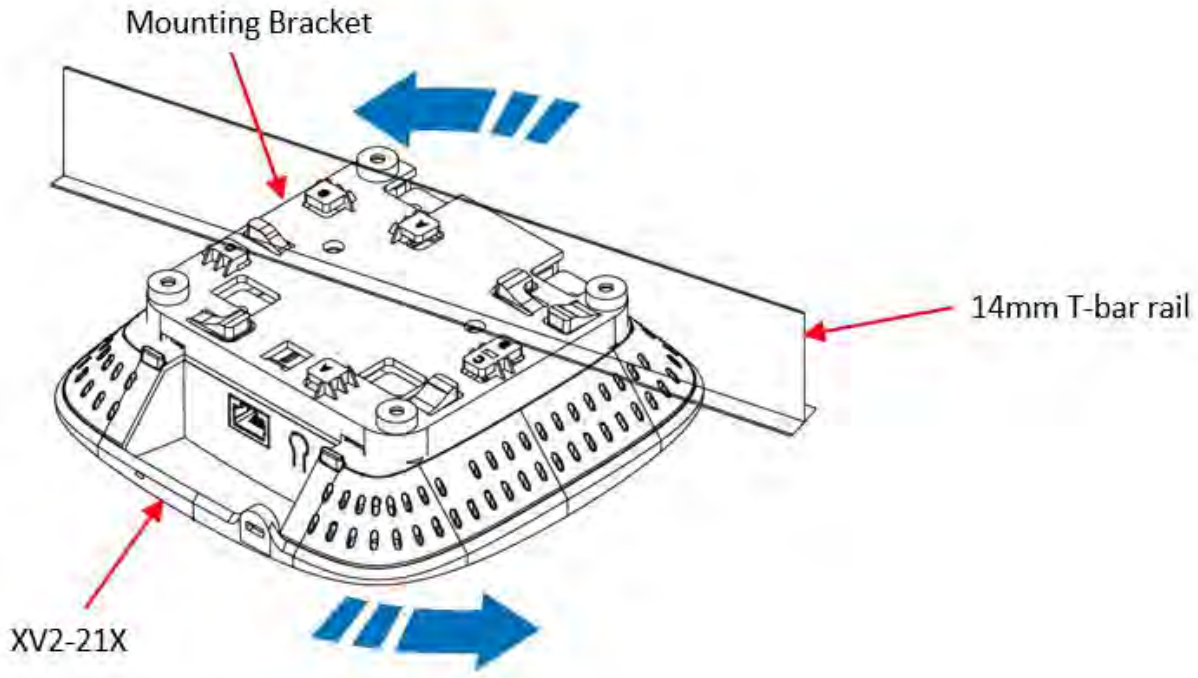
Mounting Bracket
14mm T-bar rail
XV2-21X

Mounting XV2-23T

The XV2-23T units are mounted by using one of the following mounting techniques:

- Pole mount, or
- Wall mounting

Pole mount

1. Insert hose clamps through pole mounting bracket and clamp to pole by applying 6.0 Nm torque.

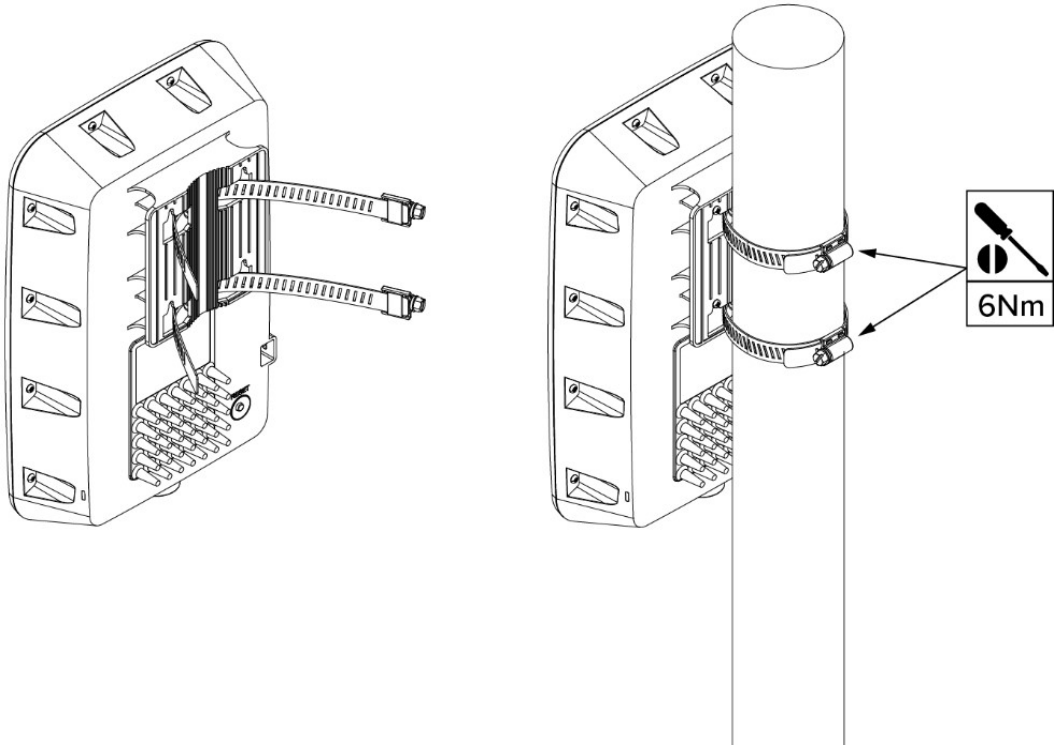

2. Insert RJ45 cable into cable gland, and connect the cable to the device.

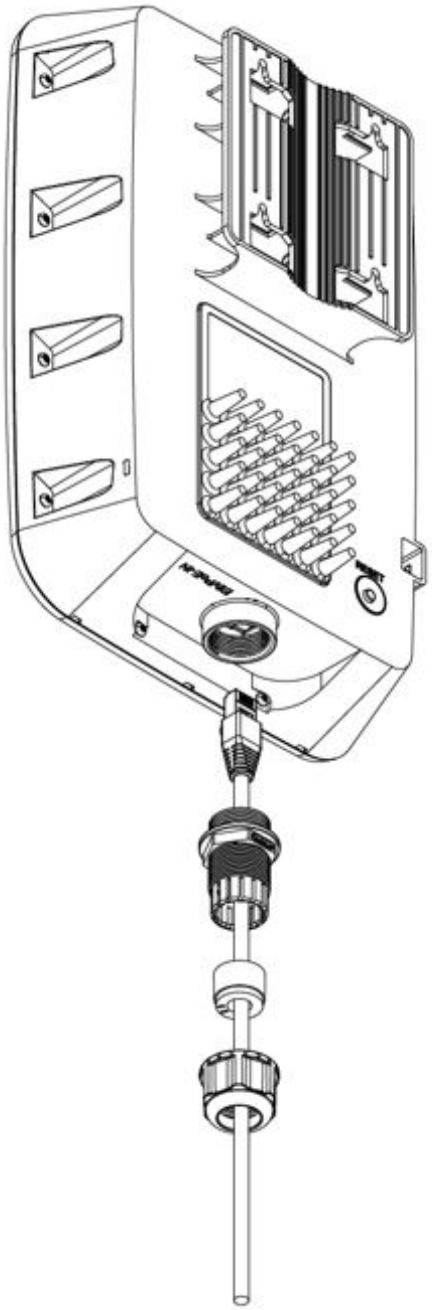

3. Lock cable gland to radio housing and tighten the cable gland.

Wall mounting

1. Drill 4 holes of Ø6mm (Ø0.25” Inch) on wall.
2. Press fit plastic anchor and assembly fastener.

3. Leave 5mm to 6mm gap between wall and fastener head.
4. Use the four mounting slots given on the back of the radio to mount to the wall.

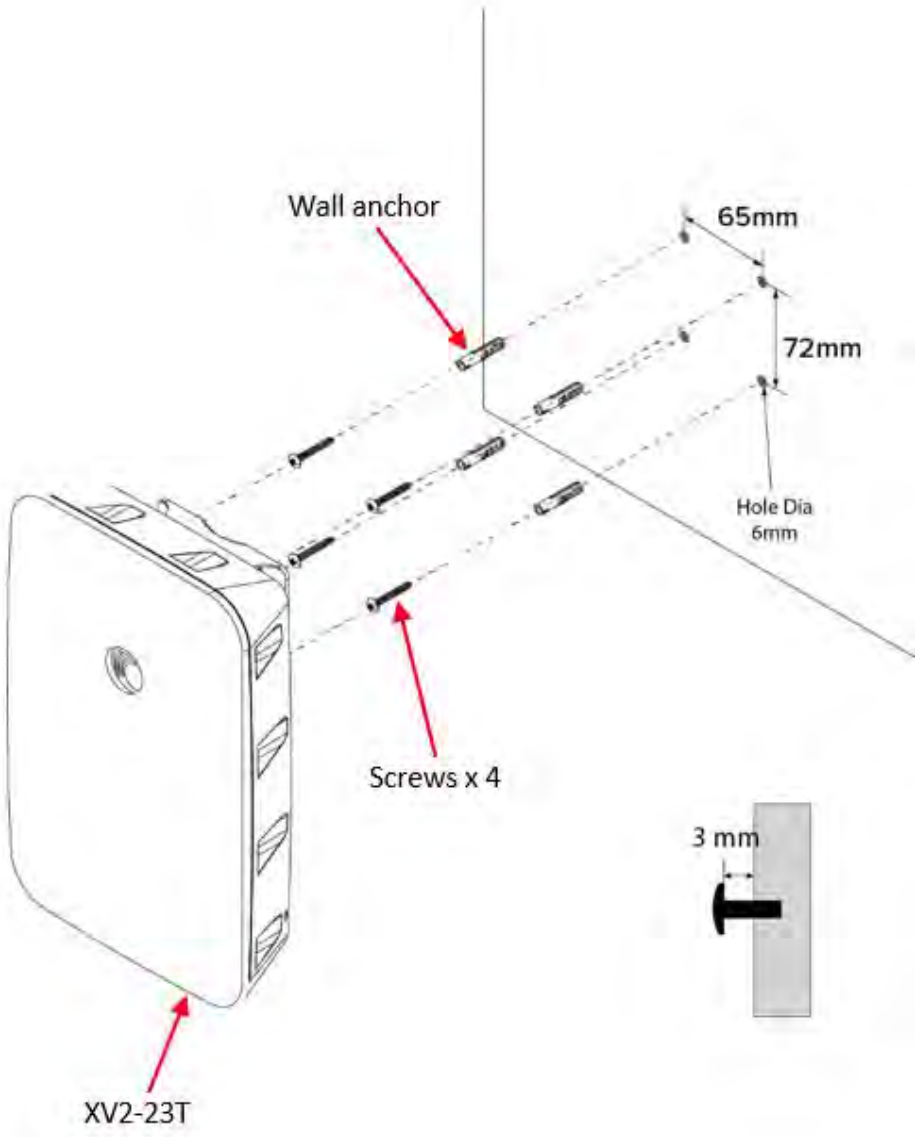

Mounting XV2-22H

The XV2-22H units are mounted by using one of the following mounting techniques:

- Single gang mounting, or
- Wall mounting

Single gang mounting

1. Place single-gang wall bracket on the gang box and secure with at least 2 screws.
2. Connect the Ethernet cable to the upper RJ-45 port labeled Eth1/PoE at the rear side of XV2-22H to provide connectivity. Use the other RJ-45 port labeled Pass-Through for any additional cable that might need to pass through XV2-22H.
3. Align the two slots on the rear side of the XV2-22H with two hooks on the bracket.
4. Secure XV2-22H to the bracket with a screw at the bottom edge of XV2-22H using a standard Torx security screw or standard Philips head screw.

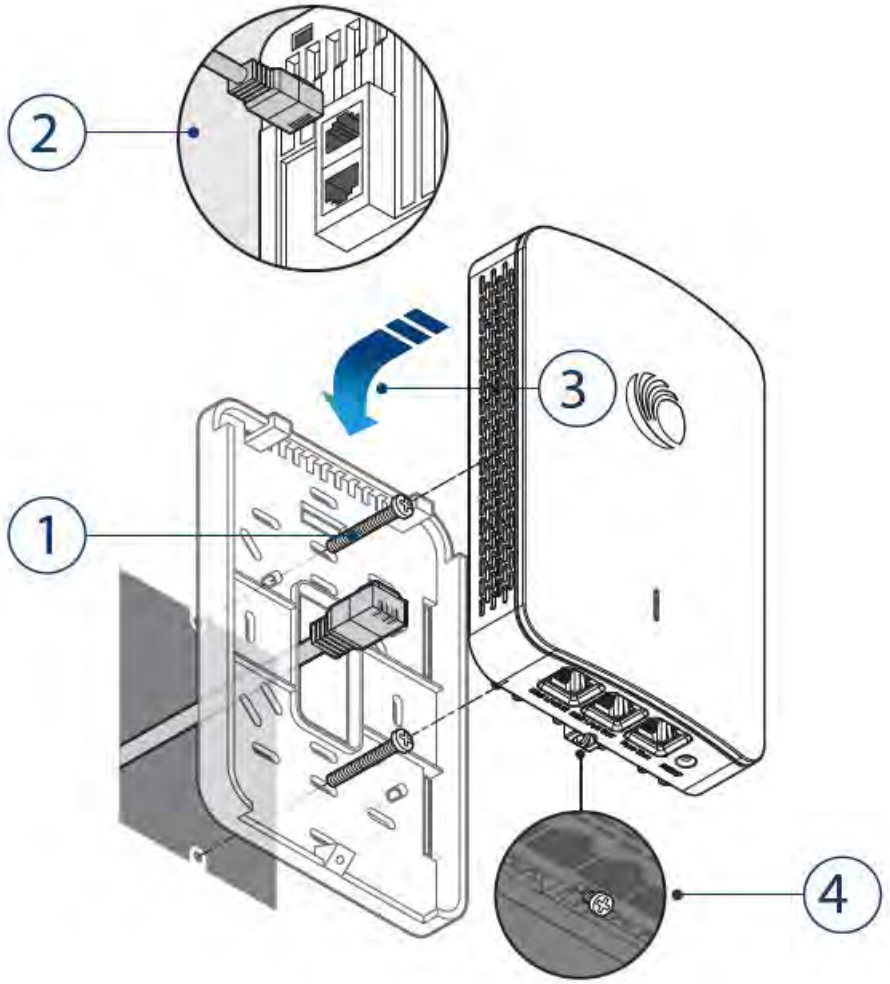

Wall mounting

1. Choose location on the wall to mount the bracket using the four mounting screws and anchors (if needed).
2. Connect the short Ethernet jumper cable between the two RJ-45 connections on the rear side of XV2-22H.
3. Mount XV2-22H into the generic wall bracket by aligning the hooks.
4. Secure XV2-22H to the bracket using Torx (or standard) screw on the lower edge of XV2-22H.
5. Power XV2-22H either with a 48VDC/1A power adapter or using the PASS-THRU port at the bottom edge of the device using Ethernet power.

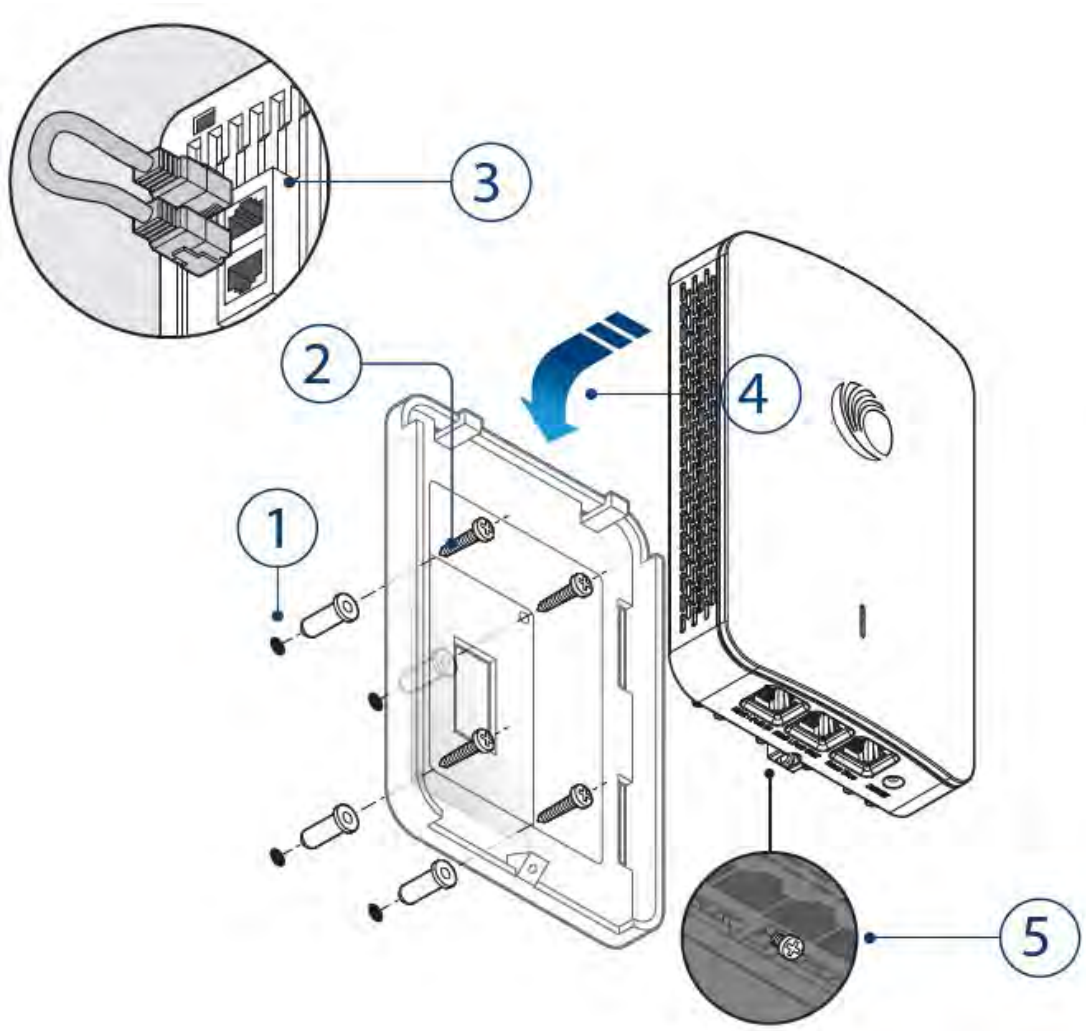

Cambium Networks

Cambium Networks delivers wireless communications that work for businesses, communities, and cities worldwide. Millions of our radios are deployed to connect people, places, and things with a unified wireless fabric that spans multiple standards and frequencies of fixed wireless and Wi-Fi, all managed centrally via the cloud. Our multi-gigabit wireless fabric offers a compelling value proposition over traditional fiber and alternative wireless solutions. We work with our Cambium certified Connected Partners to deliver purpose built networks for service provider, enterprise, industrial, and government connectivity solutions in urban, suburban, and rural environments, with wireless that just works.

Support website	https://support.cambiumnetworks.com
Support enquiries	
Technical training	https://learning.cambiumnetworks.com/learn
Main website	http://www.cambiumnetworks.com
Sales enquiries	solutions@cambiumnetworks.com
Warranty	https://www.cambiumnetworks.com/support/standard-warranty/
Telephone number list	http://www.cambiumnetworks.com/contact-us/
User Guides	http://www.cambiumnetworks.com/guides
Address	Cambium Networks Limited, Unit B2, Linhay Business Park, Eastern Road, Ashburton, Devon, TQ13 7UP United Kingdom

Cambium Networks™ www.cambiumnetworks.com

Cambium Networks and the stylized circular logo are trademarks of Cambium Networks, Ltd. All other trademarks are the property of their respective owners.

Copyright © 2022 Cambium Networks, Ltd. All rights reserved.

Cambium Networks™

XE3-4T Wi-Fi 6E Outdoor Access Point, External Antenna

Intended Use (United Kingdom (UK))

The enterprise Wi-Fi products from Cambium Networks are intended for delivering outdoor wireless LAN data services. XE3-4T is a tri-radio device with an external antenna. The 802.11ax standard is more efficient than previous generations, providing performance enhancements, network segmentation, and improved battery life.

https://www.cambiumnetworks.com/guides
https://learning.cambiumnetworks.com
https://support.cambiumnetworks.com
https://www.cambiumnetworks.com/support/standard-warranty/

Cambium Networks Ltd, Unit B2 Linhay Business Park, Eastern Road
Ashburton, Devon, TQ13 7UP, United Kingdom

Model#: XE3-4T

Connecting what matters

www.cambiumnetworks.com

P021325v1

pmp-3432

Installation and operation (UK)

Installation and operation of this product are complex, therefore Cambium Networks recommends professional installation and management of the system to ensure that the operation complies with UK regulations. Follow the instructions described in this leaflet. Further guidance on installation and operation is available in the product's user guide. See links on the front page.

An installer must have sufficient skills, knowledge, and experience to perform the installation task. The installer is responsible for:
- Familiarizing with current applicable national regulations, including radio regulations, electrical installation regulations, and surge protection regulations.
- Installing in accordance with Cambium Networks instructions.
- Confirming that the equipment settings are compliant with national or regional regulations.

To ensure the equipment's compliance with the national regulatory regulations, consider the following instructions during the installation:
- Ensure that the XE-Series equipment is running the latest 6.x firmware version. The software is available on the Cambium Networks Support Centre web site.
- During equipment set-up, verify that the correct region code is set (the region code is pre-set in the factory for EU products) and then select the correct country code for the particular country where the product is being deployed.

Changes or modifications, which are not expressly approved by Cambium Networks, could void the user's authority to operate the equipment and may void the manufacturer's warranty.

Product safety information

Observe the following safety rules:
- Always power down and unplug the equipment before servicing. The power supply is the primary disconnect device. There are no serviceable parts inside this equipment.
- Always turn off the power of the XE-Series device before undertaking maintenance activities in front of the antenna. Before turning off the power, perform the following actions:
  - Observe the minimum safe distance limit for the XE-Series products provided below.
  - Ensure that the equipment is installed in a position avoiding any radiation hazard.
- It is the user's responsibility to install the equipment in accordance with national regulations. It is recommended that installation must be contracted to a professional installer.
- Always use the specified XE-Series platform's power supply unit (PSU), an UL Listed Power Adapter or DC power source marked as "L.P.S" (or "Limited Power Source"), rated 42.5-57Vdc, 60W, Gigabit Passive PoE injector, 802.3af/at/bt, Tma=65 degree C, to power the equipment. Failure to use the Cambium Networks supplied PSU with ratings that are specified on the equipment label may result in improper operation, damage to equipment and cause a safety or fire hazard.
- Always install the cables recommended by Cambium Networks and consider the following instructions:
  - Use a power cord, with an integral safety ground wire, intended for connection to a grounded safety outlet.
  - Protective bonding must be installed in accordance with local national wiring rules and regulations.
- The indoor unit enclosure may be hot to touch during operation.
- Contact your local supplier to get more information about the power supply/adapter.
- If a Class I PoE adapter or switch is used to provide power, ensure that the power cord is firmly plugged into the socket and confirm the main earth connection.

Operation in the UK (UK CA)

Frequency bands, maximum operating power, a safe distance

In the UK, the 2.4/5/6 GHz tri-band XE-Series products operates in the following frequency bands up to the maximum power:

Operating frequency band	UK standard	Maximum power limit (EIRP)	Permitted usage	Units that support the operating frequency band
2400 - 2483.5 MHz	EN 300 328	100 mW / 20 dBm	Available for general usage within the UK	All XV \ XE Series
5150 - 5350 MHz	EN 301 893	200 mW / 23 dBm		All XV \ XE Series
5470 - 5725 MHz	EN 301 893	1 W / 30 dBm		All XV \ XE Series
5725 - 5850 MHz	EN 302 502	4 W / 36 dBm		All XV \ XE Series

* Note: UK operation in the 5.8 GHz frequency band is in accordance with UK Interface Requirement 2007, Fixed Broadband Services operating in the 5725 - 5850 MHz band.

For the XE-Series products deployed in the UK, the minimum safe distance between the equipment and the humans is 24 cm. The device is restricted to indoor use only when operating with 5150 to 5350 MHz and 5945 to 6425 MHz frequency ranges.

Restrictions and requirements for authorization and use

- This equipment is for outdoor use only.
- The XE-Series products can be configured to operate in unlicensed frequency bands, which are subject to frequency planning within individual countries. Operators or end users must ensure that the equipment is installed and operated in accordance with the regulations applicable to the country of operation.
- Use only with the specified XE-Series platform power supply unit (PSU), an UL Listed Power Adapter, or DC power source marked as "L.P.S" (or "Limited Power Source"), rated 42.5-57Vdc, 60W, Gigabit Passive PoE injector, 802.3af/at/bt, and Tma=65 degree C.

Simplified UKCA Declaration of Conformity

Hereby, the manufacturer Cambium Networks Ltd, declares that the radio equipment type XE3-4T s in compliance with UK Radio Equipment Regulations 2017 (SI 2017 No. 1206, as amended). The full text of the UKCA declaration of conformity is available at the following internet address: http://www.cambiumnetworks.com/ukca_dofc.

Waste Electrical and Electronic Equipment (WEEE) Regulations 2013 No 3113

Do not dispose electronic and electric equipment or electronic and electric accessories with your household waste. Please contact your local equipment supplier representative or Cambium Networks Support Centre for information about the waste collection system in the UK.

Intended Use (EU IE NO)

The enterprise Wi-Fi products from Cambium Networks are intended for delivering outdoor wireless LAN data services. XE3-4T is a tri-radio device with an external antenna. The 802.11ax standard is more efficient than previous generations, providing performance enhancements, network segmentation, and improved battery life.

Installation and operation

Installation and operation of this product are complex, therefore Cambium Networks recommends professional installation and management of the system to ensure that the operation complies with UK regulations. Follow the instructions described in this leaflet. Further guidance on installation and operation is available in the product's user guide. See links on the front page.

An installer must have sufficient skills, knowledge and experience to perform the installation task and is responsible for:
- Familiarizing with current applicable national regulations including radio regulations, electrical installation regulations and surge protection regulations.
- Installation in accordance with Cambium Networks instructions.
- Confirming that the equipment settings are compliant with national or regional regulations.

To ensure the equipment's compliance with the national regulatory regulations, consider the following instructions during the installation:
- Ensure that XE-Series equipment is running the latest 6.x firmware version. The software is available on the Cambium Networks Support Centre web site.
- During equipment set-up, verify that the correct region code is set (the region code is pre-set in the factory for EU products) and then select the correct country code for the particular country where the product is being deployed.

Changes or modifications, which are not expressly approved by Cambium Networks, could void the user's authority to operate the equipment and will void the manufacturer's warranty.

Product safety information

Observe the following safety rules:
- Always power down and unplug the equipment before servicing. The power supply is the primary disconnect device. There are no serviceable parts inside this equipment.
- Always turn off the power of the XE-Series device before undertaking maintenance activities in front of the antenna. Before turning off the power, perform the following actions:
  - Observe the minimum safe distance limit for the XE-Series products provided below.
  - Ensure that the equipment is installed in a position avoiding any radiation hazard.
- It is the user's responsibility to install the equipment in accordance with national regulations. It is recommended that installation must be contracted to a professional installer.
- Always use the specified XE-Series platform's power supply unit (PSU), an UL Listed Power Adapter or DC power source marked as "L.P.S" (or "Limited Power Source"), rated 42.5-57Vdc, 60W, Gigabit Passive PoE injector, 802.3af/at/bt, Tma=65 degree C, to power the equipment. Failure to use the Cambium Networks supplied PSU with ratings that are specified on the equipment label may result in improper operation, damage to equipment and cause a safety or fire hazard.
- Always install the cables recommended by Cambium Networks and consider the following instructions:
  - Use a power cord, with an integral safety ground wire, intended for connection to a grounded safety outlet.
  - Protective bonding must be installed in accordance with local national wiring rules and regulations.
- The indoor unit enclosure may be hot to touch during operation.
- Contact your local supplier to get more information about the power supply/adapter.
- If a Class I PoE adapter or switch is used to provide power, ensure that the power cord is firmly plugged into the socket and confirm the main earth connection.

Operation in the EU (CE)

Frequency bands, maximum operating power, a safe distance

In the EU, the 2.4/5/6 GHz tri-band XE-Series products operates in the following frequency bands up to the maximum power:

Operating frequency band	EU standard	Maximum power limit (EIRP)	Permitted usage	Units that support the operating frequency band
2400 - 2483.5 MHz	EN 300 328	100 mW / 20 dBm	Available for general usage within all EU nations	All XV \ XE Series
5150 - 5350 MHz	EN 301 893	200 mW / 23 dBm		All XV \ XE Series
5470 - 5725 MHz	EN 301 893	1 W / 30 dBm		All XV \ XE Series
5725 - 5850 MHz	EN 302 502	4 W / 36 dBm		All XV \ XE Series

Note: UK operation in the 5.8 GHz frequency band is in accordance with UK Interface Requirement 2007, Fixed Broadband Services operating in the 5725 - 5850 MHz band.

For the XE-Series products that are deployed in the EU, the minimum safe distance between the equipment and the humans is 24 cm. The device is restricted to indoor use only when operating with 5150 to 5350 MHz and 5945 to 6425 MHz frequency ranges.

Restrictions and requirements for authorization and use

- This equipment is for outdoor use only.
- The XE-Series products can be configured to operate in unlicensed frequency bands, which are subject to frequency planning within individual countries. Operators or end users must ensure that the equipment is installed and operated in accordance with the regulations applicable to the country of operation.
- Use only with the specified XE-Series platform power supply unit (PSU), an UL Listed Power Adapter, or DC power source marked as "L.P.S" (or "Limited Power Source"), rated 42.5-57Vdc, 60W, Gigabit Passive PoE injector, 802.3af/at/bt, and Tma=65 degree C.

EU Responsible Person – Cambium Networks Europe B.V. Schiphol Boulevard 359, 1118 BJ Schiphol, Netherlands.

Simplified EU Declaration of Conformity

Hereby, the manufacturer Cambium Networks Ltd, declares that the radio equipment type XE3-4T is in compliance with Directive 2014/53/EU. The full text of the EU declaration of conformity is available at the following internet address: http://www.cambiumnetworks.com/eu_dofc.

Waste Electrical and Electronic Equipment (WEEE) Directive 2012/19/EU

Do not dispose Electronic and Electric Equipment or Electronic and Electric Accessories with your household waste. In some countries or regions, collection systems have been set up to handle waste of electrical and electronic equipment. In European Union countries, contact your local equipment supplier representative or Cambium Networks Support Centre for information about the waste collection system in your country.

Určení (CZ)

Wi-Fi produkty podnikové úrovně od společnosti Cambium Networks jsou určeny k zajišťování bezdrátových datových sítí LAN v venkovní. XE3-4T je tři rádio zařízení s vnitřními anténami. Standard 802.11ax je účinnější než jeho předchozí generace. Poskytuje vyšší výkon, umožňuje segmentaci sítě a nabízí delší výdrž při provozu na baterie.

Instalace a provoz

Instalace a provoz tohoto zařízení jsou poměrně komplexní. Společnost Cambium Networks tedy doporučuje odbornou montáž a správu systému, která mimo jiné zajistí soulad provozu s platnými předpisy regionu, kde se zařízení provozuje. Dodržujte pokyny uvedené v tomto letáku. Další pokyny ohledně instalace a provozu naleznete v uživatelské příručce k zařízení, viz odkazy níže.
Pracovník zajišťující montáž musí být dostatečně kvalifikovaný a je zodpovědný za:
- Znalost příslušných platných národních předpisů včetně předpisů o rádiovém provozu, elektrických instalacích a ochraně proti přepětí
- Montáž podle pokynů společnosti Cambium Networks.
- Ověření souladu nastavení zařízení s národními a regionálními předpisy.

Během montáže dodržujte uvedené pokyny. Zajistíte tím soulad zařízení s národními předpisy.
- Ujistěte se, že zařízení řady XE používá nejnovější verzi firmwaru 6.x. Software je k dispozici na stránce centra podpory Cambium.
- Při nastavování zařízení zkontrolujte správnost kódu regionu (u produktů z EU se kód regionu přednastavuje při výrobě) a pak podle umístění zařízení nastavte správný kód země.

Úpravy nebo změny, které nejsou výslovně schváleny společností Cambium Networks, by mohly způsobit, že uživatel již nebude oprávněn zařízení provozovat, a zneplatnit záruku výrobce.

Bezpečnostní informace k produktu

Dodržujte tyto bezpečnostní pokyny:
- Před servisními zásahy vždy zařízení vypněte a odpojte. Odpojení se provádí primárně prostřednictvím napájecího zdroje .
- Zařízení neobsahuje žádné opravitelné součásti.
- Zapnutý vysílač vydává v blízkosti antény silné radiofrekvenční záření. Před prováděním údržby v prostoru před anténou vždy zařízení řady XE vypněte.
  - U produktů řady XE dodržujte níže uvedenou minimální bezpečnou vzdálenost.
  - Umístěte zařízení tak, abyste škodlivému záření nikoho nevystavili.
- Za instalaci v souladu s národními předpisy zodpovídá uživatel. Instalaci doporučujeme svěřit odborníkům.
- Vždy používejte specifikovanou platformu napájecího zdroje (PSU) řady XE, napájecí adaptér uvedený v UL nebo zdroj stejnosměrného proudu označený „L.P.S" (nebo „Limited Power Source"), jmenovitý 42,5–57 V DC, 60 W, gigabitový pasivní PoE injektor, 802.3af /at/bt, Tma=65 stupňů C, k napájení zařízení. Nepoužití napájecího zdroje dodávaného společností Cambium Networks se jmenovitými hodnotami uvedenými na štítku zařízení může mít za následek nesprávný provoz, poškození zařízení a způsobit bezpečnostní riziko nebo nebezpečí požáru.
- Vždy používejte kabely doporučené společností Cambium.
  - Pokud zařízení připojujete k zásuvce s uzemněným kolíkem, použijte napájecí kabel se zemnicím vodičem.
  - Ochranné pospojování je nutné provést v souladu s vnitrostátními pravidly a předpisy.
- Kryt interiérové jednotky může být při provozu horký.

Provoz v EU (CE)

Frekvenční pásma, maximální provozní výkon, bezpečná vzdálenost

V EU se dvoupásmová zařízení 2.4 GHz / 5 GHz / 6 GHz řady XE provozují v těchto frekvenčních pásmech a s uvedeným maximálním provozním výkonem:

Provozní frekvenční pásmo	Standard EU	Maximální povolený výkon (EIRP)	Povolené užití	Jednotky, které podporují toto frekvenční pásmo
2400 - 2483.5 MHz	EN 300 328	100 mW / 20 dBm	K dispozici pro všeobecné použití ve všech zemích EU	All XV \ XE Series
5150 - 5350 MHz	EN 301 893	200 mW / 23 dBm		All XV \ XE Series
5470 - 5725 MHz	EN 301 893	1 W / 30 dBm		All XV \ XE Series
5725 - 5850 MHz	EN 302 502	4 W / 36 dBm		All XV \ XE Series

Poznámka: Provoz ve Spojeném království ve frekvenčním pásmu 5,8 GHz je v souladu s britským požadavkem na rozhraní z roku 2007, Pevné širokopásmové služby pracující v pásmu 5725 - 5850 MHz.

U zařízení řady XE instalovaných v EU je minimální bezpečná vzdálenost mezi zařízením a osobami 24 cm. Zařízení je omezeno na použití ve vnitřních prostorách při provozu ve frekvenčním rozsahu 5150 až 5350 MHz a 5945 až 6425 MHz.

Omezení a požadavky na povolení k použití

- Toto zařízení je určené pouze k venkovnímu použití.
- Zařízení řady XE můžete provozovat v bezlicenčních frekvenčních pásmech v souladu s určenými frekvencemi v jednotlivých zemích. Provozovatelé a koncoví uživatelé musí zajistit, že se zařízení bude instalovat i provozovat v souladu s předpisy platnými v dané zemi.
- Používejte pouze se specifikovaným napájecím zdrojem platformy řady XE (PSU), napájecím adaptérem uvedeným v UL nebo zdrojem stejnosměrného proudu s označením „L.P.S" (nebo „Limited Power Source"), jmenovitým napětím 42,5–57 V DC, 60 W, gigabitovým pasivním PoE injektorem, 802.3 af/at/bt, Tma=65 stupňů C.

Zjednodušené prohlášení o shodě pro EU

Výrobce Cambium Networks Ltd. tímto prohlašuje, že rádiové zařízení typu XE3-4T splňuje požadavky směrnice 2014/53/EU. Úplné znění EU prohlášení o shodě je k dispozici na internetové adrese http://www.cambiumnetworks.com/eu_dofc

Směrnice o odpadních elektrických a elektronických zařízeních (OEEZ)

Nevyhazujte elektrická a elektronická zařízení ani elektrické a elektronické příslušenství do domovního odpadu. V některých zemích a regionech fungují systémy zajišťující sběr odpadních elektrických a elektronických zařízení. V zemích Evropské unie kontaktujte zástupce svého dodavatele zařízení nebo centrum podpory společnosti Cambium Networks a požádejte o informace o systému sběru odpadu ve své zemi.

Usage prévu (FR)

Les produits Wi-Fi pour professionnels de Cambium Networks sont destinés à la création de réseaux de données extérieure sans fil intérieure. Le XE3-4T utilise une conception à tri-radio et antennes internes. La norme 802.11ax offre un meilleur rendement que les normes des générations précédentes, elle apporte des améliorations de performances, une segmentation du réseau et une meilleure autonomie de la batterie.

Installation et fonctionnement

L'installation et l'utilisation de ce produit sont complexes, et Cambium Networks recommande de faire appel à un professionnel pour effectuer l'installation et la gestion du système, cela permettra de s'assurer que son fonctionnement soit conforme aux règlements de la région dans laquelle le produit est installé. Merci de suivre les instructions contenues dans cette fiche. D'autres directives sur l'installation et le fonctionnement sont disponibles dans le guide de l'utilisateur du produit, voir les liens fournis.
L'installateur doit disposer de toutes les compétences, connaissances et expériences pour effectuer l'installation, et il sera responsable des éléments suivants:
- Sa familarité avec les réglementations nationales applicables en cours, incluant les normes de radio, les normes d'installation électrique, et les normes de protection contre les surtensions.
- L'installation en conformité avec les instructions de Cambium Networks.
- La confirmation que les réglages de l'équipement sont conformes aux réglementations nationales ou régionales.

Veuillez observer les importantes instructions suivantes lors de l'installation. Cela permettra de régler l'équipement conformément aux réglementations nationales.
- Assurez-vous que l'équipement de la série XE exécute la dernière version du micrologiciel 6.x. Le logiciel est disponible sur le site Internet du Centre d'assistance de Cambium.
- Au cours de l'installation de l'équipement, vérifier que le code région correct est défini (le code région est prédéfini en usine pour les produits de l'UE), puis sélectionner le code pays correct pour le pays où le produit est en cours de déploiement.

Les changements ou modifications qui ne sont pas expressément approuvés par Cambium Networks peuvent faire perdre à l'utilisateur son droit d'utiliser l'équipement et annuler la garantie du fabricant.

Informations de sécurité du produit

Veuillez vous conformer aux règles de sécurité suivantes:
- S'assurer de toujours mettre hors tension et débrancher l'équipement avant l'entretien. L'alimentation du est le dispositif de déconnexion primaire. Cet équipement ne contient aucune pièce réparable.
- De forts champs de rayonnement radio (RF) sont présents près de l'antenne lorsque l'émetteur est en marche. Toujours mettre hors tension l'appareil série XE avant d'entreprendre des activités de maintenance devant l'antenne.
  - Respecter la limite de distance minimale de sécurité pour les produits série XE indiquée ci-dessous.
  - S'assurer que l'équipement est installé dans une position permettant d'éviter tout risque de radiation chez l'homme.
- Il est de la responsabilité de l'utilisateur d'installer l'équipement conformément aux réglementations nationales. Il est recommandé de faire effectuer l'installation par un installateur professionnel.
- Utilisez toujours l'unité d'alimentation (PSU) de plate-forme XE-Series spécifiée, l'adaptateur d'alimentation homologué UL ou la source d'alimentation CC marquée « L.P.S » (ou « Source d'alimentation limitée »), nominale 42,5-57 Vdc, 60 W, injecteur PoE passif Gigabit, 802.3af /at/bt, Tma=65 degré C, pour alimenter l'équipement. Le fait de ne pas utiliser le bloc d'alimentation fourni par Cambium Networks avec les valeurs nominales spécifiées sur l'étiquette de l'équipement peut entraîner un fonctionnement incorrect, des dommages à l'équipement et entraîner un risque de sécurité ou d'incendie.
- Installez toujours les câbles Cambium Networks recommandés.
  - Utilisez un câble d'alimentation avec fil de terre à sécurité intégrale prévu pour un branchement sur une prise de terre à sécurité intégrale.
  - Les branchements de protection doivent être effectués conformément aux règles de branchement nationales ou locales
- L'enveloppe de l'unité intérieure peut être chaude au toucher lorsqu'elle est en marche.

Opération au sein de l'UE (CE)

Bandes de fréquences, puissance maximale de fonctionnement, distance de sécurité

Au sein de l'UE, Les produits série XE bi-bande 2.4 GHz / 5 GHz / 6 GHz fonctionnent sur les bandes de fréquences suivantes jusqu'à la puissance maximale indiquée:

Bande de fréquence de fonctionnement	Norme UE	Limite de puissance maximale (PIRE)	Usage permis	Unités prenant en charge cette bande de fréquence
2400 - 2483.5 MHz	EN 300 328	100 mW / 20 dBm	Disponible pour une utilisation générale dans tous les pays de l'UE	Toutes XV \ XE Series
5150 - 5350 MHz	EN 301 893	200 mW / 23 dBm		Toutes XV \ XE Series
5470 - 5725 MHz	EN 301 893	1 W / 30 dBm		Toutes XV \ XE Series
5725 - 5850 MHz	EN 302 502	4 W / 36 dBm		Toutes XV \ XE Series

Remarque : le fonctionnement au Royaume-Uni dans la bande de fréquences 5,8 GHz est conforme à la UK Interface Requirement 2007, Fixed Broadband Services fonctionnant dans la bande 5 725 - 5 850 MHz

Pour les produits série XE déployés au sein de l'UE, la distance minimale de sécurité entre l'équipement et les personnes est de 24 cm. L'appareil est limité à une utilisation en intérieur uniquement lorsqu'il fonctionne dans la plage de fréquences 5150 à 5350 MHz et 5945 à 6425MHz.

Restrictions et exigences pour l'autorisation d'utilisation

- Cet équipement est réservé à un usage extérieur uniquement.
- Les produits de série XE peuvent être configurés pour fonctionner sur des bandes de fréquences sans licence, sous réserve de la planification des fréquences de chaque pays. Les opérateurs/utilisateurs doivent s'assurer que l'équipement est installé et exploité conformément à la réglementation en vigueur dans le pays d'opération.
- Utiliser uniquement avec l'unité d'alimentation (PSU) de la plate-forme XE-Series spécifiée, l'adaptateur d'alimentation homologué UL ou la source d'alimentation CC marquée "L.P.S" (ou "Source d'alimentation limitée"), nominale 42,5-57Vdc, 60W, injecteur PoE passif Gigabit, 802.3 af/at/bt, Tma=65 degrés C.

Déclaration de conformité de l'UE simplifiée

Par les présentes, le fabricant, Cambium Networks Ltd, déclare que les équipements radio de type XE3-4T sont conformes à la Directive 2014/53/UE. Le texte complet de la déclaration de conformité de l'UE est disponible à l'adresse Internet suivante : http://www.cambiumnetworks.com/eu_dofc

Directive Déchets d'Équipements Électriques et Électroniques (DEEE)

Merci de ne pas jeter l'équipement électronique et électrique ou les accessoires électroniques et électriques avec vos déchets ménagers. Dans certains pays ou régions, des systèmes de collecte ont été mis en place pour gérer les déchets d'équipements électriques et électroniques. Dans les pays de l'Union européenne, veuillez contacter votre représentant local fournisseur d'équipements ou votre Centre d'assistance Cambium Networks pour plus d'informations sur le système de collecte des déchets de votre pays.

Verwendungszweck (DE)

Die WLAN-Produkte des Unternehmens Cambium Networks sind für den Einsatz in drahtlosen LAN-Datennetzwerken im draussen von Gebäuden vorgesehen. Der XE3-4T ist ein Tri-Radio-Design mit internen Antennen. Der Standard 802.11ax ist effizienter als frühere Generationen und bietet Leistungsverbesserungen, Netzwerksegmentierung und eine verbesserte Batterielebensdauer.

Installation & Betrieb

Die Installation und der Betrieb dieses Produkts sind komplex. Cambium Networks empfiehlt daher eine professionelle Installation und Verwaltung des Systems, um sicherzustellen, dass der Betrieb den regionalen Vorschriften am Installationsort des Produktes entspricht. Bitte beachten Sie die Hinweise in diesem Produktblatt. Weitere Informationen zur Installation und zum Betrieb finden Sie im Produkthandbuch. Siehe Web-Links.
Der Installateur muss über die erforderlichen Fähigkeiten, Kenntnisse und Erfahrungen verfügen, um die Installation durchführen zu können, und ist für Folgendes verantwortlich:
- Kenntnis der aktuell geltenden nationalen Vorschriften, einschließlich Vorschriften für Funk, elektrische Installationen und Überspannungsschutz.
- Installation gemäß den Anleitungen und Hinweisen von Cambium Networks.
- Bestätigung, dass die Einstellungen der Anlage den nationalen oder regionalen Bestimmungen entsprechen.

Bitte beachten Sie bei der Installation die folgenden wichtigen Hinweise. Dadurch wird die Anlage in Übereinstimmung mit den nationalen gesetzlichen Bestimmungen gebracht.
- Stellen Sie sicher, dass auf Geräten der XE-Serie die neueste 6.x-Firmwareversion ausgeführt wird. Die Software ist auf der Website des Cambium Networks Support Center erhältlich.
- Vergewissern Sie sich während der Einrichtung des Geräts, dass der richtige Regionalcode eingestellt ist (für EU-Produkte ist der Regionalcode werkseitig voreingestellt), und wählen Sie dann den richtigen Ländercode für das jeweilige Land aus, in dem das Produkt eingesetzt wird.

Änderungen oder Modifikationen, die nicht ausdrücklich von Cambium Networks genehmigt wurden, können die Berechtigung des Benutzers zum Betrieb des Geräts aufheben und die Garantie des Herstellers aufheben.

Informationen zur Produktsicherheit

Beachten Sie die folgenden Sicherheitshinweise:
- Schalten Sie das Gerät vor Wartungsarbeiten immer aus und ziehen Sie den Netzstecker. Das Netzteil ist das primäre Gerät zur Trennung der Stromversorgung. Das Gerät enthält keine zu wartenden Teile.
- In der Nähe der Antenne sind starke Hochfrequenzfelder vorhanden, wenn der Transmitter eingeschaltet ist. Schalten Sie Funkmodule der XE-Serie immer aus, bevor Sie Wartungsarbeiten vor der Antenne durchführen.
  - Beachten Sie den unten angegebenen Mindestsicherheitsabstand für Produkte der XE-Serie.
  - Stellen Sie sicher, dass das Gerät so installiert ist, dass keine Strahlengefährdung für den Menschen besteht.
- Es liegt in der Verantwortung des Benutzers, das Gerät gemäß den nationalen Vorschriften zu installieren. Es wird empfohlen, die Installation von einem professionellen Installateur durchführen zu lassen.
- Verwenden Sie immer das angegebene Plattformnetzteil (PSU) der XE-Serie, das UL-gelistete Netzteil oder die mit „L.P.S" (oder „Limited Power Source") gekennzeichnete Gleichstromquelle mit einer Nennleistung von 42,5–57 VDC, 60 W, passivem Gigabit-PoE-Injektor, 802.3af /at/bt, Tma=65 Grad C, um die Ausrüstung mit Strom zu versorgen. Die Nichtverwendung des von Cambium Networks gelieferten Netzteils mit den Nennwerten, die auf dem Geräteetikett angegeben sind, kann zu unsachgemäßem Betrieb, Schäden an Geräten und einer Sicherheits- oder Brandgefahr führen.
- Installieren Sie immer von Cambium Networks empfohlene Kabel.
  - Verwenden Sie ein Netzkabel mit einem integrierten Schutzleiter, der für den Anschluss an eine geerdete Sicherheitssteckdose vorgesehen ist.
  - Der Schutzverbund muss gemäß den örtlichen nationalen Verdrahtungsvorschriften und -bestimmungen installiert werden.
- Das Gehäuse der Indoor Unit kann während des Betriebs heiß werden.

Betrieb in der EU (CE)

Frequenzbänder, maximale betriebsleistung, sicherheitsabstand

In der EU arbeiten die 2.4 GHz / 5 GHz / 6 GHz Tri band-Funkmodule der XE-Serie in den folgenden Frequenzbändern bis zur angegebenen maximalen Leistung:

Betriebs-frequenzband	EU standard	Maximale Leistungs-grenze (EIRP)	Zulässigkeit	Geräte, die dieses Frequenzband unterstützen
2400 - 2483.5 MHz	EN 300 328	100 mW / 20 dBm	Verfügbar für den allgemeinen Gebrauch in allen EU-Ländern	Alle Modelle der XV \ XE Serie
5150 - 5350 MHz	EN 301 893	200 mW / 23 dBm		Alle Modelle der XV \ XE Serie
5470 - 5725 MHz	EN 301 893	1 W / 30 dBm		Alle Modelle der XV \ XE Serie
5725 - 5850 MHz	EN 302 502	4 W / 36 dBm		Alle Modelle der XV \ XE Serie

Hinweis: Der UK-Betrieb im 5,8-GHz-Frequenzband entspricht der UK Interface Requirement 2007, Fixed Broadband Services operation in the 5725 - 5850 MHz Band.

Für in der EU eingesetzte Geräte der XE-Serie beträgt der minimale Sicherheitsabstand zwischen Gerät und Mensch 24 cm. Das Gerät ist auf die Verwendung in Innenräumen beschränkt, wenn es in den Frequenzbereichen 5150 bis 5350 MHz und 5945 bis 6425 MHz betrieben wird.

Einschränkungen & Anforderungen für die zulassung zur nutzung

- Dieses Gerät ist nur für den Gebrauch im Freien bestimmt.
- Die Funkmodule der XE-Serie können für den Betrieb in nicht lizenzierten Frequenzbändern konfiguriert werden, die der Frequenzplanung in den einzelnen Ländern unterliegen. Betreiber/Endnutzer müssen sicherstellen, dass das Gerät in Übereinstimmung mit den für das Betriebsland geltenden Vorschriften installiert und betrieben wird.
- Verwenden Sie nur das angegebene Plattformnetzteil (PSU) der XE-Serie, das UL-gelistete Netzteil oder die mit „L.P.S" (oder „Limited Power Source") gekennzeichnete Gleichstromquelle mit einer Nennleistung von 42,5–57 VDC, 60 W, passivem Gigabit-PoE-Injektor, 802.3 af/at/bt, Tma=65 Grad C.

Vereinfachte EU-Konformitätserklärung

Hiermit erklärt der Hersteller Cambium Networks Ltd, dass die Funkgeräteart XE3-4T der Richtlinie 2014/53 / EU entspricht. Der vollständige Text der EU-Konformitätserklärung ist unter folgender Internetadresse verfügbar: http://www.cambiumnetworks.com/eu_dofc.

Richtlinie für Elektro- und Elektronikaltgeräte (WEEE)

Bitte entsorgen Sie elektronische und elektrische Geräte oder elektronisches und elektrisches Zubehör nicht im Hausmüll. In einigen Ländern oder Regionen wurden Sammelsysteme zur Behandlung des Abfalls von Elektro- und Elektronikgeräten eingerichtet. In den Ländern der Europäischen Union wenden Sie sich bitte an Ihren lokalen Gerätelieferanten oder das Cambium Networks Support Center, um Informationen über das Abfallsammelsystem in Ihrem Land zu erhalten.

Rendeletésszerű használat (HU)

A Cambium Networks enterprise kategóriájú Wi-Fi termékei szabadtéri vezeték nélküli LAN adathálózatok megvalósítására valók. A XE3-4T tri-rádió (tri-radio) kialakítású, belső antennákkal. A 802.11ax szabvány hatékonyabb, mint a korábbi generációk; jobb teljesítménymutatókkal, hálózati szegmentációval és hosszabb akkumulátor-élettartammal szolgál.

Telepítés és üzemeltetés

A termék telepítése és üzemeltetése összetett; a Cambium Networks emiatt javasolja, hogy a termék üzembe helyezési régiójában érvényes előírásoknak való megfelelés érdekében szakember telepítse és kezelje a rendszert. Kérjük, a jelen tájékoztatóban megadott utasítások szerint járjon el. A telepítéshez és üzemeltetéshez további útmutatást a termék használói útmutatójában; lásd a webes hivatkozásokon.

A telepítőnek rendelkeznie kell a szükséges képességekkel, ismeretekkel és tapasztalattal a telepítés elvégzéséhez, és a következőkért felelős: -
- Az aktuális vonatkozó országos előírások, így a rádiókkal, az elektromos berendezések telepítésével, a túlfeszültség-védelemmel és a magaslatokon végzett munkával kapcsolatos előírások ismerete.
- Telepítés a Cambium Networks útmutatása szerint.
- Meggyőződés arról, hogy a berendezés beállításai megfelelnek az országos vagy regionális előírásoknak.

A telepítés során vegye figyelembe az alább fontos utasításokat! Ezáltal fog a berendezés megfelelni az országos előírásoknak.
- Győződjön meg arról, hogy az XE-Series berendezésen a legújabb 6.x firmware-verzió fut. A szoftvert a Cambium Networks Support Centre webhelyén.
- A berendezés beállításakor ellenőrizze, hogy a megfelelő régiókód van-e beállítva (amely az EU-s termékek esetében a gyári beállítás részeként előre meg van adva), majd válassza ki az üzembe helyezés országának megfelelő országkódot.

A Cambium Networks által kifejezetten jóvá nem hagyott változások és változtatások esetén a használó jogosultsága a berendezés üzemeltetésére megszűnhet, a gyártói garancia pedig érvénytelenné válik.

Termékbiztonsági információk

Tartsa szem előtt a következő biztonsági előírásokat:
- Javítás előtt mindig kapcsolja ki a berendezést, valamint szüntesse meg annak áramellátását! Az elsődlegesen leválasztandó eszköz a tápegység. A berendezésben nincsenek szervizelhető alkatrészek.
- A jeladó működésekor az antennához közel erős rádiófrekvenciás (RF) mezők vannak. Az antenna előtt végzett karbantartási műveletek előtt mindig kapcsolja ki a XE-Series eszközt áramellátásától!
  - Ügyeljen az XE-Series termékekhez alább megadott minimális biztonsági távolság tartására!
  - Ügyeljen arra, hogy a berendezést olyan helyzetben telepítsék, hogy az ne jelentsen sugárzásveszélyt az emberekre!
- A berendezés országos előírásoknak megfelelő telepítéséről a felhasználónak kell gondoskodnia. Ajánlott a telepítésre szakképzett telepítőt szerződtetni.
- Mindig a megadott XE sorozatú platform tápegységet (PSU), UL listán szereplő tápadaptert vagy „L.P.S" (vagy „Limited Power Source") jelzésű egyenáramú tápforrást használjon, névleges 42,5–57 Vdc, 60 W, Gigabit Passive PoE befecskendező, 802.3af /at/bt, Tma=65 °C, a berendezés táplálására. Ha a Cambium Networks által szállított tápegységet nem a berendezés címkéjén feltüntetett névleges értékekkel használja, az hibás működéshez, a berendezés károsodásához, valamint biztonsági vagy tűvezséllyhez vezethet.
- Minden esetben a Cambium Networks által javasolt kábeleket telepítsen.
  - Olyan tápkábelt használjon, amelyben földelt biztonsági jelzőnek konnektorhoz való csatlakoztatásra szolgáló biztonsági földelővezeték van.
  - A védőtestelést (földelést) a helyi országos huzalozási szabályoknak megfelelően kell kialakítani
- Működés közben a beltéri egység burkolata megérinthe forró lehet.

EU-beli üzemeltetés (CE)

Frekvenciasávok, maximális működési teljesítmény, biztonságos távolság

Az EU-ban a kétsávú 2.4 GHz / 5 GHz / 6 GHz XE-Series szériájú termékek a következő frekvenciasávokban működnek, legfeljebb a feltüntetett maximális teljesítmény:

Működési frekvencia sáv	EU szabvány	Maximális teljesít-ményhatár (EIRP)	Engedélyezett használat	Ezt a frekvenciasávot támogató egységek
2400 - 2483.5 MHz	EN 300 328	100 mW / 20 dBm	Általános használatra az összes EU nemzetében elérhető	Minden XV \ XE Series
5150 - 5350 MHz	EN 301 893	200 mW / 23 dBm		Minden XV \ XE Series
5470 - 5725 MHz	EN 301 893	1 W / 30 dBm		Minden XV \ XE Series
5725 - 5850 MHz	EN 302 502	4 W / 36 dBm		Minden XV \ XE Series

Megjegyzés: Az egyesült királyságbeli működés az 5,8 GHz-es frekvenciasávban megfelel az Egyesült Királyság 2007-es interfész követelményének, az 5725–5850 MHz-es sávban működő vezetékes szélessávú szolgáltatások.

Az EU-ban üzembe hely

Robocze pasma częstotliwości	Norma UE	Moc Maksymalna (EIRP)	Dozwolone użycie	Urządzenia obsługujące to pasmo częstotliwości
2400 - 2483.5 MHz	EN 300 328	100 mW / 20 dBm	Dostępne do ogólnego użytku we wszystkich krajach UE	Wszystkie XV \ XE serii.
5150 - 5350 MHz	EN 301 893	200 mW / 23 dBm		Wszystkie XV \ XE serii.
5470 - 5725 MHz	EN 301 893	1 W / 30 dBm		Wszystkie XV \ XE serii.
5725 - 5850 MHz	EN 302 502	4 W / 36 dBm		Wszystkie XV \ XE serii.

Uwaga: Praca w Wielkiej Brytanii w paśmie częstotliwości 5,8 GHz jest zgodna z brytyjskimi wymaganiami dotyczącymi interfejsu 2007, usługi stałej łączności szerokopasmowej działające w paśmie 5725 - 5850 MHz.

W przypadku urządzeń serii XE na terenie UE minimalna bezpieczna odległość człowieka od urządzenia wynosi 24 cm. Urządzenie jest ograniczone do użytku w pomieszczeniach wyłącznie w zakresie częstotliwości od 5150 do 5350 MHz i od 5945 do 6425 MHz.

Stosowanie na terenie UE – ograniczenia i wymóg homologacji

- Urządzenie jest przeznaczone wyłącznie do użytku na zewnątrz.
- Urządzenia serii XE mogą być konfigurowane na potrzeby korzystania z nielicencjonowanych pasm częstotliwości zależnie od podziału pasm w poszczególnych krajach. Operatorzy / użytkownicy końcowi muszą zadbać o to, by przy instalacji i eksploatacji sprzętu były przestrzegane wszystkie obowiązujące normy i przepisy w odnośnym kraju.
- Używaj tylko z określonym zasilaczem platformy XE-Series (PSU), zasilaczem wymienionym na liście UL lub źródłem zasilania DC oznaczonym „L.P.S" (lub „Limited Power Source"), o napięciu znamionowym 42,5-57 V DC, 60 W, Gigabit Passive PoE Injector, 802.3 af/at/bt, Tma=65 stopni C.

Uproszczona deklaracja zgodności UE

Producent, Cambium Networks Ltd, oświadcza niniejszym, że urządzenie radiokomunikacyjne XE3-4T spełnia wymogi dyrektywy 2014/53/UE. Pełny tekst unijnej deklaracji zgodności jest dostępny pod następującym adresem internetowym: http://www.cambiumnetworks.com/eu_dofc

Dyrektywa o zużytym sprzęcie elektrycznym i elektronicznym (WEEE)

Zużyty sprzęt elektryczny i elektroniczny i jego akcesoria nie powinny być utylizowane jako część odpadów zmieszanych. W niektórych krajach lub regionach zorganizowano systemy selektywnej zbiórki odpadów elektrycznych i elektronicznych. W celu uzyskania informacji o selektywnym odbiorze odpadów w krajach Unii Europejskiej należy skontaktować się z lokalnym sprzedawcą sprzętu lub z centrum serwisowym Cambium Networks.

Uso previsto

ES

Los productos Wi-Fi para empresas de Cambium Networks están diseñados para redes LAN inalámbricas de exterior. El XE3-4T es un punto de acceso con diseño de tri banda y antenas internas. El estándar 802.11ax presenta una eficiencia superior a la de las generaciones anteriores, y ofrece mejoras de rendimiento, segmentación de red y menos consumo de batería.

Instalación y operación

la instalación y la operación de este producto son complejos; Cambium Networks recomienda una instalación y gestión profesional del sistema para garantizar que su operación cumple con la normativa de la región en la que está instalado el producto. Siga las instrucciones de este folleto. En la guía de usuario del producto (consulte el enlace más abajo) hay más información relativa a la instalación y la operación.

El instalador debe tener la suficiente competencia, formación y experiencia para realizar la instalación. Además, es responsable de lo siguiente:

- Conocer la legislación nacional en vigor que sea de aplicación, así como de las normativas radioeléctricas, de instalaciones eléctricas, de protección contra sobretensiones y de trabajo en altura.
- Realizar la instalación siguiendo las instrucciones de Cambium Networks.
- Confirmar que los ajustes del equipo cumplen con la legislación nacional o regional.

Tenga en cuenta las importantes indicaciones que aparecen a continuación durante la instalación. Esto configurará el equipo de conformidad con la legislación nacional.

- Asegúrese de que el equipo de la serie XE esté ejecutando la última versión de firmware 6.x. El software está disponible en el sitio web del Centro de soporte de Cambium.
- Durante la configuración del equipo, compruebe que el código de región está establecido (en los productos de la UE viene preestablecido de fábrica) y seleccione el código del país concreto en el que se esté instalando el producto.

Los cambios y las modificaciones no autorizados de forma explícita por Cambium Networks pueden invalidar la autorización otorgada al usuario para utilizar el equipo e invalidarán la garantía del fabricante.

Información de seguridad del producto

Observe las siguientes normas de seguridad:

- Apague y desconecte el equipo siempre antes de realizar trabajos de mantenimiento. La fuente de alimentación del es el dispositivo de desconexión principal. Este equipo no contiene piezas en su interior que el usuario pueda reparar.
- Habrá niveles de radiofrecuencia (RF) elevados cerca de la antena cuando el transmisor esté encendido. Apague siempre la alimentación del dispositivo serie XE antes de realizar trabajos de mantenimiento frente a la antena.
  - Tenga en cuenta la distancia de seguridad mínima para los productos de la serie XE que se muestra más abajo.
  - Asegúrese de que el equipo está instalado en una posición que evite cualquier peligro de radiación sobre las personas.
- Es responsabilidad del usuario realizar la instalación del equipo de acuerdo con la legislación nacional. Se recomienda que un profesional realice la instalación.
- Utilice siempre la unidad de fuente de alimentación (PSU) de la plataforma de la serie XE especificada, el adaptador de alimentación homologado por UL o la fuente de alimentación de CC marcada como "L.P.S" (o "Fuente de alimentación limitada"), nominal de 42,5-57 V CC, 60 W, inyector PoE pasivo Gigabit, 802.3af /at/bt, Tma=65 grados C, para alimentar el equipo. Si no se utiliza la fuente de alimentación suministrada por Cambium Networks con las clasificaciones que se especifican en la etiqueta del equipo, es posible que se produzca un funcionamiento incorrecto, daños en el equipo y un riesgo de seguridad o incendio.
- Instale siempre los cables recomendados por Cambium.
  - Utilice un cable de alimentación con un conductor de conexión a tierra de seguridad integral, destinado a conectarse a una toma de corriente con conexión a tierra.
  - La conexión a tierra debe instalarse según las normativas y reglamentos de cableado nacionales y locales.
- La carcasa de la unidad interior debe estar caliente al tacto cuando está en funcionamiento.

Operación en la UE

CE

Bandas de frecuencia, potencia máxima de trabajo y distancia de seguridad

En la UE, los productos serie XE de tri-banda a 2.4 GHz / 5 GHz / 6 GHz operan con las siguientes bandas de frecuencia hasta la máxima potencia indicada:

Banda de frecuencia de operación	Norma UE	Límite de potencia máxima (EIRP)	Uso permitido	Modelos que admiten esta banda de frecuencia
2400 - 2483.5 MHz	EN 300 328	100 mW / 20 dBm	Disponible para uso general en todas los países de la UE	Todos la XV \ XE Series
5150 - 5350 MHz	EN 301 893	200 mW / 23 dBm		Todos la XV \ XE Series
5470 - 5725 MHz	EN 301 893	1 W / 30 dBm		Todos la XV \ XE Series
5725 - 5850 MHz	EN 302 502	4 W / 36 dBm		Todos la XV \ XE Series

Nota: la operación en el Reino Unido en la banda de frecuencia de 5,8 GHz cumple con el requisito de interfaz del Reino Unido de 2007, servicios de banda ancha fija que operan en la banda de 5725 a 5850 MHz.

Para los productos serie XE implementados en la UE, la distancia mínima de seguridad entre el equipo y las personas es de 24 cm. El dispositivo está restringido para uso en interiores solo cuando funciona en los rangos de frecuencia de 5150 a 5350 MHz y de 5945 a 6425 MHz.

Operacion en la UE. Restricciones y requisitos de autorización para el uso

- Este equipo se ha diseñado únicamente para uso exterior.
- Los productos serie XE pueden configurarse para funcionar en bandas de frecuencia no licenciadas sujetas a la planificación de frecuencias de los distintos países. Los operadores o los usuarios finales deben garantizar que el equipo se ha instalado y funciona de acuerdo con la normativa aplicable del país de operación.
- Úselo solo con la unidad de fuente de alimentación (PSU) de la plataforma XE-Series especificada, el adaptador de alimentación con certificación UL o la fuente de alimentación de CC marcada como "L.P.S" (o "Fuente de alimentación limitada"), nominal de 42,5-57 V CC, 60 W, inyector PoE pasivo Gigabit, 802.3 af/at/bt, Tma=65 grados C.

Declaración de conformidad simplificada de la UE

Por el presente texto, el fabricante Cambium Networks Ltd declara que el tipo de equipo de radiocomunicación XE3-4T cumple la directiva 2014/53/UE. El texto completo de la Declaración de conformidad de la UE está disponible en la siguiente dirección de internet: http://www.cambiumnetworks.com/eu_dofc.

Directiva relativa a los residuos de aparatos eléctricos y electrónicos (RAEE)

No deseche el equipo electrónico y eléctrico o los accesorios electrónicos y eléctricos con los residuos domésticos. En algunos países y algunas regiones se han establecido sistemas de recogida para tratar los desechos de equipos eléctricos y electrónicos. En los países de la Unión Europea, póngase en contacto con el proveedor representante local del equipo o con el Centro de soporte de Cambium Networks para obtener más información sobre los sistemas de recogida de desechos en su país.

Kullanım amacı

TR

Cambium Networks kurumsal Wi-Fi ürünleri açık kablosuz yerel ağ (LAN) veri ağları sunumuna yönelik tasarlanmıştır. XE3-4T entegre dahili antenli üçlü telsiz tasarımıdır. Performans iyileştirmeleri, ağı segmentlere ayırma ve artırılmış pil ömrü sağlanmasında 802.11ax standardı önceki nesillere göre daha verimlidir.

Kurulum ve Çalıştırma

Bu ürünün kurulum ve çalıştırma işlemlerinin karmaşık olmasından dolayı Cambium, çalıştırma işleminin ürünün kurulu olduğu bölgedeki kurallarla uyumlu olmasını sağlamak için sistemin kurulum ve yönetiminin bir profesyonel tarafından yapılmasını önerir. Lütfen bu broşürde yer alan talimatları uygulayın. Kurulum ve çalıştırma hakkında daha fazla bilgi, ürünün kullanım kılavuzunda mevcuttur; daha fazla bilgi için aşağıdaki internet bağlantılarına göz atın.

Kurulumu yapan kişinin kurulum görevini gerçekleştirebilecek düzeyde yeterli bilgi, beceri ve deneyime sahip olması gerekir ve bu kişi şunlardan sorumludur: -

- Telsiz mevzuatı, elektrikli aletlerin kurulum mevzuatı, aşırı gerilim koruma mevzuatı ve "yüksekte çalışma" mevzuatı da dahil olmak üzere yürürlükteki mevcut ulusal mevzuatlara aşina olmak.
- Kurulumu Cambium Networks talimatlarına göre gerçekleştirmek.
- Ekipman ayarlarının ulusal ya da bölgesel mevzuatlara uygun olduğunu onaylamak.

Kurulum sırasında lütfen aşağıdaki önemli talimatları uygulayın. Bu işlem, ekipmanın ulusal düzenleyici mevzuatlara uyumluluğunu sağlayacaktır.

- XE-Serisi ekipmanın en son 6.x üretici yazılımı sürümünü çalıştırdığından emin olun. Yazılım, Cambium Networks Destek Merkezi web sitesinden temin edilebilir.
- Ekipmanın kurulumu sırasında ürünün kurulduğu ülke için geçerli olan doğru bölge koduna ayarlandığını doğrulayın (AB ürünleri için bölge kodu fabrika ön ayarlıdır) ve ardından ürünün kurulduğu söz konusu ülke için doğru ülke kodunu seçin.

Açık sekilde Cambium Networks tarafından onaylanmamış değişiklikler veya düzeltmeler kullanıcının ekipmanı çalıştırma yetkisini geçersiz kılabilir ve üretici garantisini hükümsüz kılabilir.

Ürün Güvenlik Bilgileri

Aşağıdaki güvenlik kurallarına uyun:

- Servis bakımı yapmadan önce daima ekipmanı kapatın ve fişten çekin. güç kaynağı birincil devre kesme cihazıdır. Bu ekipman içerisinde servis bakımı yapılabilecek bir parça bulunmamaktadır.
- Verici açık durumdayken anten yakınında güçlü radyo frekansı (RF) alanları bulunacaktır. Anten önünde bakım faaliyetleri gerçekleştirmeden önce daima XE-Serisi cihazına gelen gücü kapatın.
  - XE-Serisi ürünler için aşağıda sunulmuş olan minimum güvenli mesafe sınırına uyun.
  - Ekipmanı insanlar için herhangi bir radyasyon tehlikesi oluşturmayacak şekilde kurulduğundan emin olun.
- Ekipmanın ulusal mevzuatlara uygun şekilde kurulması kullanıcının sorumluluğundadır. Kurulum işinin profesyonel kurulum işlemi yapan bir kişiye verilmesi önerilir.
- Daima belirtilen XE Serisi platform güç kaynağı ünitesini (PSU), UL Listeli Güç Adaptörünü veya "L.P.S" (veya "Sınırlı Güç Kaynağı") olarak işaretlenmiş DC güç kaynağını kullanın, 42.5-57Vdc, 60W, Gigabit Pasif PoE enjektörü, 802.3af /at/bt, Tma=65 derece C, ekipmana güç sağlamak için. Cambium Networks tarafından sağlanan PSU'nun ekipman etiketinde belirtilen değerlerde kullanılmaması, hatalı çalışmaya, ekipmana zarar verebilir ve güvenlik veya yangın tehlikesine neden olabilir.
- Her zaman Cambium Networks tarafından önerilen kablolan kullanın.
  - Topraklı bir güvenlik prizine takılmak üzere tasarlanmış entegre güvenlik topraklama teli bulunan bir güç kablosu kullanın.
  - Koruyucu bağlama kurulumu yerel ulusal kablolama kural ve mevzuatlarına göre gerçekleştirilmelidir
- Çalıştırma sırasında iç mekan ünite mahfazası dokunulamayacak düzeyde sıcak olabilir.

AB'de Çalıştırma

CE

Frekans Bantları, maksimum Çalıştırma gücü ve güvenli mesafe

AB'de 2.4 GHz / 5 GHz / 6 GHz üçlü bant XE-Serisi ürünler aşağıdaki frekans bantlarında, gösterilen en yüksek güçte çalıştırılır:

Çalışma frekansı bandı	AB standardı	Maksimum güç sınırı (EIRP)	İzin verilen kullanım	Bu frekans bandını destekleyen birimler
2400 - 2483.5 MHz	EN 300 328	100 mW / 20 dBm	Tüm AB ülkelerinde genel kullanım uygundur	Tüm XV \ XE Serisi
5150 - 5350 MHz	EN 301 893	200 mW / 23 dBm		Tüm XV \ XE Serisi
5470 - 5725 MHz	EN 301 893	1 W / 30 dBm		Tüm XV \ XE Serisi
5725 - 5850 MHz	EN 302 502	4 W / 36 dBm		Tüm XV \ XE Serisi

Not: Birleşik Krallık'ta 5,8 GHz frekans bandında işlem, 5725 - 5850 MHz bandında çalışan Sabit Geniş Bant Hizmetleri, Birleşik Krallık Arabirim Gereksinimi 2007'ye uygundur.

AB'de kurulumu yapılan XE-Serisi ürünler için ekipman ve insanlar arasındaki minimum güvenli mesafe 24 cm'dir. Cihaz, 5150 ila 5350 MHz ve 5945 ila 6425 MHz frekans aralıklarında çalışırken yalnızca iç mekan kullanımıyla sınırlandırılmıştır.

Kullanım izni kısıtlamaları ve gerekliilikleri

- Bu ekipman sadece dış mekan kullanımı içindir.
- XE-Serisi ürünler farklı ülkelerdeki frekans planlamasına bağlı olmak üzere, lisanssız frekans bantlarında çalışacak şekilde yapılandırılabilir. Operatörler/ Son Kullanıcılar ekipmanın çalıştırma işleminin yapılacağı ülkede yürürlükte bulunan mevzuata göre kurulum ve çalıştırma işlemlerinin gerçekleştirilmesini sağlamalıdır.
- Yalnızca belirtilen XE Serisi platform güç kaynağı ünitesi (PSU), UL Listeli Güç Adaptörü veya "L.P.S" (veya "Sınırlı Güç Kaynağı") olarak işaretlenmiş DC güç kaynağı, 42.5-57Vdc, 60W, Gigabit Pasif PoE enjektör, 802.3 ile kullanın af/at/bt, Tma=65 derece C.

Basitleştirilmiş AB Uygunluk Beyanı

Işbu beyan metniyle üreticiCambium Networks Ltd. sirketi, XE3-4T telsiz ekipman türünün 2014/53/EU Yönergesiyle uyumlu olduğunu beyan eder. AB uygunluk beyanının tam metnine erişilebilecek internet adresi: http://www.cambiumnetworks.com/eu_dofc

Atık Elektrikli ve Elektronik Ekipmanlar (WEEE) Yönergesi

Lütfen Elektronik ve Elektrikli Ekipmanları veya Elektronik ve Elektrikli Aksesuarları ev atıklarınızla birlikte atmayın. Bazı ülkelerde ya da bölgelerde elektrikli ve elektronik ekipmanı atıklarının yönetimi için toplama sistemleri kurulmuştur. Avrupa Birliği ülkeleri için geçerli olmak üzere, ülkenizdeki atık toplama sistemi hakkında bilgi için yerel ekipman tedarikçi temsilcinizle veya Cambium Networks Destek Merkezi'yle iletişime geçin.

Назначение

RU

Данные точки доступа Wi-Fi-оборудование, изготовленные компанией Cambium Networks предназначены для создания локальных сетей обмена данными на в на открытом воздухе. Изделие XE3-4T оснащено три радиосистемами с программно-определяемой конфигурацией и внутренними антеннами. Стандарт 802.11ax более эффективен по сравнению с предыдущими поколениями и обеспечивает большую производительность, сегментацию сети и время работы от батареи.

Установка и эксплуатация

Данное изделие является сложным в установке и эксплуатации, поэтому компания Cambium Networks рекомендует выполнять установку и управление системой при помощи специалистов с целью соблюдения требований нормативных документов страны, в которой установлено изделие. Выполните указания, приведённые в данном информационном листе. Дальнейшие сведения по установке и эксплуатации содержатся в руководстве пользователя изделия (см. ссылки).

Установщик должен обладать соответствующими навыками, знаниями и опытом для выполнения задачи по установке и отвечает за:

- Осведомлённость о текущих требованиях государственных нормативных документов, в том числе в области радиосвязи, электроустановок и защиты от перенапряжения.
- Выполнение установки в соответствии с указаниями компании Cambium Networks.
- Соответствие настроек оборудования государственным или местным нормативным документам.

Соблюдайте нижеследующие указания во время установки. Это обеспечит соответствие оборудование требованиям государственных нормативных документов.

- Убедитесь, что на оборудовании серии XE установлена последняя версия прошивки 6.x. Обновлённая версия программного обеспечения доступна на сайте Центра поддержки Cambium.
- Во время настройки оборудования убедитесь в установке соответствующего кода региона (у изделий для ЕС код устанавливается на заводе), после чего выберите код страны, соответствующий стране установки изделия.

Внесение изменений, без конкретного письменного разрешения Cambium Networks может привести к лишению эксплуатанта права эксплуатировать оборудование, а также к прекращению гарантийных обязательств.

Информация по технике безопасности

Соблюдайте следующие правила безопасности:

- Перед выполнением обслуживания всегда выключайте устройство и отключайте его от электросети. Главным устройством отключения является источник питания. Обслуживание внутренних частей данного оборудования не предусмотрено.
- Всегда отключайте питание устройства серии XE перед выполнением работ по обслуживанию спереди от антенны.
  - Придерживайтесь минимального безопасного расстояния для изделий серии XE, указанного ниже.
  - Убедитесь, что оборудование установлено в положении, не создающем опасность облучения.
- За соответствие установки требованиям государственных нормативных документов отвечает эксплуатант. Рекомендуется привлекать к установке профессионального установщика.
- Всегда используйте указанный блок питания (БП) платформы серии XE, адаптер питания, внесенный в список UL, или источник питания постоянного тока с маркировкой «LPS» (или «Ограниченный источник питания», номиналом 42,5–57 В постоянного тока, 60 Вт, инжектор Gigabit Passive PoE, 802.3af /at/bt, Tma=65°C, для питания оборудования. Неиспользование блока питания, поставляемого Cambium, с параметрами, указанными на этикетке оборудования, может привести к неправильной работе, повреждению оборудования и стать причиной возникновения опасности или пожара.
- Всегда устанавливайте кабели, рекомендуемые компанией Cambium.
  - Используйте шнур питания с заземляющей жилой, предназначенный для подключения к заземлённой розетке
  - Защитные соединения должны выполняться в соответствии с требованиями государственных нормативных документов и правил устройства электроустановок
- Корпус устройства, предназначенного для эксплуатации в помещениях, может во время эксплуатации быть горячим на ощупь.
- Более подробную информацию об источнике/адаптере питания вы можете получить, связавшись с вашим местным поставщиком.
- При использовании для питания адаптера PoE класса I, убедитесь, что шнур питания надёжно подключён к розетке и подтвердите наличие заземления.

Эксплуатация в ЕС

Диапазоны частот, максимальная эксплуатационная мощность, безопасное расстояние

В ЕС, три полосы (2,4 ГГц / 5 ГГц / 6 ГГц) изделия серии XE эксплуатируются в следующих диапазонах частот до указанной максимальной мощности:

Рабочий диапазон частот	Стандарт ЕС	Максимальная мощность (ЭИИМ)	Разрешённое применение	Устройства, поддерживающие данный диапазон частот
2400- 2483.5 МГц	EN 300 328	100 мВт / 20 дБм	Доступно для использования в общих целях во всех странах ЕС	Все устройства серии XV/XE
5150 - 5350 МГц	EN 301 893	200 мВт / 23 дБм		Все устройства серии XV/XE
5470 - 5725 МГц	EN 301 893	1 Вт / 30 дБм		Все устройства серии XV/XE
5725 -5850 МГц	EN 302 502	4 мВт / 36 дБм		Все устройства серии XV/XE

Примечание. Работа в Великобритании в диапазоне частот 5,8 ГГц соответствует требованиям Великобритании к интерфейсу 2007 г., услуги фиксированной широкополосной связи, работающие в диапазоне 5725–5850 МГц.

Для изделий серии XE, устанавливаемых в ЕС, минимальное безопасное расстояние между оборудованием и человеком составляет 24 см. Устройство можно использовать только внутри помещений при работе в диапазонах частот от 5150 до 5350 МГц и от 5945 до 6425 МГц.

Ограничения и требования для допуска к эксплуатации

- Данное оборудование предназначено для эксплуатации только на открытом воздухе.
- Изделия серии XE могут быть настроены на эксплуатацию в нелицензированных диапазонах частот, подлежащих планированию в отдельных странах. Эксплуатанты / Конечные пользователи должны обеспечить установку и эксплуатацию оборудования в соответствии с нормативными документами страны эксплуатации.
- Используйте только с указанным блоком питания платформы (PSU) серии XE, адаптером питания, внесенным в список UL, или источником питания постоянного тока с маркировкой «LPS» (или «Limited Power Source»), номиналом 42,5–57 В постоянного тока, 60 Вт, инжектором Gigabit Passive PoE, 802.3 af/at/bt, Tma=65 градусов С.

Упрощённая Декларация о соответствии нормативным требованиям ЕС

Производитель Cambium Networks Ltd, настоящим заявляет о соответствии радиооборудования типа XE3-4T Директиве ЕС 2014/53/EU. Полный текст Декларации о соответствии находится по адресу: http://www.cambiumnetworks.com/eu_dofc

Директива ЕС об утилизации электрического и электронного оборудования (WEEE)

Запрещается утилизировать электрическое и электронное оборудование, а также электроприборы с бытовыми отходами. В некоторых странах и регионах устроены системы сбора отработанного электрического и электронного оборудования. В странах ЕС, для получения информации о системе сбора отходов в вашей стране, свяжитесь с вашим представителем поставщика оборудования или Центром поддержки Cambium Networks.

AP Management

GB IE NO

Standalone	Access Point can be managed directly from its GUI by selecting the 'Configure' tab on the menu, and setting up a wireless LAN.
On-Premises	Access Point can be onboarded to the cnMaestro network management system.
Cloud	Access Point can be onboarded to either cnMaestro Cloud or XMS-Cloud at https://cloud.cambiumnetworks.com or https://login.xirrus.com respectively.
Mobile App	Access Point can be managed by using the Swift App. Scan QR code on the right to download from app store and follow the instructions.

For cloud and App management, please ensure the AP has connectivity to the internet. Connectivity can be verified using tools such as ping from the 'Troubleshooting' tab of the Access Point GUI. Connection status can be monitored from the AP dashboard.

AP Řízení

CZ

Samostatný	APřístupový bod lze spravovat přímo z jeho grafického rozhraní tím, že vyberete kartu "Konfigurovat" v nabídce a nastavíte bezdrátovou síť LAN.
Na místě	Přístupový bod může být integrován do systému řízení sítě cnMaestro.
Cloud	Přístupový bod lze zapnout do cnMaestro Cloud nebo XMS-Cloud na adrese https://cloud.cambiumnetworks.com or https://login.xirrus.com respectively.
Mobilní aplikace	Přístupový bod lze spravovat pomocí aplikace Swift. Chcete -li si stáhnout aplikaci Swift z App Store, naskenujte QR kód a postupujte podle pokynů.

Pro správu z cloudu a Aplikace se ujistěte, že AP má připojení k internetu. Připojení lze ověřit pomocí nástrojů, jako je ping z karty "Odstraňování problémů" v GUI Access Point. Stav připojení lze sledovat z panelu AP.

AP La gestion

FR

Autonome	Le point d'accès peut être géré directement à partir de son interface graphique en sélectionnant l'onglet 'Configurer' du menu et en configurant un réseau local sans fil.
Sur site	Le point d'accès peut être intégré au système de la gestion réseau le cnMaestro.
Nuage	Le point d'accès peut être intégré à cnMaestro Cloud ou XMS-Cloud à https://cloud.cambiumnetworks.com ou https://login.xirrus.com respectivement.
Application mobile	Le point d'accès peut être géré à l'aide de l'application Swift. Pour télécharger l'application Swift depuis l'App Store, scannez le code QR et suivez les instructions.

Pour la gestion depuis le cloud Et application, assurez-vous que le point d'accès dispose d'une connectivité à Internet. La connectivité peut être vérifiée à l'aide d'outils, tels que le ping, dans l'onglet 'Dépannage' de l'interface graphique d'Access Point. L'état de la connexion peut être surveillé à partir du tableau de bord AP.

AP Verwaltung

DE

Eigenständige	Der Access Point kann direkt von der GUI aus verwaltet werden, indem Sie im Menü die Registerkarte "Konfigurieren" auswählen und ein WLAN einrichten.
On-Premise	Access Point kann in das der cnMaestro-Netzwerkmanagementsystem integriert werden
Cloud	Access Point kann unter https://cloud.cambiumnetworks.com oder https://login.xirrus.com in cnMaestro Cloud oder XMS-Cloud übernommen werden.
Mobile App	Access Point kann mit der Swift-Anwendung verwaltet werden. Um die Swift-Anwendung aus dem App Store herunterzuladen, scannen Sie den QR-Code und befolgen Sie die Anweisungen.

Stellen Sie für das Management über die Cloud Und App sicher, dass der AP eine Verbindung zum Internet hat. Die Konnektivität kann mit Tools wie dem Ping auf der Registerkarte "Fehlerbehebung" der Access Point-Benutzeroberfläche überprüft werden. Der Verbindungsstatus kann vom AP-Dashboard aus überwacht werden.

AP menedzsment

HU

Önálló (staTndalone)	A hozzáférési pont (AP, Access Point) közvetlenül menedzselhető annak grafikus felületén keresztül; ehhez a menüből ki kell választani a Konfigurálás („Configure") fület, és be kell állítani egy vezeték nélküli helyi hálózatot (wireless LAN).
A helyszínen	A hozzáférési pont felvehető (onboarding) a cnMaestro vezérlés-rendszerbe – akár saját eszközös módon.
Cloud	A hozzáférési pont külön-külön vagy cnMaestro Cloudba vagy XMS-Cloudba integrálható a következőről: https://cloud.cambiumnetworks.com vagy https://login.xirrus.com.
Mobil alkalmazás	A hozzáférési pont a Swift alkalmazással kezelhető. A Swift alkalmazás letöltéséhez az App Store -ból olvassa be a QR -kódot, és kövesse az utasításokat.

Felhőből és az App végzett menedzseléshez gondoskodni kell arról, hogy az AP rendelkezzen internetkapcsolattal. A kapcsolat működőképessége ellenőrizhető például a hozzáférési pont grafikus felületén, a Hibaelhárítás („Troubleshooting") fülön lévő ping funkcióval. A kapcsolat állapota (status) az AP fő kezelőpaneljén (dashboard) kísérhető figyelemmel.

Gestione AP

IT

Autonomo	L'Access Point può essere gestito direttamente tramite la sua GUI, selezionando la scheda "Configure" nel menu e configurando una rete LAN wireless.
On-premise	L'onboarding dell'Access Point su un sistema di gestione della rete il cnMaestro può essere eseguito.
Cloud	L'Access Point può essere integrato su cnMaestro Cloud oppure su XMS-Cloud, rispettivamente da https://cloud.cambiumnetworks.com o da https://login.xirrus.com.
App per dispositivi mobili	Access Point può essere gestito utilizzando l'applicazione Swift. Per scaricare l'applicazione Swift dall'App Store, scansiona il codice QR e segui le istruzioni.

Per la gestione su cloud e App, assicurarsi che l'AP sia connesso a Internet. La connessione può essere verificata usando strumenti come il ping dalla scheda "Troubleshooting" nella GUI dell'Access Point. Lo stato della connessione può essere monitorato tramite la dashboard dell'AP.

Gestión AP

ES

Unidad independiente	El punto de acceso se puede administrar directamente desde su interfaz gráfica de usuario al seleccionar la pestaña "Configure" (Configuración) en el menú y configurando una LAN inalámbrica.
En oficina	El punto de acceso se puede integrar en el sistema de gestión de red la cnMaestro.
Nube	Se puede acceder al punto de acceso con Maestro Cloud o XMS-Cloud desde https://cloud.cambiumnetworks.com or https://login.xirrus.com respectivamente.
Aplicación movil	El punto de acceso se puede administrar mediante la aplicación Swift. Para descargar la aplicación Swift de la App Store, escanee el código QR y siga las instrucciones.

Para realizar la administración desde la nube y aplicación, asegúrese de que el punto de acceso tiene conexión a Internet. La conectividad se puede comprobar con herramientas como ping desde la pestaña "Troubleshooting" (Solución de problemas) de la interfaz gráfica de usuario del punto de acceso. El estado de conexión se puede supervisar desde el panel de control del punto de acceso.

AP Yönetimi

TR

Bağımsız	Erişim Noktası menüde 'Yapılandır' sekmesi seçilip, bir kablosuz yerel ağ kurularak kendi grafik kullanıcı arayüzü (GUI) üzerinden yönetilebilir.
Tesislerde	Erişim Noktası sürümü cnMaestro ağ yönetim sistemine eklenebilir.
Bulut	Erişim Noktası devreye alma işlemi, cnMaestro Bulutu veya XMS-Bulutu üzerinden aynı sırayla https://cloud.cambiumnetworks.com veya https://login.xirrus.com ile gerçekleştirilebilir.
Mobil uygulama	Erişim Noktası Swift uygulaması kullanılarak yönetilebilir. Swift uygulamasını App Store'dan indirmek için QR kodunu tarayın ve talimatları izleyin.

Bulut ve Uygulama üzerinden yönetim için lütfen Erişim Noktası'nın (AP) internet bağlantısı olmasını sağlayın. İnternet bağlanılabilirliği Erişim Noktası grafik kullanıcı arayüzü (GUI) üzerindeki 'Sorun Giderme' sekmesinden ping yapma gibi araçlar kullanarak doğrulanabilir. Bağlantı durum bilgisi Erişim Noktası (AP) panosundan izlenebilir.

Управление точкой доступа

RU

В одиночку	Точкой доступа можно управлять непосредственно из её графического пользовательского интерфейса, для чего нужно выбрать вкладку 'Настройка' в меню и настроить беспроводную локальную сеть.
В-помещения	Точку доступа можно подключить к системе управления сетями cnMaestro.
облаю	Точку доступа можно подключить к cnMaestro Cloud или XMS-Cloud по адресу https://cloud.cambiumnetworks.com или https://login.xirrus.com соответственно.
Мобильное приложение	Точкой доступа можно управлять с помощью приложения Swift. Чтобы загрузить приложение Swift из App Store, отсканируйте QR-код и следуйте инструкциям.

Для управления из облака и приложение убедитесь, что у точки доступа есть доступ к интернету. Наличие связи можно проверить при помощи инструмента ping на вкладке 'Устранение неисправностей' графического интерфейса точки доступа. Состояние подключения можно контролировать на панели состояния точки доступа.

Swift READY

Download on the App Store

GET IT ON Google Play

Install Guide

Pole mount with Level Bracket

Step 2

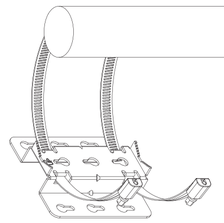

Step 3

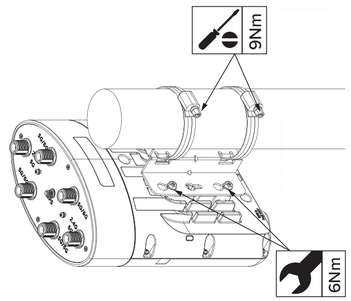

Powering up

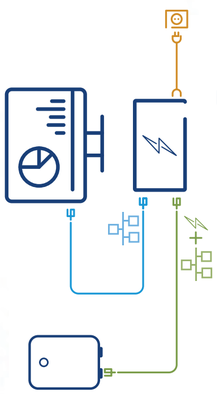

DHCP/192.168.0.1 http://192.168.0.1 admin/admin

cnMaestro Essentials and cnMaestro X

1. Visit **cloud.cambiumnetworks.com** and register as a new user or sign-in with the existing credentials.
2. Create a new cnMaestro account or select an existing account.
3. **To add AP serial numbers:** Navigate to **cnMaestro Home > Devices > Onboarding**
4. Connect the AP to the internet. It appears in the cnMaestro **Devices** page in a few minutes. Approve the device to complete onboarding

cnMaestro On-Premises

Consult user documentation to redirect the AP to an On-Premises cnMaestro management server.

XMS-Cloud

1. Copy the Entitlement ID (EID) sent via email. Then navigate to **support.cambiumnetworks.com > Licensing > Add Entitlement**

   New Customers: Create an account and login using the credentials that is sent by email.
2. **Existing Customers:** Enter EID to activate licenses for new APs.
3. Navigate to **Devices**. Enter AP serial numbers: Origin, XMS-Cloud UI, and add serial numbers.
4. Connect AP to the internet. It appears in the XMS-Cloud UI in a few minutes.

Swift Mobile App

1. Download the **Cambium Networks Swift** app from the Google Play Store or Apple App Store.
2. Open Swift and follow the environment instructions.

https://support.cambiumnetworks.com

Package Content

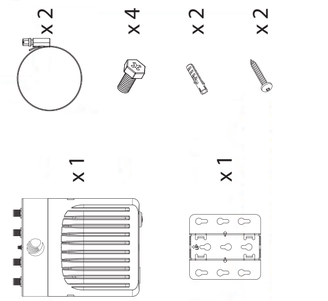

Wall mount with Level Bracket

Step 1

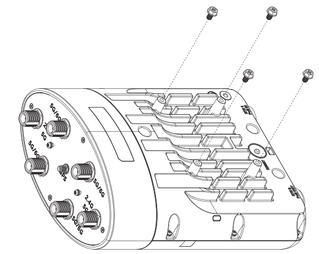

Step 2

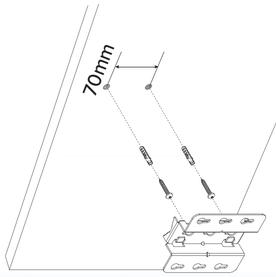
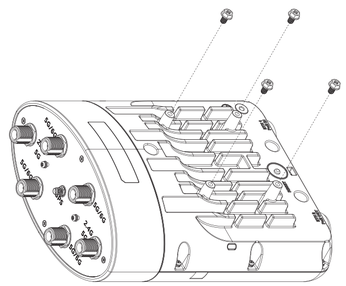
Step 3