Cambium Networks™

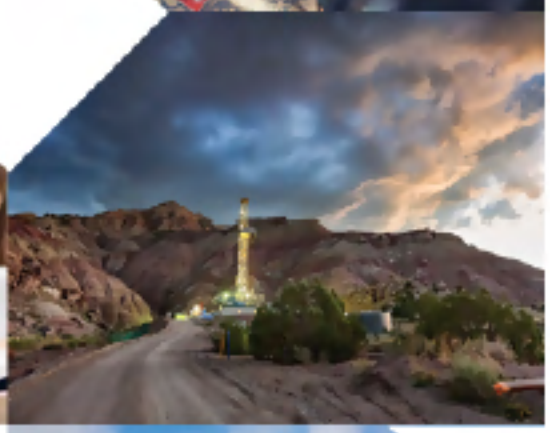

HARDWARE AND INSTALLATION GUIDE

Enterprise Wi-Fi 6 and 7 Access Point

Reservation of Rights

Cambium reserves the right to make changes to any products described herein to improve reliability, function, or design, and reserves the right to revise this document and to make changes from time to time in content hereof with no obligation to notify any person of revisions or changes. Cambium recommends reviewing the Cambium Networks website for the latest changes and updates to products. Cambium does not assume any liability arising out of the application or use of any product, software, or circuit described herein; neither does it convey license under its patent rights or the rights of others. It is possible that this publication may contain references to, or information about Cambium products (machines and programs), programming, or services that are not announced in your country. Such references or information must not be construed to mean that Cambium intends to announce such Cambium products, programming, or services in your country.

Copyrights

This document, Cambium products, and 3rd Party software products described in this document may include or describe copyrighted Cambium and other 3rd Party supplied computer programs stored in semiconductor memories or other media. Laws in the United States and other countries preserve for Cambium, its licensors, and other 3rd Party supplied software certain exclusive rights for copyrighted material, including the exclusive right to copy, reproduce in any form, distribute and make derivative works of the copyrighted material. Accordingly, any copyrighted material of Cambium, its licensors, or the 3rd Party software supplied material contained in the Cambium products described in this document may not be copied, reproduced, reverse engineered, distributed, merged or modified in any manner without the express written permission of Cambium. Furthermore, the purchase of Cambium products shall not be deemed to grant either directly or by implication, estoppel, or otherwise, any license under the copyrights, patents or patent applications of Cambium or other 3rd Party supplied software, except for the normal non-exclusive, royalty free license to use that arises by operation of law in the sale of a product.

Restrictions

Software and documentation are copyrighted materials. Making unauthorized copies is prohibited by law. No part of the software or documentation may be reproduced, transmitted, transcribed, stored in a retrieval system, or translated into any language or computer language, in any form or by any means, without prior written permission of Cambium.

License Agreements

The software described in this document is the property of Cambium and its licensors. It is furnished by express license agreement only and may be used only in accordance with the terms of such an agreement.

High Risk Materials

Cambium and its supplier(s) specifically disclaim any express or implied warranty of fitness for any high-risk activities or uses of its products including, but not limited to, the operation of nuclear facilities, aircraft navigation or aircraft communication systems, air traffic control, life support, or weapons systems (“High Risk Use”).

This product is not restricted in the EU. Any High Risk is unauthorized, is made at your own risk and you shall be responsible for any and all losses, damage or claims arising out of any High-Risk Use.

© 2025 Cambium Networks Limited. All rights reserved

Contents

Contents 3

About this Guide 6

Overview of Cambium Networks products 6

Intended audience 7

Purpose 7

Related documents 7

Existing hardware platforms 7

Access Point (AP) management options 8

XMS-Cloud 9

cnMaestroTM Essentials and cnMaestroTM X 9

cnMaestroTM On-Premises 10

Reporting issues 10

Security advice 10

Safety and regulatory information 11

Important safety information 11

Power lines 11

Working at heights 11

Moving AP location 11

Grounding and protective earth 11

Powering down before servicing 12

Primary disconnect device 12

RF exposure near the antenna 12

Important regulatory information 12

Radar avoidance 13

Human exposure to radio frequency energy 13

Europe specific information 14

USA and Canada specific information 14
Federal Communication Commission interference statement 14
Operation in the USA 15
Operation in Canada 16
Specific expertise and training required for professional installers 17
Avoidance of weather radars 17
Ethernet networking skill 18
Ethernet cabling types 18
Pole or tower mount guidelines 19
Wall mount guidelines 20
Training 21
Power density exposure limit 21
Calculation of power density and distance 22
Calculated distances and power compliance margins 23
Best practice for outdoor installation 25
Cambium Networks outdoor APs 25
Recommended outdoor Wi-Fi deployments by Cambium Networks 26
Packaging and Installation of Access Point 32
Unpacking the Access Point 32
Package contents 32
Mounting the device 32
Mounting XV3-8 34
Mounting XE5-8 38
Mounting XV2-2 42
Mounting XV2-2T0/XV2-2T1 46
Mounting XE3-4 52
Mounting XE3-4TN 57
Mounting XV2-21X 66

Mounting XV2-23T 70
Mounting XV2-22H 73
Mounting X7-35X 75
Unlocking the Enterprise Wi-Fi 7 AP bracket 80
Cambium Networks **81**

About this Guide

This chapter describes the following topics:

- Overview of Cambium Network products
- Intended audience
- Purpose
- Related documents
- Existing hardware platforms
- Access Point (AP) management options
- Reporting problems
- Security advice
- Safety and regulatory information
- Human exposure to radio frequency energy
- USA and Canada specific information
- Specific expertise and training required for professional installers
- Avoidance of weather radars
- Ethernet networking skills
- Ethernet cabling types
- Pole or tower mount guidelines
- Wall mount guidelines
- Training
- Power density exposure limit
- Best practice for outdoor installation

Overview of Cambium Networks products

This guide describes various features supported by Cambium Network's Access Point (AP). It also provides detailed instructions for setting up and configuring the AP.

Intended audience

The guide is intended to assist system designers, system installers, and system administrators.

Purpose

This guide intends to instruct and assist personnel in the operation, installation, and maintenance of Cambium Networks equipment and ancillary devices. It is recommended that all personnel engaged in such activities must be trained properly.

Cambium Networks disclaims all liability whatsoever, implied or expressed, for any risk of damage, loss or reduction in system performance arising directly or indirectly out of the failure of the customer, or anyone acting on the customer's behalf, to abide by the instructions, system parameters, or recommendations made in this document.

Related documents

Table 1 provides support information for the AP (Enterprise Wi-Fi 6 and 7 products).

Table 1 *Related documents*

Document Type	Link for Reference
Enterprise Wi-Fi AP product details	https://www.cambiumnetworks.com/products/wifi/
Enterprise Wi-Fi AP Hardware and Installation Guide (This document)	https://support.cambiumnetworks.com/files
Enterprise Wi-Fi AP User Guide	https://support.cambiumnetworks.com/files
Enterprise Wi-Fi AP Release Notes	https://support.cambiumnetworks.com/files
Enterprise Wi-Fi AP Command-Line Interface Reference Guide	https://support.cambiumnetworks.com/files
Software Resources	https://support.cambiumnetworks.com/files
Community	http://community.cambiumnetworks.com/
Support	https://www.cambiumnetworks.com/support/contact-support/
Warranty	https://www.cambiumnetworks.com/support/warranty/
Feedback	For feedback, email to support@cambiumnetworks.com

Existing hardware platforms

Table 2 lists the existing hardware platforms in Enterprise Wi-Fi Access Points:

Table 2 List of existing hardware platforms

Hardware Platfrom	Description	Supported Software Version
XV3-8	8x8:8, 4x4:4 802.11a/b/g/n/ac wave 2/ax Tri-Radio Indoor Access Point	Release 6.0 and above
XV2-2	2x2:2, 2x2:2 802.11a/b/g/n/ac wave 2/ax Dual-Radio Indoor Access Point	Release 6.1 and above
XV2-2T0	2x2:2, 2x2:2 802.11a/b/g/n/ac wave 2/ax Dual-Radio Outdoor Access Point, Omni, PoE out	Release 6.3.5.1 and above
XV2-2T1	Outdoor Wi-Fi 6 Access point, 2x2 Sector antenna Dual band 802.11ax 2x2, BLE, 2.5GbE	Release 6.4.1 and above
XV2-22H	2x2:2, 2x2:2 802.11a/b/g/n/ac wave 2/ax Dual-Radio Indoor Wi-Fi 6 Wall-Plate Access Point	Release 6.5 and above
XV2-21X	2x2:2, 2x2:2 802.11a/b/g/n/ac wave 2/ax Dual-Radio Indoor Wi-Fi 6 Access Point	Release 6.5 and above
XV2-23T	2x2:2, 2x2:2 802.11a/b/g/n/ac wave 2/ax Dual-Radio Outdoor Wi-Fi 6 Access Point	Release 6.5 and above
XE3-4	4x4:4; 2x2:2; 2x2:2 802.11a/b/g/n/ac wave 2/ax Tri-Radio Indoor Wi-Fi 6e Access Point	Release 6.4 and above
XE3-4TN	4x4:4, 2x2:2, 2x2:2 802.11b/g/n/ac wave 2/ax Tri-Radio Outdoor Wi-Fi 6e Access point	• Release 6.5.1 and above • Release 6.6.2 and above to support 6 GHz LPI **Note**: Low Power Indoors (LPI) is for indoor use only
XE5-8	8x8:8, 4x4:4, 4x4:4, 4x4:4 802.11a/b/g/n/ac wave 2/ax Tri-Band AP with multi-radio SDR	Release 6.4.1 and above
X7-35X	2x2:2 802.11b/g/n/ac/ax/be Tri-Radio Indoor Wi-Fi 7 Access Point with IoT radio	Release 7.0 and above

Access Point (AP) management options

Table 3 AP management options

Management Option	Description
On-Premises	Manage APs locally on your own data center through cnMaestro™ On-Premises
Cloud	Manage APs through any of the cloud-based network management systems:

Management Option	Description
	• cnMaestro™ Cloud at https://cloud.cambiumnetworks.com—Supports management of Wi-Fi 6 and 7 APs • XMS-Cloud at https://xcs.cloud.xirrus.com/—Supports management of Wi-Fi 6 APs only

Note

For cloud and mobile application management, please ensure the AP has connectivity to the internet. Connectivity can be verified using tools such as ping from the **Troubleshooting** tab of the AP UI. Connection status can be monitored from the AP dashboard.

XMS-Cloud

Note

XV2-21X, XV2-23T, X7-35X APs are not supported on XMS-Cloud.

1. Copy the Entitlement ID (EID), received by email.
2. Login to https://support.cambiumnetworks.com/.

   If you are a new customer, then create a new account and login using the credentials that are sent by email.

   The Support Center homepage appears.
3. Go to **Licensing** > **Activate Entitlements**.
4. Enter the EID to activate licenses for new APs.
5. Login to https://xcs.cloud.xirrus.com/.
6. Go to **Access Points** > **Add/Remove** and click **ADD AP TO ACCOUNT**.
7. Enter the AP serial number and click **ADD TO ACCOUNT**.
8. Connect AP to the internet.

   The AP is displayed in the XMS-Cloud **Access Point** page after a few minutes.

cnMaestro™ Essentials and cnMaestro™ X

1. Navigate to https://cloud.cambiumnetworks.com/ and register as a new user or sign-in with the existing credentials.
2. Create a new cnMaestro™ account or select an existing account.

3. To add AP serial numbers, go to **cnMaestro Home** > **Onboard Devices** > **Claim Device**.
4. Connect the AP to the internet.

   APs appear in the cnMaestro™ **Devices** page after a few minutes.
5. Approve the devices to complete onboarding.

cnMaestro™ On-Premises

Refer to the user documentation to redirect the AP to an On-Premises cnMaestro management server.

For support, go to https://support.cambiumnetworks.com/.

> **Note**
>
> Enterprise Wi-Fi 6 and 7 APs have a QR code that helps the customer to get to the quick start instructions.

Reporting issues

If you encounter any issues when installing or operating this equipment, follow this procedure to investigate and report:

1. Search this document and the software release notes of supported releases.
2. Visit the Support website: http://www.cambiumnetworks.com/support.
3. Ask for assistance from the Cambium product supplier.
4. Gather information from affected units, such as any available diagnostic downloads.
5. Escalate the problem by emailing or telephoning support: https://www.cambiumnetworks.com/support/contact-support/.

Security advice

Cambium Network's systems and equipment provide security parameters that can be configured by the operator based on their particular operating environment. Cambium recommends setting and using these parameters following industry recognized security practices. Security aspects to be considered are protecting the confidentiality, integrity, and availability of information and assets. Assets include the ability to communicate, information about the nature of the communications, and information about the parties involved.

In certain instances, Cambium makes specific recommendations regarding security practices, however the implementation of these recommendations and final responsibility for the security of the system lies with the operator of the system.

Cambium Network's Enterprise AP equipment is shipped with default web management interface login credentials. It is highly recommended that the following default username and password should be modified prior to system installation.

- Username: admin
- Password: admin

Safety and regulatory information

This section describes important safety and regulatory guidelines that must be observed by personnel installing or operating Enterprise Access Point equipment.

Important safety information

Warning

To prevent loss of life or physical injury, observe the safety guidelines in this section.

Power lines

Exercise extreme care when working near power lines.

Working at heights

Exercise extreme care when working at heights.

Moving AP location

Turn off radios on the AP before moving, removing, or adjusting the AP location after installation.

Grounding and protective earth

Cambium Networks Enterprise Access Point (AP) devices must be properly grounded to protect against lightning. It is the responsibility of the user to install the equipment in accordance with national regulations. In the USA, follow Section 810 of the National Electric Code, ANSI/NFPA No.70-1984 (USA). In Canada, follow Section 54 of the Canadian Electrical Code. These codes describe correct installation procedures for grounding the outdoor unit, mast, lead-in wire and discharge unit, size of grounding conductors and connection requirements for grounding electrodes. Other regulations may apply in different countries and therefore it is recommended that installation be contracted to a professional installer.

Recommendation for earth grounding

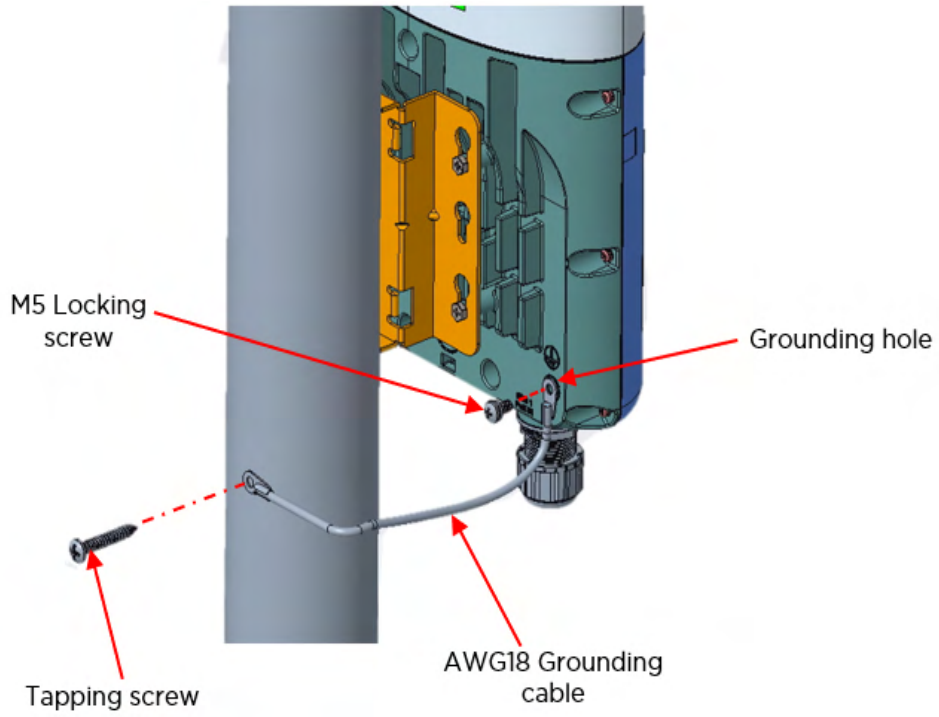

For grounding hole (XV2-2T and XE3-4T platforms):

- Use M5 screw with lock washer
- Use AWG18 grounding cable

The other side of the grounding cable must be permanently connected to the earth ground of the building.

Powering down before servicing

Always power down and unplug the equipment before servicing.

Primary disconnect device

The Enterprise AP power supply is the primary disconnect device.

RF exposure near the antenna

Strong Radio Frequency (RF) fields will be present close to the antenna when the transmitter is ON. Always turn OFF the power to the AP device before undertaking maintenance activities in front of the antenna.

Important regulatory information

The Enterprise Wi-Fi 6 and 7 APs are certified as an unlicensed device in frequency bands where it is not allowed to cause interference to licensed services (called primary users of the bands).

Radar avoidance

In countries where radar systems are the primary band users, the regulators have mandated special requirements to protect these systems from interference caused by unlicensed devices. Unlicensed devices must detect and avoid co-channel operation with radar systems.

The Enterprise Wi-Fi 6 and 7 APs detect and avoid functionality for countries and frequency bands requiring protection for radar systems. The Enterprise Wi-Fi 6 and 7 APs are qualified for ETSI/FCC DFS certification (see Note) for radar detection and avoidance as per the law.

Note

Country-specific limits apply, some bands require Dynamic Frequency Selection (DFS). DFS bands operation subject to regulatory approval. Check Software release notes for details.

Installers and users must meet all local regulatory requirements for radar detection. To meet these requirements, users must set the correct country code during commissioning of the Enterprise Wi-Fi 6 and 7 APs equipment. If this is not done, installers and users may be liable to civil and criminal penalties.

Contact Cambium Networks helpdesk for support.

Human exposure to radio frequency energy

Relevant standards (USA and EC) applicable when working with RF equipment are:

- ANSI IEEE C95.1-1991, IEEE Standard for Safety Levels with Respect to Human Exposure to Radio Frequency Electromagnetic Fields, 3 kHz to 300 GHz.
- Council recommendation of 12 July 1999 on the limitation of exposure of the general public to electromagnetic fields (0 Hz to 300 GHz) (1999/519/EC) and respective national regulations.
- Directive 2013/35/EU of the European Parliament and of the Council of 26 June 2013 on the minimum health and safety requirements regarding the exposure of workers to the risks arising from physical agents (electromagnetic fields) (20th individual Directive within the meaning of Article 16(1) of Directive 89/391/EEC) and repealing Directive 2004/40/EC.
- US FCC limits for the general population. See the FCC website at https://www.fcc.gov/, and the policies, guidelines, and requirements in Part 1 of Title 47 of the Code of Federal Regulations, as well as the guidelines and suggestions for evaluating compliance in FCC OET Bulletin 65.
- Health Canada limits for the general population. See the Health Canada website athttp://www.hc-sc.gc.ca/ewh-semt/pubs/radiation/radio_guide-lignes_direct/index-eng.php and Safety Code 6.
- BS EN 62232:2017: Determination of RF field strength, power density, and SAR in the vicinity of radiocommunication base stations for the purpose of evaluating human exposure (IEC 62232:2017).
- BS EN 50385:2017: Product standard to demonstrate the compliance of base station equipment with radiofrequency electromagnetic field exposure limits (110 MHz - 100 GHz), when placed on the market.

- ICNIRP (International Commission on Non-Ionizing Radiation Protection) guidelines for the general public. See the ICNIRP website at http://www.icnirp.de/ and Guidelines for Limiting Exposure to Time-Varying Electric, Magnetic, and Electromagnetic Fields.

Europe specific information

CE statement

This equipment complies with EU radiation exposure limits set forth for an uncontrolled environment. This equipment should be installed and operated with minimum distance 20 cm between the radiator and your body.

USA and Canada specific information

Warning

Devices shall not be used for control of or communications with unmanned aircraft systems.

Les appareils ne doivent pas être utilisés pour contrôler ou communiquer avec des systèmes d'aéronefs sans pilote.

Operation on oil platforms, automobiles, trains, maritime vessels and aircraft shall be prohibited.

L'exploitation sur les plates-formes pétrolières, les automobiles, les trains, les navires maritimes et les aéronefs est interdite.

The antenna height shall be determined by the installer or operator of the standard-power access point or fixed client device, or by automatic means. This information shall be stored internally in the device. Provision of accurate device information is mandatory.

La hauteur de l'antenne doit être déterminée par l'installateur ou l'opérateur du point d'accès à puissance standard ou de l'appareil client fixe, ou par des moyens automatiques. Ces informations doivent être stockées en interne dans l'appareil. La fourniture d'informations précises sur l'appareil est obligatoire.

Federal Communication Commission interference statement

This equipment has been tested and found to comply with the limits for a Class B digital device, pursuant to Part 15 of the FCC Rules. These limits are designed to provide reasonable protection against harmful interference in a residential installation. This equipment generates, uses and can radiate radio frequency energy and, if not installed and used in accordance with the instructions, may cause harmful interference to radio communications. However, there is no guarantee that interference will not occur in a particular installation. If this equipment does cause harmful interference to radio or television reception, which can be determined by turning the equipment off and on, the user is encouraged to try to correct the interference by one of the following measures:

- Reorient or relocate the receiving antenna.
- Increase the separation between the equipment and receiver.

- Connect the equipment into an outlet on a circuit different from that to which the receiver is connected.
- Consult the dealer or an experienced radio/TV technician for help.

Attention

Any changes or modifications not expressly approved by the party responsible for compliance could void the user's authority to operate this equipment.

This device complies with Part 15 of the FCC Rules. Operation is subject to the following two conditions:

- This device may not cause harmful interference.
- This device must accept any interference received, including interference that may cause undesired operation.

For products available in the USA and Canada markets, only channels 1 through 11 can be operated. Selection of other channels is not possible.

This device and its antennas(s) must not be co-located or operating in conjunction with any other antenna or transmitter except in accordance with FCC multi-transmitter product procedures.

Operation in the USA

This device complies with Part 15 of the FCC Rules. Operation is subject to the following two conditions.

1. This device may not cause harmful interference, and
2. This device must accept any interference received, including interference that may cause undesired operation.

For product available in the USA market, only channels 1 to 11 for the 2.4 GHz band can be operated. Selection of other channels is not possible.

FCC Radiation Exposure Statement

This equipment complies with FCC radiation exposure limits set forth for an uncontrolled environment. This equipment should be installed and operated with minimum distance of 62 cm (24.40 inches) between the radiator and your body. This equipment has been tested and found to comply with the limits for a Class B digital device, pursuant to Part 15 of the FCC Rules. These limits are designed to provide reasonable protection against harmful interference in a residential installation. This equipment generates, uses and can radiate radio frequency energy and, if not installed and used in accordance with the instructions, may cause harmful interference to radio communications. However, there is no guarantee that interference will not occur in a particular installation. If this equipment does cause harmful interference to radio or television reception, which can be determined by turning the equipment off and on, the user is encouraged to try to correct the interference by one of the following measures:

- Reorient or relocate the device.
- Increase the separation between the equipment and receiver.

- Connect the equipment into an outlet on a circuit different from that which the receiver is connected.
- Consult the dealer or an experienced radio/TV technician for help.

FCC 6 GHz Statement

The operation of this device is prohibited on oil platforms, cars, trains, boats, and aircraft, except that operation of this device is permitted in large aircraft while flying above 10,000 feet in the 5.925 - 6.425 GHz band.

Operation of transmitters in the 5.925 - 7.125 GHz band is prohibited for control of or communications with unmanned aircraft systems

For US, following are the FCC IDs:

- XE3-4TN: Z8H89FT0073

Operation in Canada

ISED statement

This device complies with 'Innovation, Science and Economic Development (ISED) Canada' license-exempt RSS standard(s). Operation is subject to the following two conditions: (1) this device may not cause interference, and (2) this device must accept any interference, including interference that may cause undesired operation of the device.

Le présent appareil est conforme aux CNR d'Industrie Canada applicables aux appareils radio exempts de licence. L'exploitation est autorisée aux deux conditions suivantes : (1) l'appareil ne doit pas produire de brouillage, et (2) l'utilisateur de l'appareil doit accepter tout brouillage radioélectrique subi, même si le brouillage est susceptible d'en compromettre le fonctionnement.

For product available in the Canada market, only channels 1 to 11 can be operated. Selection of other channels is not possible. Pour les produits disponibles aux Canada du marché, seul le canal 1 à 11 peuvent être exploités. Sélection d'autres canaux n'est pas possible.

ISED Radiation Exposure Statement

This equipment complies with IC RSS-102 radiation exposure limits set forth for an uncontrolled environment. This equipment should be installed and operated with minimum distance 36 cm between the radiator and your body.

Cet équipement est conforme aux limites d'exposition aux rayonnements IC établies pour un environnement non contrôlé. Cet équipement doit être installé et utilisé avec un minimum de 36 cm de distance entre la source de rayonnement et votre corps.

ISED 6 GHz Statement

The operation of this device is prohibited on oil platforms, cars, trains, boats, and aircraft, except that operation of this device is permitted in large aircraft while flying above 10,000 feet in the 5.925 - 6.425 GHz band.

Operation of transmitters in the 5.925 - 7.125 GHz band is prohibited for control of or communications with unmanned aircraft systems

For Canada, following are the IC IDs:

- XE3-4TN: 109W-0073

Specific expertise and training required for professional installers

To ensure that the Enterprise Wi-Fi 6 and 7 APs are installed and configured in compliance with the requirements of Industry Canada and the FCC, installers must have the radio engineering skills and training described in this section. This is particularly important when installing and configuring an Enterprise Wi-Fi 6 or 7 AP system for operation in the 5 GHz or 6 GHz bands (5150 – 5250 MHz, 5250 – 5350 MHz, 5470 – 5725 MHz, 5725 – 5895 MHz, 5925 – 6425 MHz, and 6425 – 7125 MHz).

Avoidance of weather radars

The installer must be familiar with the requirements in FCC KDB 443999. Essentially, the installer must be able to:

- Access the FCC database of weather radar location and channel frequencies.
- Use this information to correctly configure the product (using the UI) to avoid operation on channels that must be avoided according to the guidelines that are contained in the KDB and explained in detail in this user guide.
- In ETSI regions, the band 5600 MHz – 5650 MHz is reserved for the use of weather radars.

Warning (for XE3-4TN)

This radio transmitter [109W-0073] has been approved by Innovation, Science and Economic Development Canada to operate with the antenna types listed below, with the maximum permissible gain indicated. Antenna types not included in this list that have a gain greater than the maximum gain indicated for any type listed are strictly prohibited for use with this device.

Le présent émetteur radio (109W-0073) a été approuvé par Innovation, Sciences et Développement économique Canada pour fonctionner avec les types d'antenne énumérés ci-dessous et ayant un gain admissible maximal d'antenne. Les types d'antennes non inclus dans cette liste qui ont un gain supérieur au gain maximal indiqué pour tout type listé sont strictement interdits pour une utilisation avec cet appareil.

Set	Brand	Model Number	Antenna Type	Net Gain (dBi)				
				WLAN 2.4 GHz	Bluetooth	5 GHz UNII 2A	5 GHz UNII 2C, 3	6 GHz (5925-7125 MHz)
1	Lynwave	ALX22X-121050-00	Dipole	4.4	-	5.5	5.5	5.5

Set	Brand	Model Number	Antenna Type	Net Gain (dBi)				
				WLAN 2.4 GHz	Bluetooth	5 GHz UNII 2A	5 GHz UNII 2C, 3	6 GHz (5925-7125 MHz)
2	Smartant	SAA19-220130	Dipole	3	-	5	6	-
3	Lynwave 6SD	OLX22X-127130-A	Patch	-	-	9.55	9.4	9.32
4	EAHiSON	ANT-DIR15-2X2-2.4G-01	Panel	17.23	-	-	-	-
5	KBT	ANT-DIR15-2X2-5.0G-01	Panel	-	-	16.55	16.4	-
3	Lynwave	OLX22X-127130A	Patch	-		-	-	9.75(6ID)
8	Lynwave	OLX22X-127141-A	Panel	- -	-	-	-	11.75(6ID)
8	Lynwave	OLX22X-127141-A	Panel	- -	-	-	-	11.32(6SD)

The maximum antenna gain permitted for devices in the bands 5250 – 5350 MHz and 5470 – 5725 MHz shall be such that the equipment still complies with the EIRP limit.

le gain maximal d'antenne permis pour les dispositifs utilisant les bandes 5250 – 5350 MHz et 5470 – 5725 MHz doit se conformer à la limite de p.i.r.e.

The maximum antenna gain permitted for devices in the band 5725 – 5850 MHz shall be such that the equipment still complies with the EIRP limits specified for point-to-point and non-point-to-point operation as appropriate.

le gain maximal d'antenne permis (pour les dispositifs utilisant la bande 5725 – 5850 MHz) doit se conformer à la limite de p.i.r.e. spécifiée pour l'exploitation point à point et non point à point, selon le cas.

Ethernet networking skill

The installer must have the ability to configure IP addressing on a PC and to set up and control products using a web browser interface.

Ethernet cabling types

Following are the recommended Ethernet cabling types for various APs which has Multi-gigabit capable Ethernet ports:

- 2.5 Gbps—
  - XV2-2, XV2-2T, XE3-4, XE3-4TN
  - X7-35X
- 5 Gbps—XV3-8, XE5-8

For 2.5 Gbps, Cambium Networks recommends CAT6 cable or better to cover the 100 m maximum cable length. For shorter lengths under 30 m, CAT5E cable is recommended. For high radio frequency electric fields environments, shielded CAT5E or CAT6 type cable is recommended.

For 5 Gbps, Cambium Networks recommends CAT6 cable for lengths under 50 m and CAT6a cable for lengths above 50 m up to the maximum of 100 m. Shielding cables must be used and the shielded CAT6/CAT6a cables must be continuous from the AP to its Ethernet switch.

Pole or tower mount guidelines

If you need to install AP to a metal tower or pole, then in addition to the general protection requirements, follow the below requirements:

- Ensure that the position of the equipment is lower than the top of the tower or its lightning air terminal.
- Ensure that the metal tower or pole is correctly grounded.
- Install a grounding kit at the first point of contact (top), between the drop cable and the tower.
- Install a grounding kit at the bottom of the tower, near the vertical to horizontal transition point.

Note

If grounding kit is installed, ensure the grounding kit is bonded to the tower or Tower Ground Bus Bar (TGB).

Connection examples of pole or tower installations are shown in below figure.

Figure 1 *Grounding and lightning protection on pole or tower*

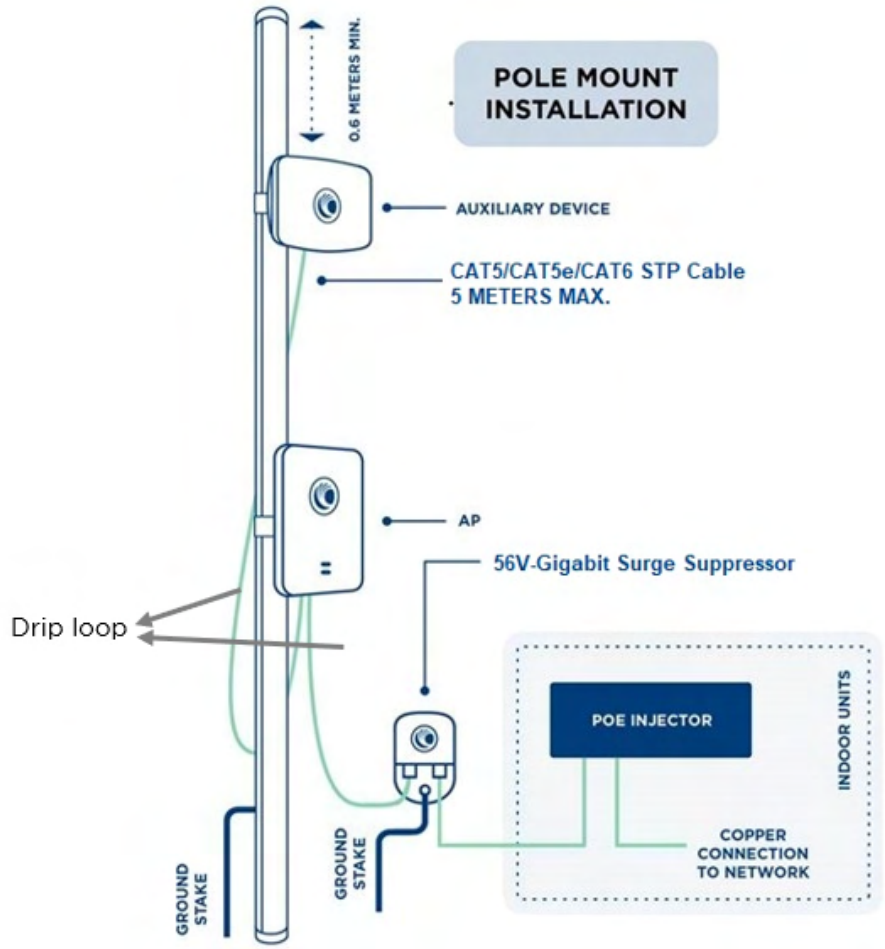

Wall mount guidelines

If you need to install AP on the wall of a building, then in addition to the general protection requirements, follow the below requirements also:

- Ensure that the position of the equipment is lower than the top of the building or its lightning air terminal.
- Ensure that the building is correctly grounded.

Connection examples of wall installations are shown in below figure.

Figure 2 *Grounding and lightning protection on wall*

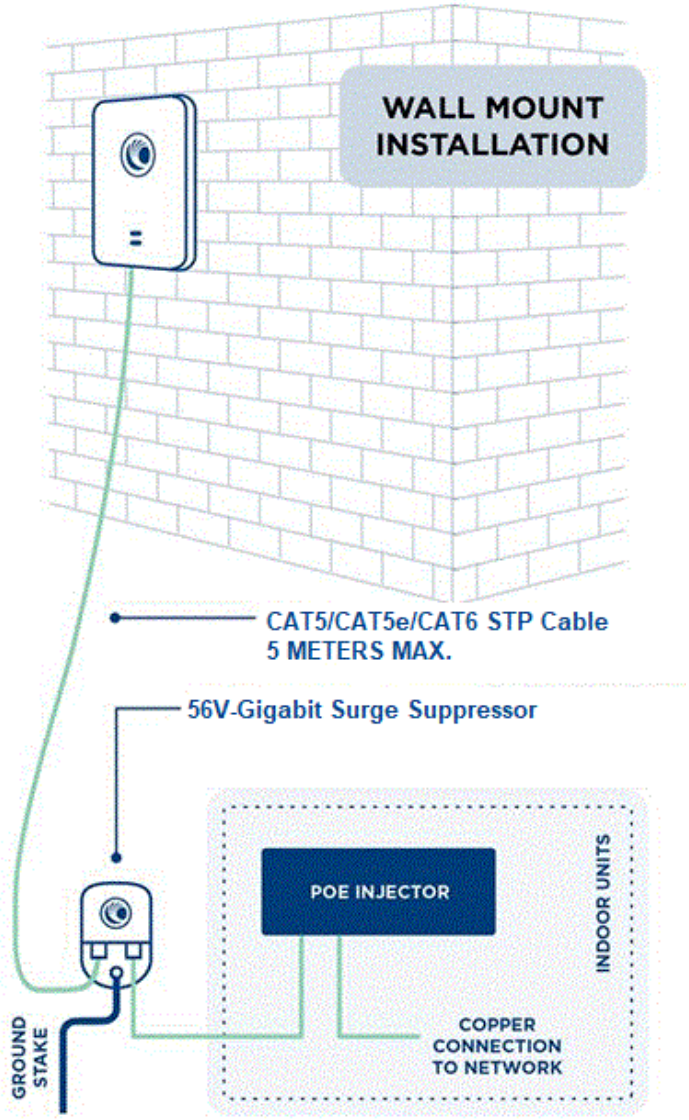

Note

There should be a drip loop immediately at the Ethernet port entrance going to the AP.

Training

The installer needs to have basic competence in radio and IP network installation. The specific requirements applicable to the Cambium Networks Enterprise Wi-Fi 6 and 7 APs must be gained by reading this guide and by performing sample setups at base workshop before live installments.

Power density exposure limit

This section includes the following topics:

- Calculation of power density and distance
- Calculated distances and power compliance margins

Install the radios for the platform family of wireless solutions so as to provide and maintain the minimum separation distances from all persons.

The applicable FCC power density exposure limit for RF energy in the 2.4 and 5 GHz frequency bands is 1 mW/cm2.

The applicable ISEDC power density exposure limit for RF energy in unlicensed bands is 0.02619 * (f^ (0.6834)), where f is the lowest frequency of the supported band. For licensed bands, the power density exposure limit is 0.6455 * (f^ (0.5)), where f is the lowest frequency of the supported band.

Calculation of power density and distance

The following calculation is based on the ANSI IEEE C95.1-1991 method, as that it provides a worst-case analysis. Details of the assessment to EN50383:2002 can be provided, if required.

Peak power density in the far field of a radio frequency point source is calculated using the following formula:

$$S = \frac{P.G}{4\pi d^2}$$

Where:

- P—Maximum average transmit power capability of the radio in watt (W)
- G—Total transmit gain as a factor, converted from dB
- S—Power density in W/m^2
- d—Minimum safe separation distance from point source, in centimeters (cm)

Table 4 *Antenna details*

AP	Antenna	Gain (for 2.4 GHz in dBi)	Gain (for 5 GHz in dBi)	Gain (for 6 GHz in dBi)
XV3-8	Omnidirectional	5.1	6.7	N/A
XV2-2	Omnidirectional	5.4	6.3	N/A
XV2-2T0	Omnidirectional	5.3	9.0	N/A
XV2-2T1	Sector	11.9	14	N/A
XV2-22H	Omnidirectional	4.47	5.56	N/A
XV2-21X	Omnidirectional	5.05	7.75	N/A

AP	Antenna	Gain (for 2.4 GHz in dBi)	Gain (for 5 GHz in dBi)	Gain (for 6 GHz in dBi)
XV2-23T	Omnidirectional	7.34	11.43	N/A
XE3-4	Omnidirectional	4.85	5.6	6.3
XE3-4TN	External	17.23	16.55	13
XE5-8	Omnidirectional	5	5	4
X7-35X	Omnidirectional	3	6	6

For details on minimum safe distance value, see Table 5.

Calculated distances and power compliance margins

Table 5 displays power density and minimum safe separation distance from point source for each frequency band and antenna combination for the USA and Canada. These are conservative distances that include compliance margins.

Cambium Networks Enterprise Wi-Fi 6 and 7 APs adhere to all applicable EIRP limits for transmit power when operating in MIMO mode. Separation distances and compliance margins include compensation for both transmitters. The minimum safe separation distance from point source is calculated using the following formula:

$$d = \sqrt{\frac{P.G}{4\pi.S}}$$

Explanation of terms used in the following tables:

- P—Maximum average transmit power capability of the radio in watt (W)
- G—Total transmit gain as a factor, converted from dB
- S—Power density in W/m^2 (For FCC and IC) or mW/cm^2 (For CE)
- d—Minimum safe separation distance from point source, in centimeters (cm)

Table 5 *Power density and distance*

Product	Regulatory Domain	Power density (S)	Distance (d) in cm
XE5-8	FCC	0.055/0.056/0.008 mW/cm^2 (2.4 GHz/5 GHz/6 GHz)	75
	IC	0.203/0.207/0.038 mW/cm^2 (2.4 GHz/5 GHz/6 GHz)	39
	CE	0.116/3.348/0.234 W/m^2 (2.4 GHz/5 GHz/6 GHz)	26

Product	Regulatory Domain	Power density (S)	Distance (d) in cm
XV3-8	FCC	0.21/0.33 mW/cm^2 (2.4 GHz/5 GHz)	31
	IC	0.22/0.35 mW/cm^2 (2.4 GHz/5 GHz)	30
	CE	0.197/7.47 W/m^2 (2.4 GHz/5 GHz)	20
XV2-2	FCC	0.451/0.505 mW/cm^2 (2.4 GHz/5 GHz)	25
	IC	0.31/0.35 mW/cm^2 (2.4 GHz/5 GHz)	30
	CE	0.196/7.598 W/m^2 (2.4 GHz/5 GHz)	20
XV2-2T	FCC	0.36/0.597 mW/cm^2 (2.4 GHz/5 GHz)	23
	IC	0.26/0.433 mW/cm^2 (2.4 GHz/5 GHz)	27
	CE	0.1957/7.70 W/m^2 (2.4 GHz/5 GHz)	20
XV2-2T1	FCC	0.466/0.466 mW/cm^2 (2.4 GHz/5 GHz)	26
	IC	0.328/0.328 mW/cm^2 (2.4 GHz/5 GHz)	31
	CE	0.193/7.41 W/m^2 (2.4 GHz/5 GHz)	20
XE3-4	FCC	0.24/0.35/0.022 mW/cm^2 (2.4 GHz/5 GHz/6 GHz)	30
	IC	0.20/0.29 mW/cm^2 (2.4 GHz/5 GHz)	33
	CE	0.1247/4.548/0.253 W/m^2 (2.4 GHz/5 GHz/6 GHz)	25
XE3-4TN	FCC	0.08/0.08/0.01* mW/cm^2 (2.4 GHz/5 GHz/6 GHz*) **Note** * LPI deployment requires professional installation and must not include the Ethernet connector weather protection gland. • LPI is for indoor use only.	62
	IC	0.244/0.244 mW/cm^2 (2.4 GHz/5 GHz)	36
	CE	0.127/5.045 W/m^2 (2.4 GHz/5 GHz)	25
XV2-21X	FCC	0.122/0.122 mW/cm^2 (2.4 GHz/5 GHz)	51
	IC	0.329/0.329 mW/cm^2 (2.4 GHz/5 GHz)	31
	CE	0.190/7.88 W/m^2 (2.4 GHz/5 GHz)	20

Product	Regulatory Domain	Power density (S)	Distance (d) in cm
XV2-23T	FCC	0.122/0.122 mW/cm^2 (2.4 GHz/5 GHz)	51
	IC	0.329/0.329 mW/cm^2 (2.4 GHz/5 GHz)	31
	CE	0.891/7.687 W/m^2 (2.4 GHz/5 GHz)	20
XV2-22H	FCC	0.123/0.106 mW/cm^2 (2.4 GHz/5 GHz)	41
	IC	0.330/0.286 mW/cm^2 (2.4 GHz/5 GHz)	25
	CE	0.198/3.271 W/m^2 (2.4 GHz/5 GHz)	20
X7-35X	FCC	0.09/0.11/0.03 mW/cm^2 (2.4 GHz/5 GHz/6 GHz)	41
	IC	2.50/3.30/0.75 W/m^2 (2.4 GHz/5 GHz/6 GHz)	24
	CE	0.19/2.74/0.39 W/m^2 (2.4 GHz/5 GHz/6 GHz)	20

Best practice for outdoor installation

Since Outdoor Wi-Fi is very dynamic, constant monitoring and remedial action is required to provide Wi-Fi outdoors successfully. Deployment of an outdoor wireless network requires an even greater specialized skill set due to the unique volatile nature of the outdoor environment.

Some of the issues with the outdoor Wi-Fi are,

- Wireless interference
- Building structure
- Changes in the physical environment
- Climate conditions

Some of the critical points to be taken care of while designing outdoor Wi-Fi are planning and design of the Wi-Fi.

Outdoor Wi-Fi can support multiple topologies which are listed below:

- Point-to-Point
- Point-to-Multipoint
- Wireless Mesh solutions

The initial challenge while planning outdoor Wi-Fi is to determine the appropriate topology for the solution. A point-to-point topology is ideal for a building-to-building solution. Similarly, to connect a building with multiple buildings (hub-and-spoke) a point-to-multipoint topology is ideal.

Cambium Networks outdoor APs

Cambium Networks provides a wide range of wireless APs that can be deployed outdoors.

Wi-Fi 6/6E outdoor APs

- XV2-2T: To cover large areas, Dual radio, two Ethernet ports, and 1 GbE with the power out
  - XV2-2T0 (Omni Antenna)
  - XV2-2T1 (120° Sector Antenna)
- XV2-23T: Ideal for hospitality, educational, Dual radio
- XE3-4TN: With N-type antenna connectors, Tri radio, 5 Ghz 4x4

802.11ac wave 2 internal antenna outdoor APs

- e505 and e510: Dual radio, single port AP, ideal for hospitality and warehouse
- e700: Dual radio, 5Ghz 4x4, Two eth port, 1 port with Cambium 30V or 48V PoE Out

Recommended outdoor Wi-Fi deployments by Cambium Networks

- Mounting and installation of APs

  Wi-Fi 6/6E and 802.11ac wave 2 APs support both wall and pole mount installation. To follow best practices for clear signal propagation, care should be taken in each of these installations.

  - If the AP is mounted on a metal pole, ensure that the pole does not cover the entire back face of the AP. The metal would block the signal penetration towards the back, providing lower signal quality and throughput.
  - The AP's maximum height from the ground should ideally not exceed 10 meters (close to 35 feet) for the wireless clients to associate.
  - In a mesh deployment, APs should be installed at nearly the same height. Avoid installing an AP where its peer is 90 degrees from it (on its edge), the preference is for the APs to face each other as much as possible from the front or the back.
  - To avoid disorientation because of strong wind gusts, ensure that the AP is firmly mounted on the pole.
  - If the AP is mounted on a wall, ensure there is sufficient clearance (1 foot or more) from the wall, to avoid the adverse effect of signal reflections from the wall.
  - Try to avoid installing APs near trees or just in front of trees because the signal fades due to the foliage or leaves in the signal path.
  - Avoid installing APs near reflecting surfaces such as metal and glass.
- Protection from lightning and surges

- Cambium Networks recommend proper grounding for all outdoor installations
- Use Cambium Networks 1000 SS for surge protection (model#: C000000L033B)

Figure 3 *Lightning protection installation*

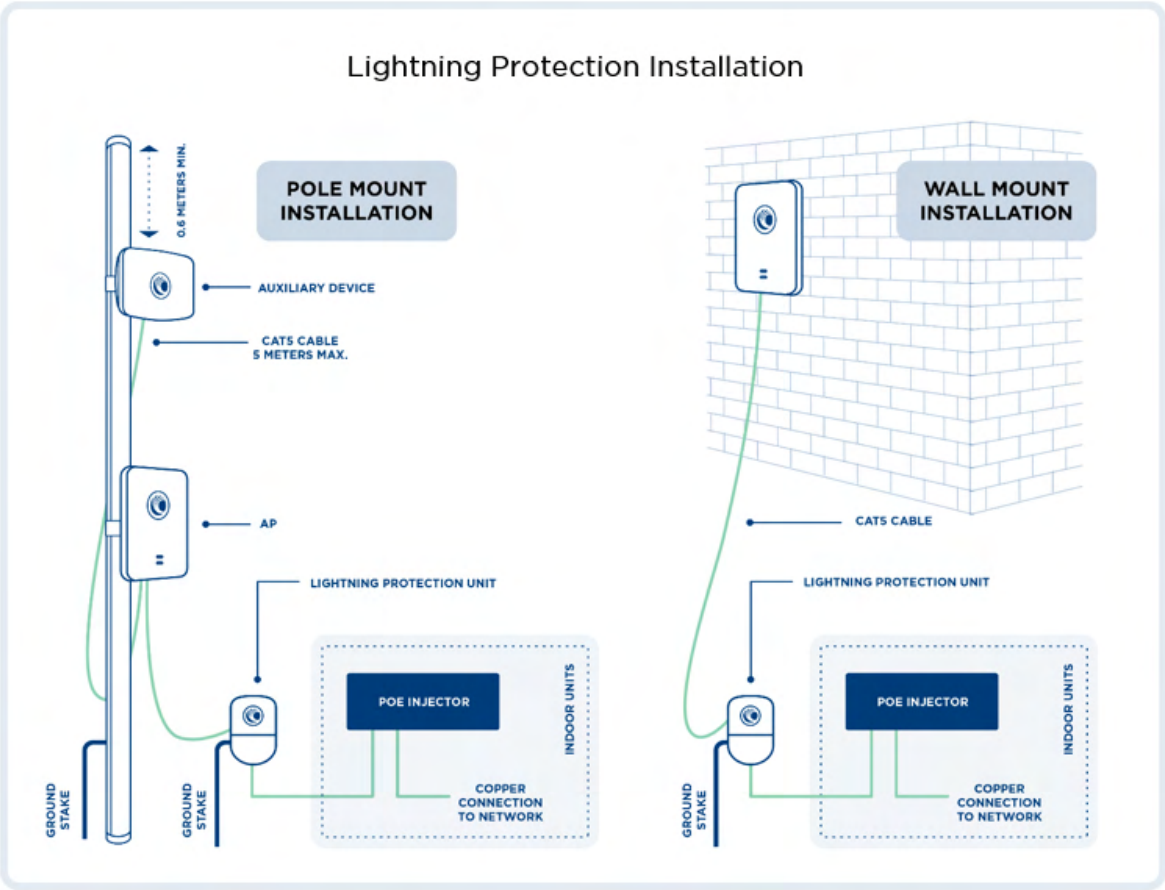

- Tilt Suggestion while XV2-2T1 AP is mounted on a pole
  - For tilting, if the XV2-2T1 AP is mounted at about 10 m, we recommend total down-tilt (or possibly up-tilt). The below table lists tilt suggestions for XV2-2T1 APs that are derived from standard calculations:

Table 6 *Tilt suggestion for XV2-2T1*

Distance between AP and client	*2.4G recommended mechanical tilt	Expected inner and outer radius coverage	*5G recommended mechanical tilt	Expected inner and outer radius coverage
100 m	2-4 deg down	35 m / 133 m	3-3.5 deg down	56 m / 451 m
200 m	1-2 deg down	44 m / 80 m	0.5 deg down	78 m / 362 m

Distance between AP and client	*2.4G recommended mechanical tilt	Expected inner and outer radius coverage	*5G recommended mechanical tilt	Expected inner and outer radius coverage
300 m	0 to +1 deg up	46 m / 70 m	0 deg	90 m / 226 m
400 m	+1 deg up	50 m / 66 m	0 to +1 deg up	97 m / 190 m
500 m	+1 to 2 deg up	51 m / 64 m	+1 deg up	93 m / 148 mm

* Assume 10 m AP mounting height

* Assume client devices near the ground (1 m or nearer)

* The AP has about 2 deg of electrical down tilt

For understanding and help with outdoor deployments, see the following pages:

- https://www.allaboutcircuits.com/tools/antenna-downtilt-and-coverage-calculator/
- https://www.allaboutcircuits.com/tools/eirp-calculator/

- When multiple APs are mounted on the same pole
  - When mounting multiple sector APs back-to-back on a single pole they should ideally be separated by about 2-3 feet from each other. If vertical separation is also possible, that is helpful too (refer to pic). Separate the three APs in vertical space so the radome sections do not overlap (so need about 5 feet of total vertical pole space).

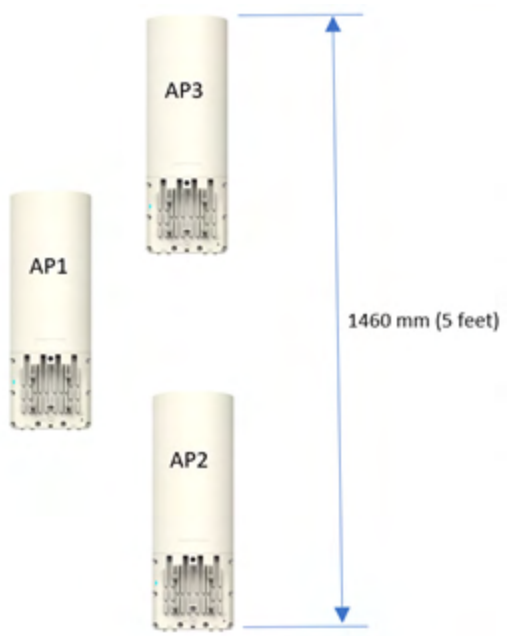

- These APs must be separated at the frequency level also, that is, APs need to be configured to operate in two different non-overlapping channels.
- Add a metal plate on the backside of the AP antenna section as shown below:

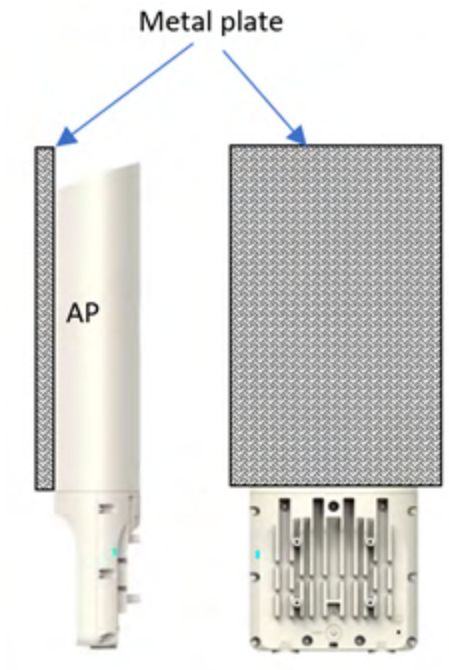

- If the same pole is used to install all vendor devices, please make sure that there is proper vertical spacing between all devices.

Attention

Be careful about the metal backplate added backside for improved front-to-back isolation, which may cause some distortion of the main antenna pattern.

- Not suggested deployment models

- Deployment on coconut trees

There is no signal coverage on the XV2-2T0 AP backside since the coconut tree stem covers the backside of the XV2-2T0 AP.

- Real-time pictures from the field on an electric pole.

- Suggested mount accessories for better wall mount deployment

- Wall mount accessories

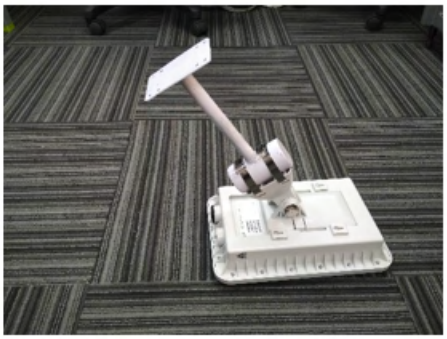

- Wind resistance
  - e505—Up to 224 km/h
  - e510—Wind survival: Up to 224 km/h
  - e700—Up to 224 km/h
  - XV2-2T0/T1—Wind survival: Up to 224 km/h
  - XV2-23T—Wind survival: Up to 200 km/h
  - XE3-4TN—Up to 224 km/h

Packaging and Installation of Access Point

This chapter describes the following topics:

- Unpacking the Access Point
- Package contents
- Mounting the device
- Unlocking the Enterprise Wi-Fi 7 AP bracket

Unpacking the Access Point

After you purchase a Cambium Networks Enterprise Wi-Fi AP, unpack the AP and check the package contents.

1. Open the AP package, and then carefully remove the contents.
2. Verify that all items listed in Package contents below are included in the package. Check each item for damage. If any item is damaged or missing, notify your authorized Cambium Networks Enterprise Wi-Fi AP sales representative.

Package contents

A complete Cambium Networks Enterprise Wi-Fi AP package contains all the items listed below:

1. Cambium Networks Enterprise Wi-Fi AP
2. Quick Start Guide (QSG)
    - Specifications
    - Safety Notice
    - Compliance
3. Hardware Accessories (Based on SKU/Model)
    - Mounting Kits

Mounting the device

This section includes the following topics:

Enterprise Wi-Fi APs feature an attractive design with flexible mounting options that allows the APs to smoothly blend into any business environment. Enterprise Wi-Fi APs are mounted in the following methods:

- Wall Mount
- Celling Mount
- T-bar Mount

- Pole Mount
- Gang mount
- Table mount
- Junction box mount
- General wall mount

Table 7 provides an overview of the type of mountings each Enterprise Wi-Fi APs support.

Table 7 *Types of mounting the device*

Access Point	Wall Mount	Ceiling Mount	T-bar Mount	Pole Mount	Table Mount	Junction Box Mount
XV3-8	✓	✓	✓			
XV2-2	✓	✓	✓			
XV2-2T0	✓			✓		
XV2-2T1	✓			✓		
XV2-22H	✓				✓	✓
XV2-21X	✓	✓	✓			✓
XV2-23T	✓			✓		
XE3-4	✓	✓	✓			
XE3-4TN	✓			✓		
XE5-8	✓	✓	✓			
X7-35X	✓	✓	✓			✓

This section describes the following topics:

- Mounting XV3-8
- Mounting XE5-8
- Mounting XV2-2
- Mounting XV2-2T0/XV2-2T1
- Mounting XE3-4
- Mounting XE3-4TN

- Mounting XV2-21X
- Mounting XV2-23T
- Mounting XV2-22H
- Mounting X7-35X

Mounting XV3-8

The XV3-8 APs are mounted by using one of the following mounting techniques:

- Ceiling mount
- Wall mounting
- T-bar mounting

Ceiling mount

To mount the XV3-8 unit on the ceiling, perform the following steps:

1. Determine where XV3-8 needs to be mounted and remove the ceiling tile.
2. Using the hole template, mark the hole locations.
3. Drill the holes for the four mounting screws using a 5 mm (3/6”) diameter drill bit.
4. Drill a hole for the RJ45 cable using a 15 mm (5/8”) diameter bit.
5. Hold the mounting plate on the top side of the ceiling tile and screw it on the mounting bracket.
6. Run the RJ45 cable(s) through the 15 mm hole and remount the ceiling tile.
7. Attach the RJ45 cable(s) to the XV3-8 unit.
8. Slide the XV3-8 unit into the mounting bracket.

Figure 4 *XV3-8 - Ceiling mount*

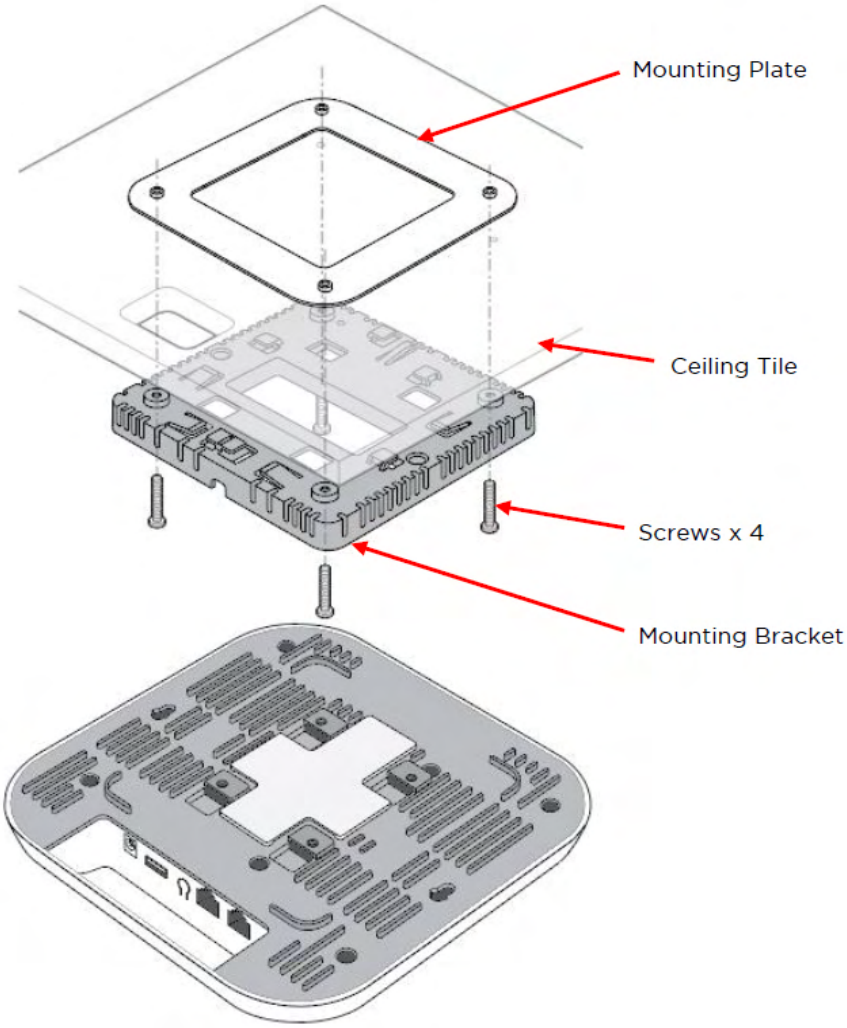

Wall mounting

You can mount XV3-8 unit to any wall by using two screws with corresponding wall anchors. The ceiling mount bracket can be used as a template to align the screws with the unit.

Figure 5 *XV3-8 - Wall mount*

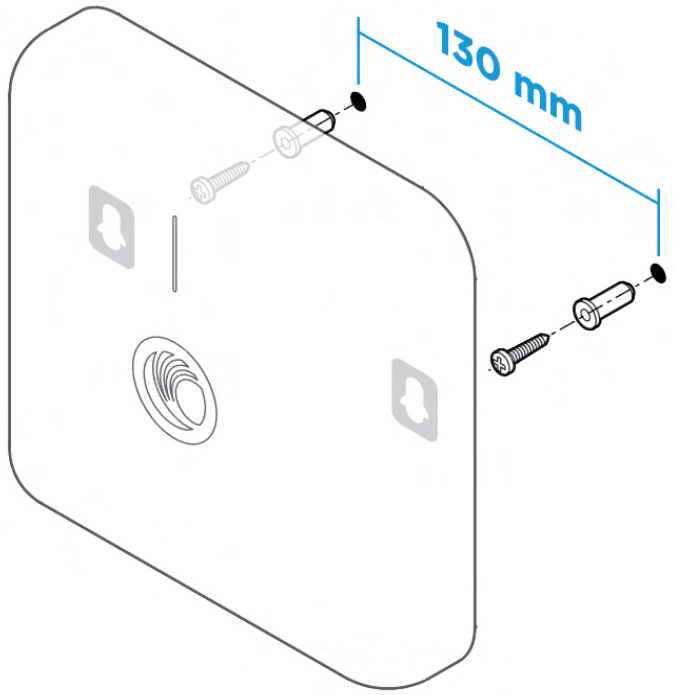

T-bar mounting

38 mm T-Bar

The XV3-8 can be secured to a 38 mm ceiling T-bar rail by using the ceiling mount bracket. The **A** marking on the bracket must be used for this width T-bar rail.

Figure 6 *XV3-8 - 38 mm T-bar mount*

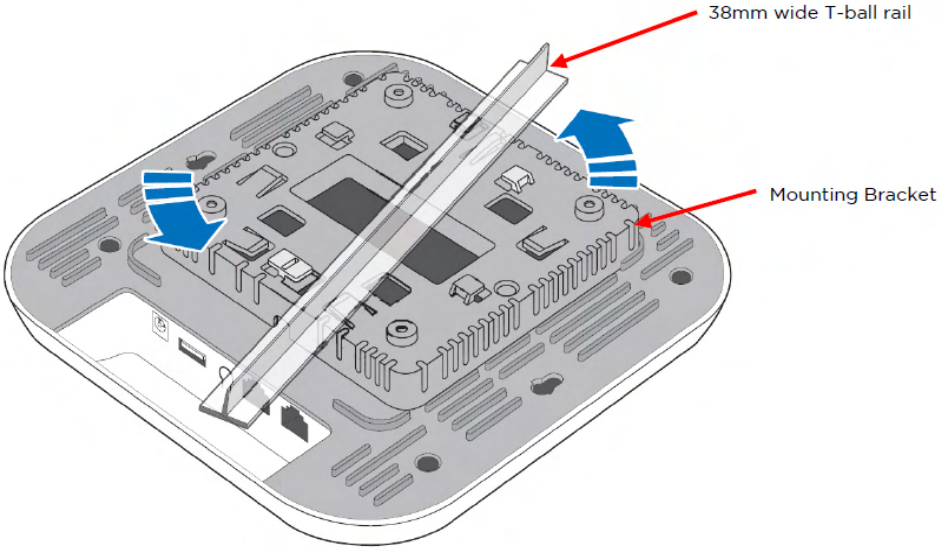

24 mm T-Bar

The XV3-8 unit can be mounted to a 24 mm width T-bar rail using the clips built into the underside of the unit. The **B** marking on the bracket must be used for this width T-bar rail.

Figure 7 *XV3-8 - 24 mm T-bar mount*

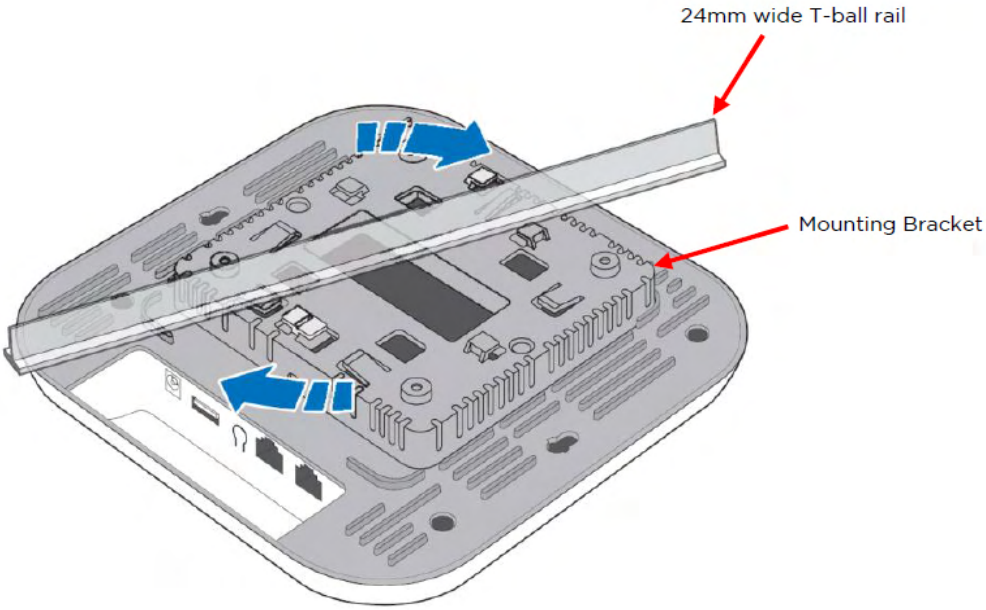

14 mm T-Bar

The XV3-8 unit can be mounted to a 14 mm width T-bar rail using the clips built into the underside of the unit. The **C** marking on the bracket must be used for this width T-bar rail.

Figure 8 *XV3-8 - 14 mm T-bar mount*

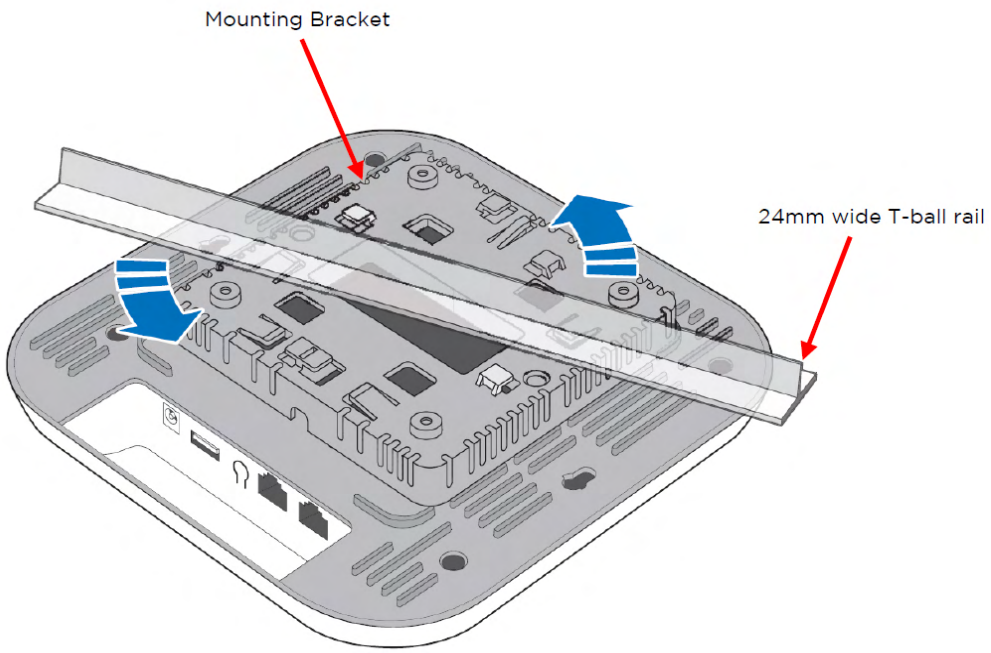

Mounting XE5-8

The XE5-8 APs are mounted by using one of the following mounting techniques:

- Ceiling mount
- Wall mounting
- T-bar mounting

Ceiling mount

To mount the XE5-8 unit on the ceiling, perform the following steps:

1. Determine where XE5-8 needs to be mounted and remove the ceiling tile.
2. Using the hole template, mark the hole locations.
3. Drill the holes for the four mounting screws using a 5 mm (3/6”) diameter drill bit.
4. Drill a hole for the RJ45 cable using a 15 mm (5/8”) diameter bit.
5. Hold the mounting plate on the top side of the ceiling tile and screw it on the mounting bracket.
6. Run the RJ45 cable (s) through the 15 mm hole and remount the ceiling tile.

7. Attach the RJ45 cable (s) to the XE5-8 unit.
8. Slide the XE5-8 unit into the mounting bracket.

Figure 9 *XE5-8 - Ceiling mount*

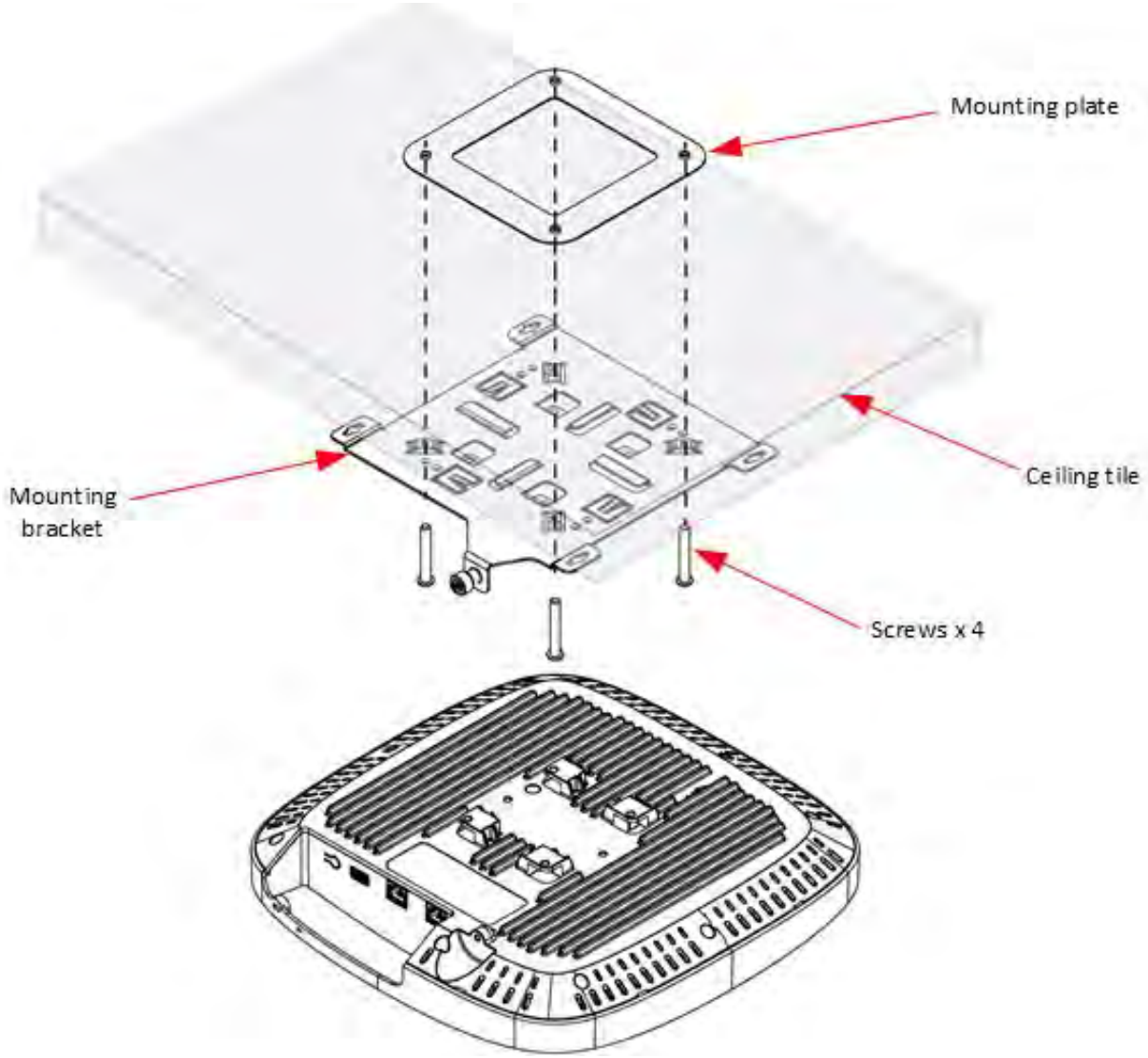

Wall mounting

You can mount XE5-8 unit to any wall by using two screws with corresponding wall anchors. The ceiling mount bracket can be used as a template to align the screws with the unit.

Figure 10 *XE5-8 - Wall mount*

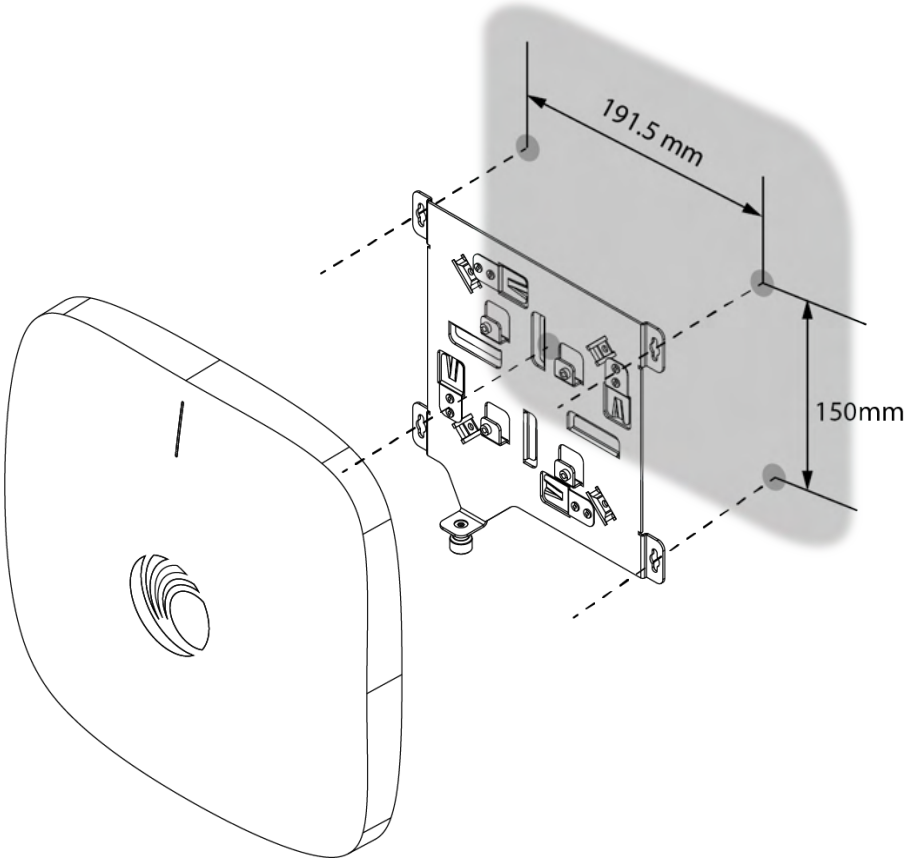

T-bar mounting

The XE5-8 can be secured to a 38 mm ceiling T-bar rail by using the ceiling mount bracket. The **A** marking on the bracket must be used for this width T-bar rail.

38 mm T-Bar

Figure 11 *XE5-8 - 38 mm T-Bar mount*

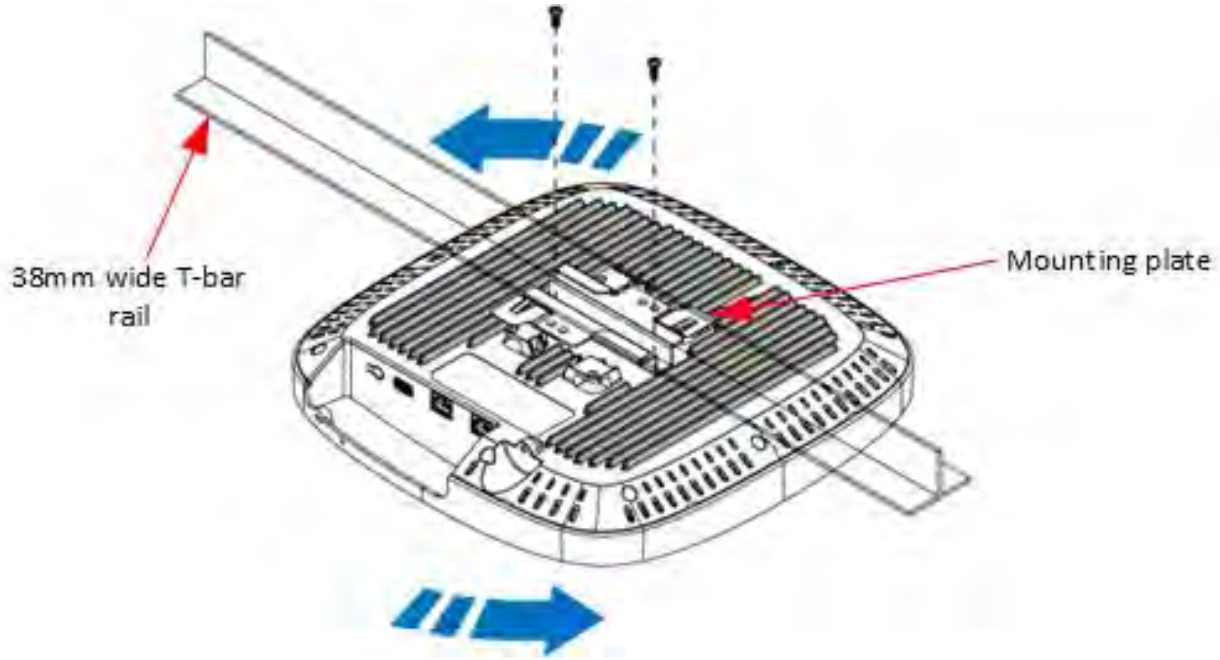

24 mm T-Bar

The XE5-8 unit can be mounted to a 24 mm width T-bar rail using the clips built into the underside of the unit. The **B** marking on the bracket must be used for this width T-bar rail.

Figure 12 *XE5-8 - 24 mm T-Bar mount*

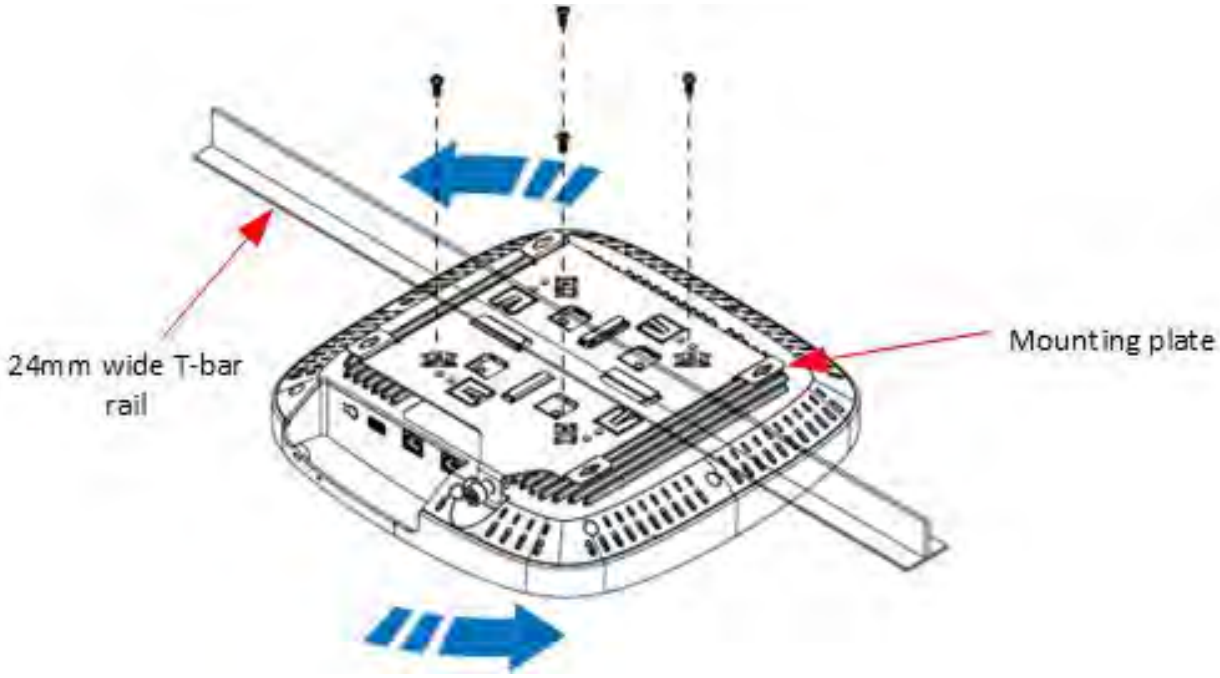

14 mm T-Bar

The XE5-8 unit can be mounted to a 14 mm width T-bar rail using the clips built into the underside of the unit. The **C** marking on the bracket must be used for this width T-bar rail.

Figure 13 *XE5-8 - 14 mm T-Bar mount*

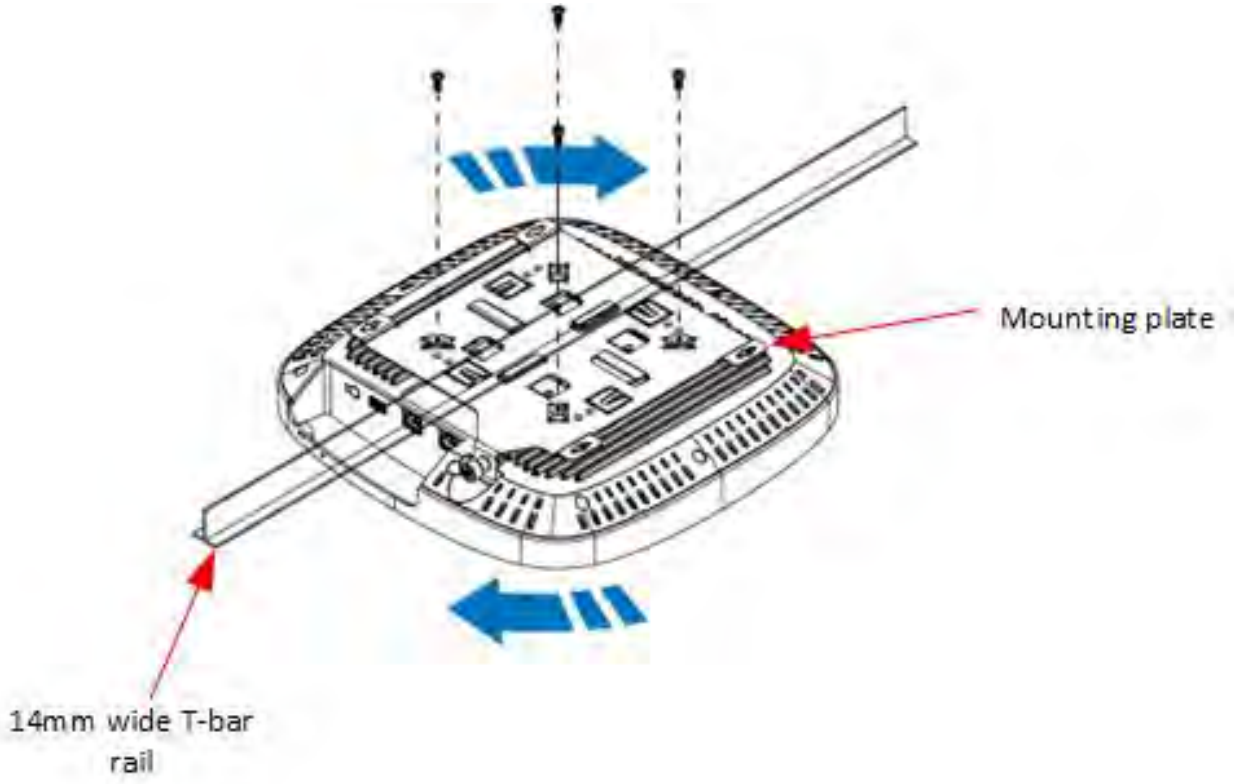

Mounting XV2-2

The XV2-2 APs are mounted by using one of the following mounting techniques:

- Ceiling mount
- Wall mounting
- T-bar mounting

Ceiling mount

Figure 14 *XV2-2 - Ceiling mount*

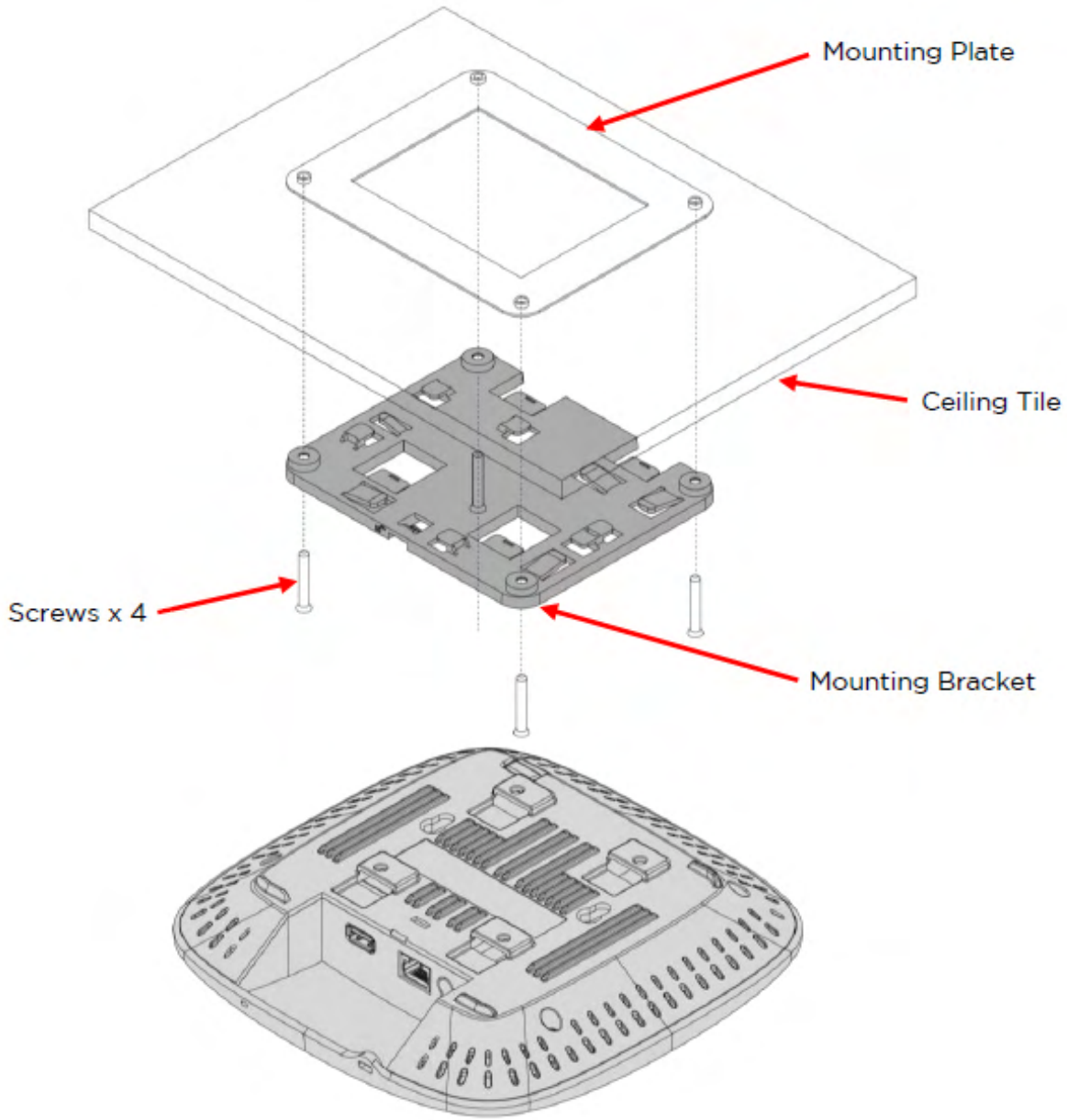

1. Determine where XV2-2 needs to be mounted and remove the ceiling tile.
2. Using the hole template, mark the hole locations.
3. Drill the holes for the 4 mounting screws using a 5 mm (3/6”) diameter drill bit.
4. Drill the RJ45 cable hole using a 15 mm (5/8”) diameter bit.
5. Hold the mounting plate on the top side of the ceiling tile and screw it on the mounting bracket.

6. Run the RJ45 cable (s) through the 15 mm hole and remount the ceiling tile.
7. Attach the RJ45 cable (s) to XV2-2 unit .
8. Slide XV2-2 into the mounting bracket.

Wall mounting

You can mount XV2-2 unit to any wall by using two screws with corresponding wall anchors. The ceiling mount bracket can be used as a template to align the screws with the unit.

Figure 15 *XV2-2 - Wall mount*

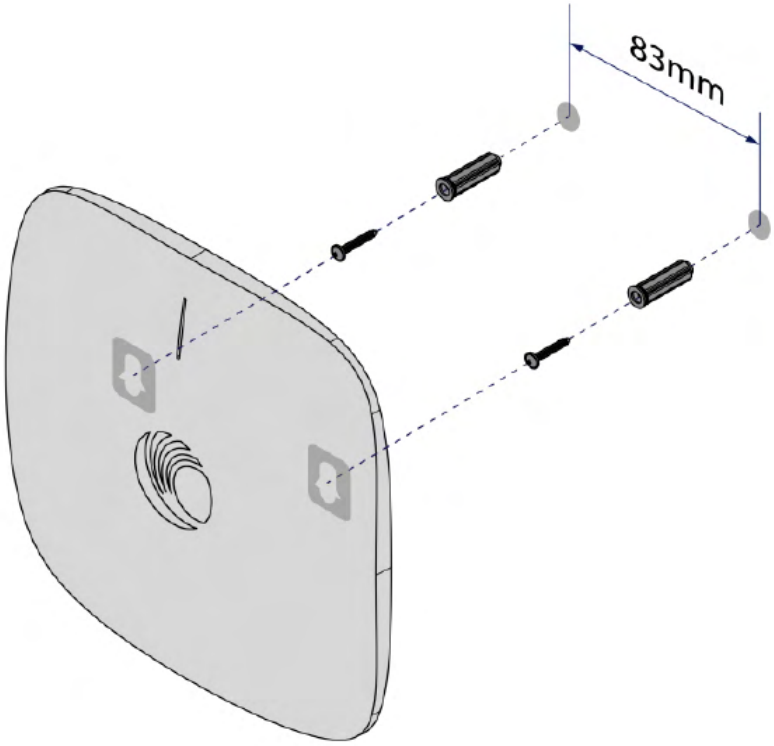

T-bar mounting

The XV2-2 unit can be secured to a 38 mm ceiling T-bar rail by using the ceiling mount bracket. The **A** marking on the bracket must be used for this width T-bar rail.

38 mm T-Bar

Figure 16 *XV2-2 - 38 mm T-Bar mount*

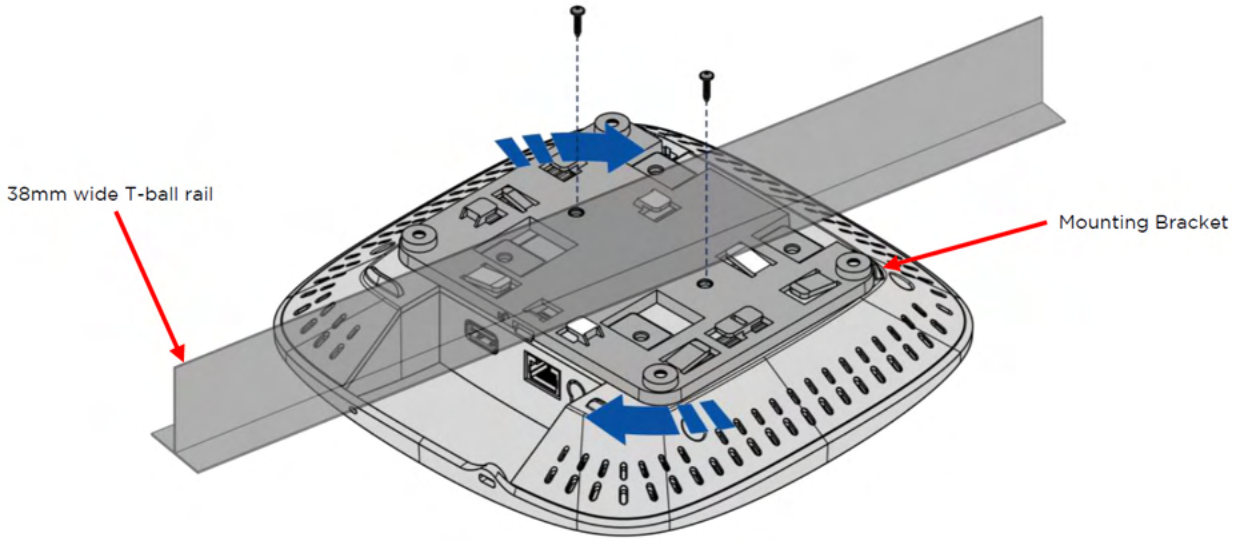

24 mm T-Bar

The XV2-2 unit can be mounted to a 24 mm width T-bar rail using the clips built into the underside of the unit. The **B** marking on the bracket must be used for this width T-bar rail.

Figure 17 *XV2-2 - 24 mm T-Bar mount*

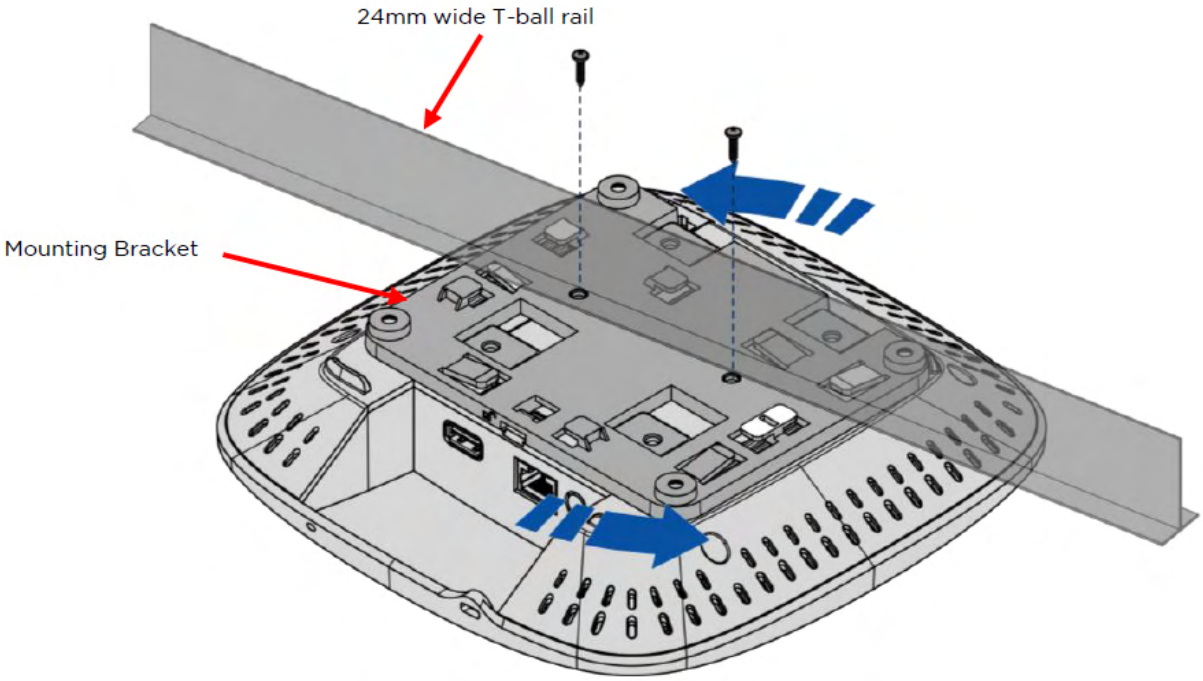

14 mm T-Bar

The XV2-2 unit can be mounted to a 14 mm width T-bar rail using the clips built into the underside of the unit. The **C** marking on the bracket must be used for this width T-bar rail.

Figure 18 *XV2-2 - 14 mm T-Bar mount*

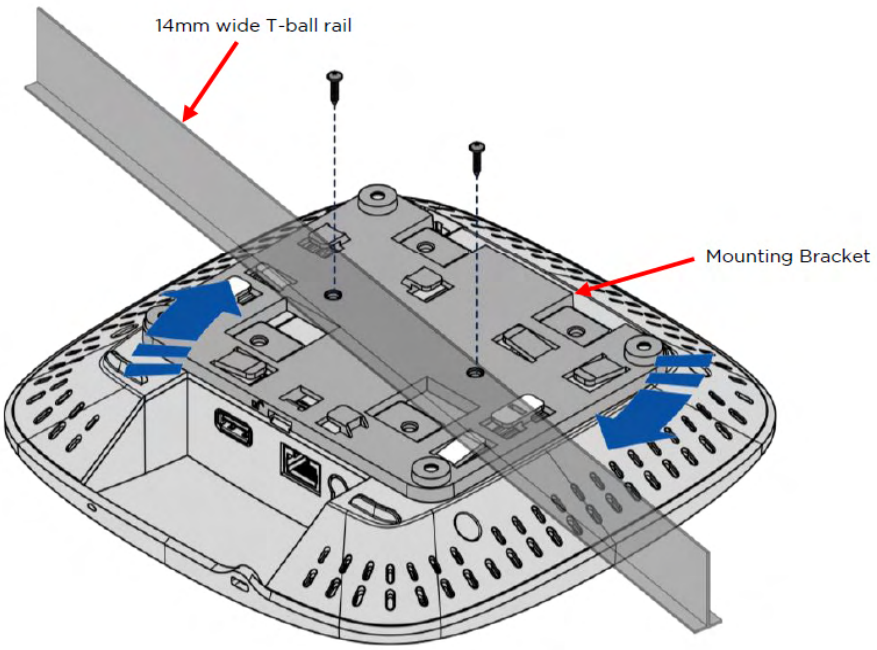

Mounting XV2-2T0/XV2-2T1

The XV2-2T0/XV2-2T1 APs are mounted by using one of the following mounting techniques:

- Wall mounting
- Pole mount with level bracket
- Pole mount with tilt bracket (Only for XV2-2T1)

Wall mounting

The XV2-2T0/XV2-2T1 units can be mounted to any wall by using two screws with corresponding wall anchors. To mount the XV2-2T0/XV2-2T1 unit on the wall, perform the following steps:

1. Drill two holes of each Ø6 mm (Ø0.25” Inch) on the wall where you want to mount the XV2-2T0/XV2-2T1 AP.

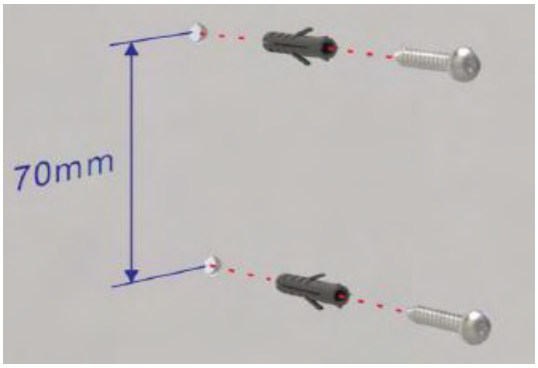

2. Press fit the plastic anchor and assemble fastener.
3. Leave 5 mm to 6 mm gap between the wall and the fastener head, as shown in below figure.

4. Use the four mounting slots given on the back of the radio to mount it on the wall.
5. Make sure that four screws are attached to the back side of the XV2-2T0/XV2-2T1 unit. Do not tighten the screws, completely.

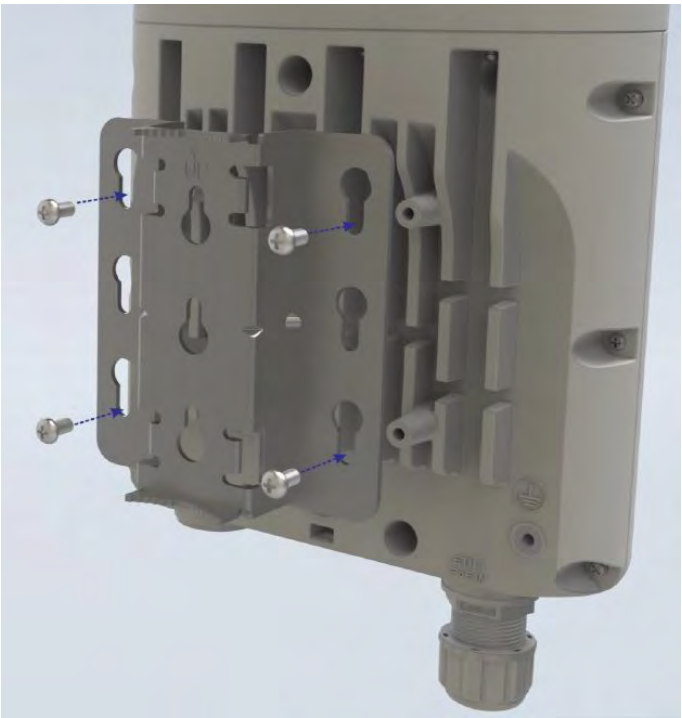

6. Hang the XV2-2T0 unit to the wall mount bracket and tighten the four screws as shown in below figure.

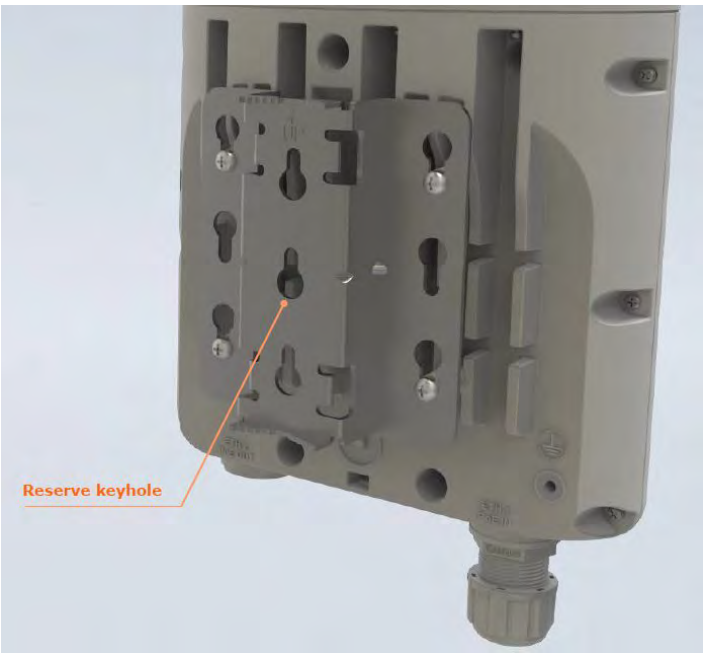

Pole mount with level bracket

To mount the XV2-2T0/XV2-2T1 unit on the pole, perform the following steps:

1. Insert the hose mounting clamp though the pole mounting level bracket.

2. Fix the clamp to the pole by applying 9.0 Nm torque.

3. Fasten four mounting screws.

4. Align the chassis with the guide hole of the pole mounting level bracket and

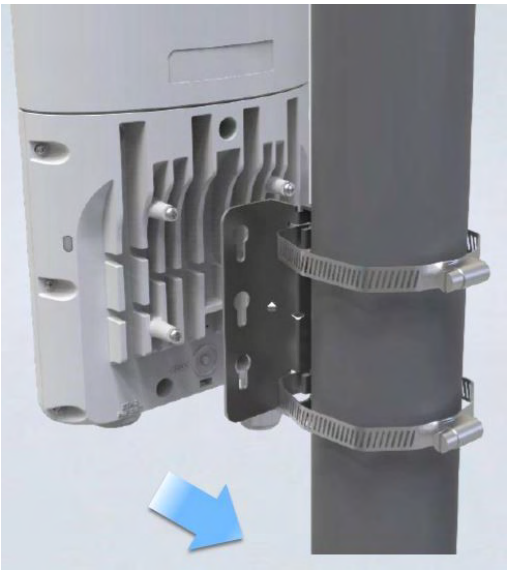

5. Slide it downwards.

6.

Pole mount with tilt bracket (Only for XV2-2T1)

To mount the XV2-2T1 unit on the pole, perform the following steps:

1. Assemble the pole mount holder to XV2-2T1 by using the four M5 screws, as shown below.

2. Install the pole mount bracket to the pole by using two hose clamps with 9 Nm torque.

3. Assemble XV2-2T1 (with pole mount holder) to pole mount bracket. Use M12 stud, washer, and M12 nut to secure it by applying 3Nm torque, as shown below.

Mounting XE3-4

The XE3-4 APs are mounted by using one of the following mounting techniques:

- Ceiling mount
- Wall mounting
- T-bar mounting

Ceiling mount

Figure 19 *XE3-4 - Ceiling mount*

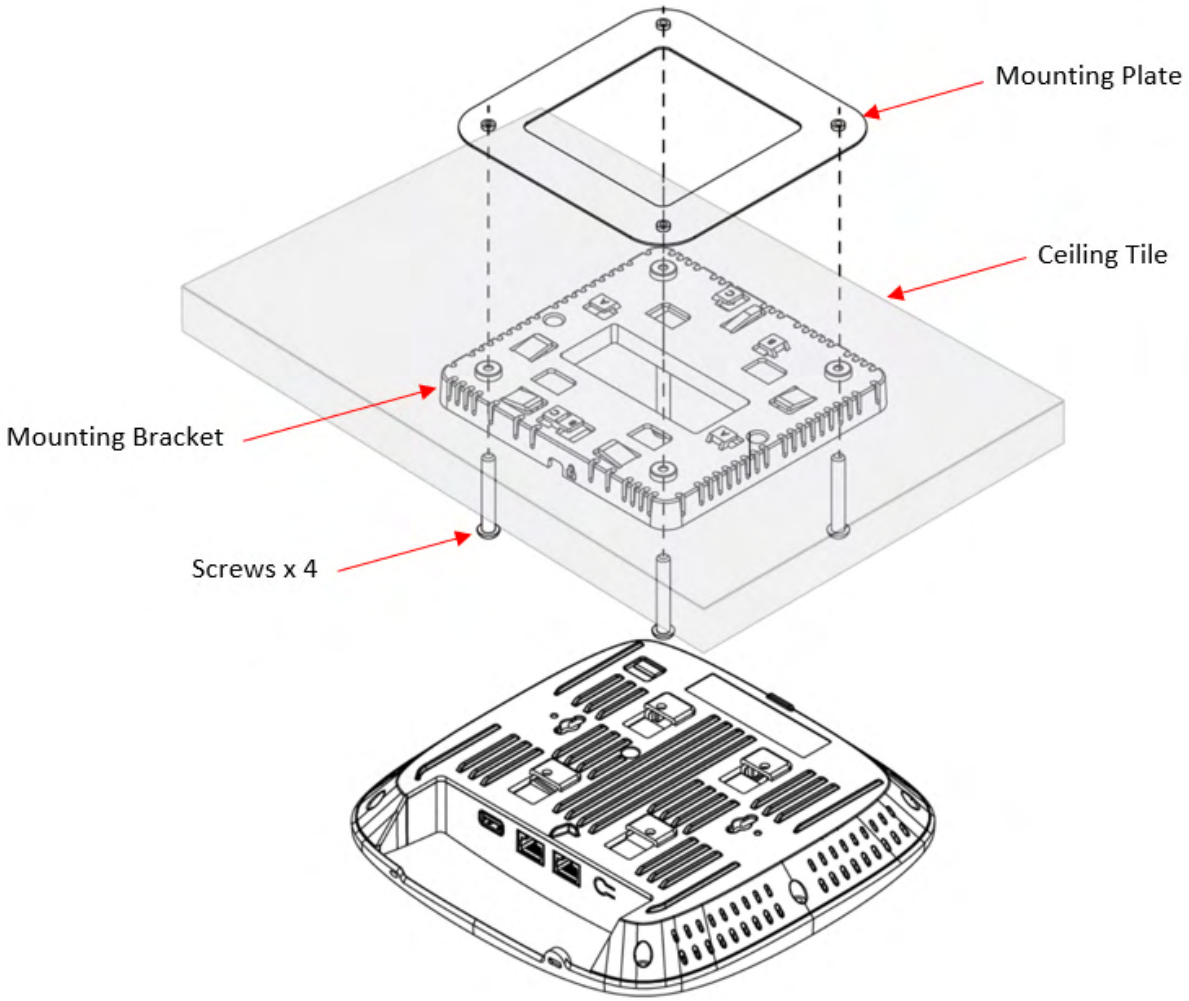

To mount the XE3-4 unit by using the ceiling mount technique, perform the following steps:

1. Determine a place or location where you want to mount the XE3-4 unit.
2. Remove the ceiling tile.
3. Using the hole template, mark the hole locations.
4. Drill the holes for the four mounting screws using a 5 mm (3/6”) diameter drill bit.
5. Drill the RJ45 cable hole using a 15 mm (5/8”) diameter bit.
6. Hold the mounting plate on the top side of the ceiling tile and screw it on the mounting bracket.
7. Run the RJ45 cable (s) through the 15 mm hole and remount the ceiling tile.

8. Attach the RJ45 cable (s) to XE3-4 unit.
9. Slide XE3-4 unit into the mounting bracket.

Wall mounting

You can mount XE3-4 to any wall by using two screws with corresponding wall anchors. The ceiling mount bracket can be used as a template to align the screws with the unit.

Figure 20 *XE3-4 - Wall mount*

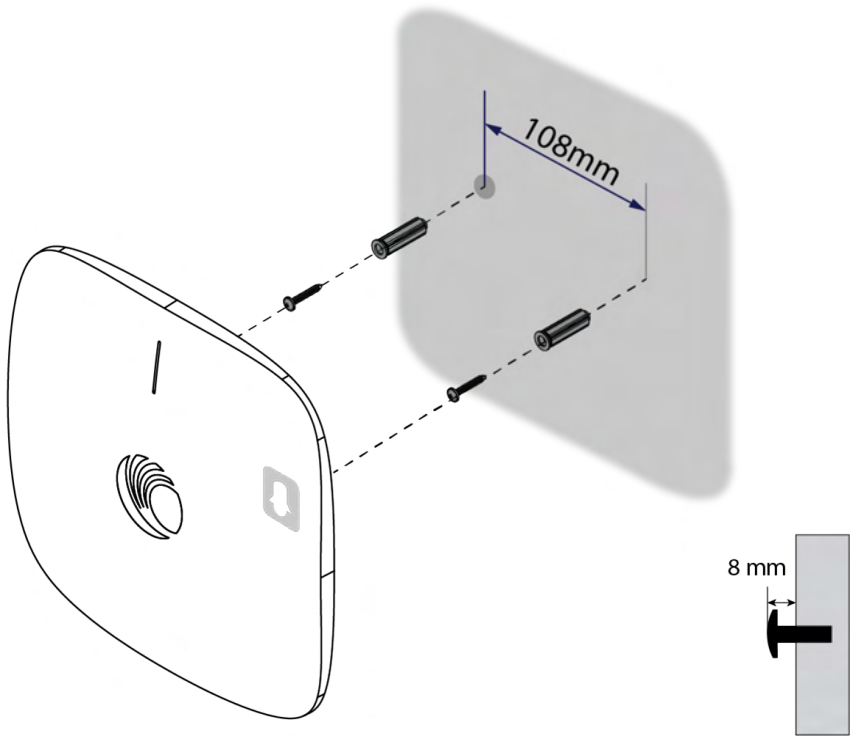

T-bar mounting

38 mm T-Bar

The XE3-4 unit can be secured to a 38 mm ceiling T-bar rail by using the ceiling mount bracket. The **A** marking on the bracket must be used for this width T-bar rail.

Figure 21 *XE3-4 - 38 mm T-Bar mount*

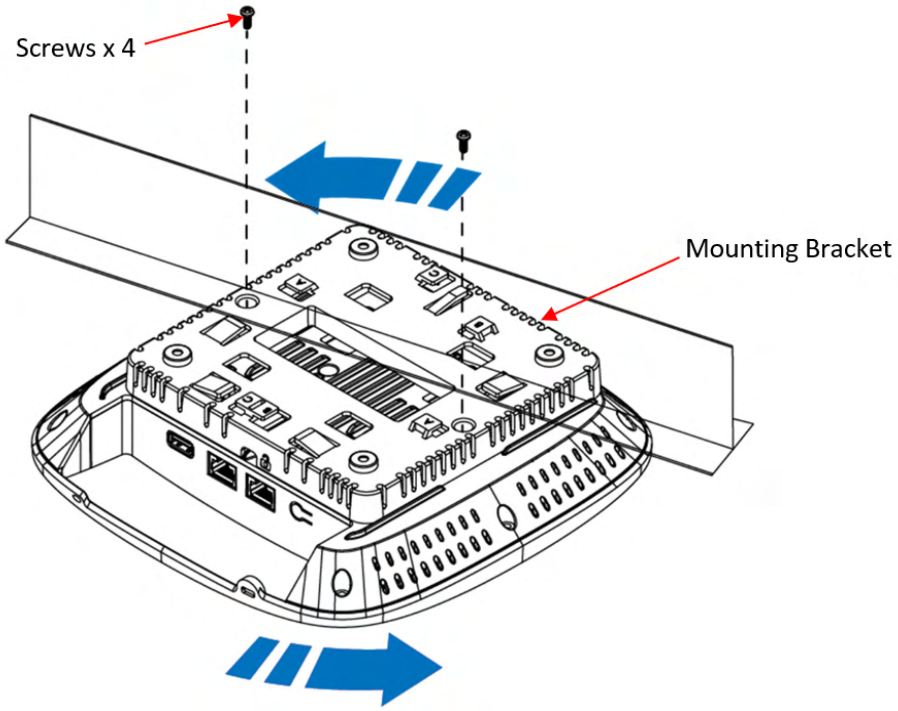

24 mm T-Bar

The XE3-4 unit can be mounted to a 24 mm width T-bar rail using the clips built into the underside of the unit. The **B** marking on the bracket must be used for this width T-bar rail.

Figure 22 *XE3-4 - 24 mm T-Bar mount*

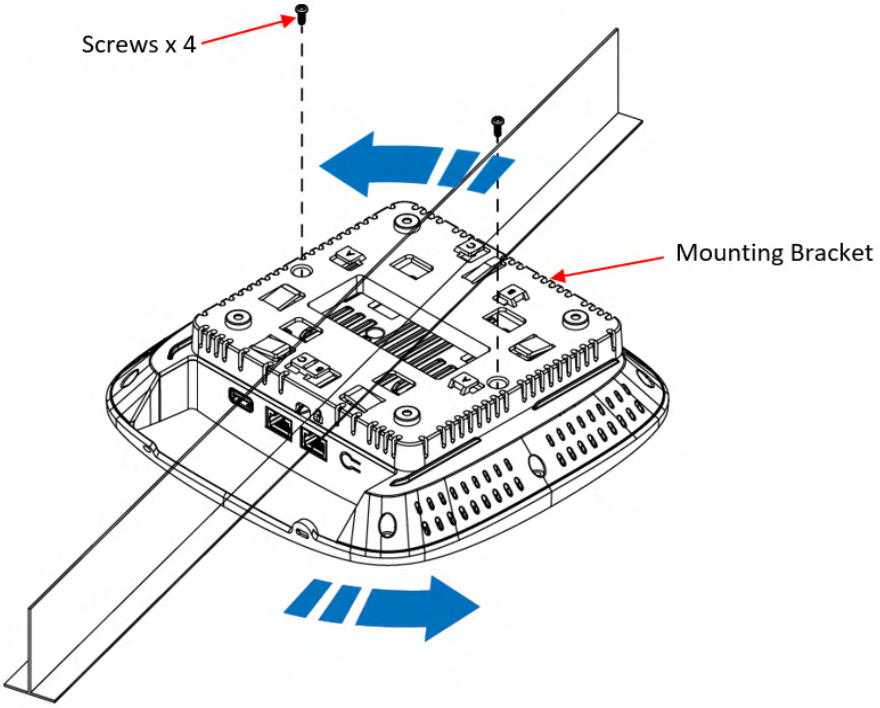

14 mm T-Bar

The XE3-4 unit can be mounted to a 14 mm width T-bar rail using the clips built into the underside of the unit. The **C** marking on the bracket must be used for this width T-bar rail.

Figure 23 *XE3-4 - 14 mm T-Bar mount*

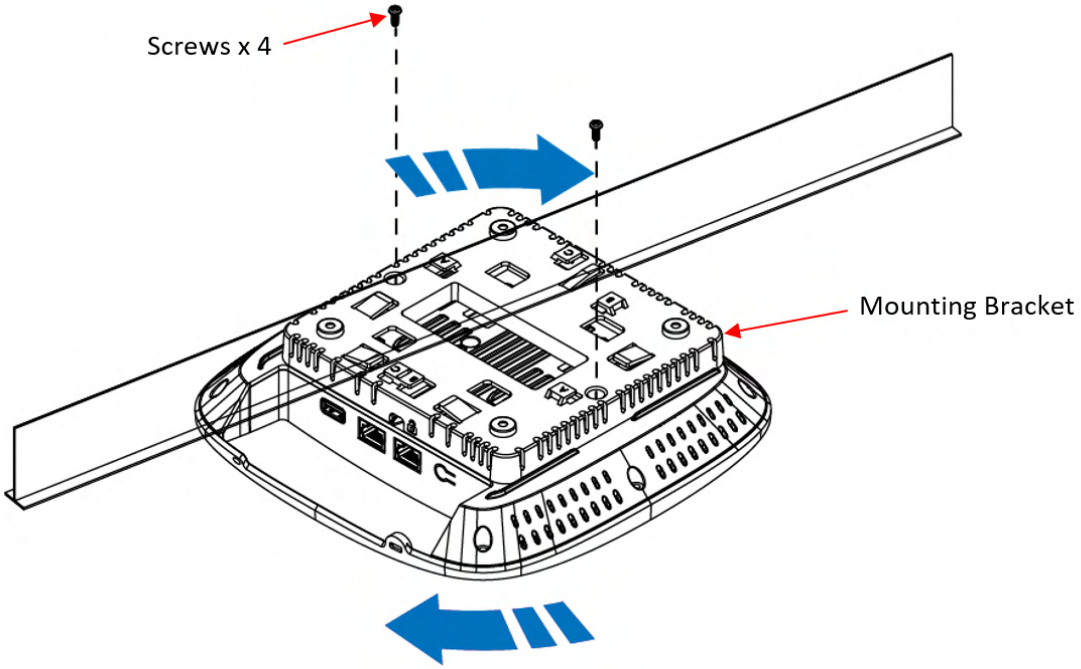

Mounting XE3-4TN

The XE3-4TN APs are mounted by using one of the following mounting techniques:

- Wall mounting with level bracket
- Pole mounting with level bracket

Wall mounting with level bracket

The XE3-4TN unit can be mounted to any wall by using two screws with corresponding wall anchors. To mount the XE3-4TN unit on the wall, perform the following steps:

1. Drill two holes of each Ø6 mm (Ø0.25” Inch) on the wall where you want to mount the XE3-4TN AP.

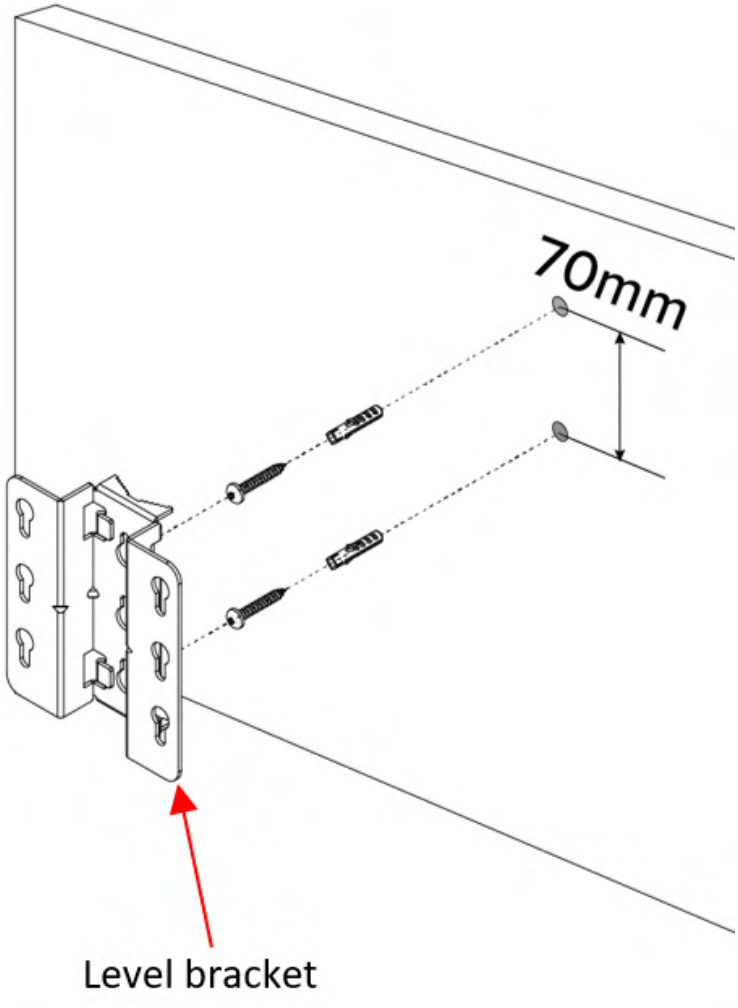

2. Remove the 4 screws from the back side of the AP.

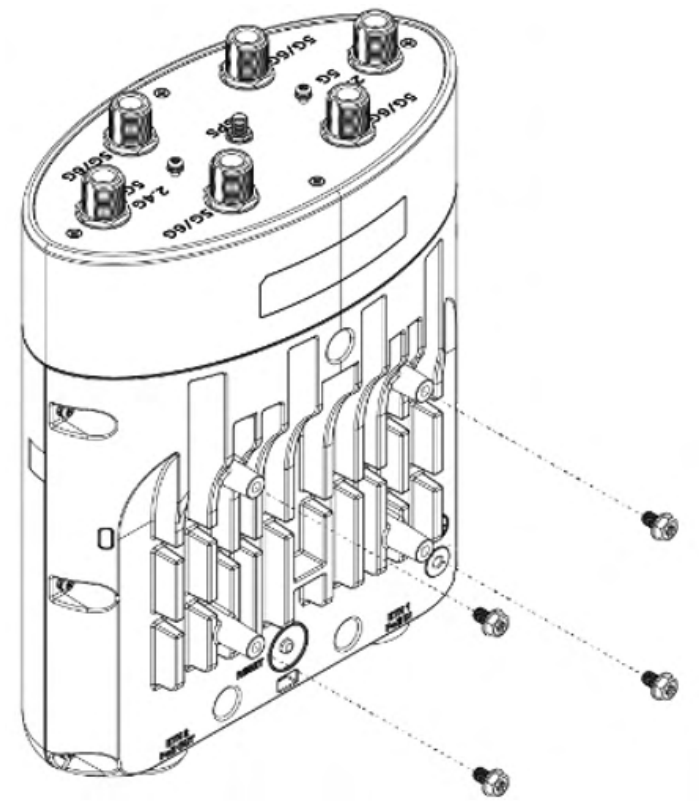

3. Insert the 4 screws through the level bracket and tighten the screw.

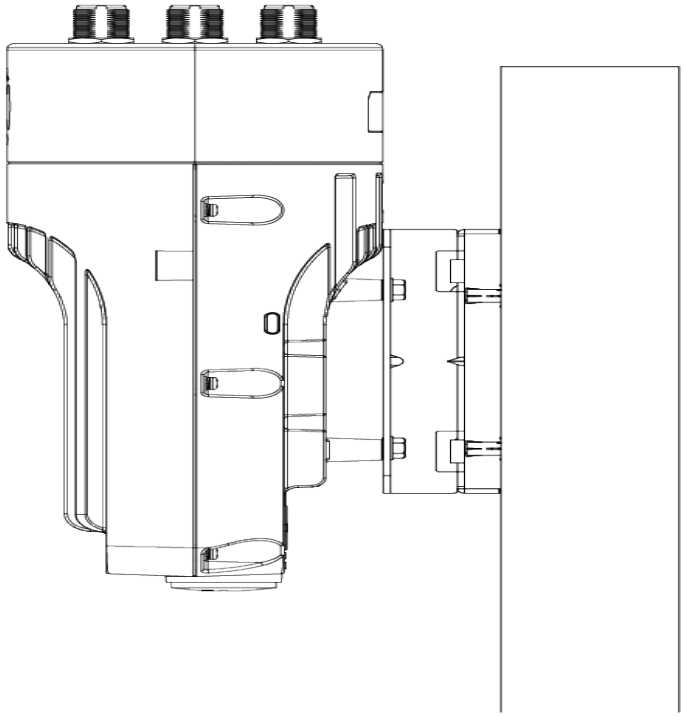

4. Connect the external antennas to the AP.

> **Note**
>
> Enable the AP radios only after properly terminating the RF ports, either by connecting to an antenna or a 50 ohm termination.

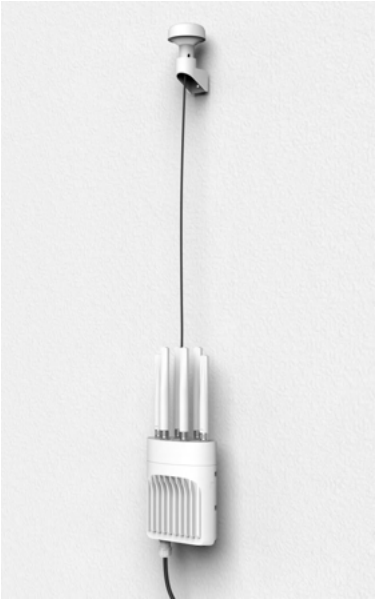

Pole mounting with level bracket

To mount the XE3-4TN unit on the pole, perform the following steps:

1. Insert the hose mounting clamp though the pole mounting level bracket.

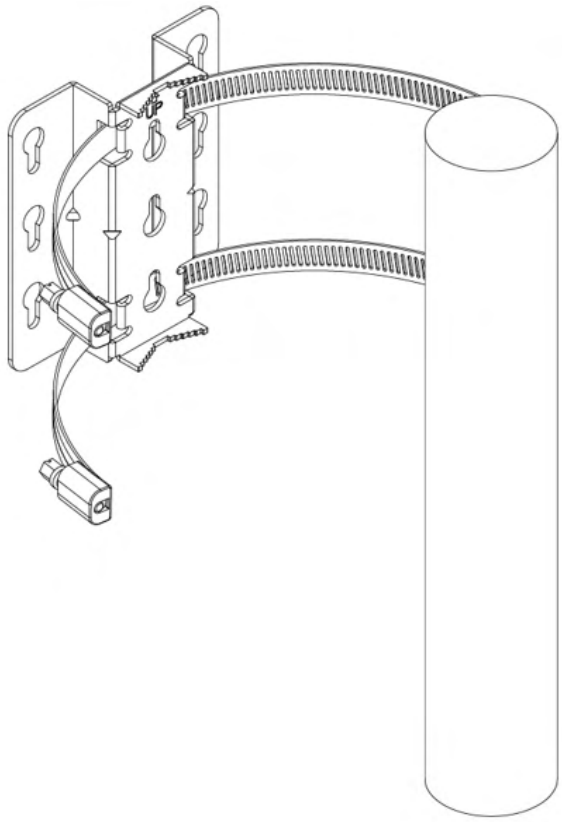

2. Remove the 4 screws from the back side of the AP.

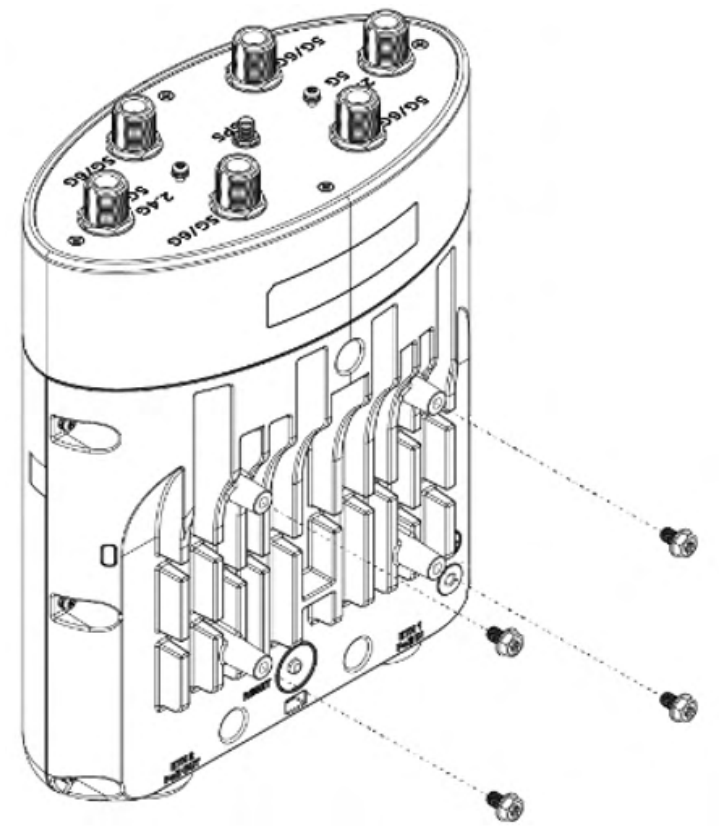

3. Insert the 4 screws through the level bracket and tighten the screw. Fix the clamp to the pole by applying 9.0 Nm torque.

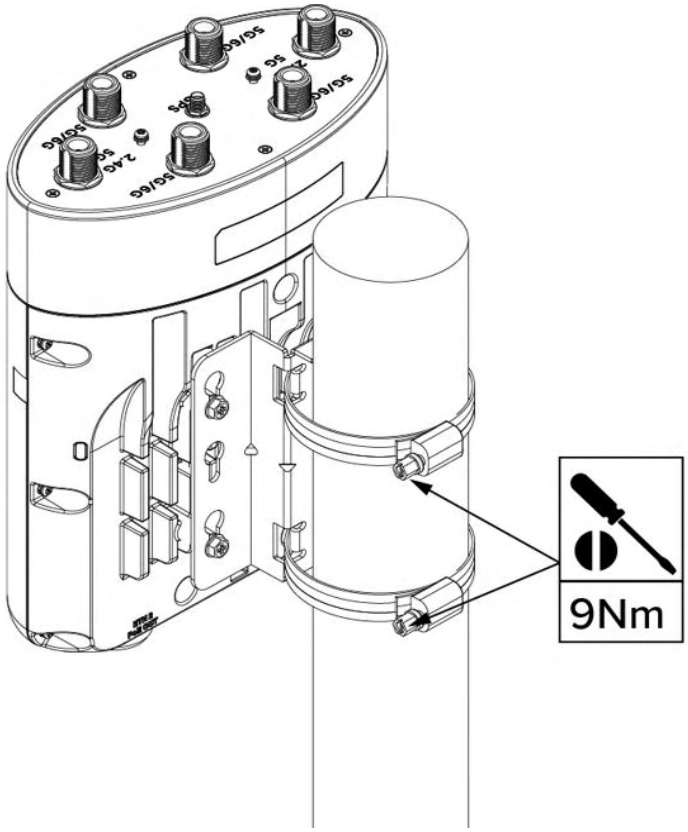

4. Connect the external antennas to the AP.

Note

Enable the AP radios only after properly terminating the RF ports, either by connecting to an antenna or a 50 ohm termination.

Considerations for AP configuration with antennas

Cambium recommends to use the following antennas with XE-4TN outdoor APs:

- ANT-OM-1X1-05 (for any radio)
- ANT-D35-4X4-01 or ANT-D60-4X4-02 (for the 4x4 5 GHz/6 GHz radio)
- ANT-D30-2X2-02 or ANT-D60-2X2-02 (for the 2.4 GHz/5 GHz ports only)
- ANT-GPS-01 (optional but required for FCC/IC standard power operation)

Warning

The XE-4TN AP has undergone certification testing for the above mentioned antennas. Configuring the APs with any other untested antennas may not be complaint and is not recommended.

Configuration option with ANT-D30-4X4-02 or ANT-D60-4X4-01 with ANT-OM-1X1-05. ANT-GPS-01 also shown

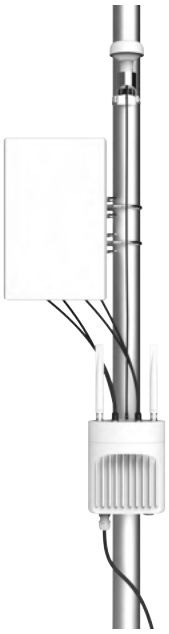

Configuration option with ANT-OM-1X1-05 on all six ports

Configuration option with directional for all radios

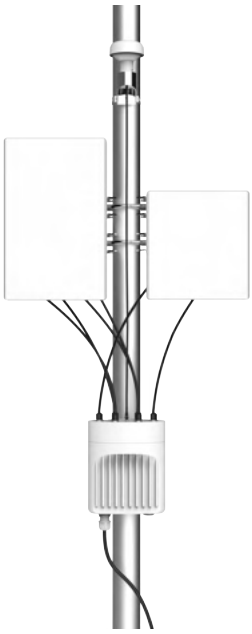

Configuration option with directional antennas for LPI deployment

> **Note**
>
> - LPI is for indoor use only.
> - LPI deployment requires professional installation and must not include the Ethernet connector weather protection gland.

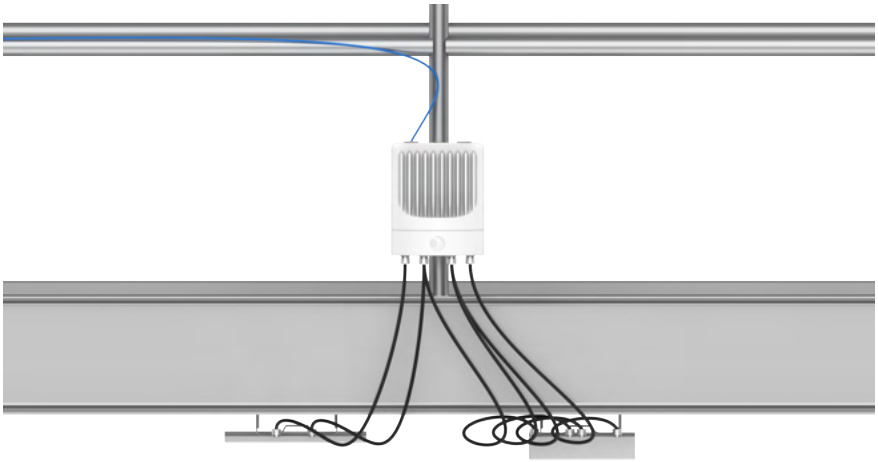

Mounting XV2-21X

The XV2-21X APs are mounted by using one of the following mounting techniques:

- Ceiling mount
- Wall mounting
- T-bar mounting

Ceiling mount

Figure 24 *XV2-21X - Ceiling mount*

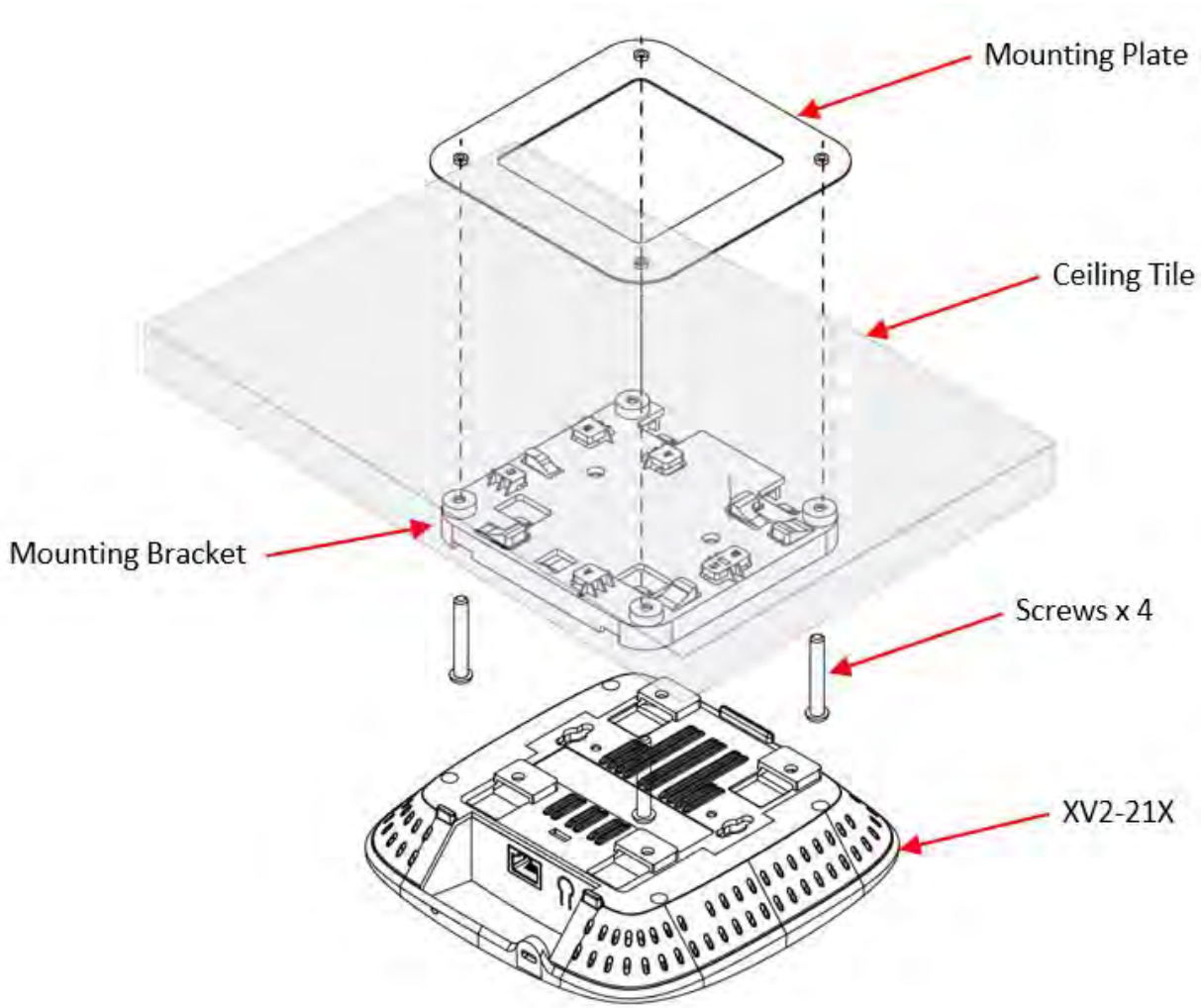

To mount the XV2-21X unit by using the ceiling mount technique, perform the following steps:

1. Determine a place or location where you want to mount the XV2-21X unit.
2. Remove the ceiling tile.
3. Using the hole template, mark the hole locations.
4. Drill the holes for the four mounting screws using a 5 mm (3/6”) diameter drill bit.

5. Drill the RJ45 cable hole using a 15 mm (5/8”) diameter bit.
6. Hold the mounting plate on the top side of the ceiling tile and screw it on the mounting bracket.
7. Run the RJ45 cable (s) through the 15 mm hole and remount the ceiling tile.
8. Attach the RJ45 cable (s) to XV2-21X unit.
9. Slide the XV2-21X unit into the mounting bracket.

Wall mounting

You can mount XV2-21X to any wall by using two screws with corresponding wall anchors. The ceiling mount bracket can be used as a template to align the screws with the unit.

Figure 25 *XV2-21X - Wall mount*

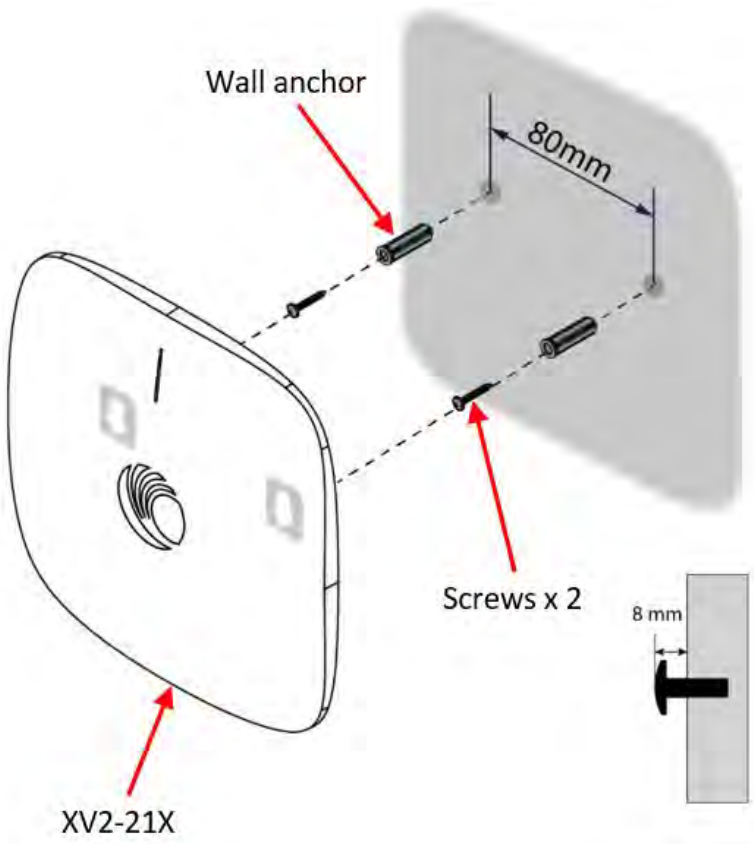

T-bar mounting

38 mm T-Bar

The XV2-21X unit can be secured to a 38 mm ceiling T-bar rail by using the ceiling mount bracket. The **A** marking on the bracket must be used for this width T-bar rail.

Figure 26 *XV2-21X - 38 mm T-Bar mount*

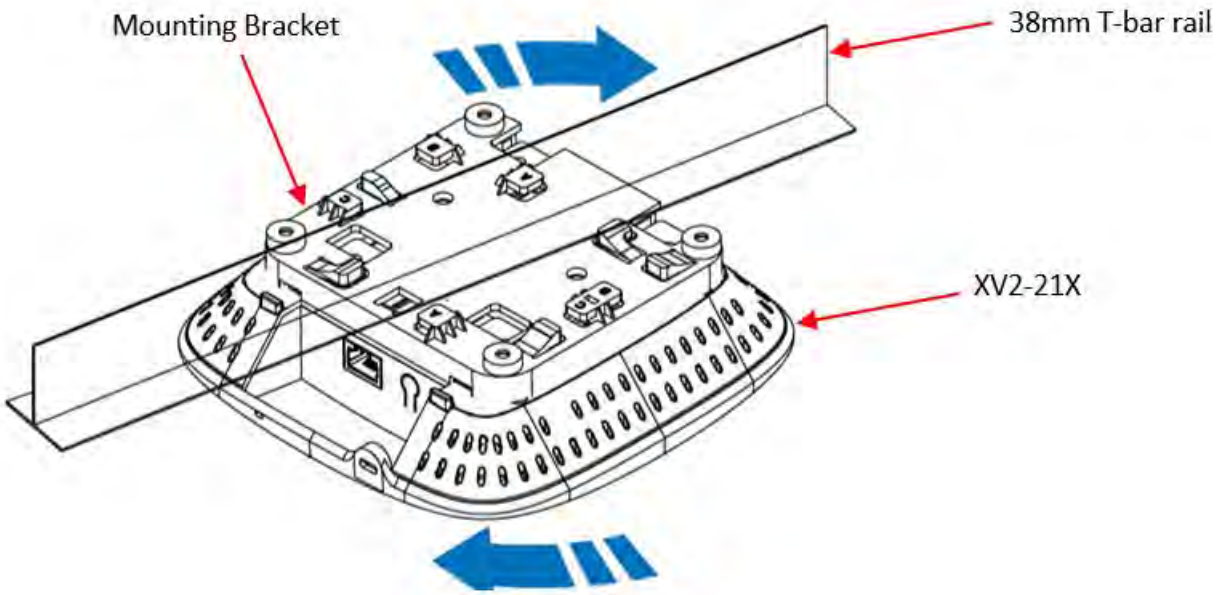

24 mm T-Bar

The XV2-21X unit can be mounted to a 24 mm width T-bar rail using the clips built into the underside of the unit. The **B** marking on the bracket must be used for this width T-bar rail.

Figure 27 *XV2-21X - 24 mm T-Bar mount*

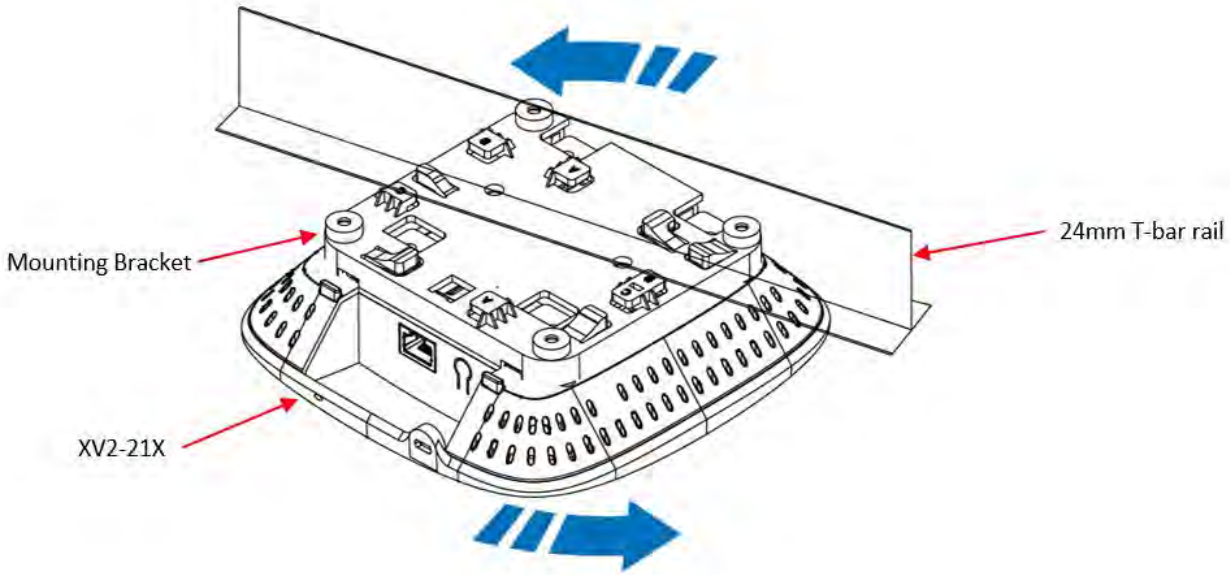

14 mm T-Bar

The XV2-21X unit can be mounted to a 14 mm width T-bar rail using the clips built into the underside of the unit. The **C** marking on the bracket must be used for this width T-bar rail.

Figure 28 *XV2-21X - 14 mm T-Bar mount*

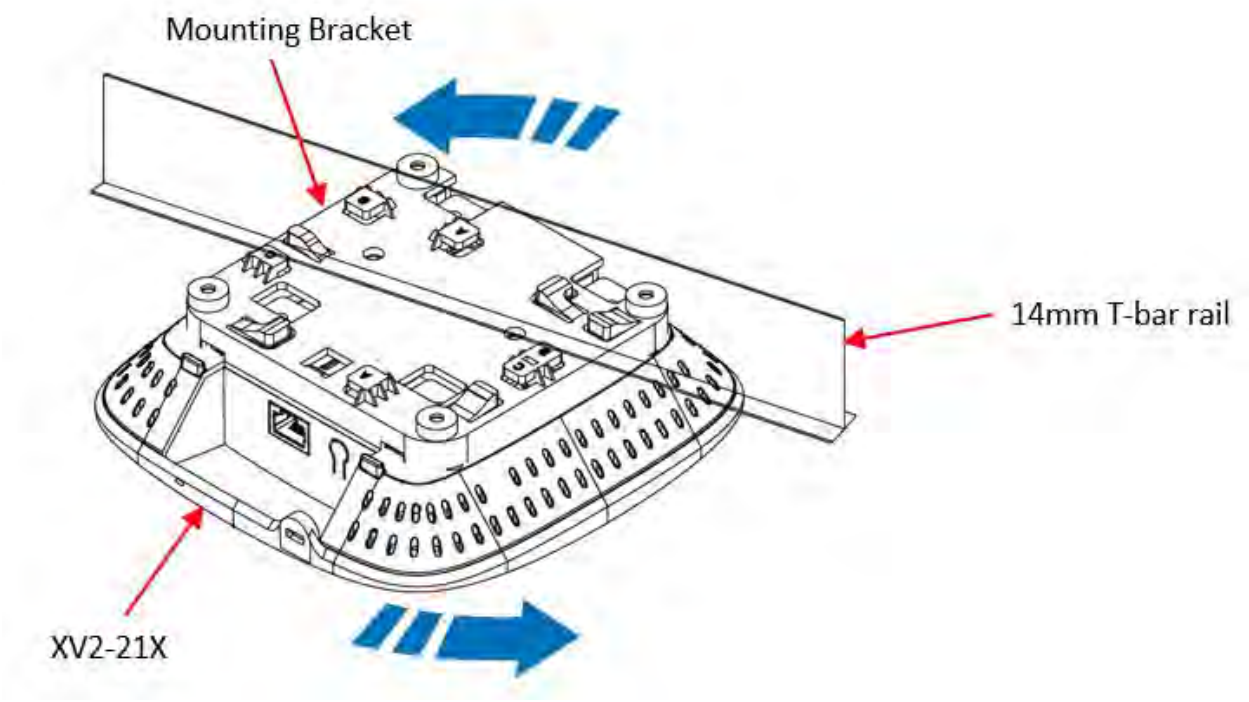

Mounting XV2-23T

The XV2-23T APs are mounted by using one of the following mounting techniques:

- Pole mount
- Wall mounting

Warning

The XV2-23T AP must be mounted at a height less than 4 m.

Pole mount

1. Insert hose clamps through pole mounting bracket and clamp to pole by applying 6.0 Nm torque.

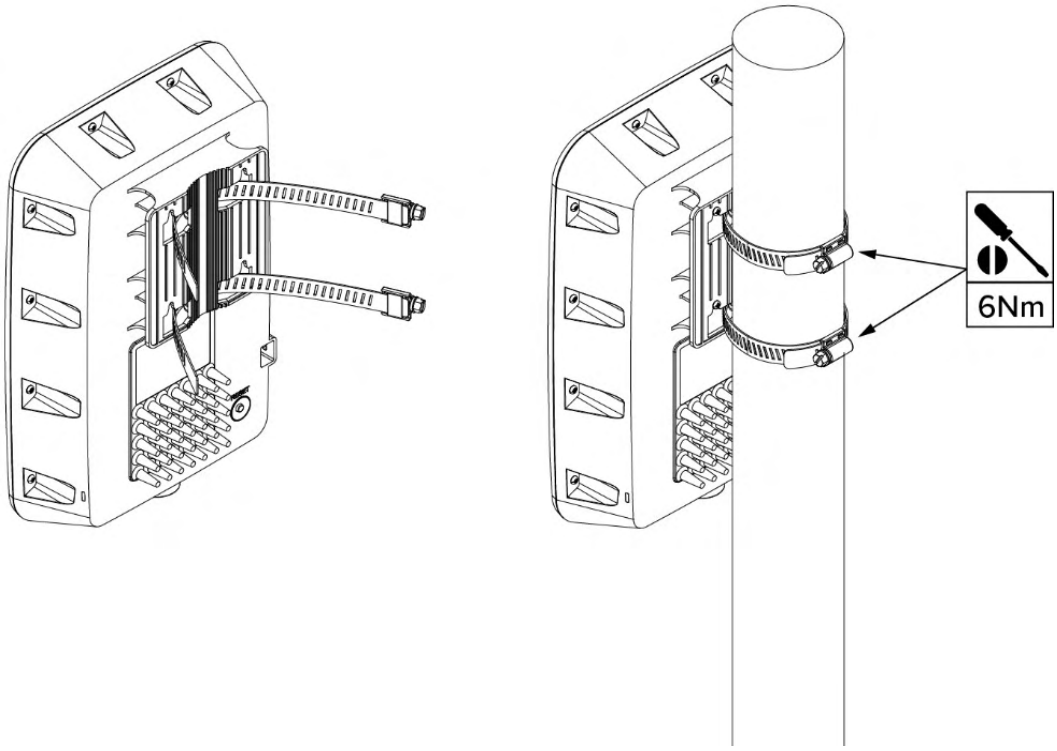

2. Insert RJ45 cable into cable gland, and connect the cable to the device.

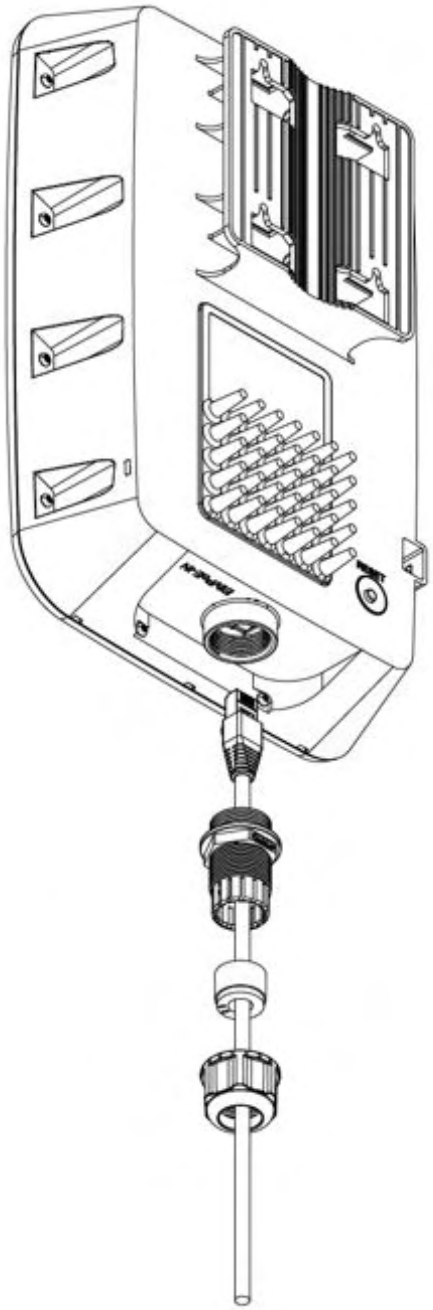

3. Lock cable gland to radio housing and tighten the cable gland.

Wall mounting

1. Drill 4 holes of Ø6 mm (Ø0.25” Inch) on wall.
2. Press fit plastic anchor and assembly fastener.

3. Leave 5 mm to 6 mm gap between wall and fastener head.

4. Use the four mounting slots given on the back of the radio to mount to the wall.

Figure 29 *XV2-23T - Wall mount*

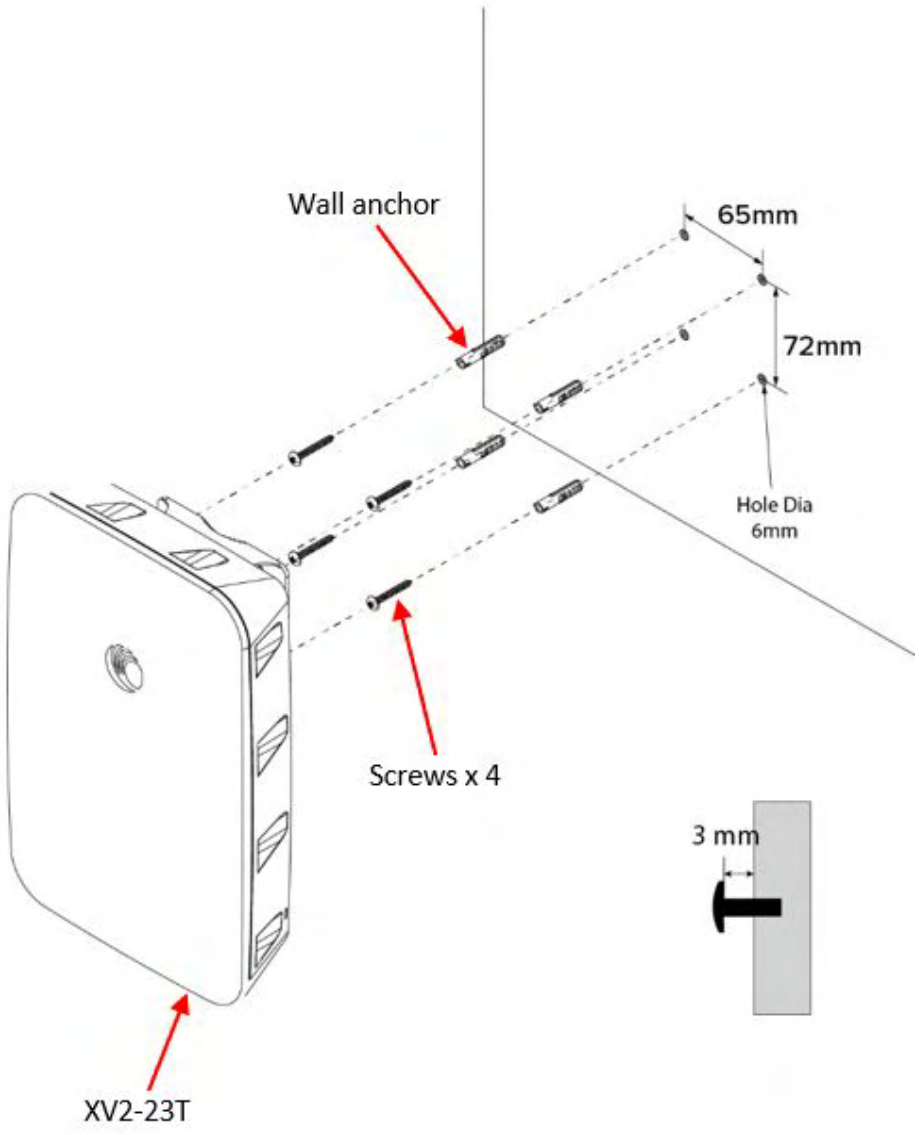

Mounting XV2-22H

The XV2-22H APs are mounted by using one of the following mounting techniques:

- Junction box mounting
- Wall mounting

Junction box mounting

1. Place the junction box bracket on the junction box and secure with at least two screws.
2. Connect the Ethernet cable to the upper RJ-45 port labeled **Eth1/PoE** at the rear side of XV2-22H to provide connectivity. Use the other RJ-45 port labeled **Pass-Through** for any additional cable that might need to pass through XV2-22H.
3. Align the two slots on the rear side of the XV2-22H with two hooks on the bracket.
4. Secure XV2-22H to the bracket with a screw at the bottom edge of XV2-22H using a standard Torx security screw or standard Philips head screw.

Figure 30 *XV2-22H - Junction box mount*

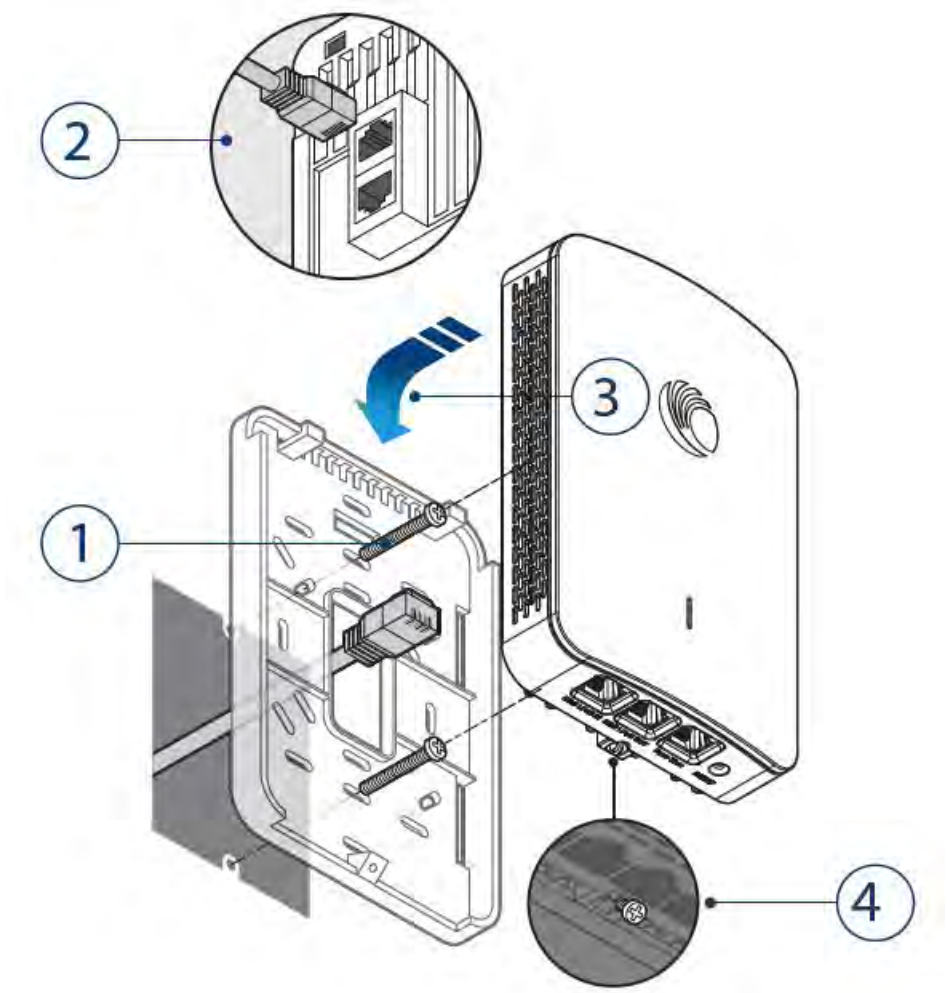

Wall mounting

1. Choose location on the wall to mount the bracket using the four mounting screws and anchors (if needed).
2. Connect the short Ethernet jumper cable between the two RJ-45 connections on the rear side of XV2-22H.
3. Mount XV2-22H into the generic wall bracket by aligning the hooks.
4. Secure XV2-22H to the bracket using Torx (or standard) screw on the lower edge of XV2-22H.
5. Power XV2-22H either with a 48VDC/1A power adapter or using the PASS-THRU port at the bottom edge of the device using Ethernet power.

Figure 31 *XV2-22H - Wall mount*

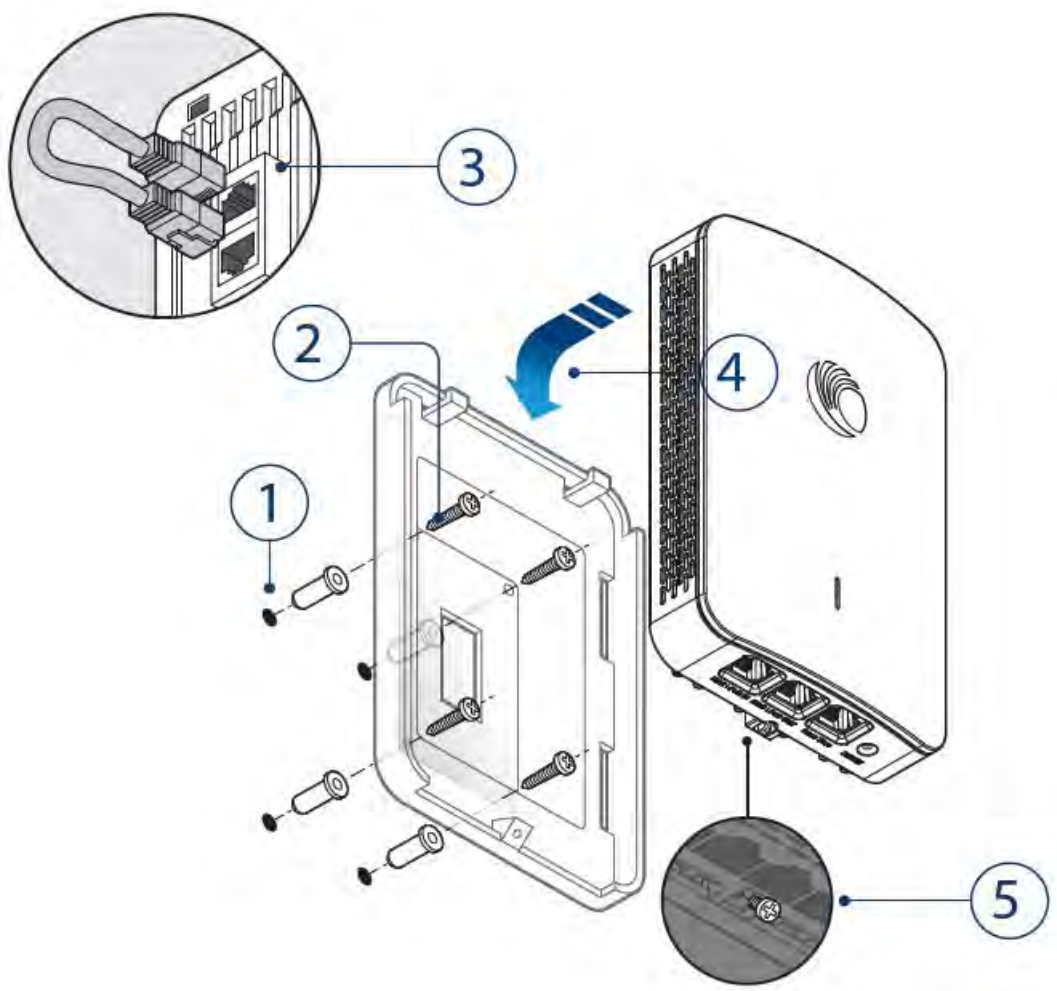

Mounting X7-35X

The X7-35X APs are mounted by using one of the following mounting techniques:

- Ceiling mount
- Wall mounting
- T-bar mounting
- Junction box mounting

Ceiling mount

Figure 32 *X7-35X - Ceiling mount*

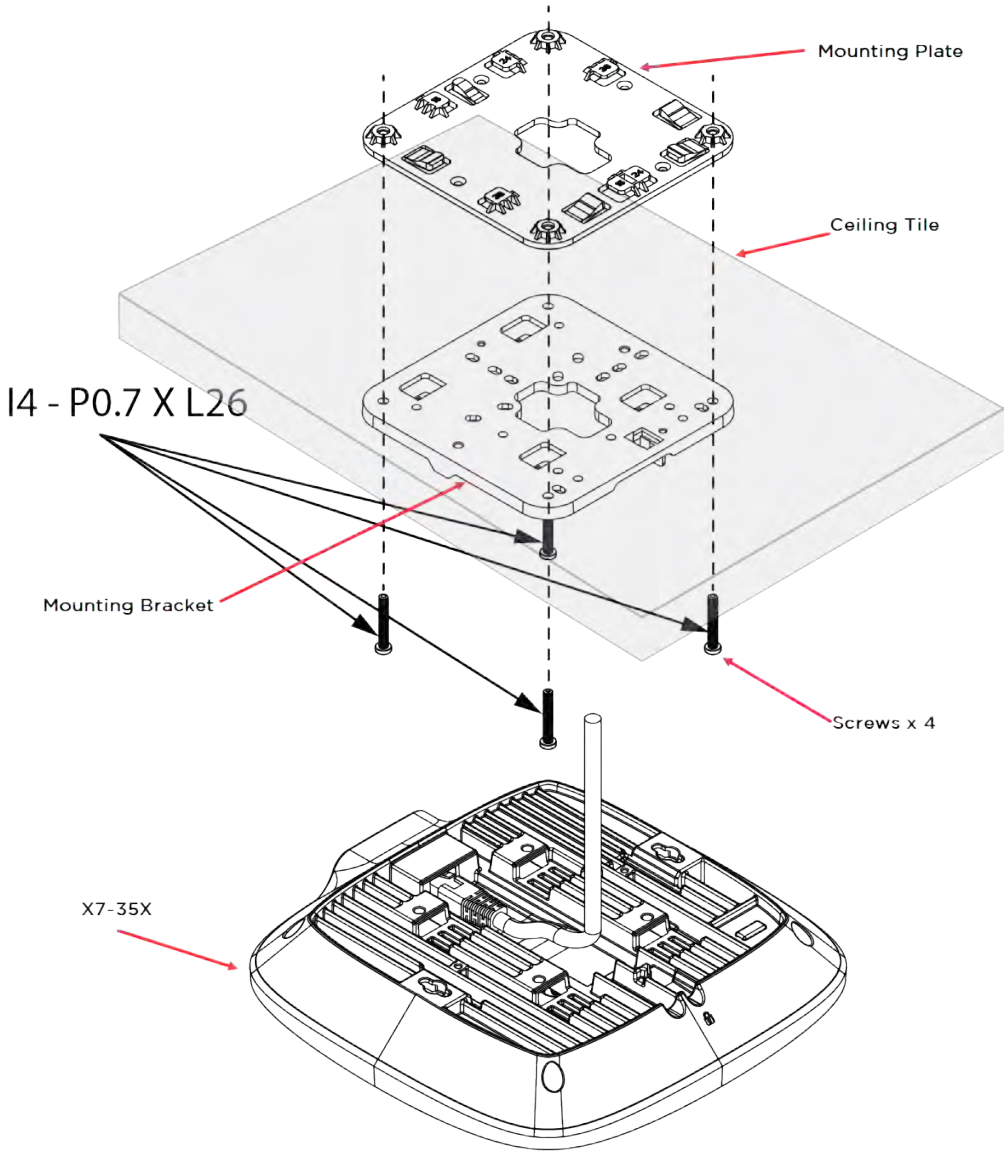

To mount the X7-35X unit by using the ceiling mount technique, perform the following steps:

1. Determine a place or location where you want to mount the X7-35X unit.
2. Remove the ceiling tile.
3. Using the hole template, mark the hole locations.
4. Drill the holes for the four mounting screws using a 5 mm (3/6”) diameter drill bit.
5. Drill the RJ45 cable hole using a 15 mm (5/8”) diameter bit.
6. Hold the mounting plate on the top side of the ceiling tile and screw it on the mounting bracket.
7. Run the RJ45 cable(s) through the 15 mm hole and remount the ceiling tile.
8. Attach the RJ45 cable(s) to the X7-35X unit.
9. Slide the X7-35X unit into the mounting bracket.

Wall mounting

You can mount X7-35X to any wall by one of the following two options:

- Option 1—By using two screws with corresponding wall anchors. The ceiling mount bracket can be used as a template to align the screws with the unit.
- Option 2—By using the mounting bracket and four screws with corresponding wall anchors.

Figure 33 *X7-35X - Wall mount*

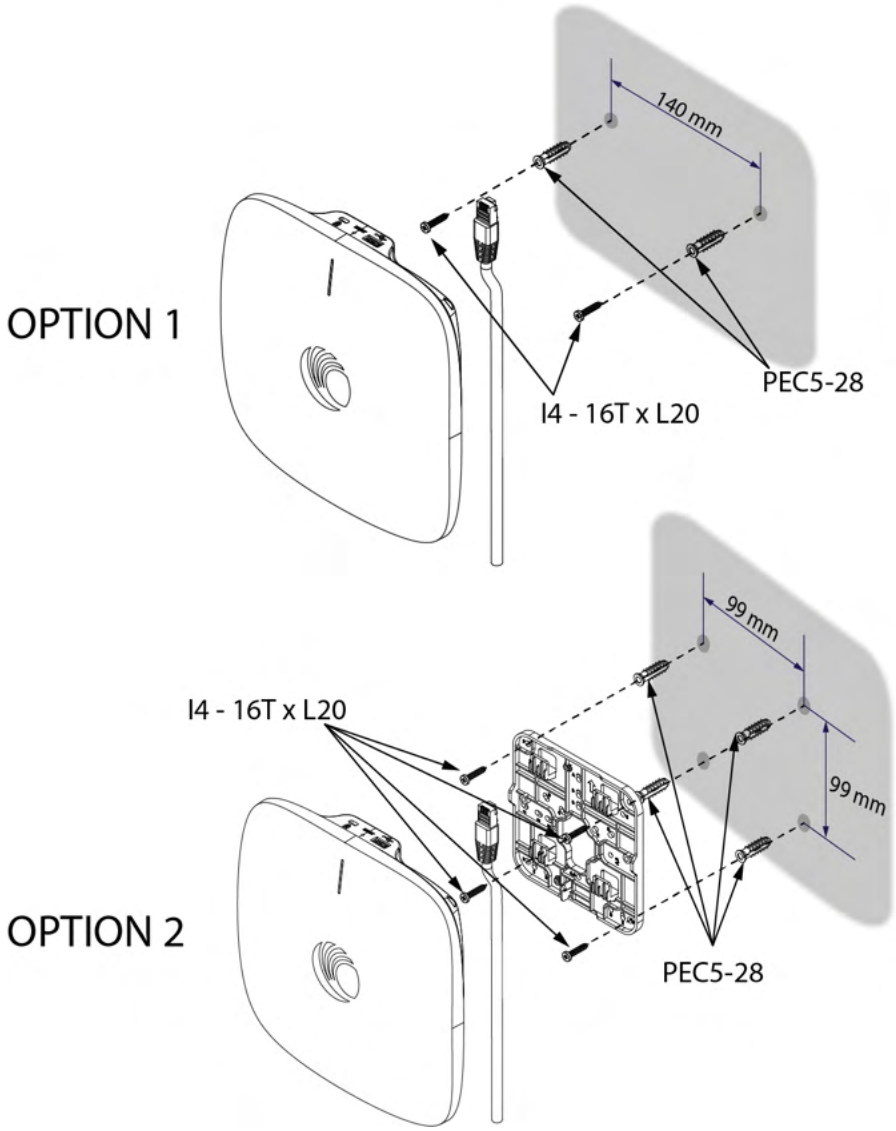

T-bar mounting

The X7-35X unit can be secured to a ceiling T-bar rail by using the ceiling mount bracket. The **A** marking on the bracket must be used for T-bar rail with this width.

Figure 34 *X7-35X - T-Bar mount*

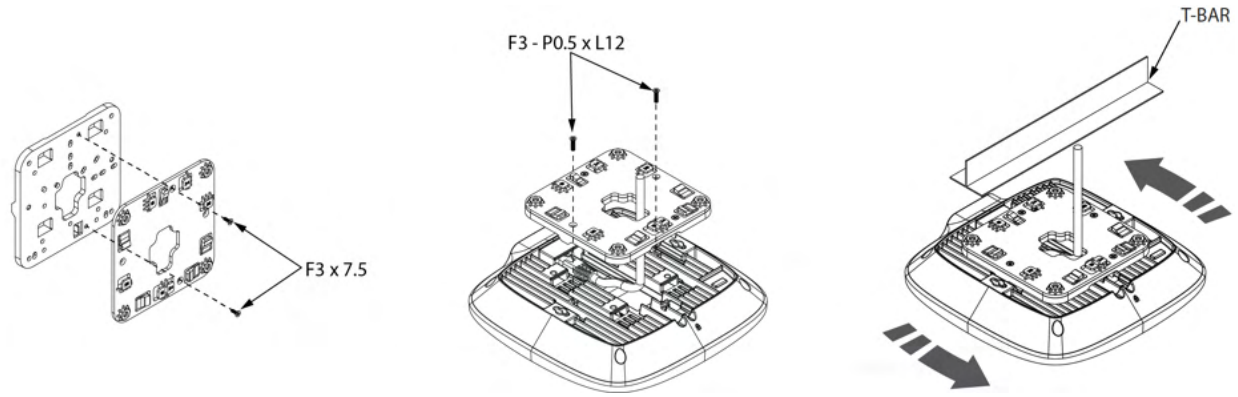

Junction box mounting

1. Place the junction box bracket on the junction box and secure with at least two screws.
2. Connect the Ethernet cable to the RJ-45 port at the rear side of X7-35X to provide connectivity.
3. Align the four slots on the rear side of the X7-35X with the four hooks on the bracket.

Figure 35 *X7-35X - Junction box mount*

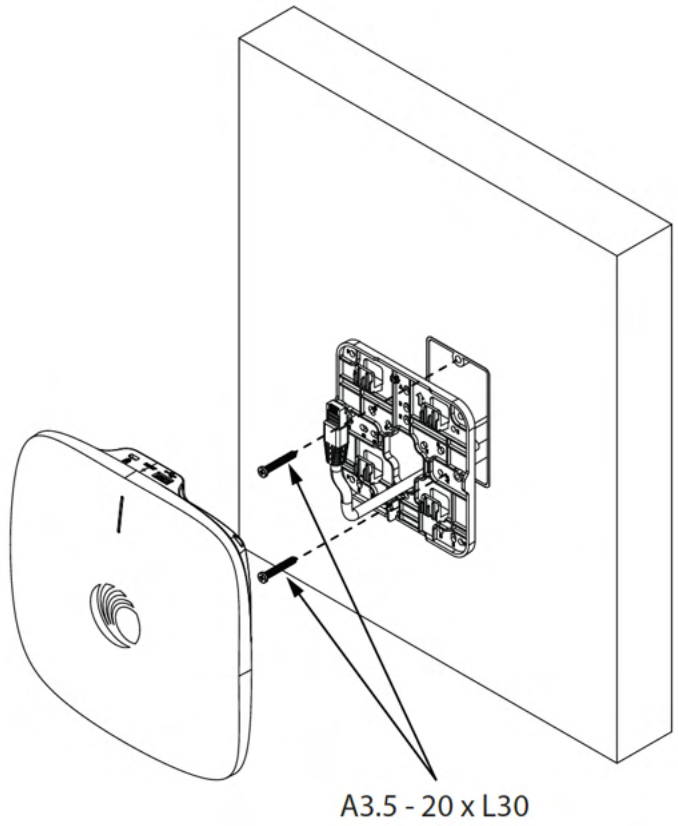

Unlocking the Enterprise Wi-Fi 7 AP bracket

To unlock the Enterprise Wi-Fi 7 AP bracket, complete the following steps:

1. Insert a flathead screw-driver and twist to unlock as shown in the figure below.
2. Slide the AP in the direction shown in the figure to disassemble from the bracket.

Figure 36 *Unlocking the bracket*

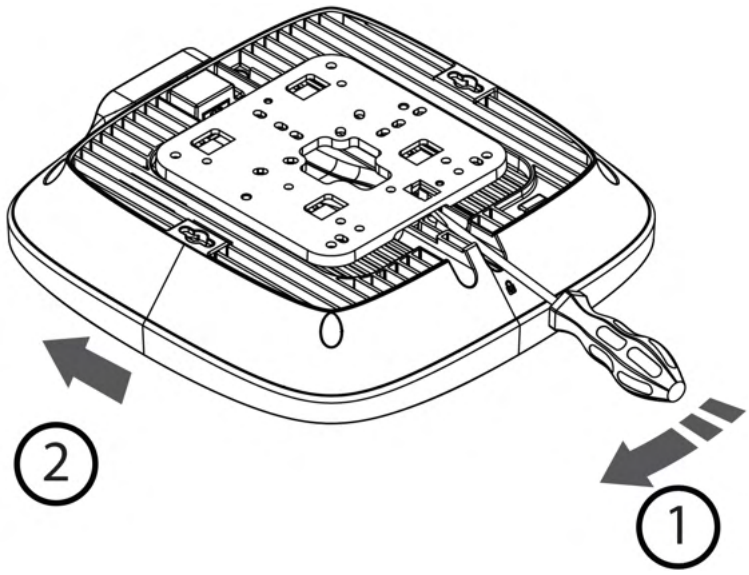

Cambium Networks

Cambium Networks delivers wireless communications that work for businesses, communities, and cities worldwide. Millions of our radios are deployed to connect people, places, and things with a unified wireless fabric that spans multiple standards and frequencies of fixed wireless and Wi-Fi, all managed centrally via the cloud. Our multi-gigabit wireless fabric offers a compelling value proposition over traditional fiber and alternative wireless solutions. We work with our Cambium certified Connected Partners to deliver purpose built networks for service provider, enterprise, industrial, and government connectivity solutions in urban, suburban, and rural environments, with wireless that just works.

Support website	https://support.cambiumnetworks.com
Support enquiries	
Technical training	https://learning.cambiumnetworks.com/learn
Main website	http://www.cambiumnetworks.com
Sales enquiries	solutions@cambiumnetworks.com
Warranty	https://www.cambiumnetworks.com/support/standard-warranty/
Telephone number list	http://www.cambiumnetworks.com/contact-us/
User Guides	http://www.cambiumnetworks.com/guides
Address	Cambium Networks Limited, Unit B2, Linhay Business Park, Eastern Road, Ashburton, Devon, TQ13 7UP United Kingdom

Cambium Networks™

www.cambiumnetworks.com

Cambium Networks and the stylized circular logo are trademarks of Cambium Networks, Ltd. All other trademarks are the property of their respective owners.

Copyright © 2025 Cambium Networks, Ltd. All rights reserved.