Cambium Networks™

QUICK START GUIDE

Force 4518

Reservation of Rights

Cambium reserves the right to make changes to any products described herein to improve reliability, function, or design, and reserves the right to revise this document and to make changes from time to time in content hereof with no obligation to notify any person of revisions or changes. Cambium recommends reviewing the Cambium Networks website for the latest changes and updates to products. Cambium does not assume any liability arising out of the application or use of any product, software, or circuit described herein; neither does it convey license under its patent rights or the rights of others. It is possible that this publication may contain references to, or information about Cambium products (machines and programs), programming, or services that are not announced in your country. Such references or information must not be construed to mean that Cambium intends to announce such Cambium products, programming, or services in your country.

Copyrights

This document, Cambium products, and 3rd Party software products described in this document may include or describe copyrighted Cambium and other 3rd Party supplied computer programs stored in semiconductor memories or other media. Laws in the United States and other countries preserve for Cambium, its licensors, and other 3rd Party supplied software certain exclusive rights for copyrighted material, including the exclusive right to copy, reproduce in any form, distribute and make derivative works of the copyrighted material. Accordingly, any copyrighted material of Cambium, its licensors, or the 3rd Party software supplied material contained in the Cambium products described in this document may not be copied, reproduced, reverse engineered, distributed, merged or modified in any manner without the express written permission of Cambium. Furthermore, the purchase of Cambium products shall not be deemed to grant either directly or by implication, estoppel, or otherwise, any license under the copyrights, patents or patent applications of Cambium or other 3rd Party supplied software, except for the normal non-exclusive, royalty free license to use that arises by operation of law in the sale of a product.

Restrictions

Software and documentation are copyrighted materials. Making unauthorized copies is prohibited by law. No part of the software or documentation may be reproduced, transmitted, transcribed, stored in a retrieval system, or translated into any language or computer language, in any form or by any means, without prior written permission of Cambium.

License Agreements

The software described in this document is the property of Cambium and its licensors. It is furnished by express license agreement only and may be used only in accordance with the terms of such an agreement.

High Risk Materials

Cambium and its supplier(s) specifically disclaim any express or implied warranty of fitness for any high-risk activities or uses of its products including, but not limited to, the operation of nuclear facilities, aircraft navigation or aircraft communication systems, air traffic control, life support, or weapons systems (“High Risk Use”).

This product is not restricted in the EU. Any High Risk is unauthorized, is made at your own risk and you shall be responsible for any and all losses, damage or claims arising out of any High-Risk Use.

© 2025 Cambium Networks Limited. All rights reserved

Contents

Contents 3

About This Guide 6

Problems and warranty 6

Reporting problems 6

Repair and service 6

Warranty 6

Security advice 7

Precautionary statements 7

Warning 7

Federal Communication Commission Interference Statement 7

IC Interference Statement 8

Attention 9

Note 9

Caring for the environment 9

In EU countries 10

In non-EU countries 10

Product Description 11

Overview of ePMP 11

Purpose - ePMP portfolio 11

ePMP 5 GHz Force 4518 SM 11

Typical installation equipment 12

Wireless operation 12

MIMO 12

Time-division duplexing 12

Adaptive modulation 12

Radar avoidance 12

Encryption 13

Country codes 13

Further reading on wireless operation 13

System management 14
Management agent 14
Webserver 14
SNMP 15
Network Time Protocol (NTP) 15
Software upgrade 15
Further reading on system management 15
System Hardware 16
Site planning 16
Site installation 16
Grounding and lightning protection 16
Lightning protection zones 18
Electromagnetic Compatibility (EMC) compliance 19
ePMP 5 GHz Force 4518 SM 20
Integrated description 20
Part numbers 20
Interfaces 21
Specifications 21
Heater 22
Wind loading 22
Installation 23
Software packages 25
Power supply 25
Power supply description 25
Power supply part numbers 26
Power supply interfaces 27
Power supply specifications 27
Power supply location considerations 28
Ethernet cabling 28
Ethernet standards and cable lengths 28
Outdoor Cat5e cable 29

Surge suppression unit 29
Gigabit Ethernet Surge Suppressor 30
Regulatory Information 31
General wireless specifications 31
Regulatory limits 31
Conforming to the limits 32
Available spectrum 32
Channel bandwidth 32
Electromagnetic Compatibility (EMC) compliance 32
Compliance with safety standards 33
Glossary 34
Cambium Networks 36

About This Guide

This guide describes the planning, installation, configuration, and operation of the Cambium ePMP Series of point-to-multipoint and point-to-point wireless Ethernet systems. It is intended for use by the system designer, system installer, and system administrator.

This section contains the following topics:

- Problems and warranty
- Security advice
- Precautionary statements
- Caring for the environment

Problems and warranty

Reporting problems

Cambium Networks offers comprehensive support to ensure optimal network performance, including training, online documentation, technical support, community forums, software downloads, warranty services, and repairs.

Through the Cambium Networks Support Center https://support.cambiumnetworks.com/ you can:

- Submit support requests
- Submit RMA request
- View support global contact numbers

Additional information including field service bulletins, license key information, warranty details, security advisories, Cambium Networks Care program descriptions, regional codes for PTP solutions, and compliance requirements can be viewed at https://www.cambiumnetworks.com/support/.

Repair and service

If unit failure is suspected, obtain details of the Return Material Authorization (RMA) process from the Cambium Networks support site.

Warranty

For products shipped after October 1st, 2018 Cambium Networks' standard hardware warranty is for three (3) years from the date of shipment from Cambium Networks or a Cambium Networks distributor. Cambium Networks warrants that hardware will conform to the relevant published specifications and will be free from material defects in material and workmanship under normal use and service. Cambium Networks shall within this time, at its own option, either repair or replace the defective product within thirty (30) days of receipt of the defective product. Repaired or replaced products will be subject to the original warranty period but not less than thirty (30) days.

To register ePMP products or activate warranties, visit the Cambium Networks support site.

For warranty assistance, contact the reseller or distributor.

Attention

Do not open the radio housing for repair or diagnostics; there are no serviceable parts within the housing.

Portions of Cambium equipment may be damaged from exposure to electrostatic discharge. Use precautions to prevent damage.

Security advice

Cambium Networks' systems and equipment provide security parameters that can be configured by the operator based on their particular operating environment. Cambium Networks recommends setting and using these parameters following industry-recognized security practices. Security aspects to be considered are protecting the confidentiality, integrity, and availability of information and assets. Assets include the ability to communicate, information about the nature of the communications, and information about the parties involved.

In certain instances Cambium Networks make specific recommendations regarding security practices, however, the implementation of these recommendations and final responsibility for the security of the system lies with the operator of the system.

ePMP equipment from Cambium Networks is shipped with the default web management interface login credentials. It is highly recommended that, these usernames and passwords are modified before system installation.

Precautionary statements

This section explains the precautionary statements used in this document.

Warning

Precautionary statements with the Warning tag precede instructions that contain potentially hazardous situations. Warnings are used to alert the reader to possible hazards that could cause loss of life or physical injury. A warning has the following format:

Warning

Text and consequence for not following the instructions in the warning.

Federal Communication Commission Interference Statement

This equipment has been tested and found to comply with the limits for a Class B digital device, pursuant to Part 15 of the FCC Rules. These limits are designed to provide reasonable protection against harmful interference in a residential installation. This equipment generates, uses and can radiate radio frequency energy and, if not installed and used in accordance with the instructions, may cause harmful interference to radio communications. However, there is no guarantee that interference will not occur in a particular installation. If this equipment does cause harmful interference to radio or television reception, which can be determined by turning the equipment off and on, the user is encouraged to try to correct the interference by one of the following measures:

- Reorient or relocate the receiving antenna.
- Increase the separation between the equipment and receiver.
- Connect the equipment into an outlet on a circuit different from that to which the receiver is connected.
- Consult the dealer or an experienced radio/TV technician for help.

Table 1: FCC ID

Equipment	Model Number	FCC ID
ePMP 5 GHz Force 4518 SM	C050940P031A (ETSI)	Z8H89FT0088
	C058940P132A (FCC)	109W-0088

Caution

Any changes or modifications not expressly approved by the party responsible for compliance could void the user's authority to operate this equipment.

This device complies with Part 15 of the FCC Rules. Operation is subject to the following two conditions:

(1) This device may not cause harmful interference, and

(2) this device must accept any interference received, including interference that may cause undesired operation.

IMPORTANT NOTE

FCC Radiation Exposure Statement

This equipment complies with FCC radiation exposure limits set forth for an uncontrolled environment. This equipment should be installed and operated with minimum distance 30 cm between the radiator and your body.

IC Interference Statement

This device contains licence-exempt transmitter(s)/receiver(s) that comply with Innovation, Science and Economic Development Canada's licence-exempt RSS(s). Operation is subject to the following two conditions:

(1) This device may not cause interference.

(2) This device must accept any interference, including interference that may cause undesired operation of the device.

Cet appareil contient des émetteurs / récepteurs exempts de licence qui sont conformes au (x) RSS (s) exemptés de licence d'Innovation, Sciences et Développement économique Canada. L'opération est soumise aux deux conditions suivantes:

(1) Cet appareil ne doit pas provoquer d'interférences.

(2) Cet appareil doit accepter toute interférence, y compris les interférences susceptibles de provoquer un fonctionnement indésirable de l'appareil.

IC MPE distance: 20 cm

Warning

Devices shall not be used for control of or communications with unmanned aircraft systems.

Les appareils ne doivent pas être utilisés pour contrôler ou communiquer avec des systèmes d'aéronefs sans pilote.

Warning

Operation on oil platforms, automobiles, trains, maritime vessels and aircraft shall be prohibited.

L'exploitation sur les plates-formes pétrolières, les automobiles, les trains, les navires maritimes et les aéronefs est interdite.

Warning

The antenna height shall be determined by the installer or operator of the standard-power access point or fixed client device, or by automatic means. This information shall be stored internally in the device. Provision of accurate device information is mandatory.

La hauteur de l'antenne doit être déterminée par l'installateur ou l'opérateur du point d'accès à puissance standard ou de l'appareil client fixe, ou par des moyens automatiques. Ces informations doivent être stockées en interne dans l'appareil. La fourniture d'informations précises sur l'appareil est obligatoire.

IMPORTANT NOTE

IC Radiation Exposure Statement:

This equipment complies with IC RSS-102 radiation exposure limits set forth for an uncontrolled environment. This equipment should be installed and operated with minimum distance 20 cm between the radiator and your body.

Cet équipement est conforme aux limites d'exposition aux rayonnements IC établies pour un environnement non contrôlé. Cet équipement doit être installé et utilisé avec un minimum de 20 cm de distance entre la source de rayonnement et votre corps.

Attention

Precautionary statements with the Attention tag precede instructions that are used when there is a possibility of damage to systems, software, or individual items of equipment within a system. However, this damage presents no danger to personnel. An attention statement has the following format:

Attention

Text and consequence for not following the instructions.

Note

Precautionary statements with the Note tag indicate the possibility of an undesirable situation or provide additional information to help the reader understand a topic or concept. A note has the following format:

Note

Text.

Caring for the environment

The following information describes national or regional requirements for the disposal of Cambium Networks supplied equipment and for the approved disposal of surplus packaging.

In EU countries

The following information is provided to enable regulatory compliance with the European Union (EU) directives identified and any amendments made to these directives when using Cambium Networks equipment in the EU countries.

Disposal of Cambium Networks equipment

European Union (EU) Directive 2002/96/EC Waste Electrical and Electronic Equipment (WEEE).

Do not dispose of Cambium Networks equipment in landfill sites. For disposal instructions, see https://support.cambiumnetworks.com

Disposal of surplus packaging

Do not dispose of surplus packaging in landfill sites. In the EU, it is the individual recipient's responsibility to ensure that packaging materials are collected and recycled according to the requirements of EU environmental law.

In non-EU countries

In non-EU countries, dispose of Cambium Networks equipment and all surplus packaging in accordance with national and regional regulations.

Product Description

This section provides a high-level description of the ePMP products. It describes the function of the product, the main product variants, and the typical installation. It also describes the main hardware components.

The following topics are described in this chapter:

- The key features, typical uses, product variants, and components of the ePMP are explained in the Overview of ePMP.
- ePMP wireless link is operations, including modulation modes, power control, and security is described under Wireless operation.
- The ePMP management system, including the web interface, installation, configuration, alerts, and upgrades is described in System management.

Overview of ePMP

This section introduces the key features, typical uses, product variants, and components of the ePMP portfolio as a whole (ePMP fourth-generation) products.

Purpose – ePMP portfolio

ePMP Series products from Cambium Networks are designed for Ethernet bridging over Point-to-Multipoint (PMP) and Point-to-Point (PTP) microwave links in the unlicensed 2.4 GHz, 2.5 GHz (Brazil only), 5 GHz, and 6 GHz bands.

Attention

Ensure that the ePMP Series comply with the local operating regulations.

ePMP devices support Point-to-Point microwave links in the unlicensed 5 GHz and 6 GHz bands.

The ePMP Series acts as a transparent bridge between two segments of the operator and customers' networks. In this sense, it can be treated as a virtual wired connection between the Access Point (AP) and the Subscriber Module (SM). The ePMP series forwards Ethernet packets destined for the other part of the network and filters packets it does not need to forward and can deliver uni-cast data to unknown destinations as broadcast, similar to a switch functionality.

ePMP 5 GHz Force 4518 SM

ePMP 5 GHz Force 4518 SM is a self-contained transceiver unit that houses both radio and networking electronics. The ePMP 5 GHz Force 4518 SM uses 802.11ax technology and supports MU-MIMO. It is powered by standard power-over-Ethernet to a 1000BASE-T port.

ePMP 5 GHz Force 4518 SM is shown in Figure 1.

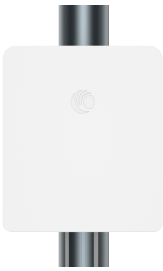

Figure 1: *ePMP 5 GHz Force 4518 SM integrated*

Typical installation equipment

The ePMP™ solution includes integrated units, indoor power supply units/LAN injectors, cabling, and surge suppression equipment.

For more information about these components, including interfaces, specifications, and Cambium part numbers, see System Hardware.

Note

This product meets the UL/cUL 62368 / IEC 62368 edition 2 specification, and the radio housings are designed to be rain-tight.

Wireless operation

This section describes ePMP wireless link operating methods, modulation modes, power control, and security.

MIMO

The Multiple-Input Multiple-Output (MIMO) technique protects against the fading and increases the probability of a received decoded signal being usable.

Time-division duplexing

TDD cycle

ePMP links operate using Time Division Duplexing (TDD). In each TDD cycle, the Access Point (AP) determines which Subscriber Modules (SMs) transmit and the timing based on the configured downlink/uplink ratio (duty cycle). Three fixed downlink/uplink frame ratios are available: 75/25, 50/50, and 30/70.

Adaptive modulation

Force 4518 can transmit a data over the wireless link using several different modulation modes ranging from 1024-QAM to QPSK. For a given channel bandwidth and TDD frame structure, each modulation mode transmits data at a fixed rate. Also, the receiver requires a given signal-to-noise ratio to successfully demodulate a given modulation mode. Although the more complex modulations such as 1024-QAM transmits data at a more higher rate than the less complex modulation modes, the receiver requires a much higher signal-to-noise ratio.

Force 4518 provides an adaptive modulation scheme where the receiver constantly monitors the quality of the received signal and notifies the far end of the link of the optimum modulation mode with which to transmit. In this way, optimum capacity is achieved at all times.

Radar avoidance

In regions where the protection of radars is a part of the local regulations, ePMP must detect interference from radar-like systems and avoid co-channel operation with these systems.

To meet this requirement, ePMP implements the following features:

- The equipment can only transmits on available channels, of which there are none at initial power-up. The radar detection algorithm always scan a usable channel for 60 seconds for radar interference before making the channel an available channel.

- This compulsory channel scan means that there is at least 60 seconds service outage every time radar is detected, and that the installation time is extended by at least 60 seconds even if there is no radar on the channel.

There is a secondary requirement for bands requiring radar avoidance. Regulators have mandated that products provide a uniform loading of the spectrum across all devices. In general, this prevents operation with fixed frequency allocations as follows:

- ETSI regulations allow frequency planning of networks (as that has the same effect of spreading the load across the spectrum).
- The FCC allows the channels to be avoided if there is actual interference on them.

Note

When operating in a region that requires DFS, ensure that the AP is configured with alternate frequencies and the SM is configured to scan for these frequencies to avoid long outages.

Encryption

ePMP supports optional encryption for data transmitted over the wireless link. The encryption algorithm used is the Advanced Encryption Standard (AES) with a 128-bit key size. AES is a symmetric encryption algorithm approved by U.S. Government organizations (and others) to protect sensitive information.

Note

AES with a 256-bit key size is supported and can be ordered separately using SKU C050900S600A.

Country codes

Some aspects of the wireless operation are controlled, enforced, or restricted according to a country code. ePMP country codes represent individual countries (for example Denmark) or regulatory regions (for example FCC or ETSI).

Country codes affect the following aspects of wireless operation:

- Maximum transmit power
- Radar avoidance (upcoming release)
- Frequency range

Attention

To avoid possible enforcement action by the country regulator, always operate links in accordance with the local regulations.

Further reading on wireless operation

For information on planning wireless operation, see:

- The regulatory restrictions that affect radio spectrum usages, such as frequency range and radar avoidance are described in Radio spectrum planning.
- The safety specifications against which the ePMP is tested are listed under Compliance with safety standards . It also describes how to keep RF exposure within safe limits.

- ePMP complies with the radio regulations that are enforced in various countries are explained in Compliance with radio regulations.

For more information on configuring and operating the wireless link, see:

- The configuration parameters of the ePMP devices are described in Using the menu options.

System management

This section describes the ePMP management system, including the web interfaces, installation, alerts, upgrades, configuration, and management software.

Management agent

ePMP equipment is managed through an embedded management agent. Management workstations, network management systems, or PCs can be connected to this agent using the module's Ethernet port, SFP port, over the air (Subscriber Module connection through AP), or by using the device Wi-Fi management interface.

The management agent supports the following interfaces:

- Hypertext Transfer Protocol (HTTP)
- Hypertext Transfer Protocol Secure (HTTPs)
- Simple Network Management Protocol (SNMP)
- Network Time Protocol (NTP)
- System logging (Syslog)
- cnMaestro™ Cloud-based or On-premises Management System
- Dynamic Host Configuration Protocol (DHCP)

Webserver

The ePMP management agent contains a web server. The web server supports access through the HTTP and HTTPs interfaces.

Web-based management offers a convenient way to manage the ePMP equipment from a locally connected computer or from a network management workstation connected through a management network, without requiring any special management software. The web-based interfaces are the only interfaces supported for the installation of ePMP, and the majority of ePMP configuration management tasks.

Identity-based user accounts

When identity-based user accounts are configured, a security officer can define from one to four user accounts, each of which may have one of the four possible roles:

- ADMINISTRATOR (default username/password is **admin**), who has full read and write permission.
- INSTALLER (default username/password is **installer**), who has permission to read and write parameters applicable to unit installation and monitoring.
- HOME (default username/password is **home**), who has permission only to access pertinent information for support purposes.
- READONLY (default username/password is **readonly**), who has permission to only view the Monitor page.

SNMP

The management agent supports fault and performance management utilizing an SNMP interface. The management agent is compatible with SNMP v2c using one Management Information Base (MIB) file which is available for download from the Cambium Networks support site: https://support.cambiumnetworks.com/files/epmp.

Network Time Protocol (NTP)

The clock supplies accurate date and time information to the system. It can operate with or without a connection to a network time server (NTP). Local time can be displayed by setting the time zone and daylight saving options on the Time web page.

If an NTP server connection is available, the clock can synchronize with the server time at regular intervals.

ePMP™ devices can receive NTP data from a CMM module or an NTP server configured in the system's management network. The Time Zone option is configurable on the **Configure** > **System** page and can offset the received NTP time to match the operator's local time zone.

Software upgrade

Software upgrades can be issued through the radio web interface (**Tools** > **Software Upgrade**) or cnMaestro (cloud.cambiumnetworks.com). For software upgrades, visit: https://support.cambiumnetworks.com/files/epmp.

Further reading on system management

For more information on system management, refer to Operation and Troubleshooting section.

System Hardware

This chapter describes the site planning and hardware components of an ePMP link.

The following topics are described in this chapter:

- Factors to be considered when planning the proposed network is described under Site planning.
- The power supply hardware, part numbers, and specifications are described in Power supply.
- Cable standards and lengths are described in Ethernet cabling.
- Surge suppression requirements and recommendations are described in Surge suppression unit.

Site planning

Conduct a site survey to ensure that the proposed sites meet the requirements defined in this section.

Site installation

An ePMP site typically consists of a high supporting structure such as a mast, tower, or building for the devices.

Find a location for the device that meets the following requirements:

- The equipment is high enough to achieve the best radio path.
- People can be kept a safe distance away from the equipment when it is radiating.
- The equipment is lower than the top of the supporting structure (tower, mast, or building) or its lightning air terminal.
- There is one Ethernet interface, a copper Cat5e connection from the device to the power supply, and network terminating equipment.

Grounding and lightning protection

Structures, equipment, and people must be protected against power surges (typically caused by lightning) by conducting the surge current to the ground through a separate preferential solid path. The actual degree of protection required depends on local conditions and applicable local regulations. To adequately protect an ePMP installation, both ground bonding and transient voltage surge suppression are required.

Warning

Electro-magnetic discharge (lightning) damage is not covered under warranty. The recommendations in this guide, when followed correctly, give the user the best protection from the harmful effects of EMD. However, 100 percent protection is neither implied nor possible.

Details of lightning protection methods and requirements can be found in the international standards IEC 61024-1 and IEC 61312-1, the U.S. National Electric Code ANSI/NFPA No. 70-1984, or section 54 of the Canadian Electric Code.

Note

International and national standards take precedence over the requirements in this guide.

Figure 2: *Access Point installation diagram*

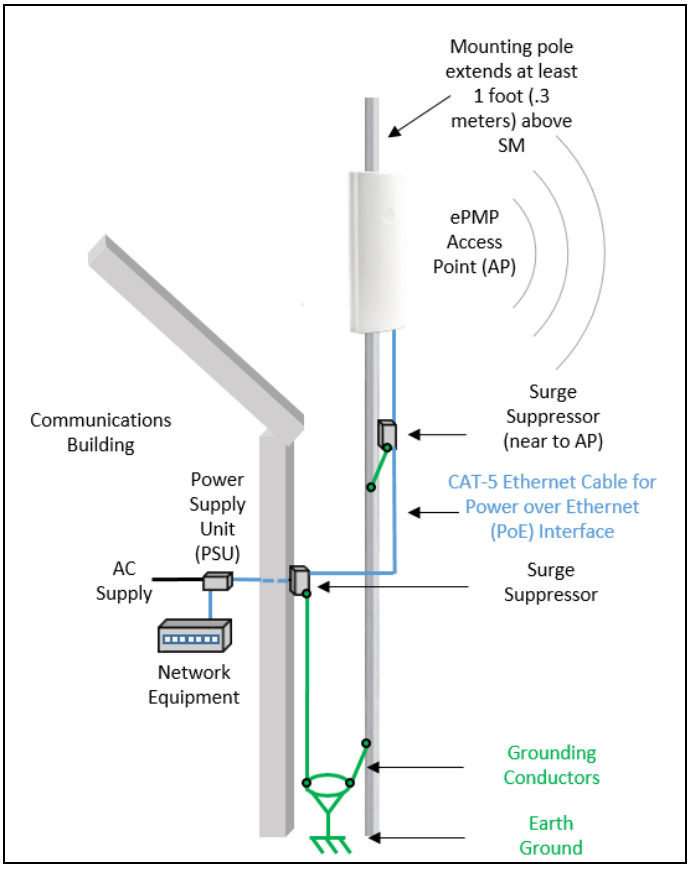

Figure 3: *Subscriber / Point-to-Point installation diagram*

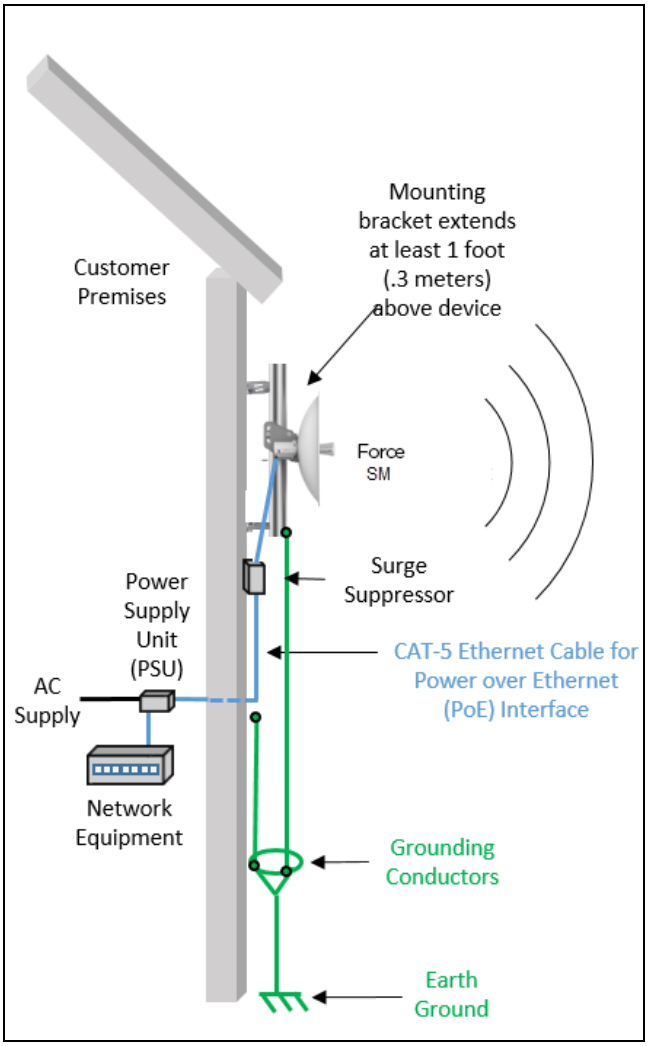

Lightning protection zones

Use the rolling sphere method as shown in Figure 4 to determine where it is safe to mount the equipment. An imaginary sphere, typically 50 meters in radius, is rolled over the structure. Where the sphere rests against the ground and a strike termination device (such as a finial or ground bar), all the space under the sphere is considered to be in the zone of protection (Zone B). Similarly, where the sphere rests on two finials, the space under the sphere is considered to be in the zone of protection.

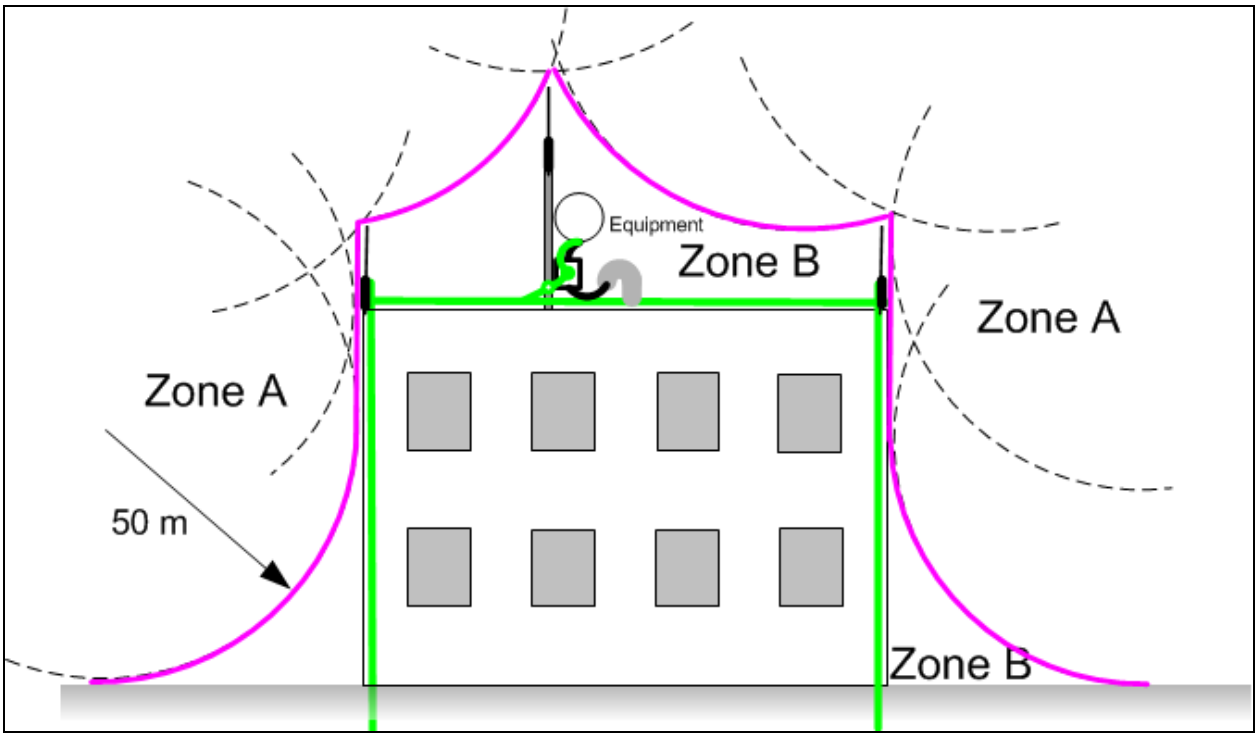

Figure 4: *Rolling sphere method to determine the lightning protection zones*

Assess locations on masts, towers, and buildings to determine if the location is in Zone A or Zone B:

- **Zone A**: In this zone a direct lightning strike is possible. Do not mount the equipment in this zone.
- **Zone B**: In this zone, direct EMD (lightning) effects are still possible, but mounting the equipment in this zone significantly reduces the possibility of a direct strike. Mount the equipment in this zone.

Warning

Do not mount the equipment in Zone A. Mounting the equipment in Zone A poses risk to the equipment, structures, and human lives.

Electromagnetic Compatibility (EMC) compliance

ePMP complies with European EMC Specification EN301 489-1 with testing carried out to the detailed requirements of EN 301 489-17.

The EMC specification type approvals that is granted for ePMP are listed under Table 2.

Table 2: EMC emissions compliance

Region	Specification (Type Approvals)
USA	FCC CFR 47 Part 15 class B
Canada	RSS-210 RSS-247
Europe	ETSI EN 301 489-1 ETSI EN 301 489-17

ePMP 5 GHz Force 4518 SM

For details of the Force 4518 hardware, see:

- ePMP 5 GHz Force 4518 SM integrated description
- ePMP 5 GHz Force 4518 SM part numbers
- ePMP 5 GHz Force 4518 SM interfaces
- ePMP 5 GHz Force 4518 SM specifications
- ePMP 5 GHz Force 4518 SM heater
- ePMP 5 GHz Force 4518 SM wind loading
- ePMP 5 GHz Force 4518 SM software packages

Integrated description

The ePMP 5 GHz Force 4518 SM provides high-capacity, low-latency broadband with MU-MIMO support, 1024QAM, and advanced QoS for versatile applications.

ePMP 5 GHz Force 4518 SM is shown in Figure 5.

Figure 5: *ePMP 5 GHz Force 4518 SM integrated*

Part numbers

Select the correct regional variant to adhere to local licensing restrictions.

Each of the parts listed includes the following items:

- One integrated unit
- One power supply 1000/100 BASE-TX LAN injector
- One line cord

Table 3: ePMP 5 GHz Force 4518 SM part numbers

Cambiumdescription	Cambium partnumber
ePMP 5 GHz Force 4518 SM Radio (ROW) (no cord)	C050940C031A
ePMP 5 GHz Force 4518 SM Radio (ROW) (US cord)	C050940C131A

Cambiumdescription	Cambium partnumber
ePMP 5 GHz Force 4518 SM Radio (IC) (Canada/US cord)	C058940C134A
ePMP 5 GHz Force 4518 SM Radio (ROW) (EU cord)	C050940C231A
ePMP 5 GHz Force 4518 SM Radio (EU) (EU cord)	C050940C233A
ePMP 5 GHz Force 4518 SM Radio (ROW) (UK cord)	C050940C331A
ePMP 5 GHz Force 4518 SM Radio (EU) (UK cord)	C050940C333A
ePMP 5 GHz Force 4518 SM Radio (ROW) (India cord)	C050940C431A
ePMP 5 GHz Force 4518 SM Radio (India) (India Cord)	C050940C435A
ePMP 5 GHz Force 4518 SM Radio (ROW) (China cord)	C050940C531A
ePMP 5 GHz Force 4518 SM Radio (ROW) (Brazil cord)	C050940C631A
ePMP 5 GHz Force 4518 SM Radio (ROW) (Argentina cord)	C050940C731A
ePMP 5 GHz Force 4518 SM Radio (ROW) (ANZ cord)	C050940C831A
ePMP 5 GHz Force 4518 SM Radio (ROW) (South Africa cord)	C050940C931A
ePMP 5 GHz Force 4518 SM Radio (FCC) (US Cord)	C058940C132A
ePMP 5 GHz Force 4518 SM Radio (Indonesia) (EU Cord)	C050940C236A

Interfaces

The Ethernet port is located on the rear of the integrated unit.

Table 4: ePMP 5 GHz Force 4518 SM series - rear interfaces

Portname	Connector	Interface	Description
Eth	RJ45	PoE input	Power over Ethernet (PoE)
		100/1000BASE-T Ethernet	Data

Specifications

The ePMP 5 GHz Force 4518 SM integrated module conforms to the specifications listed in Table 5 and Table 6.

The integrated module meets the low-level static discharge specifications identified in Electromagnetic compatibility (EMC) compliance and provides internal surge suppression, but does not provide lightning suppression.

Table 5: ePMP 5 GHz Force 4518 SM physical specifications

Category	Specification
Dimensions (Diameter x Depth)	180 mm x 210 mm x 39 mm (7.08 in x 8.27 in. x 1.54 in.)
Weight	2.76 kg (6.1 lbs.)

Table 6: ePMP 5 GHz Force 4518 SM environmental specifications

Category	Specification
Temperature	-30°C to 55°C (-22°F to 131°F)
Wind loading	200 km/hour (124 mph)
Environmental	IP55

Heater

At startup, if the ePMP 5 GHz Force 4518 SM module temperature is at or below 32°F (0°C), an internal heater is activated to ensure that the device can successfully begin operation. The unit's heater is only activated when the unit is powered on and will not apply heat to the device once the startup is complete. When the unit temperature is greater than 32°F (0°C), the heater is deactivated and the unit continues its start-up sequence.

The effect on device start-up time at various temperatures is defined in Table 7.

Table 7: ePMP 5 GHz Force 4518 SM startup times based on ambient temperature

Initial Temperature	Startup time (from power on to operational)
-22°F (-30°C) H	20 minutes
-4°F (-20°C)	6 minutes
14°F (-10°C)	2 minutes, 30 seconds

Wind loading

Ensure that the device and the structure on which it is mounted are capable of withstanding the prevalent wind speeds at a proposed ePMP site. Wind speed statistics are available from national meteorological offices.

The device and its mounting bracket are capable of withstanding wind speeds of up to 180 kph (124 mph).

Wind blowing on the device will subject the mounting structure to significant lateral force. The magnitude of the force depends on both wind strength and the surface area of the device. Wind loading is estimated using the following formulae:

Force (in kilograms) = $0.1045aV^2$

Where:	Is:
a	the surface area in square meters
V	wind speed in meters per second

Force (in pounds) = $0.0042Av^2$

Where:	Is:
A	the surface area in square feet
v	wind speed in miles per hour

Installation

> **Note**
>
> A professional installation is required.

Package contents

Figure 6 shows the package contents for ePMP 5 GHz Force 4518 SM.

Figure 6: *ePMP 5 GHz Force 4518 SM - Package contents*

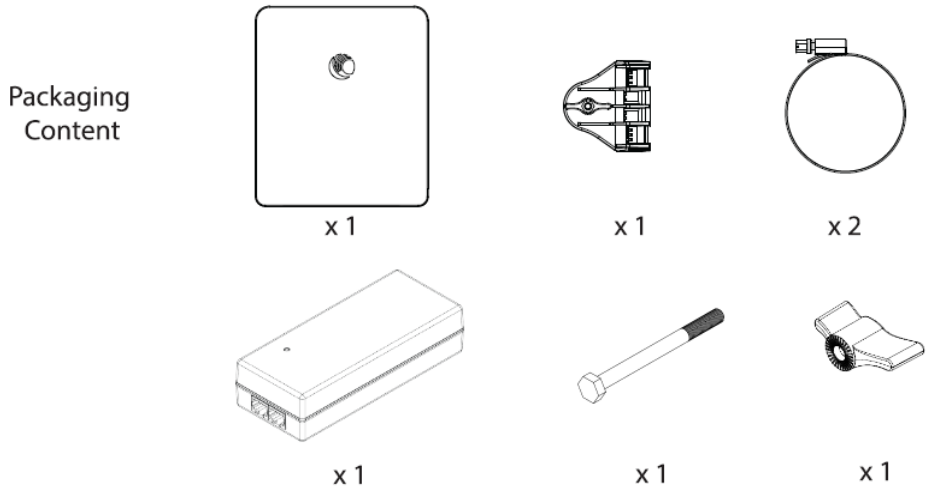

Installing ePMP 5 GHz Force 4518 SM

To install ePMP 5 GHz Force 4518 SM, perform the following steps:

1. Attach the rear pole bracket to the antenna bracket and secure them together using an M6 x L80 nut. Tighten the assembly with the knob.

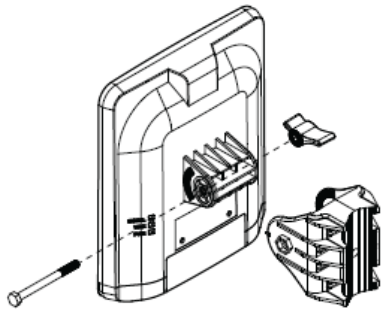

2. Assemble the antenna hose clamp with the rear pole bracket and secure it with an M8 nut, tightening to 9 Nm.

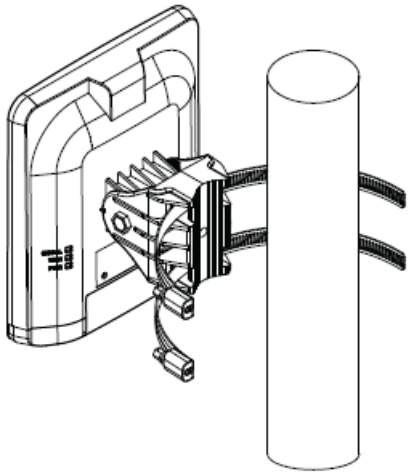

3. Insert the cables into the ports.

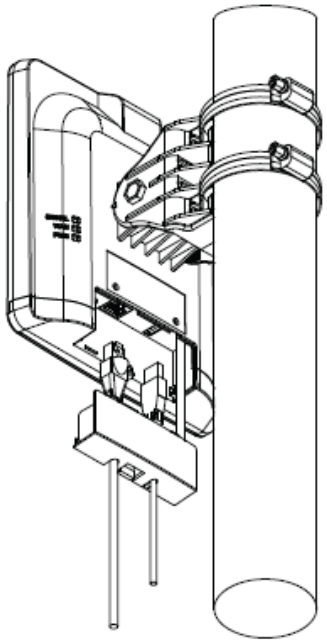

4. The intent of the angle adjustment is for the installer to maintain zero degrees at the bore sight.

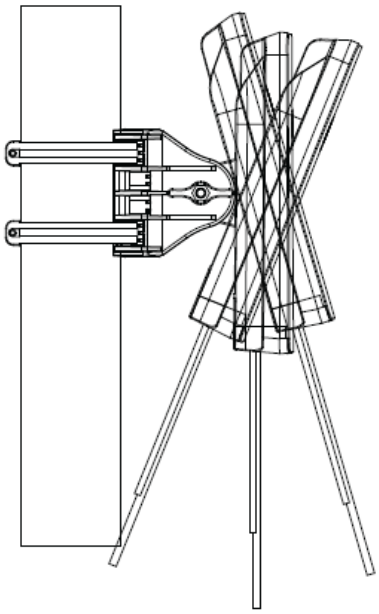

Software packages

ePMP 5 GHz Force 4518 SM devices can be upgraded by downloading new software packages from the Cambium Networks site or by using cnMaestro. The software packages applicable to ePMP integrated radios are named:

- ePMP-AX-v5.x.x.img (or higher version number)

Power supply

For details of the ePMP power supply units, see:

- Power supply description
- Power supply part numbers
- Power supply interfaces
- Power supply specifications
- Power supply location considerations

Power supply description

The power supply unit that is connected to the ePMP modules is rated for indoor use. The ePMP modules are installed outdoors and terminated to network equipment using Cat5e cables with RJ45 connectors. The Cat5e cables are plugged into an AC or DC power supply to inject Power over Ethernet (PoE) into the module. The Cat5e cables connected to the power supply transitioning from indoors to outdoors must be rated for outdoor use.

Attention

All RJ45 Ethernet LAN cables used for providing power or are connected to power ports (PoE) must be UL certified with VW-1 markings.

Power supply part numbers

Each module requires one power supply and one power supply line cord (line cord included with radio device, refer to Table 8.

Table 8: Power supply part numbers

Cambium description	Cambium part number	Device Compatibility
POWER SUPPLY, 13W, 30V - Gbps support	N000000L034	ePMP Access Point

Attention

Each ePMP device must be powered by the corresponding power supply listed in Table 8. This product is intended to be supplied by a UL Listed and IEC certified Power Supply Unit marked **LPS** or **PS2** and providing power over the Ethernet (PoE) supply.

Power supply interfaces

The power supply interfaces are illustrated in Figure 7 and described in Table 9 and .

Figure 7: *Power supply interfaces*

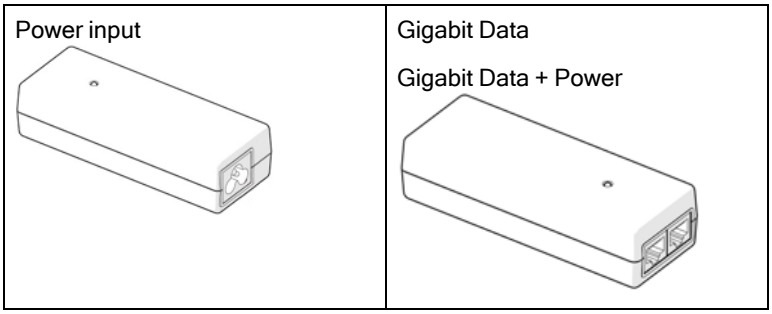

Table 9: Power supply interface functions

Interface	Function
Power input	Mains power input.
Power output	30V
Gigabit Data + Power	RJ45 socket for connecting Cat5e cable to the radio. **Note:** All RJ45 Ethernet LAN cables used for providing power or are connected to power ports (PoE) must be UL certified with VW-1 markings.
Gigabit Data	RJ45 socket for connecting Cat5e cable to the network.

Table 10: Power Supply LED functions

LED	Function
Power (Green)	Power supply detection

Power supply specifications

The ePMP power supply conforms to the specifications listed in Table 11, Table 12, and Table 13.

Table 11: Power supply physical specifications

Category	Specification
Dimensions (H x W x D)	14 x 6.5 x 3.6 cm (5.5 x 2.55 x 1.42 in)
Weight	0.26 lbs

Table 12: Power supply environmental specifications

Category	Specification
Ambient Operating Temperature	0°C to +40°C
Humidity	20% - 90%

Table 13: Power supply electrical specifications

Category	Specification
AC Input	100 to 240 VAC
Efficiency	Meets Energy Level 6
Over Current Protection	Short circuit, with auto-recovery
Hold uptime	10 ms minimum at maximum load, 120 VAC

Power supply location considerations

Find a location for the power supply that meets the following requirements:

- The power supply is rated for indoor use and can be mounted on a wall or other flat surface.
- The power supply must be kept dry, with no possibility of condensation, flooding, or rising dampness.
- The power supply can be accessed to view status indicators.
- The power supply can be connected to the ePMP module drop cable and network terminating equipment.
- The power supply can be connected to a mains or DC power supply that meets the requirements defined in Table 13.

Ethernet cabling

For more information on the Ethernet cabling components of an ePMP installation, see:

- Ethernet standards and cable lengths
- Outdoor Cat5e cable

Ethernet standards and cable lengths

All configurations require a copper Ethernet connection from the power supply port to the power supply and network terminating equipment.

Attention

All cables used for outdoor installations must be suitable to be used for that environment and rated accordingly.

For each power supply, the maximum permitted drop cable length is specified in Table 14.

Table 14: Power supply drop cable length restrictions

Part number	Description	Maximum cable length (*1)
N000900L001A	Power Supply for Radio with Gigabit Ethernet (no cord)	330 feet (100m)

(*1) The maximum length of Ethernet cable from the device to the network device needs to follow standards. If the power supply is not the network device the cable from the power supply to the network device must be included in the total maximum cable length.

Outdoor Cat5e cable

Cambium Industrial Cable

Cambium Industrial Cable uses 24-gauge solid bare copper conductors, covered by bonded-pair polymer insulation. The conductors are protected by double-layer shielding consisting of a solid foil layer under the braided tinned copper mesh, providing excellent shielding while maximizing flexibility. The cable is jacketed by industrial-grade UV-resistant, abrasion-resistant, and oil-resistant PVC.

Cambium's Industrial RJ45 connectors are specifically designed to work optimally with Cambium Industrial Cable.

The connectors are fully shielded with integrated strain relief for greater pull strength, utilize a staggered contact design that minimizes crosstalk, and maximizes electrical performance, and the contacts are plated with 50 micro-inch thick 24-carat gold, exceeding TIA-1096 specifications and ensuring the best possible connection and oxidation resistance.

Industrial-grade cable by Cambium Networks is well suited for high-quality durable installations of subscriber modules, APs, and enterprise point-to-point links and in tactical non-permanent deployments of infrastructure.

Table 15: Cambium Industrial Cable part numbers

Cambium description	Cambium part number
Industrial Grade CAT 5 Cable 50 meter unterminated	N000000L106A
Industrial Grade CAT 5 Cable 100 meter unterminated	N000000L106A
Industrial Grade CAT 5 Cable 300 meter unterminated	N000000L108A
Industrial Grade RJ45 Connector 100 Pack	C000000L109A
Termination Tool for C000000L109A RJ45 connectors	C000000L110A

Attention

All RJ45 Ethernet LAN cables used for providing power or are connected to power ports (PoE) must be UL certified with VW-1 markings.

Surge suppression unit

Structures, equipment, and people must be protected against power surges (typically caused by lightning) by conducting the surge current to the ground via a separate preferential solid path.

The actual degree of protection required depends on local conditions and applicable local regulations. To adequately protect an ePMP installation, both ground bonding and transient voltage surge suppression are required.

Network operators should always follow best practices for grounding and lightning protection. Doing so will minimize network outages and reduce the associated costs of tower climbs and equipment repair/replacement.

Note

Lightning-prone installations can be improved by:

- Installing a surge suppressor near the device (transient surge suppression)
- Grounding the device to the pole (ground bonding)
- Lowering the device/dish such that it is not the highest metallic object on the pole.

Gigabit Ethernet Surge Suppressor

The Gigabit Ethernet surge suppressor is critical for lightning protection to minimize the potential for damage.

Figure 8: *Gigabit Ethernet Surge Suppressor*

Table 16: Surge suppressor part numbers

Cambium description	Cambium part number	Device Compatibility
Gigabit Surge Suppressor (56V)	C000000L033A	ePMP Access Points

Attention

Choose the 56V surge suppressor option based on your installed device power rating. Installing a 30V surge suppressor for a 56V device or a 56V surge suppressor for a 30V device may result in inadequate surge protection. For more details, refer to Table 16.

Regulatory Information

This section describes planning of the ePMP links to conform to the regulatory restrictions that apply in the country of operation.

Attention

The user must ensure the ePMP product operates in accordance with local regulatory limits.

Note

Contact the applicable radio regulator to check if the registration of the ePMP link is required.

General wireless specifications

The wireless specifications that apply to ePMP 802.11AX variants are listed under Table 17. The wireless specifications that are specific to each frequency variant are listed in Table 18.

Table 17: Wireless specifications (all variants)

Item	Specification
Channel selection	Manual selection (fixed frequency) Automatic Channel Selection
Manual power control	To avoid interference with other users of the band, maximum power can be set lower than the default power limit.
Maximum transmit power	+3 to +28 dBm (combined, to regional EIRP limit)
Duplex scheme	Adaptive TDD
Over-the-air encryption	AES
Error Correction	FEC

Table 18: Wireless specifications, 5 GHz band

Item	5 GHz
RF band (GHz)	5150 - 5920 MHz
Channel bandwidth	20 MHz, 40 MHz, or 80 MHz
Typical antenna gain	Integrated dish antenna 18 dBm
Antenna 3 dB Beamwidth	15°

Regulatory limits

The local regulator may restrict frequency usage and channel width and may limit the amount of conducted or radiated transmitter power.

Many countries impose EIRP limits (allowed EIRP) on products operating in the bands used by the ePMP Series. For example, in the 5 GHz band in Europe, these limits are calculated as follows:

- In the 5.8 GHz band (5725 MHz to 5875 MHz), the EIRP must not exceed the lesser of 36 dBm or (23 + 10 x Log Channel width in MHz) dBm.

Some countries (for example the USA) impose conducted power limits on products operating in the 5 GHz band.

Conforming to the limits

Ensure the link is configured to conform to the local regulatory requirements by configuring the correct country code (located in the web management interface, under **Configure** > **Radio**). In the following situations, the country code does not prevent the operation automatically outside the regulations:

- When operating in ETSI regions, it is required to enter a license key in the ePMP web management interface to unlock valid country-specific frequencies. This key can be obtained from https://support.cambiumnetworks.com/licensekeys/epmp.

Available spectrum

The available spectrum for the operation depends on the region. When configured with the appropriate country code, the unit allows operation on those channels only which are permitted by the regulations.

Certain regulations have allocated certain channels as unavailable for use:

- Some European countries have allocated, part of the 5.8 GHz band to Road Transport and Traffic Telematics (RTTT) systems.

Where regulatory restrictions apply to certain channels, these channels are barred automatically by the use of the correct country code. For example, at 5.8 GHz in some European countries, the RTTT band 5795 MHz to 5815 MHz is barred. With the appropriate country code configured for this region, the ePMP does not operate on channels within this band.

The number and identity of channels barred by the license key and country code are dependent on the channel bandwidth.

Channel bandwidth

Select the required channel bandwidth for the link. The selection depends on the ePMP frequency variant and country code.

The wider a channel bandwidth the greater is its capacity. As narrower channel bandwidths take up less spectrum, selecting a narrow channel bandwidth may be a better choice when operating in locations where the spectrum is very busy.

Both ends of the link must be configured to operate on the same channel bandwidth.

Electromagnetic Compatibility (EMC) compliance

ePMP complies with European EMC Specification EN301 489-1 with testing carried out to the detailed requirements of EN 301 489-17.

The EMC specification type approvals that is granted for ePMP are listed under Table 19.

Table 19: EMC emissions compliance

Region	Specification (Type Approvals)
USA	FCC CFR 47 Part 15 class B
Canada	RSS-210 RSS-247
Europe	ETSI EN 301 489-1 ETSI EN 301 489-17

Compliance with safety standards

This section lists the safety specifications against which the ePMP is tested and certified. ePMP complies with global Electrical Safety specifications, primarily IEC 62368-1, IEC 60950-22, UL 62368-1, UL 60950-22.

For RF exposure limits, ePMP 5 GHz Force 4518 SM has a safe distance of 20 cm in USA, 65 cm in Europe, and 20 cm in Canada.

Cambium Networks complies with the European Regulation 2023/988 of 10 May 2023 on General Product Safety. EU Authorized Representative: Cambium Networks Europe B.V., Muiderstraat 1, 1011PZ Amsterdam, Netherlands. Contact Information: GPSR@cambiumnetworks.com.

Glossary

Term	Definition
AES	Advanced Encryption Standard
ANSI	American National Standards Institute
CINR	Carrier to Interference plus Noise Ratio
CMM	Cluster Management Module
DFS	Dynamic Frequency Selection
EIRP	Equivalent Isotropically Radiated Power
EMC	Electromagnetic Compatibility
EMD	Electromagnetic Discharge
ETH	Ethernet
ETSI	European Telecommunications Standards Institute
FCC	Federal Communications Commission
FEC	Forward Error Correction
GUI	Graphical User Interface
HTTP	Hypertext Transfer Protocol
IC	Industry Canada
IEEE	Institute of Electrical and Electronics Engineers
IP	Internet Protocol
LAN	Local Area Network
LED	Light Emitting Diode
LoS	Line of Sight
MIMO	Multiple In Multiple Out
MIR	Maximum Information Rate
MU-MIMO	Multi-User Multiple In Multiple Out
MTU	Maximum Transmission Unit
nLOS	Near Line of Sight
NTP	Network Time Protocol
OFDM	Orthogonal Frequency Division Multiplexing
PC	Personal Computer
PMP	Point to Multipoint
PTP	Point to Point

Term	Definition
QAM	Quadrature Amplitude Modulation
QPSK	Quadrature Phase Shift Keyed
RF	Radio Frequency
RMA	Return Merchandise Authorization
RSSI	Received Signal Strength Indication
RTTT	Road Transport and Traffic Telematics
RX	Receive
SAR	Standard Absorption Rate
SNMP	Simple Network Management Protocol
SW	Software
TDD	Time Division Duplex
TDWR	Terminal Doppler Weather Radar
TX	Transmit
UNII	Unlicensed National Information Infrastructure
URL	Uniform Resource Locator

Cambium Networks

Cambium Networks delivers wireless communications that work for businesses, communities, and cities worldwide. Millions of our radios are deployed to connect people, places and things with a unified wireless fabric that spans multiple standards and frequencies of fixed wireless and Wi-Fi, all managed centrally via the cloud. Our multi-gigabit wireless fabric offers a compelling value proposition over traditional fiber and alternative wireless solutions. We work with our Cambium certified ConnectedPartners to deliver purpose-built networks for service provider, enterprise, industrial, and government connectivity solutions in urban, suburban, and rural environments, with wireless that just works.

User Guides	http://www.cambiumnetworks.com/guides
Technical training	https://learning.cambiumnetworks.com/learn
Support website (enquiries)	https://support.cambiumnetworks.com
Main website	http://www.cambiumnetworks.com
Sales enquiries	solutions@cambiumnetworks.com
Warranty	https://www.cambiumnetworks.com/support/standard-warranty/
Telephone number list	http://www.cambiumnetworks.com/contact-us/
Address	Cambium Networks Limited, Unit B2, Linhay Business Park, Eastern Road, Ashburton, Devon, TQ13 7UP United Kingdom

Cambium Networks™ www.cambiumnetworks.com

Cambium Networks and the stylized circular logo are trademarks of Cambium Networks, Ltd. All other trademarks are the property of their respective owners.

© Copyright 2024 Cambium Networks, Ltd. All rights reserved.