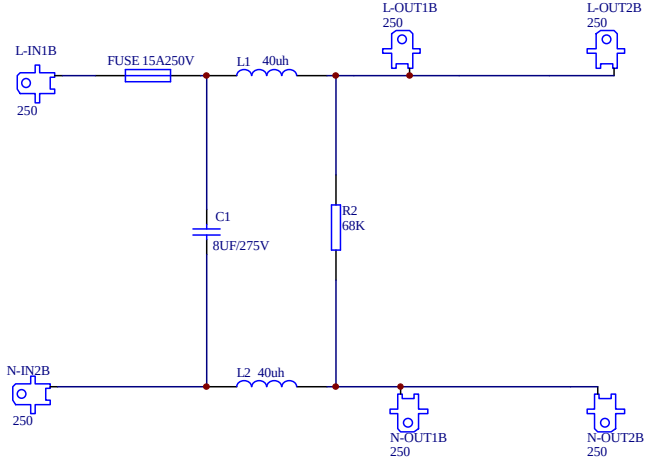

Company:	YLS				
Drawing	Heyaoran	Title:	C-PP-2		
Audit					
Approva		Date:	2012.10.08	REV:	00

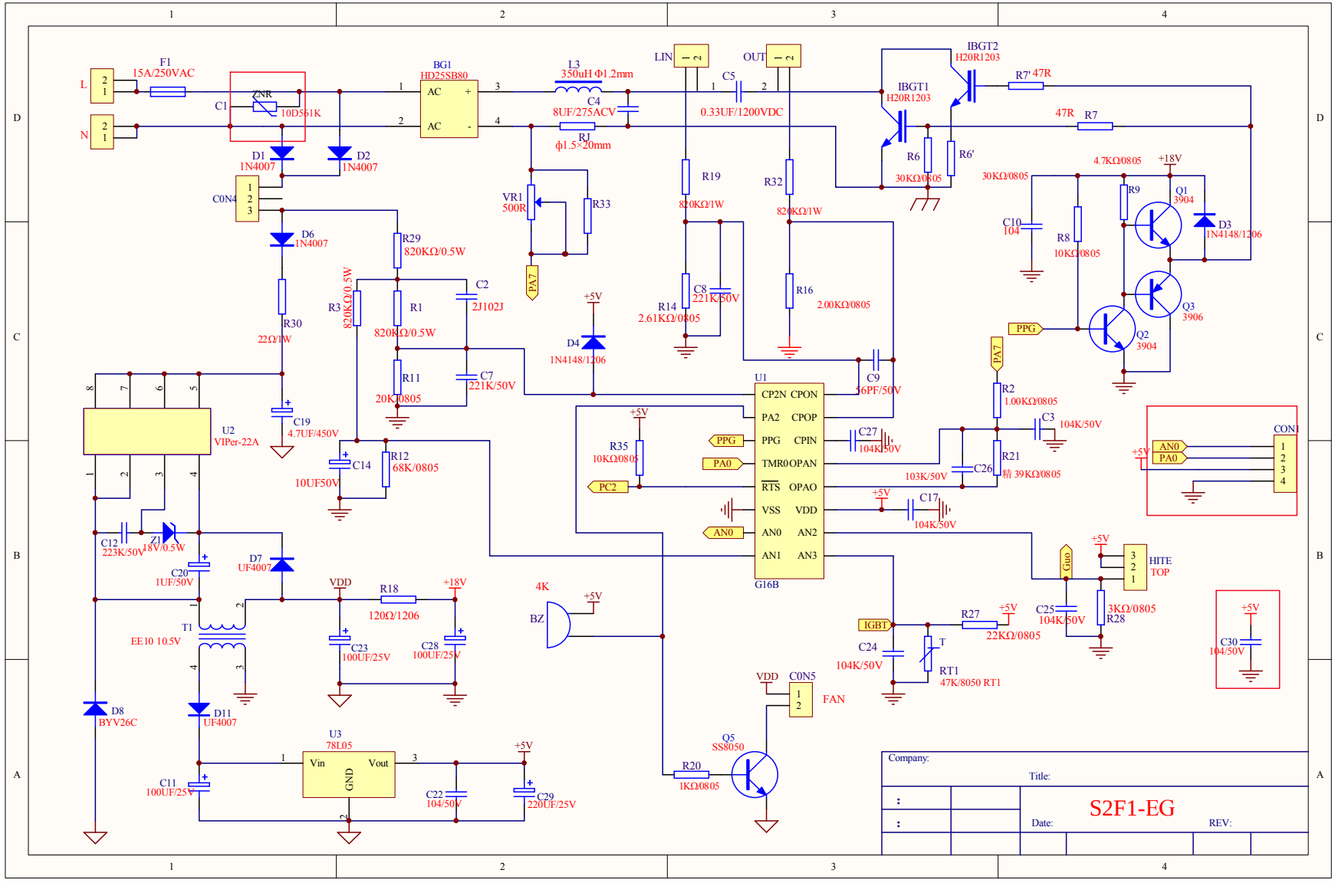
L
N
F1
15A/250VAC
C1
ZNR
10D561K
D1
1N4007
D2
1N4007
C0N4
D6
1N4007
R30
22Ω/1W
C19
4.7UF/450V
U2
VIPer-22A
C12
223K/50V
Z1
18V/0.5W
C20
1UF/50V
D7
UF4007
T1
EE10 10.5V
D8
BYV26C
D11
UF4007
C11
100UF/25V
BG1
HD25SB80
AC
AC
R29
820KΩ/0.5W
R3
820KΩ/0.5W
R1
820KΩ/0.5W
C2
2J102J
R11
20KΩ/0805
C7
221K/50V
C14
10UF50V
R12
68K/0805
VDD
R18
120Ω/1206
+18V
C23
100UF/25V
C28
100UF/25V
U3
78L05
Vin
Vout
GND
C22
104/50V
C29
220UF/25V
L3
350uH Φ1.2mm
C4
8UF/275ACV
RJ
φ1.5×20mm
VR1
500R
R33
PA7
D4
1N4148/1206
LIN
OUT
C5
0.33UF/1200VDC
R19
820KΩ/1W
R32
820KΩ/1W
C8
221K/50V
R14
2.61KΩ/0805
R16
2.00KΩ/0805
C9
56PF/50V
U1
CP2N
CPON
PA2
CPOP
PPG
CPIN
TMR0
OPAN
RTS
OPAO
VSS
VDD
AN0
AN2
AN1
AN3
G16B
R35
10KΩ/0805
PC2
C27
104K/50V
C17
104K/50V
4K
BZ
IGBT
R27
22KΩ/0805
C24
104K/50V
RT1
47K/8050 RT1
VDD
C0N5
FAN
Q5
SS8050
R20
1KΩ/0805
IBGT2
H20R1203
IBGT1
H20R1203
R7'
47R
47R
R7
R6
30KΩ/0805
R6'
30KΩ/0805
4.7KΩ/0805
+18V
R9
Q1
3904
D3
1N4148/1206
C10
104
R8
10KΩ/0805
Q3
3906
Q2
3904
PPG
PA7
R2
1.00KΩ/0805
C3
104K/50V
C26
103K/50V
R21
精 39KΩ/0805
CON1
AN0
PA0
Guo
HITE
TOP
C25
104K/50V
R28
3KΩ/0805
C30
104/50V
Company:
Title:
S2F1-EG
Date:
REV: