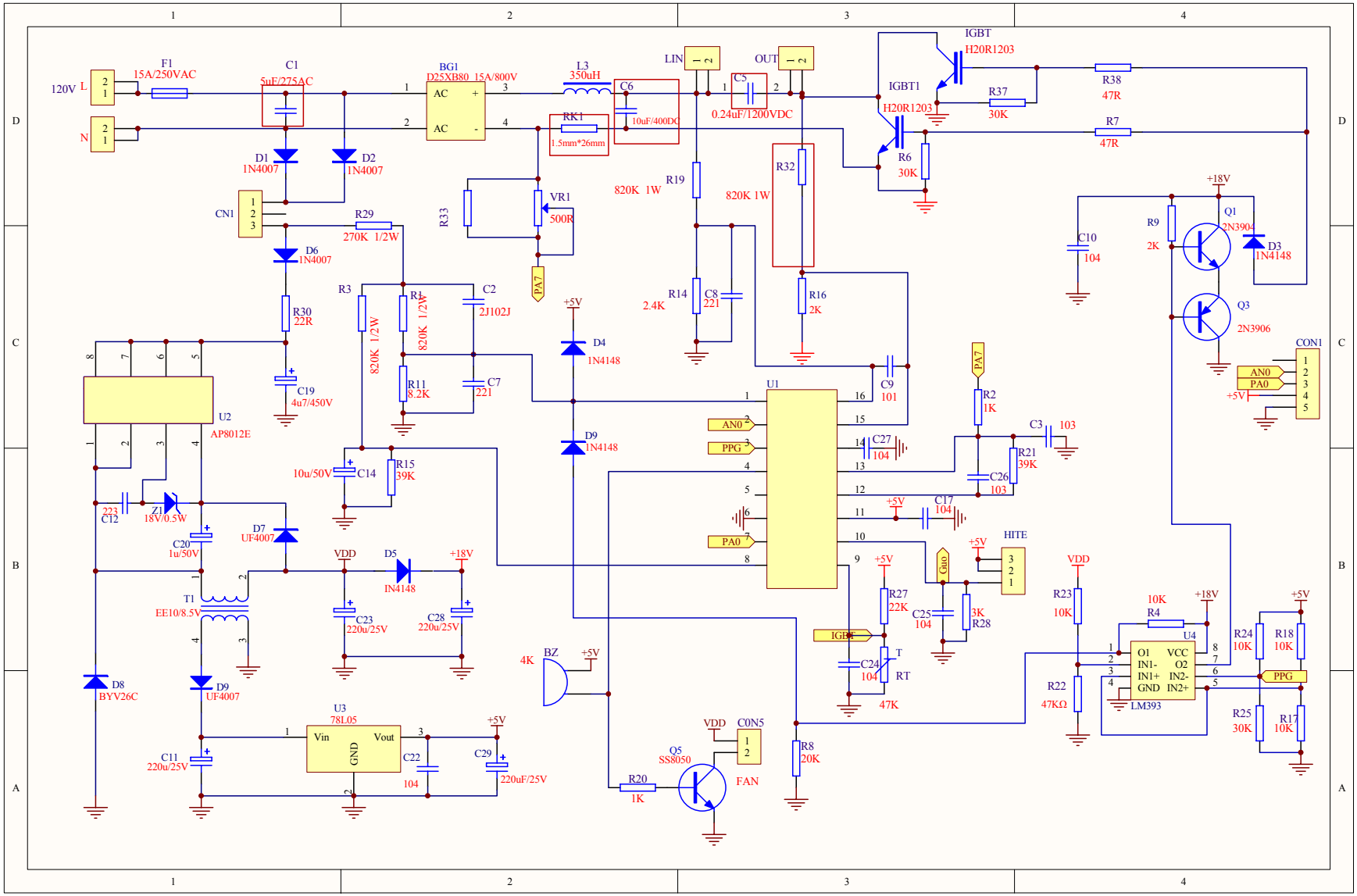
120V
L
N
F1
15A/250VAC
C1
5uF/275AC
BG1
D25XB80 15A/800V
AC
AC
+
-
L3
350uH
C6
10uF/400DC
RK1
1.5mm*26mm
LIN
OUT
C5
0.24uF/1200VDC
IGBT
H20R1203
IGBT1
H20R1203
R38
47R
R37
30K
R7
47R
R6
30K
D1
1N4007
D2
1N4007
CN1
R29
270K 1/2W
D6
1N4007
R30
22R
C19
4u7/450V
U2
AP8012E
R33
VR1
500R
PA7
R19
820K 1W
R32
820K 1W
R14
2.4K
C8
221
R16
2K
C10
104
R9
2K
Q1
2N3904
D3
1N4148
Q3
2N3906
+18V
R3
820K 1/2W
R1
820K 1/2W
C2
2J102J
R11
8.2K
C7
221
+5V
D4
1N4148
D9
1N4148
C9
101
U1
AN0
PPG
PA0
R2
1K
C3
103
C27
104
R21
39K
C26
103
C17
104
CON1
AN0
PA0
+5V
C14
10u/50V
R15
39K
223
C12
Z1
18V/0.5W
C20
1u/50V
D7
UF4007
T1
EE10/8.5V
VDD
D5
IN4148
+18V
C23
220u/25V
C28
220u/25V
D8
BYV26C
D9
UF4007
U3
78L05
Vin
Vout
GND
C11
220u/25V
C22
104
C29
220uF/25V
BZ
4K
HITE
R27
22K
C25
104
3K
R28
IGBT
C24
104
T
RT
47K
Guo
R23
10K
R22
47KΩ
R4
10K
U4
LM393
O1
IN1-
IN1+
GND
VCC
O2
IN2-
IN2+
R24
10K
R18
10K
R25
30K
R17
10K
PPG
Q5
SS8050
VDD
C0N5
FAN
R20
1K
R8
20K

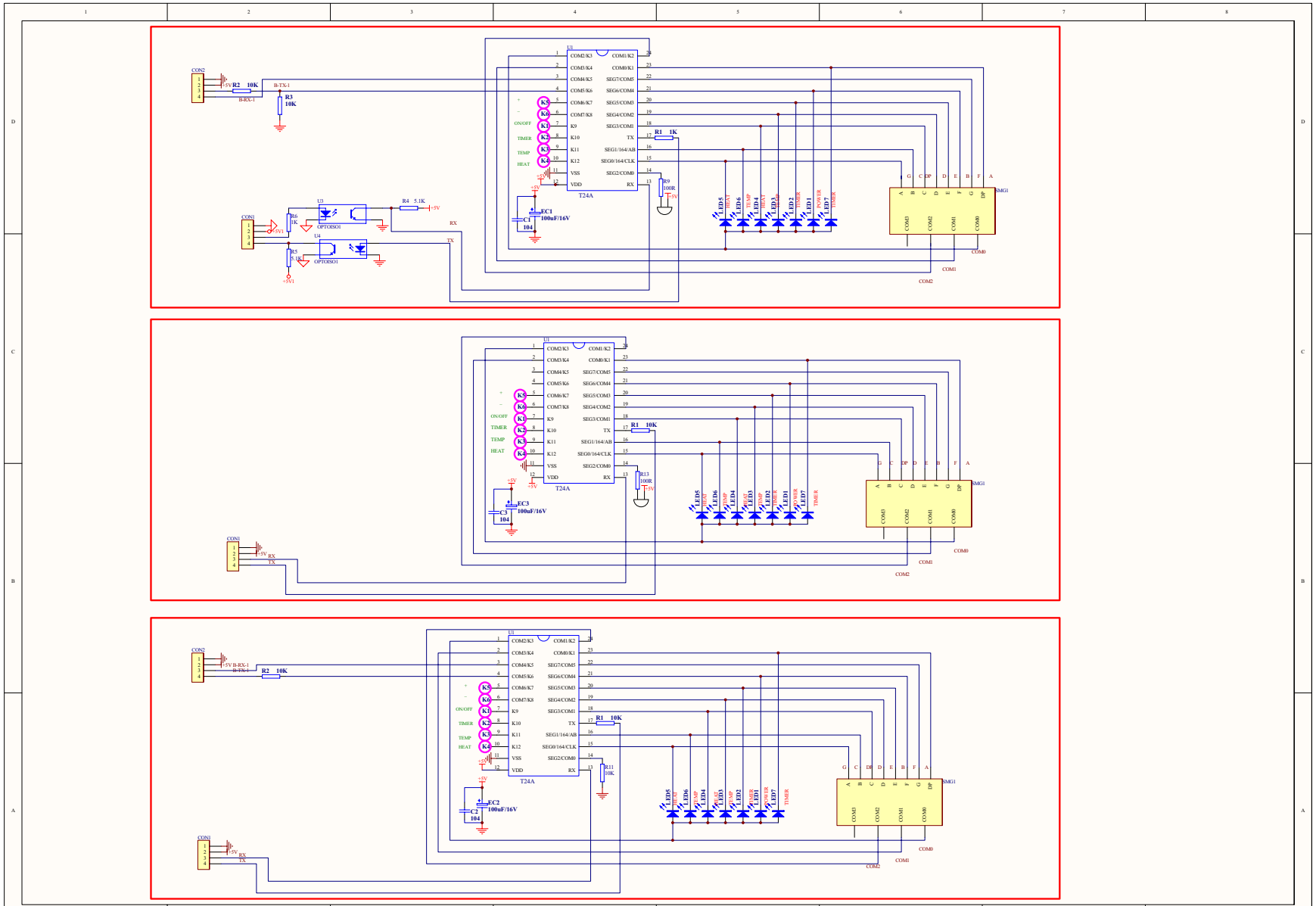
CON2
CON1
R2 10K
R3 10K
R1 1K
R1 10K
R4 5.1K
R6 1K
R7 5.1K
U3
U4
OPTOISO1
U1
T24A
EC1 100uF/16V
EC2 100uF/16V
EC3 100uF/16V
C1 104
C2 104
C3 104
R9 100R
R13 100R
R11 10K
K5
K6
K1
K2
K3
K4
ON/OFF
TIMER
TEMP
HEAT
LED5
LED6
LED4
LED3
LED2
LED1
LED7
SMG1
COM3
COM2
COM1
COM0
B-TX-1
B-RX-1
RX
TX