TEST REPORT

REPORT NUMBER: B15X50225-FCC-RF_Rev1

ON

Type of Equipment: Mobile Phone
Type of Designation: U100
Manufacturer: Shenzhen fortuneship technology.,LTD

ACCORDING TO

FCC CFR Part 2, FREQUENCY ALLOCATIONS AND RADIO TREATY MATTERS; GENERAL RULES AND REGULATIONS; e-CFR, Mar 17, 2015
PART 22, PUBLIC MOBILE SERVICES , e-CFR, Mar 17, 2015
PART 24, PERSONAL COMMUNICATIONS SERVICES, e-CFR, Mar 17, 2015
KDB971168 D01 Power Meas License Digital Systems v02r01, June 7, 2013

China Telecommunication Technology Labs.

Month date, year
Jul, 26, 2015

Signature

He Guili
Director

FCC ID: ZC4U100

Report Date: 2015-07-26

Test Firm Name: China Telecommunication Technology Labs

Registration Number: 840587

Statement

The measurements shown in this report were made in accordance with the procedures described on test pages. All reported tests were carried out on a sample equipment to demonstrate limited compliance with FCC CFR 47 Parts 2, 22, 24. The sample tested was found to comply with the requirements defined in the applied rules.

CTTL Test Report

CONTENTS

1 GENERAL INFORMATION 4

1.1 NOTES 4
1.2 TESTERS 5
1.3 TESTING LABORATORY INFORMATION 6
1.4 DETAILS OF APPLICANT OR MANUFACTURER 7

2 TEST ITEM 8

2.1 GENERAL INFORMATION 8
2.2 OUTLINE OF EUT 8
2.3 MODIFICATIONS INCORPORATED IN EUT 8
2.4 EQUIPMENT CONFIGURATION 8
2.5 OTHER INFORMATION 8

3 SUMMARY OF TEST RESULTS 9

4 TEST RESULTS 10

4.1 RADIATED SPURIOUS EMISSION 10
4.2 OCCUPIED BANDWIDTH 14
4.3 FREQUENCY STABILITY OVER TEMPERATURE VARIATION 19
4.4 FREQUENCY STABILITY OVER VOLTAGE VARIATION 21
4.5 CONDUCTED RF POWER OUTPUT 22
4.6 CONDUCTED SPURIOUS EMISSION 24
4.7 BAND EDGE 35
4.8 ERP AND EIRP 39

ANNEX A EXTERNAL PHOTOS 42

ANNEX B INTERNAL PHOTOS 42

ANNEX C DEVIATIONS FROM PRESCRIBED TEST METHODS 42

CTTL Test Report

1 General Information

1.1 Notes

All reported tests were carried out on a sample equipment to demonstrate limited compliance with FCC CFR 47 Parts 2, 22, 24.

The test results of this test report relate exclusively to the item(s) tested as specified in section 2.

The following deviation from, additions to, or exclusions from the test specifications have been made. See Annex C.

China Telecommunication Technology Labs. (CTTL) authorizes the applicant or manufacturer (see section 1.4) to reproduce this report provided, and the test report may only be reproduced or published in full. Reproduction or publication of extracts from the report requires the prior written approval of CTTL Mr. He Guili.

Any use which a third party makes of this report, or any reliance on or decisions to be made based on it, are the responsibility of such third parties. CTTL accepts no responsibility for damages, if any, suffered by any third party as a result of decisions made or actions based on this report.

CTTL Test Report

1.2 Testers

Name: Li Guoqing

Position: Engineer

Department: Department of EMC test

Date: 2015-06-01 to 2015-6-16

Signature: 李国庆

Editor of this test report:

Name: Li Guoqing

Position: Engineer

Department: Department of EMC test

Date: 2015-06-17

Signature: 李国庆

Technical responsibility for area of testing:

Name: Zou Dongyi

Position: Manager

Department: Department of EMC test

Date: 2015-06-17

Signature: 邹东毅

CTTL Test Report

1.3 Testing Laboratory information

1.3.1 Location

Name:	China Telecommunication Technology Labs.
Address:	No. 11, Yue Tan Nan Jie, Xi Cheng District BEIJING P. R. CHINA, 100083
Tel:	+86 10 68094053
Fax:	+86 10 68011404
Email:	emc@chinattl.com

1.3.2 Details of accreditation status

Accredited by:	China National Accreditation Service for Conformity Assessment (CNAS)
Registration number:	CNAS Registration No. CNAS L0570
Standard:	ISO/IEC 17025:2005

1.3.3 Test location, where different from section 1.3.1

Name:	------
Street:	------
City:	------
Country:	------
Telephone:	------
Fax:	------
Postcode:	------

CTTL Test Report

1.4 Details of applicant or manufacturer

1.4.1 Applicant

Name:	Corporativo Lanix S.A. de C.V.
Address:	Carrtera internacional Hermosillo-Nogale Km 8.5
Country:	Mexico
Telephone:	--
Fax:	--
Contact:	Oscar Guzman
Telephone:	6621090811
Email:	Oguzman@lanix.ciim

1.4.2 Manufacturer (if different from applicant in section 1.4.1)

Name:	Shenzhen fortuneship technology,LTD
Address:	6thFloor,KingsonBuilding,NewEnerg Innovation Industrial Park,No.1Chuangsheng Road, Nanshan District, Shenzhen, P.R.China

1.4.3 Manufactory (if different from applicant in section 1.4.1)

Name:	Shenzhen fortuneship technology.,LTD
Address:	6thFloor,KingsonBuilding,NewEnerg Innovation Industrial Park,No.1Chuangsheng Road, Nanshan District, Shenzhen, P.R.China

CTTL Test Report

2 Test Item

2.1 General Information

Manufacturer: Shenzhen fortuneship technology,LTD
Name: Mobile Phone
Model Number: U100
Serial Number: --
Production Status: Product
Receipt date of test item: 2015-05-29

2.2 Outline of EUT

E.U.T. is a GSM850/ PCS1900 bands bands Terminal Equipment with Bluetooth.

2.3 Modifications Incorporated in EUT

The EUT has not been modified from what is described by the brand name and unique type identification stated above.

2.4 Equipment Configuration

Equipment configuration list:

Item	Generic Description	Manufacturer	Type	Serial No.	Remarks
A	Mobile Phone	Shenzhen fortuneship technology.,LTD	U100	--	None
B	Battery	None	None	--	None
C	Adaptor	None	None	--	None

2.5 Other Information

--

CTTL Test Report

3 Summary of Test Results

A brief summary of the tests carried out is shown as following.

GSM/GPRS mode:		
Specification Clause	Name of Test	Result
2.1051, 24.238, 2.1053,22.917	Radiated Spurious Emission	Pass
2.1049,22.917(b), 24.238(b)	Occupied Bandwidth	*Note 1
2.1055,22.355, 24.235	Frequency Stability over Temperature Variation	Pass
2.1055,22.355, 24.235	Frequency Stability over Voltage Variation	Pass
2.1046,22.913(a), 24.232(c)	Conducted RF Power Output	Pass
2.1051,22.917, 24.238	Conducted spurious emissions	Pass
2.1051,24.238, 2.1053, 22.917	Band Edge	Pass
22.913(a), 22.232(b)	ERP and EIRP	Pass
Note 1: No applicable performance criteria.		

Test equipment Used:

Asset Number	Description	Manufacturer	Model Number	Serial Number	Cal Due	State
1	EMI Test Receiver	R&S	ESU26	100367	2016-03-05	Normal
2	Ultra Broadband Antenna	R/S	VULB 9163	vulb9163—544	2015-12-13	Normal
3	Double-Ridged Horn Antenna	R/S	HF907	100357	2015-12-13	Normal
4	Fully-Anechoic Chamber	ETS	FACT3-2	--	2015-08-20	Normal
5	Wireless Connectivity Test Set	R/S	CMW500	152395	2016-01-28	Normal
6	EMI Test Receiver	R/S	ESU40	100350	2016-03-05	Normal
7	Signal Generator	R/S	SMU200	104517	2016-03-05	Normal

CTTL Test Report

4 Test Results

4.1 Radiated Spurious Emission

Specifications:	2.1051, 22.917, 2.1053, 22.917
Date of Tests	2015-06-04-2015-06-16
Test conditions:	Ambient Temperature:15℃-35℃ Relative Humidity:30%-60% Air pressure: 86-106kPa
Operation Mode	TX on, channel 190 and 661 for GSM/GPRS/EGPRS mode.
Test Results:	Pass

Limit Level Construction:
Part 22:
According to Part 22.917(a), i.e., Out of band emissions, the power of any emission outside of the authorized operating frequency ranges must be attenuated below the transmitting power (P) by a factor of at least 43 + 10 log (P) dB, so the limit level is:
P(dBm) – (43 + 10 log(P)) dB= -13dBm
Part 24:
According to Part 24.238 (a), i.e., Out of band emissions, the power of any emission outside of the authorized operating frequency ranges must be attenuated below the transmitting power (P) by a factor of at least 43 + 10 log (P) dB, so the limit level is:
P(dBm) – (43 + 10 log(P)) dB= -13dBm

Test Setup:
The EUT was placed in an anechoic chamber. The Wireless Communications Test Set was used to set the TX channel and power level and modulate the TX signal with different bit patterns.

Test Method:
The measurement method is substitution method accordance with section 2.2.12 of ANSI/TIA-603-C: *Land Mobile FM or PM Communications Equipment Measurement and Performance Standards*.
(a) Connect the equipment as illustrated and measure the spurious emissions as the method as above.

CTTL Test Report

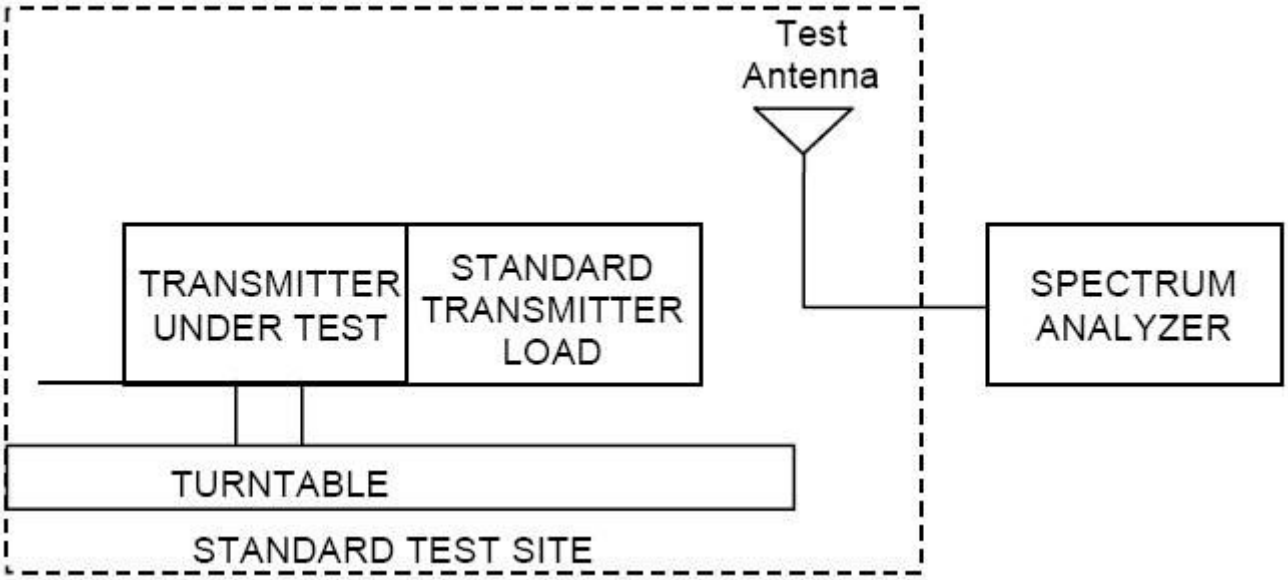

(b) Reconnect the equipment as illustrated.

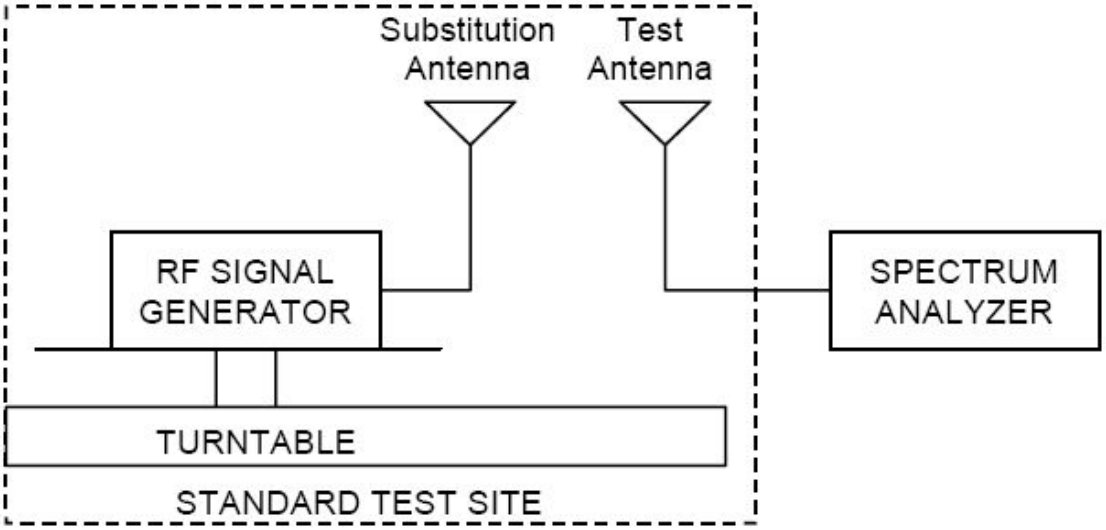

(c) Remove the transmitter and replace it with a substitution antenna. The center of the substitution antenna should be approximately at the same location as the center of the transmitter.

(d) Feed the substitution antenna at the transmitter end with a signal generator connected to the antenna by means of a non-radiating cable. With the antennas at both ends horizontally polarized, and with the signal generator tuned to a particular spurious frequency, raise and lower the test antenna to obtain a maximum reading at the spectrum analyzer. Adjust the level of the signal generator output until the previously recorded maximum reading for this set of conditions is obtained. This should be done carefully repeating the adjustment of the test antenna and generator output.

(e) Repeat step d) with both antennas vertically polarized for each spurious frequency.

(f) Calculate power in dBm into a reference ideal half-wave dipole antenna by

reducing the readings obtained in steps d) and e) by the power loss in the cable between the generator and the antenna, and further corrected for the gain of the substitution antenna used relative to an ideal half-wave dipole antenna by the following formula:

$$P_d(\text{dBm}) = P_g(\text{dBm}) - \textit{cable loss}\ (\text{dB}) + \textit{antenna gain}\ (\text{dB})$$

where:

P_d is the dipole equivalent power and

P_g is the generator output power into the substitution antenna.

CTTL Test Report

Test Data （GSM channel 190 GMSK Mode）

Frequency [MHz]	Generator output power(P_g) [dBm]	Cable loss [dB]	Antenna Gain [dB]	Spurious Emission Power (P_d) [dBm]	Antenna Polarization [H/V]
1672.8	-45.13	4.7	9.4	-40.43	V
2509.2	-43.67	5.9	10.6	-38.97	V
3345.6	-40.14	6.8	12.6	-34.34	V
4182.0	-42.87	7.8	12.6	-38.07	V
5018.4	-41.87	7.5	12.7	-36.67	V
1672.8	-52.21	4.7	9.4	-47.51	H
2509.2	-45.32	5.9	10.6	-40.62	H
3345.6	-50.65	6.8	12.6	-44.85	H
4182.0	-52.45	7.8	12.6	-47.65	H
5018.4	-51.63	7.5	12.7	-46.43	H

Test Data （GSM channel 661 GMSK Mode）

Frequency [MHz]	Generator output power(P_g) [dBm]	Cable loss [dB]	Antenna Gain [dB]	Spurious Emission Power (P_d) [dBm]	Antenna Polarization [H/V]
3760.0	-44.03	7.3	12.6	-38.73	V
5840.0	-56.82	1.1	13.1	-44.82	V
7520.0	-35.21	0.8	11.5	-24.51	V
9400.0	-42.12	0.8	12.0	-30.92	V
11280.0	-40.83	0.3	11.5	-29.63	V
3760.0	-43.00	7.3	12.6	-37.70	H
5840.0	-56.93	1.1	13.1	-44.93	H
7520.0	-53.90	0.8	11.5	-43.20	H
9400.0	-50.71	0.8	12.0	-39.51	H
11280.0	-40.18	0.3	11.5	-28.98	H

CTTL Test Report

4.2 Occupied bandwidth

Specifications:	2.1049,22.917(b),24.238(b)
Date of Test	2015-06-01
Test conditions:	Ambient Temperature:15℃-35℃ Relative Humidity:30%-60% Air pressure: 86-106kPa
Operation Mode	TX on, channel 128, 190, 251 and 512, 661, 810 for GSM/GPRS mode.
Test Results:	--

Test Setup

During the test, the EUT was controlled via the Wireless Communications Test Set to ensure max power transmission and proper modulation and measured by spectrum analyzer.

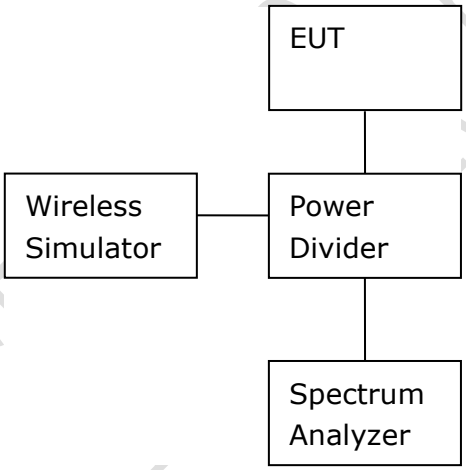

Test Method

The 99% occupied bandwidth was calculated form the spectrum analyzer. Markers in the spectrum analyzer were then placed between the calculated frequencies to show the calculated 99% power band.

Note:

None

Test Data:

GSM/GPRS mode

	EUT channel no.	99% occupied bandwidth [kHz]
GMSK	128 (824.2MHz)	250.00
	190 (836.4MHz)	246.79
	251 (848.8MHz)	246.79
	512 (1850.2MHz)	250.00
	661 (1880 MHz)	246.80
	810 (1909.8 MHz)	246.80

Graphical results for GSM/GPRS mode:

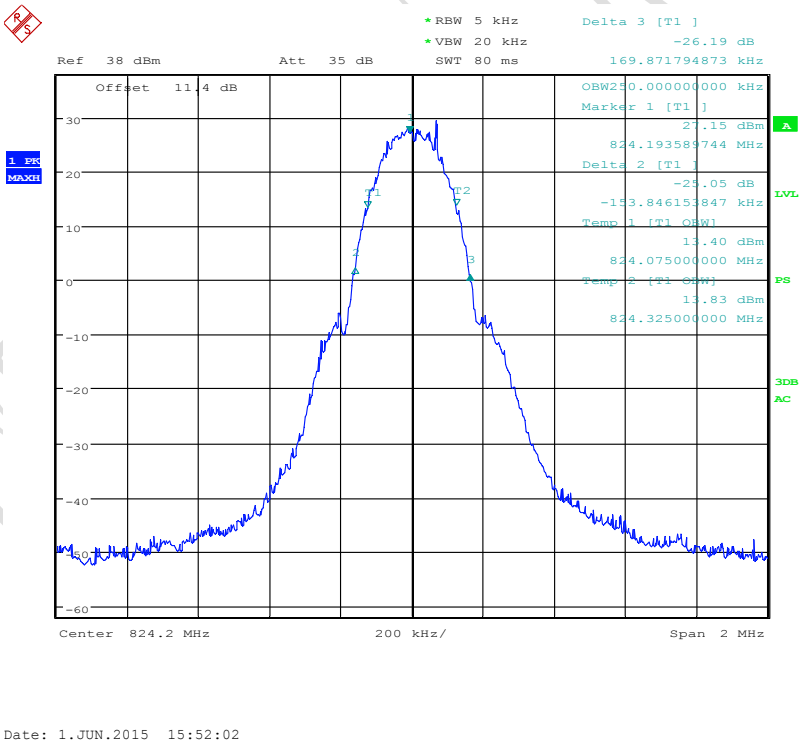

GMSK Channel 128

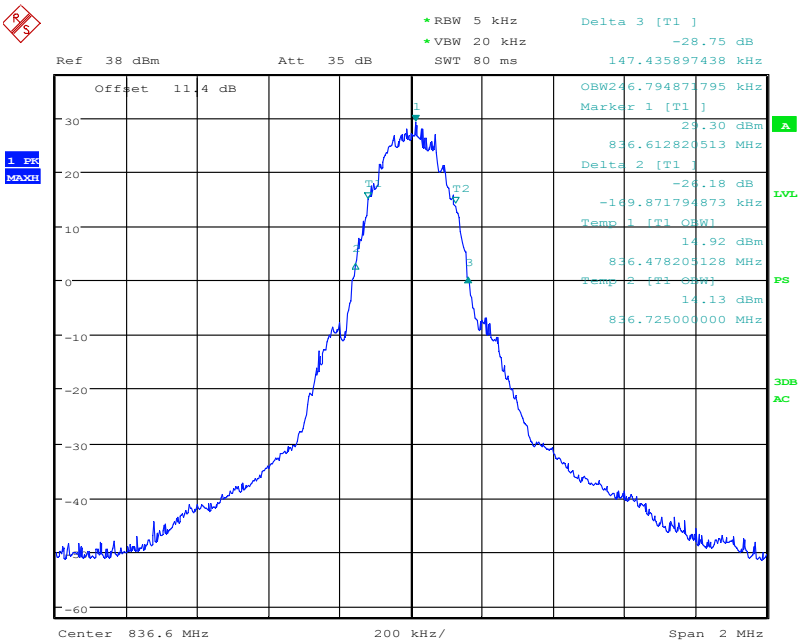

GMSK Channel 190

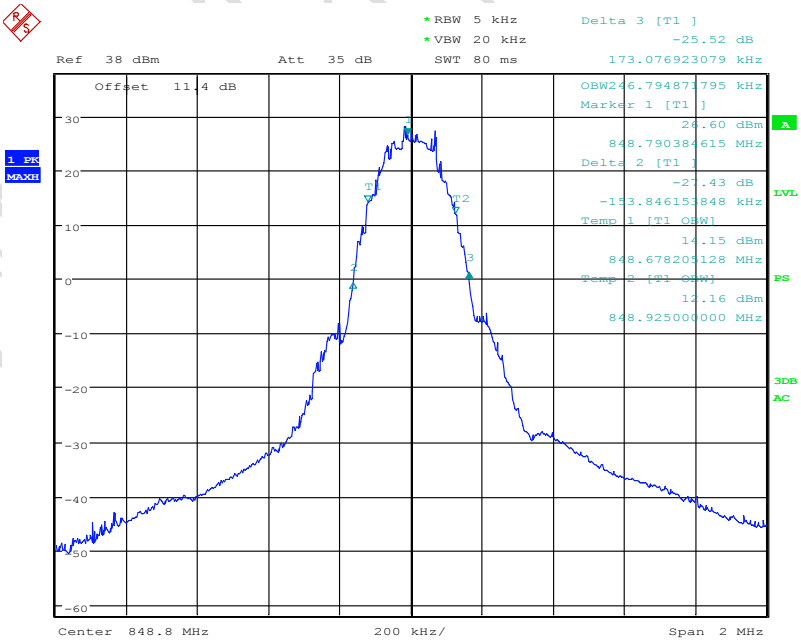

GMSK Channel 251

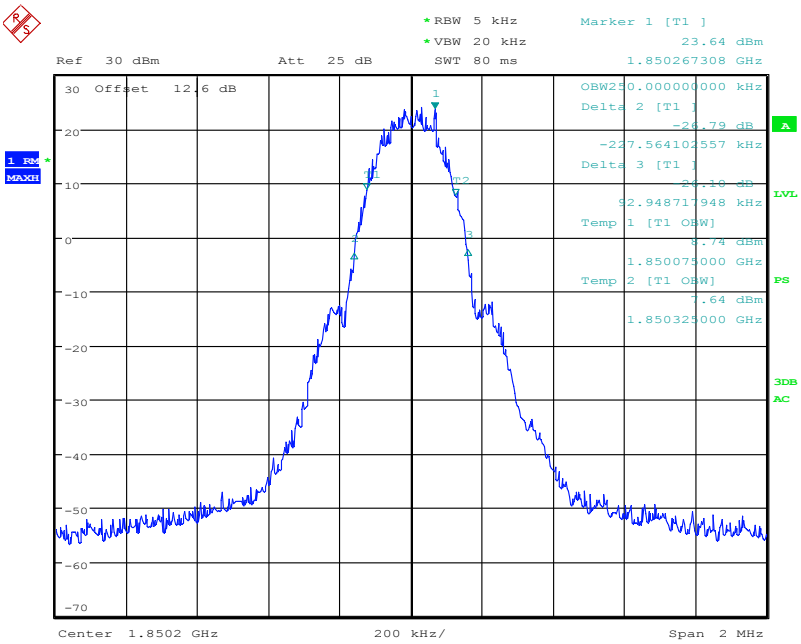

GMSK Channel 512

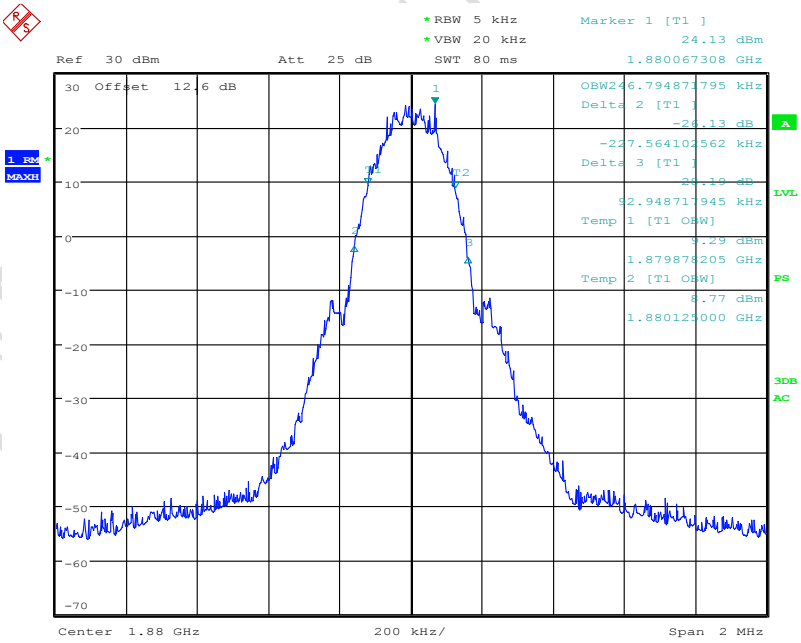

GMSK Channel 661

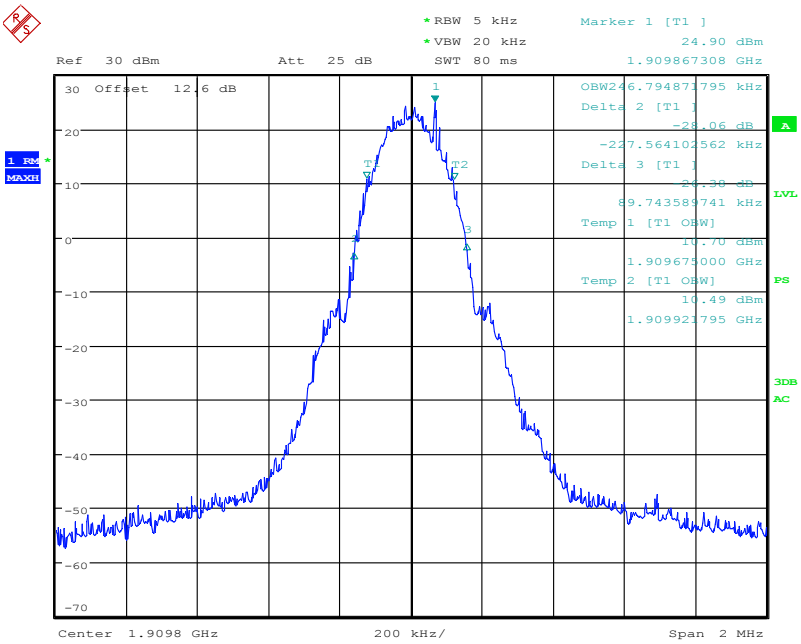

Date: 1.JUN.2015 18:20:29

GMSK Channel 810

4.3 Frequency Stability over Temperature Variation

Specifications:	2.1055,22.355,24.235
Date of Test	2015-06-01
Test conditions:	Ambient Temperature:-30℃-50℃ Relative Humidity:30%-60% Air pressure: 86-106kPa
Operation Mode	TX on, channel 190 and 661 for GSM/GPRS mode.
Test Results:	Pass

Limit	
Frequency deviation [ppm]	±2.5

Test Setup

The EUT was placed in a temperature chamber, demonstrated as figure T. The Wireless Telecommunications Test Set was used to set the Tx channel and power level, modulate the TX signal with different bit patterns and measure the frequency of Tx.

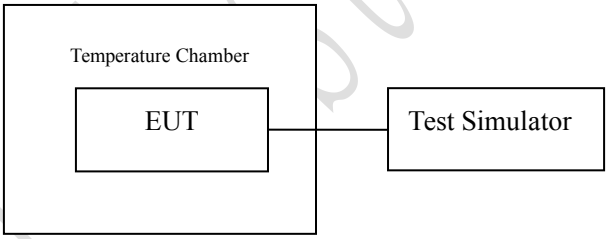

Figure T: setup for measurement of frequency stability over temperature variation

Test Method

1. The EUT was turned off and placed in the temperature chamber.
2. The temperature of the chamber was set to -30℃ and allowed to stabilize.
3. The EUT temperature was allowed to stabilize for 45 minutes.
4. The EUT was turned on and set to transmit with Wireless Telecommunications Test Set.
5. The maximum transmit frequency deviation during one minute period was measured by Wireless Communications Test Set.
6. The steps 3-5 were repeated for -30℃,-20℃, -10℃, 0℃, 10℃, 20℃, 30℃, 40℃ and 50℃.

Test data：

GSM/GPRS 850 band mode

	Temperature[℃]	Offset[Hz]	Offset[ppm]	Remarks
GMSK	-30	62	0.07411	Pass
	-20	58	0.06933	Pass
	-10	-51	-0.06096	Pass
	0	54	0.06455	Pass
	10	41	0.04901	Pass
	20	47	0.05618	Pass
	30	48	0.05738	Pass
	40	43	0.05140	Pass
	50	47	0.05618	Pass

GSM/GPRS 1900 band mode

	Temperature[℃]	Offset[Hz]	Offset[ppm]	Remarks
GMSK	-30	-100	-0.05319	Pass
	-20	-62	-0.03298	Pass
	-10	-57	-0.03032	Pass
	0	-59	-0.03138	Pass
	10	-56	-0.02979	Pass
	20	-64	-0.03404	Pass
	30	-60	-0.03191	Pass
	40	-62	-0.03298	Pass
	50	-51	-0.02713	Pass

CTTL Test Report

4.4 Frequency Stability over Voltage Variation

Specifications:	2.1055,22.355,24.235
Date of Test	2015-06-01
Test conditions:	Ambient Temperature:15℃-35℃ Relative Humidity:30%-60% Air pressure: 86-106kPa
Operation Mode	TX on, channel 190 and 661 for GSM/GPRS mode.
Test Results:	Pass

Limit	
Frequency deviation [ppm]	±2.5

Test Setup

The EUT was placed in a shielding chamber and powered by an adjustable power supply, demonstrated as figure V. A Wireless Telecommunications Test Set was used to set the TX channel and power level, modulate the TX signal with different bit patterns and measure the frequency of TX.

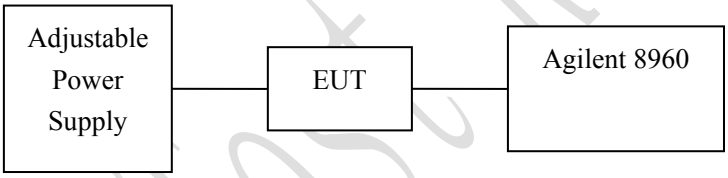

Figure V: test setup for measurement of frequency stability over voltage variation

Test Method

The EUT was powered by the adjustable power supply. The frequency stability is measured by the Wireless Telecommunications Test Set.

Test data:

GSM/GPRS 850MHz band GMSK mode

Voltage (V)	Offset[Hz]	Offset[ppm]	Remarks
3.3	-66	-0.07889	Pass
3.7	48	0.05738	Pass
4.2	-46	-0.05498	Pass

GSM/GPRS 1900MHz band GMSK mode

Voltage (V)	Offset[Hz]	Offset[ppm]	Remarks
3.3	-64	-0.07650	Pass
3.7	-61	-0.07291	Pass
4.2	-61	-0.07291	Pass

4.5 Conducted RF Power Output

Specifications:	2.1046,22.913(a),24.232(c)
Date of Tests	2015-02-07-2015-04-09
Test conditions:	Ambient Temperature:15℃-35℃ Relative Humidity:30%-60% Air pressure: 86-106kPa
Operation Mode	TX on, channel 128, 190, 251 and 512, 661, 810 for GSM/GPRS mode.
Test Results:	Pass

Limit Level Construction: ERP: According to Part 22.913(a) and 24.232(c), the ERP of mobile transmitters and auxiliary test transmitters must not exceed 7 Watts.	
Limits for ERP	
Frequency range	**Limit Level (ERP)**
TX channel	7W or 38.5dBm

Test Setup:

During the test, the EUT was controlled via the Wireless Communications Test Set to ensure max power transmission and proper modulation and measured by spectrum analyzer.

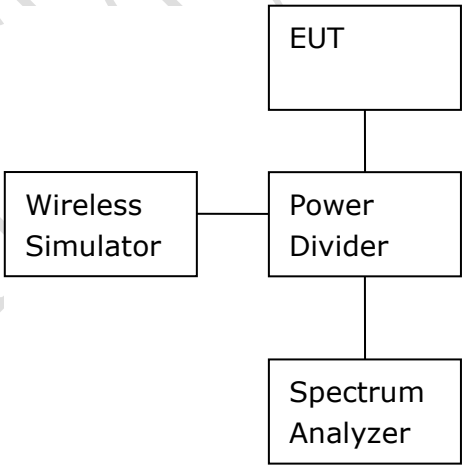

Test Method

1) The EUT was coupled to the spectrum analyzer and the base station simulator through a power divider. The lost of the cables the test system is calibrated to correct the readings.
2) The spectrum analyzer was set to Maxpeak Detector function and Maximum hold mode.
3) The resolution bandwidth of the spectrum analyzer was comparable to the emission bandwidth.

Note:

None

Test Results:

GSM 850 band GSM mode

Channel No.	Maximum output power（PK） [dBm]
128 (824.2MHz)	33.04
190 (836.6MHz)	33.13
251 (848.8MHz)	32.93

GSM 850 band GPRS mode

Channel No.	Maximum output power（PK） [dBm]			
	1TS	2TS	3TS	4TS
128 (824.2MHz)	33.25	30.92	28.70	26.62
190 (836.6MHz)	33.16	30.96	28.78	26.83
251 (848.8MHz)	33.04	31.01	28.93	26.92

GSM 1900 band GSM mode

Channel No.	Maximum output power（PK） [dBm]
512 (1850.2MHz)	30.05
661 (1880.0MHz)	30.22
810 (1909.8MHz)	30.03

GSM 1900 band GPRS mode

Channel No.	Maximum output power（PK） [dBm]			
	1TS	2TS	3TS	4TS
512 (1850.2MHz)	30.01	28.21	26.14	24.01
661 (1880.0MHz)	30.16	28.37	26.36	24.29
810 (1909.8MHz)	30.09	28.26	26.26	24.14

CTTL Test Report

4.6 Conducted Spurious Emission

Specifications:	2.1051,22.917,24.238
Date of Tests	2015-06-01~2015-06-02
Test conditions:	Ambient Temperature:15℃-35℃ Relative Humidity:30%-60% Air pressure: 86-106kPa
Operation Mode	TX on, channel 128, 190, 251 and 512, 661, 810 for GSM/GPRS mode.
Test Results:	Pass

Limit Level Construction:
According to Part 24.238 (a), i.e., Out of band emissions. The power of any emission outside of the authorized operating frequency ranges must be attenuated below the transmitting power (P) by a factor of at least 43 + 10 log(P) dB, so the limit level is:

P(dBm) – (43 + 10 log(P)) dB= -13dBm

Limits for Radiated spurious emissions(UE)	
Frequency range	**Limit Level /Resolution Bandwidth**
30 MHz to 20000 MHz	-13dBm/1MHz

Test Setup:

During the test, the EUT was controlled via the Wireless Communications Test Set to ensure max power transmission and proper modulation and measured by spectrum analyzer.

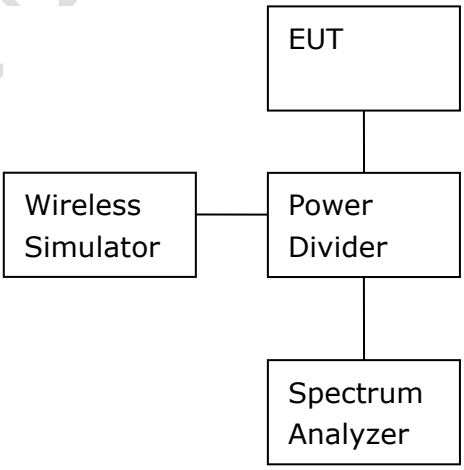

CTTL Test Report

Test Method

The measurement was performed accordance with section 2.2.13 of ANSI/TIA-603-C-2002: *Land Mobile FM or PM Communications Equipment Measurement and Performance Standards*.

The following steps outline the procedure used to measure the conducted emissions from the EUT.

1. Determine frequency range for measurements: From CFR 2.1057 the spectrum should be investigated from the lowest radio frequency generated in the equipment up to at least the 10th harmonic of the carrier frequency.

Note:

None

Graphical results :

GMSK, Low channel, 824.200 MHz, 30MHz to 1GHz

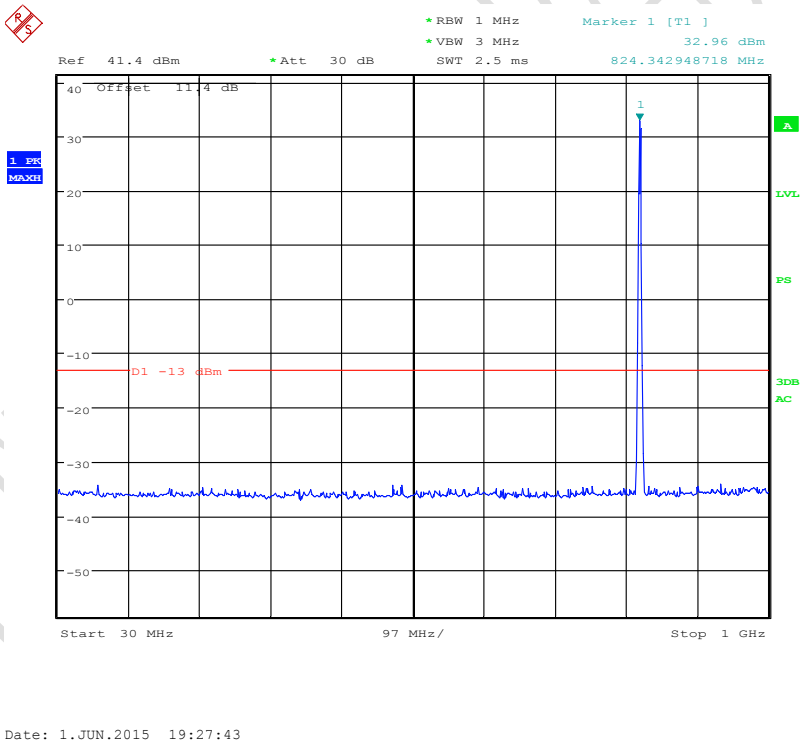

Note: The strong emission shown in each case is the carrier signal.

GMSK, Low channel, 824.200 MHz, 1GHz to 10GHz

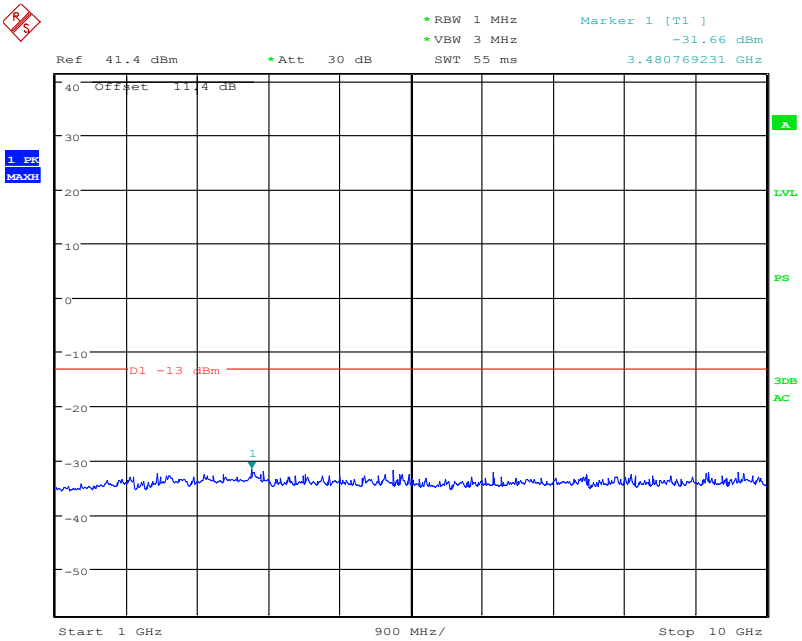

Date: 1.JUN.2015 19:29:46

GMSK, Low channel, 824.200 MHz, 10GHz to 20GHz

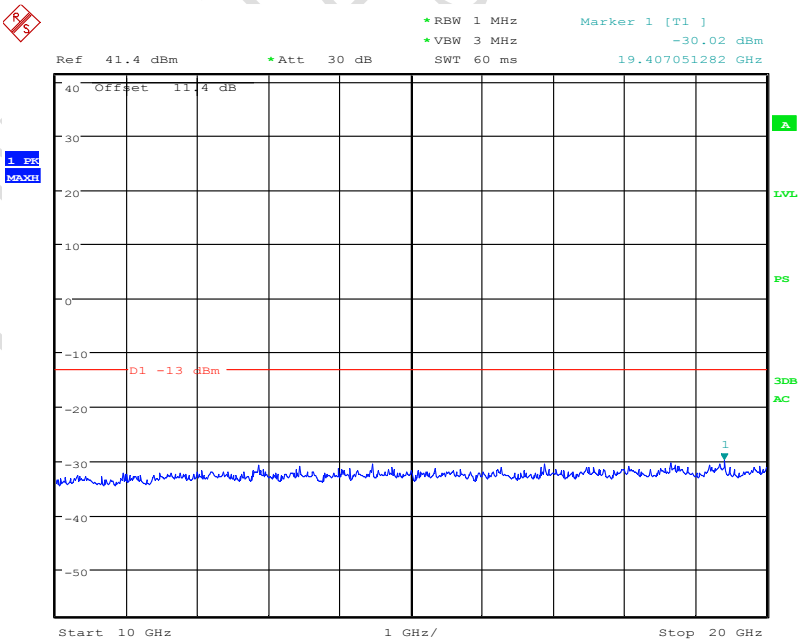

Date: 1.JUN.2015 19:30:56

GMSK, Mid Channel, 836.6 MHz, 30MHz to 1GHz

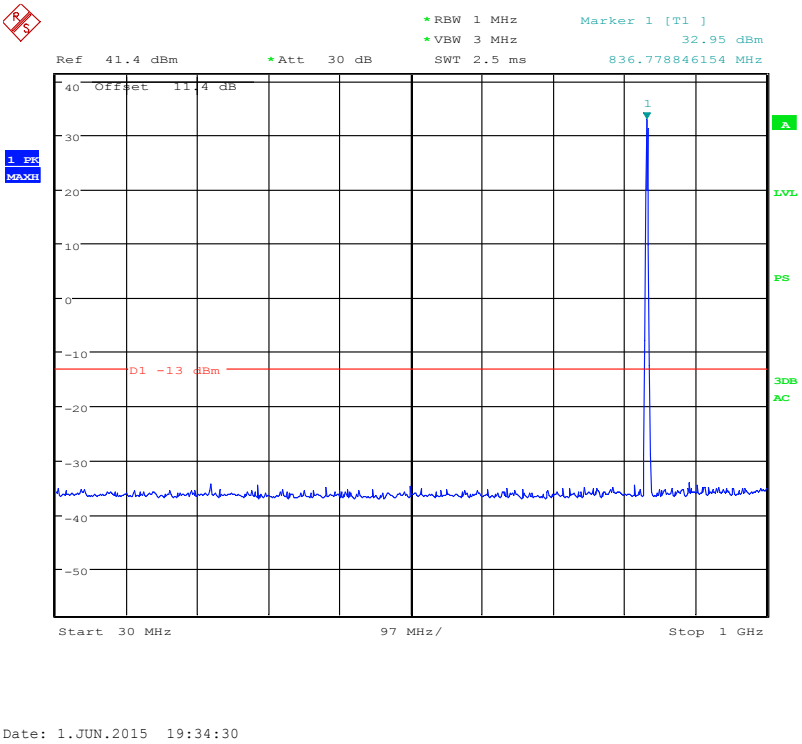

Note: The strong emission shown in each case is the carrier signal.

GMSK, Mid Channel, 836.6 MHz, 1GHz to 10GHz

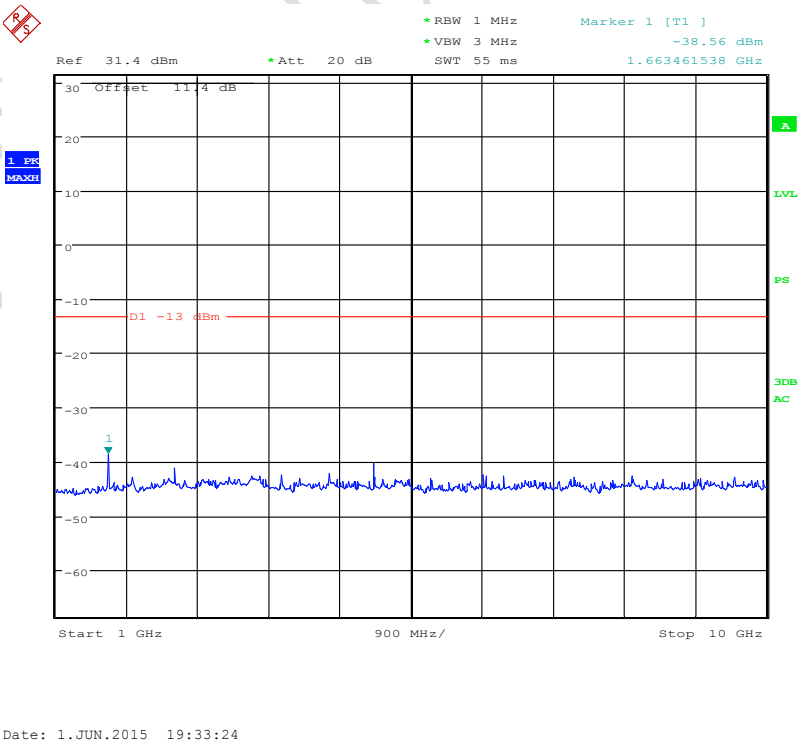

GMSK, Mid Channel, 836.6 MHz, 10GHz to 20GHz

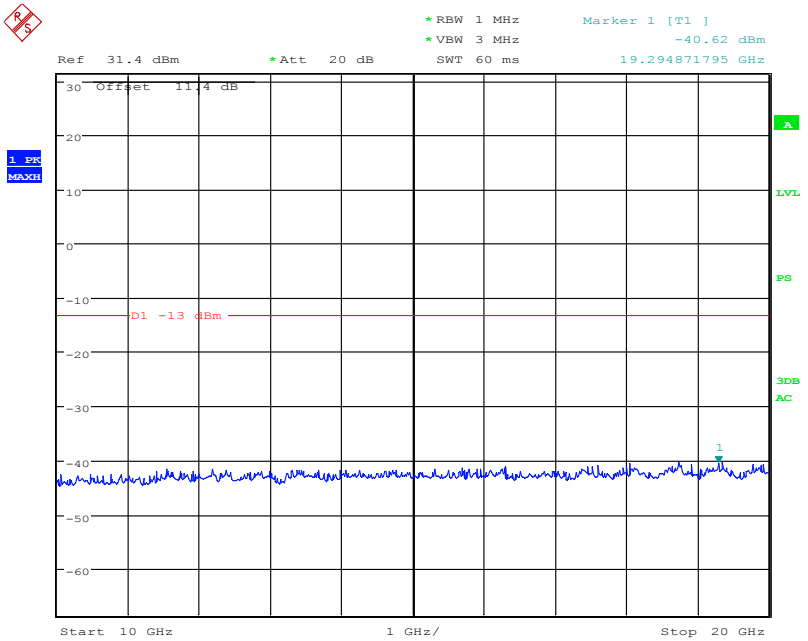

Date: 1.JUN.2015 19:32:47

GMSK, High Channel, 848.8 MHz, 30MHz to 1GHz

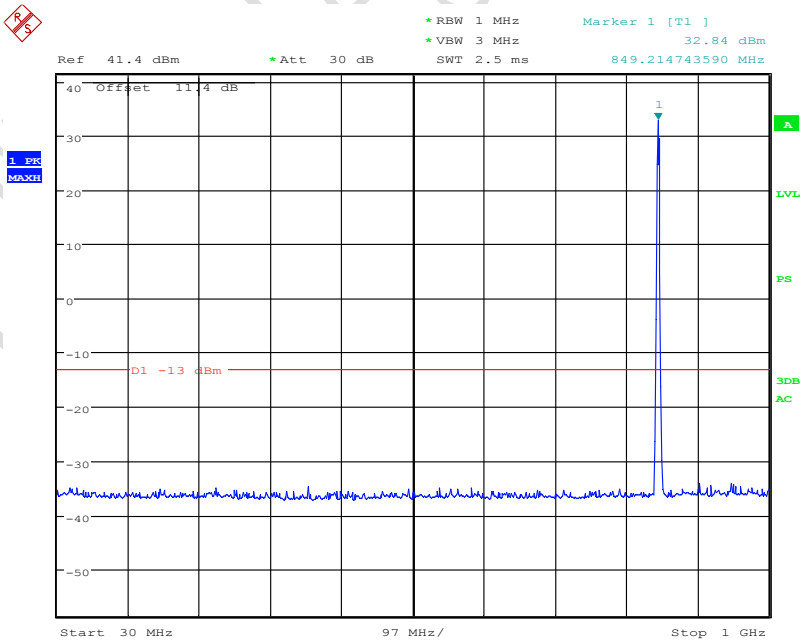

Date: 1.JUN.2015 19:35:15

Note: The strong emission shown in each case is the carrier signal.

GMSK, High Channel, 848.8 MHz, 1GHz to 10GHz

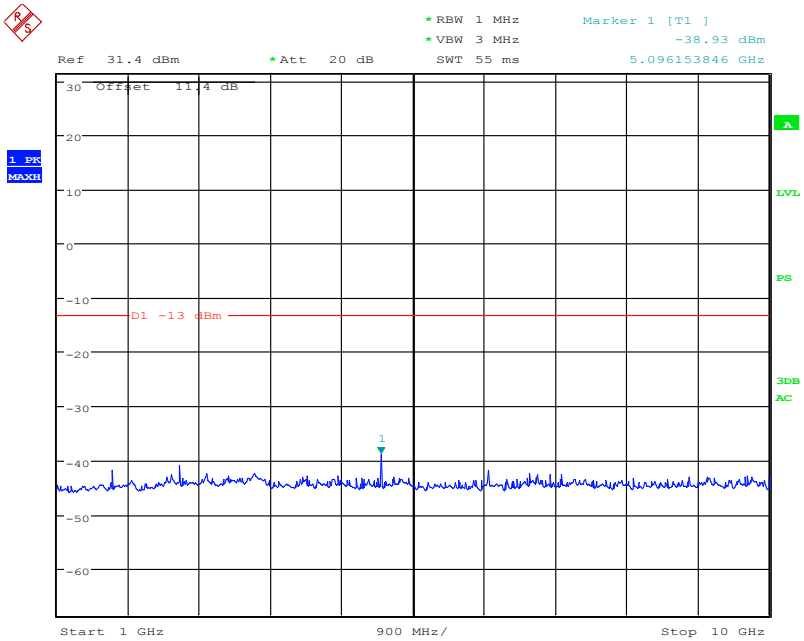

Date: 1.JUN.2015 19:36:08

GMSK, High Channel, 848.8 MHz, 10GHz to 20GHz

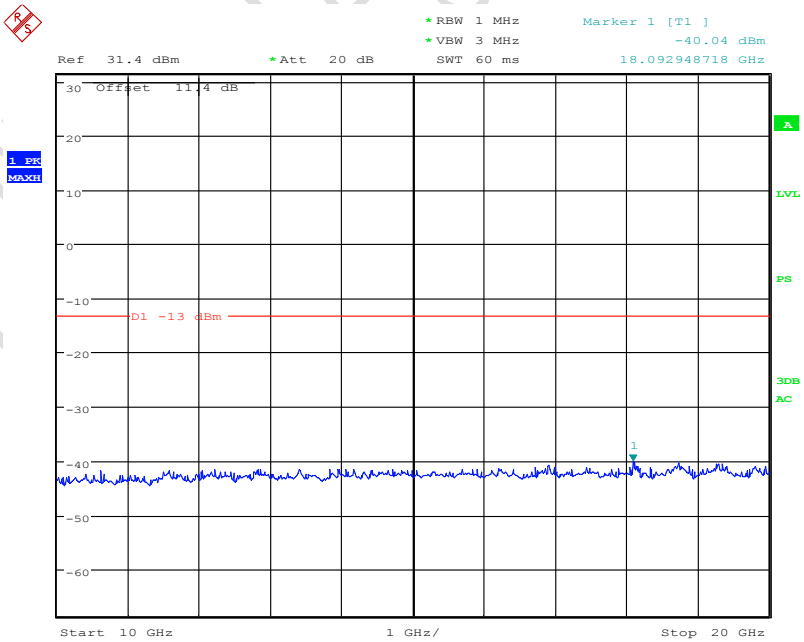

Date: 1.JUN.2015 19:37:04

GMSK, Low channel, 1850.2 MHz, 30MHz to 1GHz

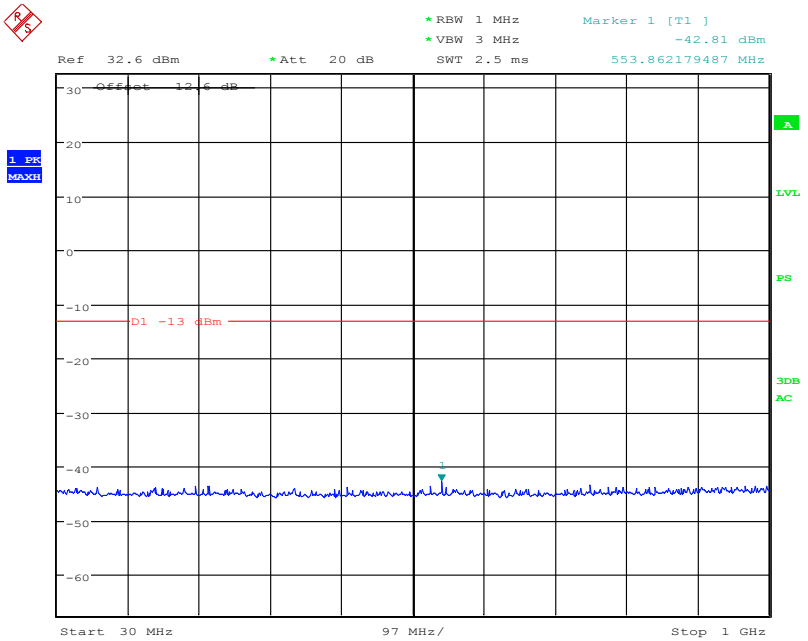

Date: 2.JUN.2015 19:02:42

GMSK, Low channel, 1850.2 MHz, 1GHz to 10GHz

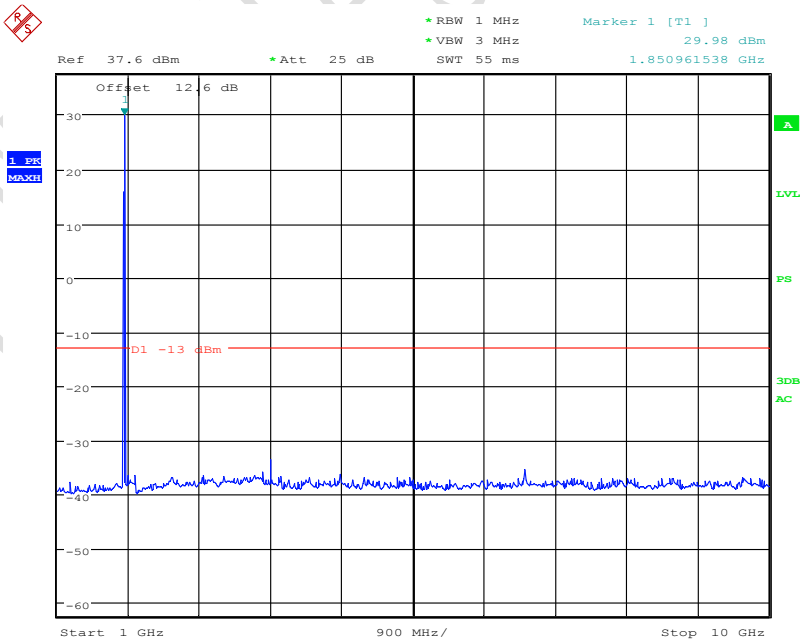

Date: 2.JUN.2015 19:04:54

Note: The strong emission shown is the carrier signal.

GMSK, Low channel, 1850.2 MHz, 10GHz to 20GHz

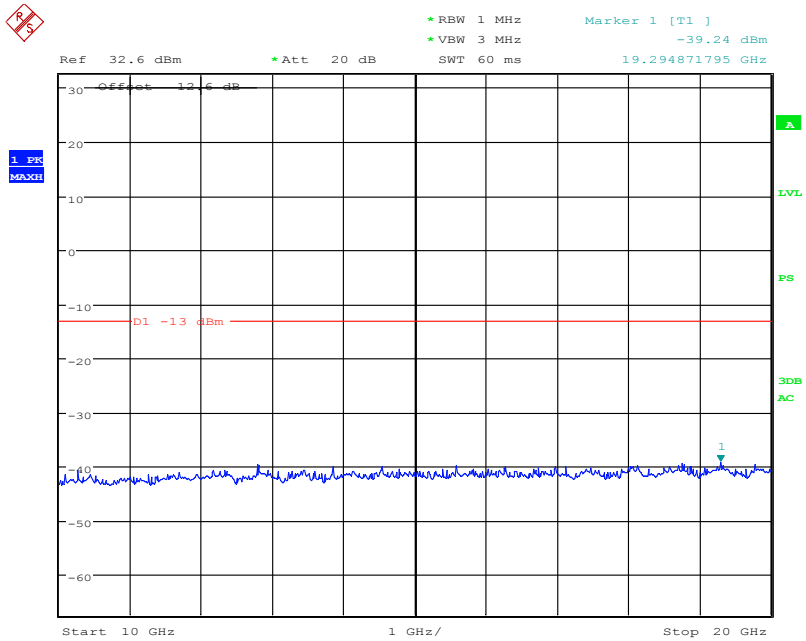

Date: 2.JUN.2015 19:06:07

GMSK, Middle channel, 1880.0 MHz, 30MHz to 1GHz

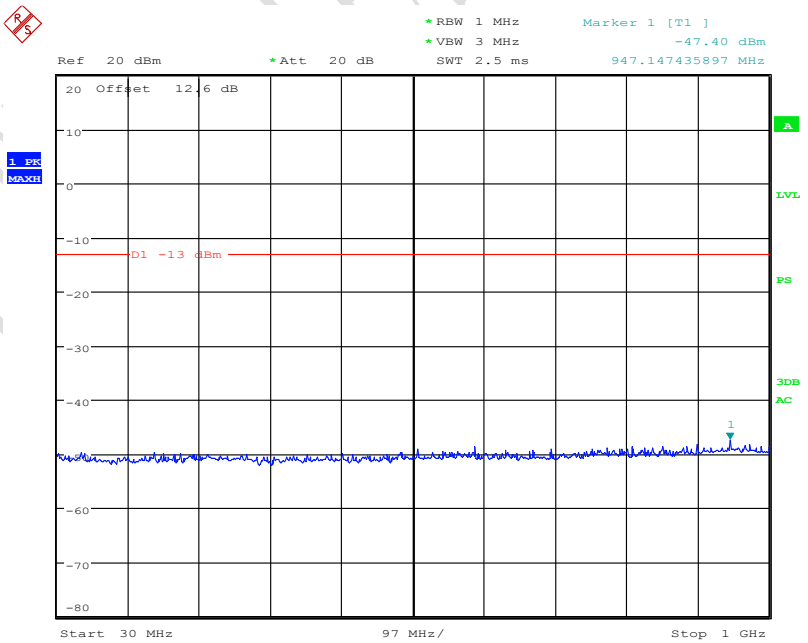

Date: 2.JUN.2015 19:09:07

GMSK, Middle channel, 1880.0 MHz, 1GHz to 10GHz

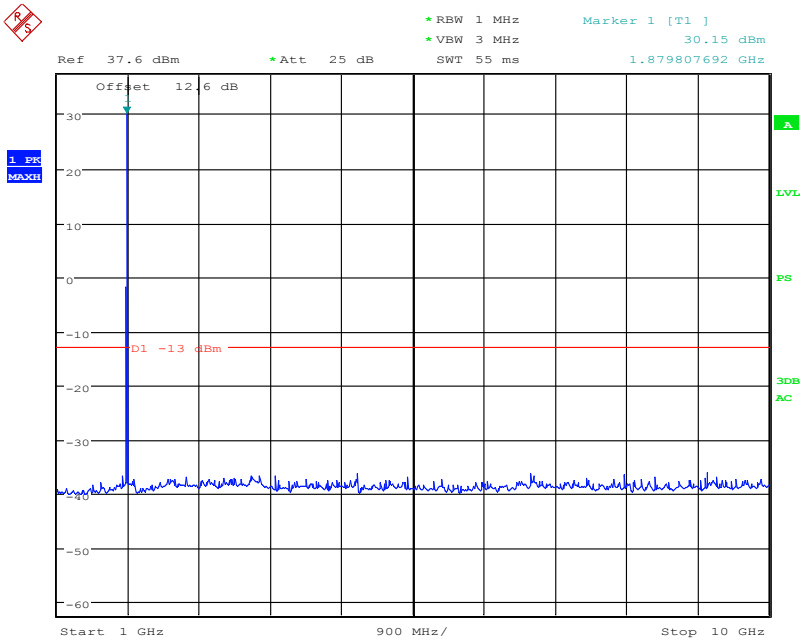

Date: 2.JUN.2015 19:07:47

Note: The strong emission shown is the carrier signal.

GMSK, Middle channel, 1880.0 MHz, 10GHz to 20GHz

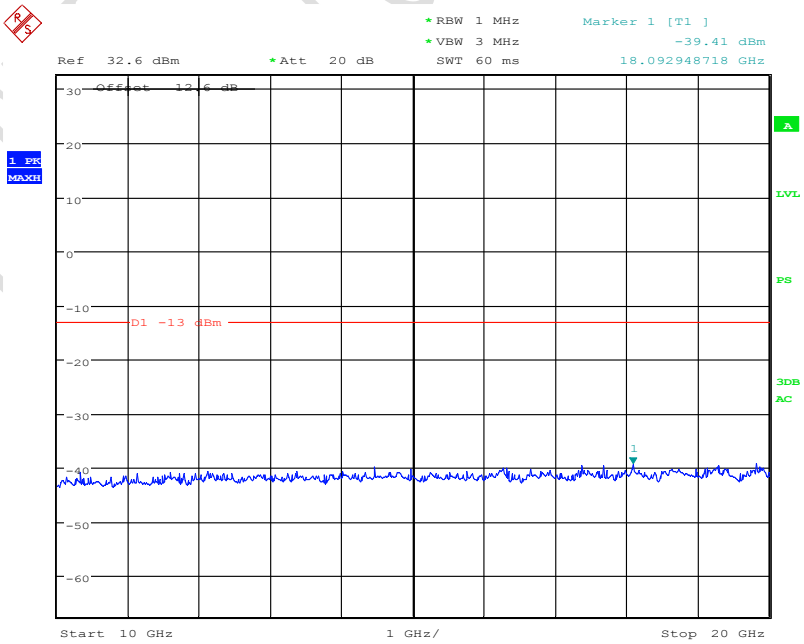

Date: 2.JUN.2015 19:07:01

GMSK, High channel, 1909.8 MHz, 30MHz to 1GHz

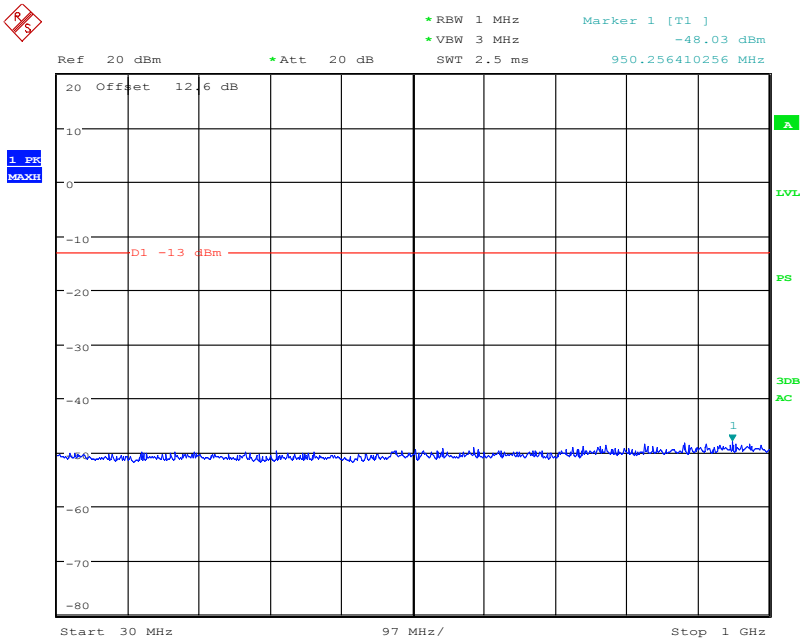

Date: 2.JUN.2015 19:10:24

GMSK, High channel, 1909.8 MHz, 1GHz to 10GHz

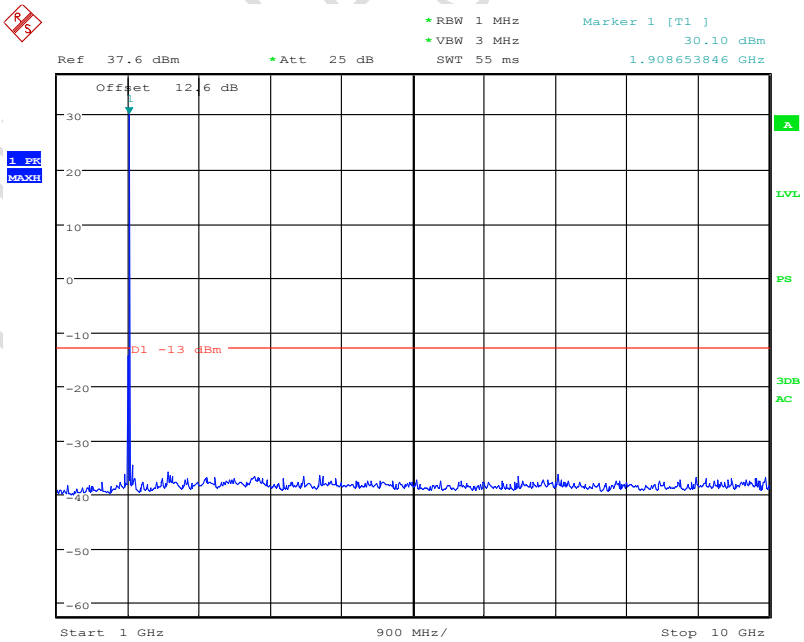

Date: 2.JUN.2015 19:11:15

Note: The strong emission shown is the carrier signal.

GMSK, High channel, 1909.8 MHz, 10GHz to 20GHz

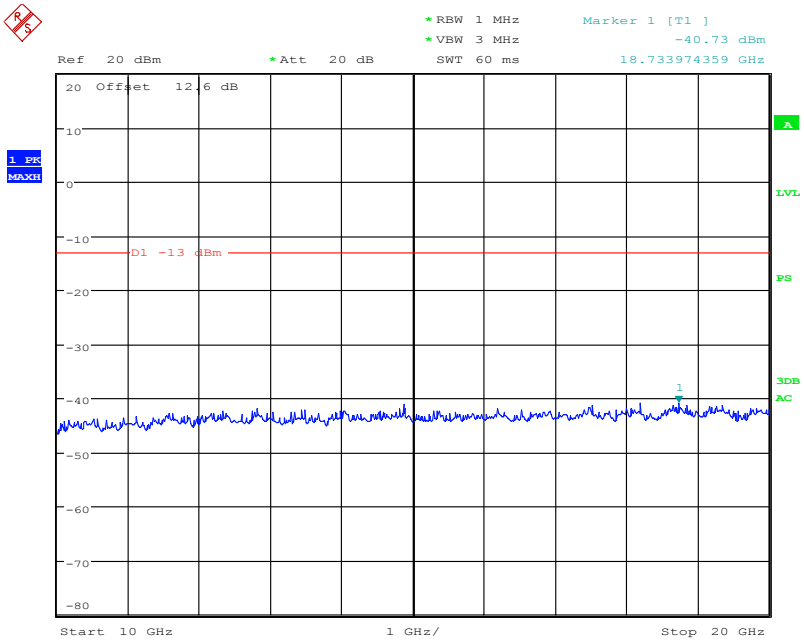

Date: 2.JUN.2015 19:11:59

CTTL Test

4.7 Band Edge

Specifications:	2.1051, 24.238, 2.1053, 22.917
Date of Tests	2015-06-16
Test conditions:	Ambient Temperature:15℃-35℃ Relative Humidity:30%-60% Air pressure: 86-106kPa
Operation Mode	TX on, channel 128, 251 and 512, 810 for GSM/GPRS mode.
Test Results:	Pass

Limit Level Construction:
According to Part 24.238 (a), i.e., Out of band emissions. The power of any emission outside of the authorized operating frequency ranges must be attenuated below the transmitting power (P) by a factor of at least 43 + 10 log(P) dB, so the limit level is:

P(dBm) – (43 + 10 log(P)) dB= -13dBm

Limits for Radiated spurious emissions	
Frequency range	**Limit Level**
Band edge	-13dBm

Test Setup:

During the test, the EUT was controlled via the Wireless Communications Test Set to ensure max power transmission and proper modulation and measured by spectrum analyzer.

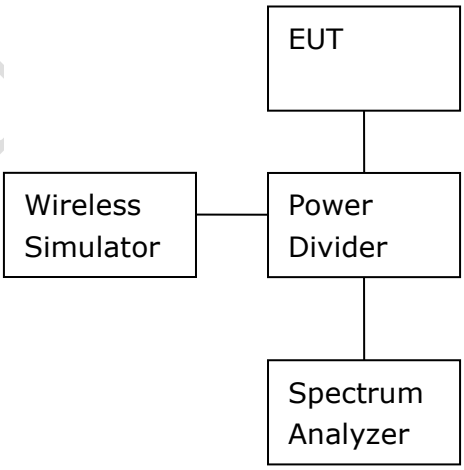

CTTL Test Report

Test Method

1) The EUT was coupled to the EMI test receiver analyzer mode and the base station simulator through a power divider. The lost of the cables the test system is calibrated to correct the readings.
2) The spectrum analyzer was set to Maxpeak Detector function and Maximum hold mode.
3) The resolution bandwidth of the spectrum analyzer was a little greater than 1% of the 26dB emission bandwidth.

Note: --

CTTL Test Report

Test Results:

Graphical results:

GMSK; Cellular low channel, below 824 MHz

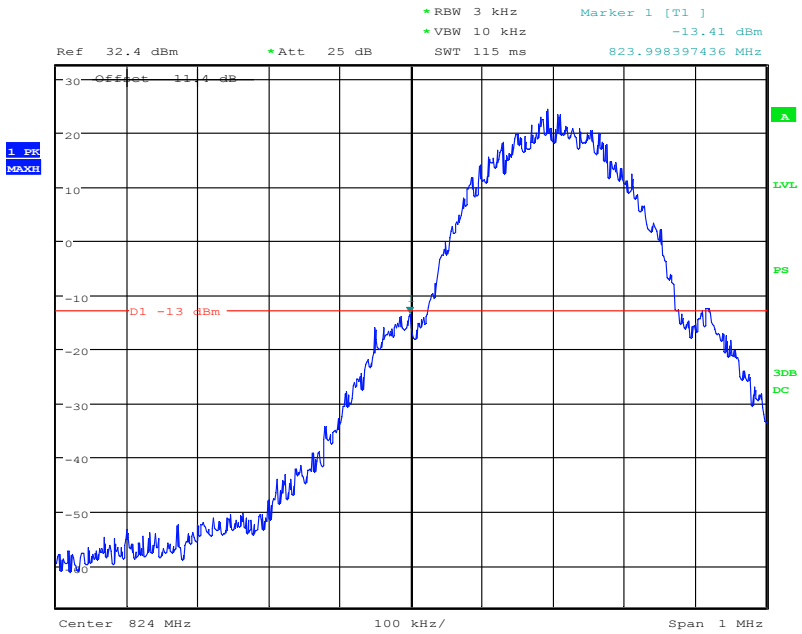

GMSK; Cellular high channel, above 849 MHz

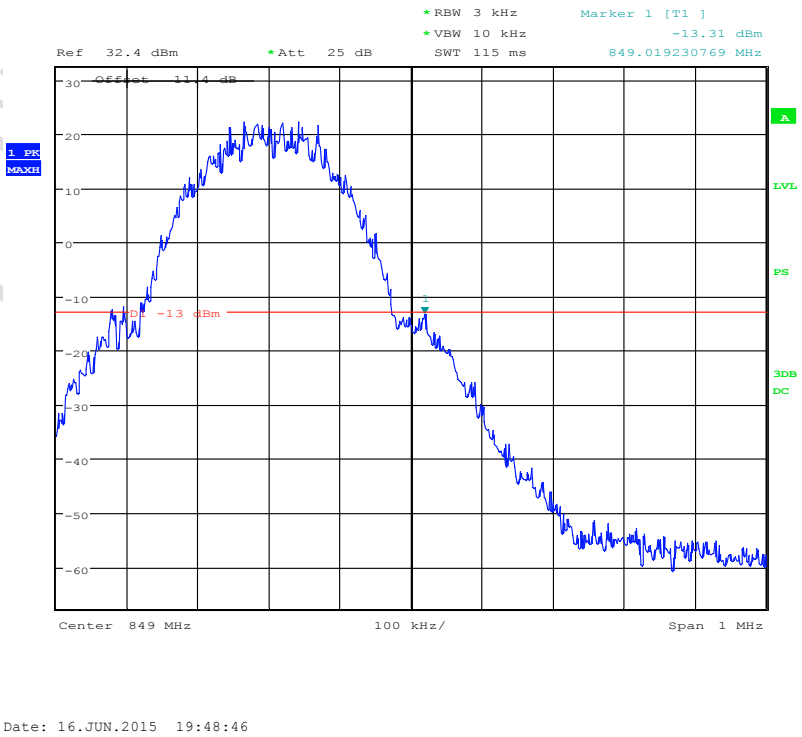

GMSK; PCS low channel, below 1850 MHz

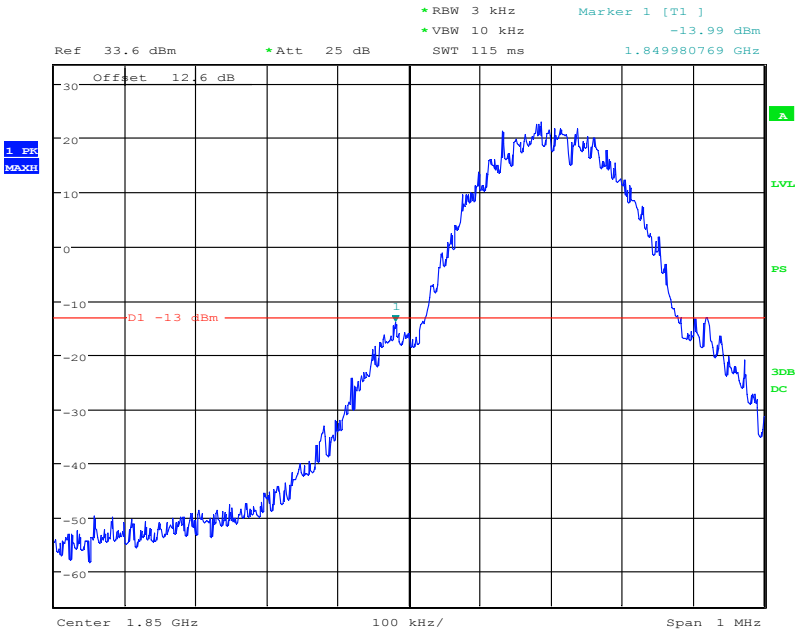

Date: 16.JUN.2015 19:51:55

GMSK; PCS high channel, above 1910 MHz

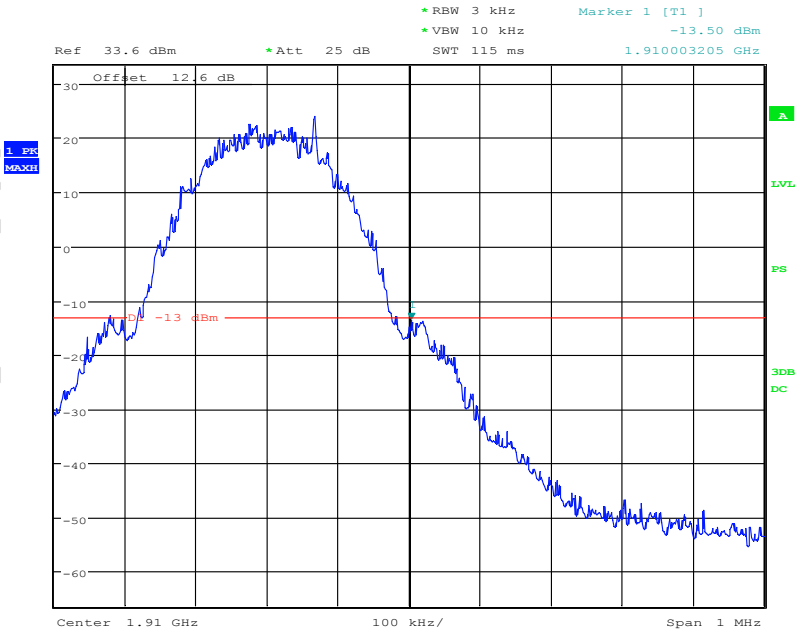

Date: 16.JUN.2015 19:55:49

4.8 ERP and EIRP

Specifications:	22.913(a), 24.232(b)
Date of Tests	2015-06-04-2015-06-05
Test conditions:	Ambient Temperature:15℃-35℃ Relative Humidity:30%-60% Air pressure: 86-106kPa
Operation Mode	TX on, channel 128,190,251,512, 661 and 810 for GSM/GPRS mode.
Test Results:	Pass

Limit Level Construction:
Part 22:
According to Part 22.913(a)(2):The ERP of mobile transmitters and auxiliary test transmitters must not exceed 7 Watts.
Part 24:
According to Part 24.232(b):The EIRP of mobile transmitters and auxiliary test transmitters must not exceed 2 Watts.

Test Setup:
The EUT was placed in an anechoic chamber. The Communications Test Set was used to set the TX channel and power level and modulate the TX signal with different bit patterns.

Test Method:
The measurement method is substitution method accordance with section 2.2.12 of ANSI/TIA-603-C: *Land Mobile FM or PM Communications Equipment Measurement and Performance Standards*.
(a) Connect the equipment as illustrated and measure the spurious emissions as the method as above.

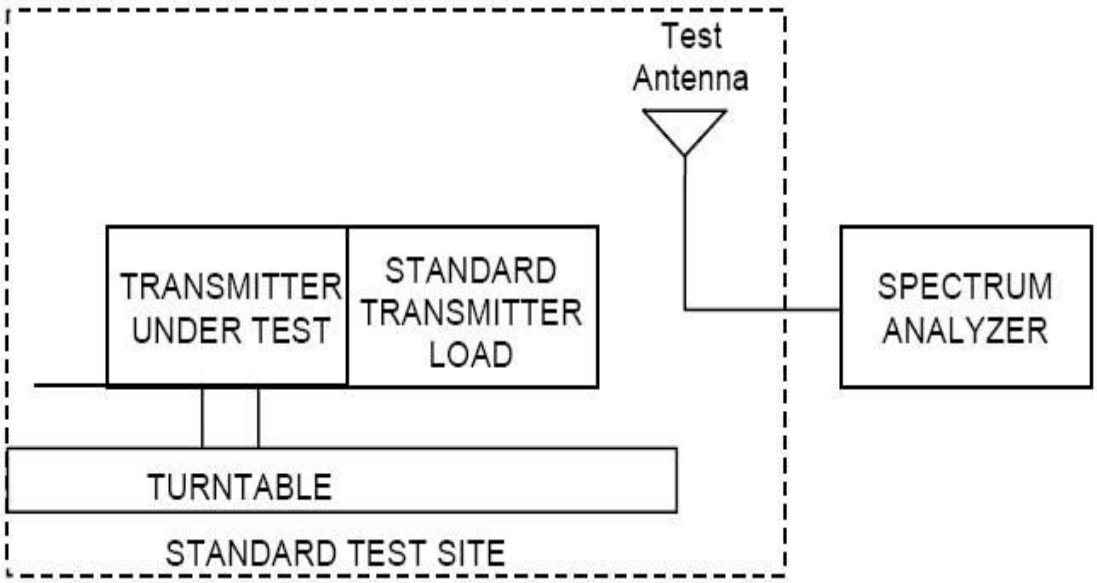

(b) Reconnect the equipment as illustrated.

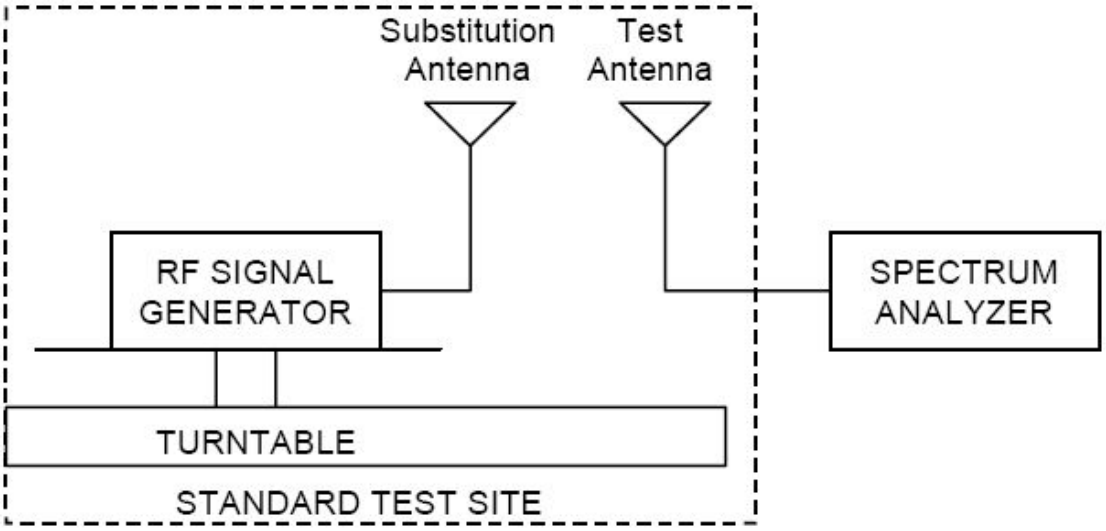

(c) Remove the transmitter and replace it with a substitution antenna. The center of the substitution antenna should be approximately at the same location as the center of the transmitter.

(d) Feed the substitution antenna at the transmitter end with a signal generator connected to the antenna by means of a non-radiating cable. With the antennas at both ends horizontally polarized, and with the signal generator tuned to a particular spurious frequency, raise and lower the test antenna to obtain a maximum reading at the spectrum analyzer. Adjust the level of the signal generator output until the previously recorded maximum reading for this set of conditions is obtained. This should be done carefully repeating the adjustment of the test antenna and generator output.

(e) Repeat step d) with both antennas vertically polarized for each spurious frequency.

(f) Calculate power in dBm into a reference ideal half-wave dipole antenna by reducing the readings obtained in steps d) and e) by the power loss in the cable between the generator and the antenna, and further corrected for the gain of the substitution antenna used relative to an ideal half-wave dipole antenna by the following formula:

***ERP=S.G output(dBM)-cable loss* (dB) + *antenna gain* (dBd)**

***EIRP=S.G output(dBM)-cable loss* (dB) + *antenna gain* (dBi)**

Test Data （GSM 850 GSM）

Frequency [MHz]	S.G output [dBm]	Cable loss [dB]	Antenna Gain [dB]	ERP (P_d) [dBm]
824.2	29.85	3.4	6.0	32.45
836.4	29.65	3.4	6.0	32.25
848.8	29.44	3.4	6.0	32.04

Test Data （GSM 850 GPRS）

Frequency [MHz]	S.G output [dBm]	Cable loss [dB]	Antenna Gain [dB]	ERP (P_d) [dBm]
824.2	29.01	3.4	6.0	31.61
836.4	28.65	3.4	6.0	31.25
848.8	28.69	3.4	6.0	31.29

Test Data （PCS 1900 GSM）

Frequency [MHz]	S.G output [dBm]	Cable loss [dB]	Antenna Gain [dB]	EIRP (P_d) [dBm]
1850.2	25.00	5.0	10.4	30.40
1880.0	24.57	5.0	10.4	29.97
1909.8	24.89	5.1	10.4	30.19

Test Data （PCS 1900 GPRS）

Frequency [MHz]	S.G output [dBm]	Cable loss [dB]	Antenna Gain [dB]	EIRP (P_d) [dBm]
1850.2	24.33	5.0	10.4	29.73
1880.0	24.52	5.0	10.4	29.92
1909.8	24.49	5.1	10.4	29.79

CTTL Test Report

Annex A External Photos

See the document ”U100- External Photos”.

Annex B Internal Photos

See the document ” U100-Internal Photos”.

ANNEX C Deviations from Prescribed Test Methods

No deviation from Prescribed Test Methods.

The End of this Report

CTTL Test Report