TM9300 DMR Mobile Radios
TM9400 P25 Mobile Radios

Service Manual

MMB-00004-09 · Issue 09 · June 2023

www.taitradio.com

Contact Information

Tait Communications
Corporate Head Office

Tait International Limited
P.O. Box 1645
Christchurch
New Zealand

Imported into the EU by:
Tait Communications
GmbH
Stipcakgasse 40
1230 Vienna
Austria

Imported into the UK by:
Tait Europe Limited
Unit A, Buckingham Business
Park,
Anderson Road
Swavesey
Cambridge, CB24 4UQ
United Kingdom

For the address and telephone number of regional offices, refer to our website:
www.taitcommunications.com

Copyright and Trademarks

All information contained in this document is the property of Tait International Limited. All rights reserved. This document may not, in whole or in part, be copied, photocopied, reproduced, translated, stored, or reduced to any electronic medium or machine-readable form, without prior written permission from Tait International Limited.

The word TAIT and the TAIT logo are trademarks of Tait International Limited.

All trade names referenced are the service mark, trademark or registered trademark of the respective manufacturers.

By using a Tait product you are agreeing to be bound by the terms of the Tait Software Licence Agreement.Please read the Tait Software Licence Agreement carefully before using this Tait product. If you do not agree to the terms of the Tait Software Licence Agreement, do not use the Tait Product. The full agreement is available at https://www.taitcommunications.com/our-resources/compliance#Tait_Software_Licence_Agreement.

Disclaimer

There are no warranties extended or granted by this document. Tait International Limited accepts no responsibility for damage arising from use of the information contained in the document or of the equipment and software it describes. It is the responsibility of the user to ensure that use of such information, equipment and software complies with the laws, rules and regulations of the applicable jurisdictions.

Enquiries and Comments

If you have any enquiries regarding this document, or any comments, suggestions and notifications of errors, please contact your regional Tait office.

Updates of Manual and Equipment

In the interests of improving the performance, reliability or servicing of the equipment, Tait International Limited reserves the right to update the equipment or this document or both without prior notice.

Intellectual Property Rights

This product may be protected by one or more patents or designs of Tait International Limited together with their international equivalents, pending patent or design applications, and registered trade marks, for a complete list please check https://www.taitradio.com/our-resources/legal#Intellectual_Property

Environmental Considerations

Tait International Limited is an environmentally responsible company which supports waste minimization, material recovery and restrictions in the use of hazardous materials.

The European Union's Waste Electrical and Electronic Equipment (WEEE) Directive and UK WEEE Regulation 2013 requires that this product be disposed of separately from the general waste stream when its service life is over. For more information about how to dispose of your unwanted Tait product, visit the Tait WEEE website at www.taitcommunications.com/our-resources/compliance#WEEE. Please be environmentally responsible and dispose through the original supplier, or contact Tait International Limited.

Tait will comply with environmental requirements in other markets as they are introduced.

Contents

Preface 7
Scope of Manual 7
Related Documentation 7
Safety and Compliance 7
Document Conventions 8
Acronyms 8
Publication Record 10

Safety and Compliance Information 11
Radio Frequency Exposure Information 11
Radio Frequency Emissions Limits in the USA 12
Radio Frequency Emissions Limits in Canada 12
USA Public Safety Bands 13
Frequency Band Reserved for Distress Beacons 13
Australia and New Zealand Citizens Band 14
Health, Safety, and Electromagnetic Compatibility in Europe 15
Interference with Electronic Devices 16
Potentially Explosive Atmospheres and Blasting Areas 17
Radio Installation and Operation in Vehicles 17
Radio Protection When Charging the Vehicle Battery 17
Electromagnetic Compatibility in European vehicles 18
Unapproved Modifications or Changes to Radio 18
High Radio Surface Temperatures 18

1 Introduction 19
1.1 Frequency Bands 20
1.2 RF Output Power 20
1.3 Accessories 21
1.4 Labels 23
1.5 Specifications 24
1.6 Tait Product Numbering 25
1.6.1 Product Codes 25
1.6.2 Item Part Numbers (IPNs) 28
1.6.3 Type Codes (Compliance Codes) 28

2 General Servicing Information 29
2.1 Repair Recommendations 29

© Tait International Limited June 2023

2.1.1 Repair Categories . . . 29
2.1.2 Required Training, Tools, and Equipment . . . 30
2.1.3 Mean Time To Repair (MTTR) . . . 31
2.1.4 Repair Resources . . . 32
2.2 Tait Support Website . . . 32
2.3 Servicing Precautions . . . 33
2.3.1 Avoid Unauthorized Changes . . . 33
2.3.2 Maintain the Seal on the Radio . . . 33
2.3.3 Protect Screw Thread . . . 34
2.3.4 Torque Correctly . . . 34
2.3.5 Disconnect Looms and FPC Cables Carefully . . . 35
2.3.6 Prevent Scratches . . . 35
2.3.7 Observe ESD Precautions . . . 36
2.3.8 Observe Transmitter Safety Precautions . . . 37
2.4 Tools, Equipment, and Consumables . . . 38
2.4.1 Service Kit . . . 38
2.4.2 Consumables . . . 38
2.5 Radio Connectors . . . 40
2.5.1 Overview . . . 40
2.5.2 RF Connector . . . 43
2.5.3 Power Connector . . . 43
2.5.4 Auxiliary Connector . . . 44
2.5.5 Internal Options Connector . . . 46
2.5.6 Provision for External Options Connector . . . 46
2.5.7 Control Head Connectors . . . 47
2.5.8 Microphone Connector . . . 48
2.5.9 Programming Connector (Programming Control Head) . . . 48
2.6 Shielding Cans and Connectors . . . 49
2.7 SMT Repairs (PCB Components) . . . 54
2.7.1 Obtaining a Replacement PCB Component . . . 55
2.7.2 Tools for SMT Repairs . . . 56
2.7.3 Consumables for SMT Repairs . . . 56
2.7.4 SMT Repair Techniques . . . 57
2.8 Test Equipment . . . 60
2.9 Setting Up the Test Equipment . . . 61
2.10 Programming and Calibration Applications . . . 63
2.11 Upgrading the Radio Firmware . . . 63
2.11.1 Viewing the Firmware Version . . . 63
2.11.2 Upgrading Firmware . . . 63
2.11.3 Installing Firmware . . . 63
2.12 Computer-Controlled Test Mode (CCTM) . . . 64
2.12.1 Placing the Radio in Computer-Controlled Test Mode . . . 64
2.12.2 Entering a CCTM Command . . . 65

© Tait International Limited June 2023

2.12.3 CCTM Commands . . . 66
2.12.4 CCTM Error Codes . . . 70
2.13 Pressing Keys When Turning On the Radio . . . 70
2.14 Visual and Audible Indicators . . . 71
2.14.1 Visible Indicators . . . 71
2.14.2 Audible Indicators . . . 71
2.15 RSSI Performance Characteristics . . . 73

3 Disassembly and Reassembly . . . 74
3.1 Removing and Mounting the Control Head . . . 75
3.2 Disassembling the Radio Body . . . 76
3.3 Reassembling the Radio Body . . . 82
3.4 Disassembling and Reassembling the Control Head . . . 86
3.4.1 Graphical Control Head . . . 86
3.4.2 2- or 3-Digit Control Head . . . 89
3.4.3 Programming Control Head . . . 92
3.4.4 Handheld Control Head . . . 93

4 Servicing Procedures . . . 96
4.1 Initial Tasks . . . 96
4.2 Checking the User Interface . . . 101
4.3 Responding to Error Messages . . . 103
4.4 Checking the Transmit and Transmit-Audio Functions . . . 104
4.5 Check the Receive and Receive-Audio Functions . . . 106
4.6 Final Tasks . . . 108

5 Fault Finding of the Graphical Control Head . . . 114
5.1 Power Supply Faulty . . . 115
5.2 LCD Display Faulty . . . 119
5.3 LCD Backlighting Faulty . . . 122
5.4 LCD Heating Faulty . . . 124
5.5 Function Key LEDs, Status LEDs or Backlighting LEDs Faulty . . . 125
5.6 On/Off Key Faulty . . . 132
5.7 Function, Scroll, or Selection Keys Faulty . . . 134
5.8 Speaker Faulty . . . 136
5.9 Volume Control Faulty . . . 137
5.10 PTT Faulty . . . 139

6 Fault Finding of the 2- or 3-Digit Control Head . . . 141
6.1 Display Faulty but not LEDs . . . 144
6.2 Some LEDs Faulty . . . 145

© Tait International Limited June 2023

6.3 All LEDs Faulty 146
6.4 Display and All LEDs Faulty 146
6.5 Some but not All Keys Faulty 147
6.6 All Keys Faulty 147
6.7 Speaker Faulty 148
6.8 Volume Control Faulty 148

7 Fault Finding of the Hand-Held Control Head 149
7.1 Power Supply Faulty 150
7.2 LCD Display Faulty 156
7.3 LCD Backlighting Faulty 159
7.4 Status LEDs Faulty 161
7.5 Keypad Backlighting Faulty 163
7.6 On/Off Key Faulty 167
7.7 PTT Faulty 169
7.8 Keys Faulty 170
7.9 Microphone Faulty 173
7.10 Communications Faulty 176

8 Spare Parts 179
8.1 Illustrated Spare Parts Catalogue 180

9 TOPA-SV-024 Test Unit 191
9.1 Test Equipment Setup 191
9.2 Operation 193
9.2.1 Rx / Tx/PTT Switch 193
9.2.2 Speaker / Radio / Load Switch 194
9.3 PCB Information 194
9.3.1 Parts List (PCB IPN 220-01418-03) 194
9.3.2 Board Layout 195
9.3.3 Circuit Diagram 196

Tait General Software Licence Agreement 197

© Tait International Limited June 2023

Preface

Scope of Manual

This manual describes repairs to a TM9300 and TM9400 mobile radio.

Because board replacement is often the most cost-effective solution for this radio, no detailed circuit descriptions or faultfinding procedures to board component level are provided for the main board. If you have in-depth product knowledge and intend to perform board-level diagnosis and/or the replacement of board components, please refer to the relevant PCB Information document available on request from Tait Support.

Related Documentation

Downloading Documentation

Download the latest issue of a document from the Tait Support website. See "Tait Support Website" on page 32.

PCB Information Documents

You can request 'PCB Information Documents' from Tait Support. For more information see **"Obtain a PCB Information Document" on page 55**.

Safety and Compliance

For your personal safety please read the important information provided in the "Safety and Compliance Information" on page 11. Do this before using or servicing a TM9300 or TM9400 mobile radio.

© Tait International Limited June 2023

Document Conventions

Please follow exactly any instruction that appears in the text as an ‘alert’. An alert provides necessary safety information as well as instruction in the proper use of the product. This manual uses the following types of alert:

Warning **This alert is used when there is a hazardous situation which, if not avoided, could result in death or serious injury.**

Caution This alert is used when there is a hazardous situation which, if not avoided, could result in minor or moderate injury.

Notice This alert is used to highlight information that is required to ensure procedures are performed correctly. Incorrectly performed procedures could result in equipment damage or malfunction.

This alert is used to highlight significant information that may be required to ensure procedures are performed correctly, or draw your attention to ways of doing things that can improve your efficiency or effectiveness.

>25W

This symbol highlights information that is relevant to radios with a transmit power >25 W.

25W

This symbol highlights information that is relevant to radios with a transmit power of 25 W.

Acronyms

Abbreviation	Description
ADC	Analog-to-Digital Converter
CCTM	Computer-Controlled Test Mode
CMOS	Complementary Metal–oxide Semiconductor
CODEC	Coder-Decoder
CTCSS	Continuous Tone-Controlled Subaudible Signalling
DC	Direct Current
DSP	Digital Signal Processor
ESD	Electrostatic Discharge
ESN	Electronic Serial Number
FPC	Flexible Printed Circuit
FPGA	Field-Programmable Gate Array
GPIO	General Purpose Input/Output

© Tait International Limited June 2023

Abbreviation	Description
GPS	Global Positioning System
IFAMP	Intermediate Frequency Amplifier
IPN	Item Part Number (Tait part number)
LCD	Liquid Crystal Display
LED	Light Emitting Diode
LPF	Low Pass Filter
MMI	Man Machine Interface
NPN	Negative-Positive-Negative
NTC	Negative Temperature Coefficient
PA	Power Amplifier
PCB	Printed Circuit Board
PNP	Positive-Negative-Positive
PTT	Press-to-Talk
RF	Radio Frequency
RSN	Radio Serial Number
RSSI	Received Signal Strength Indicator
SFE	Software Feature Enabler
SMA	Sub-Miniature Version A
SMD	Surface Mount Device
SMPS	Switch Mode Power Supply
SMT	Surface Mount Technology
SPKR	Speaker
UI	User Interface
USB	Universal Serial Bus
VCO	Voltage-Controlled Oscillator

© Tait International Limited June 2023

Publication Record

Issue	Date	Description
1	May 2013	First release
2	December 2013	Information added for the hand-held control head and H5 band. Minor corrections and additions.
3	September 2014	Information added for H7 band and CCTM commands 611 and 612. Pin 15 of the auxiliary connector now defined simply as “ground”. Minor corrections and additions.
4	September 2015	Information added for 2-digit control head, programming control head, L3 band, and RSSI performance characteristics. Minor corrections and additions.
5	May 2016	Information added for G1 band. Updated product code of thermal grease. Updated product code of cutters.
6	November 2016	Information added regarding the transmit band receiver frequency ranges. These have been updated: Transmit frequency range: 757-870MHz Receiver frequency range: 757-776MHz; 850-870MHz.
7	October 2017	General updates: Information added for C0 band.
8	October 2018	Multiple urgent changes.
9	June 2023	Updated table 8.1 (p.181) Updated drawing p.180 Updated section 3.4.2 Updated section 6 Updated section 8 Updated contents page Updated section 2.5.5 - p.44 Updated section 3.2 p.75 Updated section 3.3 - p.83 Updated Safety + Compliance section - p.18 Updated frequency bands for Introduction section p.20, 25, +26 Updated frequency bands for Servicing Procedures section p.110 AUX_GPIO4 is output only

© Tait International Limited June 2023

Safety and Compliance Information

Before servicing the radio, you must read the important safety and compliance information below.

For information about the way your radio operates, see the user's guide or contact your radio provider.

Radio Frequency Exposure Information

For your own safety and to ensure you comply with the United States Federal Communication Commission's (FCC) radio frequency (RF) exposure guidelines, and those from other administrations, please read the following information before using this radio.

Using this Radio

You should use this radio only for work-related purposes (it is not authorized for any other use) and if you are fully aware of, and can exercise control over, your exposure to RF energy. To prevent exceeding RF exposure limits, you must control the amount and duration of RF that you and other people are exposed to.

It is also important that you:

- Do not remove the RF exposure label from the radio.
- Ensure this RF exposure information accompanies the radio when it is transferred to other users.
- Do not use the radio if you do not adhere to the guidelines on controlling your exposure to RF.

Controlling Your Exposure to RF Energy

This radio emits radio frequency (RF) energy or radio waves primarily when calls are made. RF is a form of electromagnetic energy (as is sunlight), and there are recommended levels of maximum RF exposure.

To control your exposure to RF and comply with the maximum exposure limits for occupational/controlled environments, follow these guidelines:

- Do not talk (transmit) on the radio more than the rated transmit duty cycle. This is important because the radio radiates more energy when it is transmitting than when it is receiving.
- While you are transmitting (talking or sending data) on the radio, you must ensure that there is always a distance of 35 inches (0.9m) between people and the antenna. This is the minimum safe distance. For 110W mobiles, the minimum safe distance is 44 inches (1.1m).
- Use the radio only with Tait-approved antennas and attachments, and make only authorized modifications to the antenna otherwise you could damage the radio and violate FCC regulations.

© Tait International Limited June 2023

For more information on what RF energy is and how to control your exposure to it, visit the FCC website at www.fcc.gov/oet/rfsafety/rf-faqs.html.

Compliance with RF Energy Exposure Standards

This two-way radio complies with these RF energy exposure standards and guidelines:

- United States Federal Communications Commission, Code of Federal Regulations (CFR) Title 47 Parts 1.1307, 1.1310, and 2.1091.
- American National Standards Institute (ANSI) / Institute of Electrical and Electronic Engineers (IEEE) C95.1-1992.
- Institute of Electrical and Electronic Engineers (IEEE) C95.1-1999 Edition.
- European Directive 2008/40/EC on minimum health and safety requirements regarding the exposure of workers to the risks arising from physical agents (electromagnetic fields).

This radio complies with the IEEE and ICNIRP exposure limits for occupational/controlled RF exposure environments at operating duty factors of up to 50% talk to 50% listen.

Radio Frequency Emissions Limits in the USA

CFR Title 47 Part 15.19 (a) (1) - Receivers

Part 15 of the FCC Rules imposes RF emission limits on receivers.

This radio complies with Part 15 of the FCC Rules. Operation is subject to the condition that this device does not cause harmful interference.

CFR Title 47 Part 15.19 (a) (3) - All Others

This device complies with Part 15 of the FCC Rules. Operation is subject to the following two conditions. (1) This device may not cause harmful interference, and (2) This device must accept any interference received, including interference that may cause undesired operation.

Radio Frequency Emissions Limits in Canada

This device complies with Industry Canada licence exempt RSS standard(s). Operation is subject to the following two conditions: (1) this device may not cause interference, and (2) this device must accept any interference, including interference that may cause undesired operation of the device.

© Tait International Limited June 2023

USA Public Safety Bands

The Code of Federal Regulations (CFR) Title 47 Subpart R deals with the use of frequencies in the 757 to 776 MHz and 794 to 806 MHz bands.

Low-power channels

This radio complies with CFR Title 47 Parts 90.531 (b) (3) and 90.531 (b) (4). These sections state that only low-power transmission is permitted on the following channels:

- Regional Planning channels, as defined in Part 90.531 (b) (3).
- Itinerant channels, as defined in Part 90.531 (b) (4).

Use of Encryption

This radio complies with CFR Title 47 Part 90.553 (a). This section states that:

- Encryption is not permitted on the nationwide Interoperability calling channels. These channels are defined in Part 90.531 (b) (1) (ii).
- Radios using encryption must have a readily accessible switch or control to allow the radio user to disable encryption.

Frequency Band Reserved for Distress Beacons

Frequency band 406 to 406.1 MHz is reserved for use by distress beacons. Transmissions should not be made within this frequency band.

© Tait International Limited June 2023

Australia and New Zealand Citizens Band

AS/NZS 4365 deals with the use of frequencies in the 476.425 to 477.4125 MHz band. Products capable of operating in this band have been approved for operation in the UHF Citizens Band Radio Service which is licensed in Australia by the ACMA Radiocommunications (Citizens Band Radio Stations) Class Licence and in New Zealand by the MBIE General User Radio Licence for Citizens Band Radio. Operation is subject to conditions contained within those licences.

Repeaters operate by receiving a transmission on one channel and re-transmitting it on another. Operators are required to avoid using local repeater input channels, which will be in the range of 31 to 38 (and 71 to 78 when authorized), unless it is intended to use the repeater facility, and to avoid using local repeater output channels, which will be in the range 1 to 8 (and 41 to 48 when authorized), at any time. Operators must always listen in on a channel (or observe a channel-busy indicator) to ensure it is not already being used before transmitting.

No voice transmissions are permitted on data channels 22 and 23. Equipment meeting this standard will inhibit voice operation on channels 22 and 23.

Operators must be aware of the consequences of narrowband (2.5 kHz deviation) transmissions being received on older wideband equipment, and wideband (5.0 kHz deviation) transmissions being received on newer narrowband equipment. They should also be aware of the possibility of interference due to older equipment being operated on channels adjacent to new narrowband channels. The list of currently authorized channels can be obtained from the ACMA website in Australia and the MBIE website in New Zealand.

In Australia:

- Except in an emergency, a CB transmitter must not be operated on UHF channels 5 and 35.
- Channel 11 is the customary calling channel for establishing communications.
- Channel 40 is the customary road vehicle channel.

© Tait International Limited June 2023

Health, Safety, and Electromagnetic Compatibility in Europe

In the European Community, radio and telecommunications equipment is regulated by Directive 1999/5/EC, also known as the Radio and Telecommunications Terminal Equipment (R&TTE) directive.
The requirements of this directive include protection of health and safety of users, as well as electromagnetic compatibility.

Intended Purpose of Product

This product is an FM radio transceiver. It is intended for radiocommunication in the Private Mobile Radio (PMR) or Public Access Mobile Radio (PAMR) services, to be used in all member states of the European Union (EU) and states within the European Economic Area (EEA).

Restrictions

This product can be programmed to transmit on frequencies that are not harmonized throughout the EU/EEA, and will require a licence to operate in each member state.

This product can be programmed for frequencies or emissions that may make its use illegal. Where applicable, a license must be obtained before this product is used. All license requirements must be observed. Limitations may apply to transmitter power, operating frequency, channel spacing, and emission.

Declaration of Conformity

Brief Declarations of Conformity appear on page 2 of this document.
To download the formal declaration of conformity, go to www.taitradio.com/eudoc.

© Tait International Limited June 2023

Interference with Electronic Devices

Warning **Some electronic devices may be prone to malfunction due to a lack of protection from the RF energy that is present when your radio is transmitting.**

Examples of electronic devices that may be affected by RF energy are:

- aircraft electronic systems
- vehicular electronic systems such as fuel injection, anti-skid brakes, and cruise control
- medical devices such as pacemakers and hearing aids
- medical equipment in hospitals or health care facilities.

Switch off the radio before boarding an aircraft. Using your radio while in the air is not permitted.

Consult the manufacturer (or its representative) of any such electronic devices to determine whether electronic circuits in those devices will perform normally when the radio is transmitting.

If you have a pacemaker:

- immediately turn off the radio if you suspect it is interfering with the pacemaker
- keep the radio at least 6 inches (15 cm) from the pacemaker while the radio is on
- use the radio on your right side to minimize interference
- never carry the radio in a breast pocket.

If there is interference between your hearing aid and the radio, please discuss an alternative solution with the hearing aid manufacturer.

© Tait International Limited June 2023

Potentially Explosive Atmospheres and Blasting Areas

Warning **Unless the radio is specifically certified for use in a potentially explosive atmosphere, turn off the radio before entering such an atmosphere. An explosion could cause serious injury or death. Examples of potentially explosive atmospheres include filling stations, and any environment where there are flammable liquids, gases, or dusts.**

Warning **Turn off the radio before approaching blasting caps, a blasting area, or any area where you are instructed to turn off a two-way radio. Obey all signs and instructions. Interference with blasting operations could cause serious injury or death.**

Radio Installation and Operation in Vehicles

Warning **Keep the radio away from airbags and airbag deployment areas. Do not install, charge, or place a radio near such areas. An activated airbag can propel radio equipment with sufficient force to cause serious injury to vehicle occupants. An airbag may not perform to specification if obstructed by radio equipment.**

Warning **To avoid damage to existing wiring, airbags, petrol tanks, fuel and brake lines, or battery cables, refer to the installation guide for the radio, and to the vehicle manufacturer's manual, before installing electronic equipment in the vehicle.**

Using a handheld microphone or a radio while driving a vehicle may violate the laws and legislation that apply in your country or state. Please check the vehicle regulations in your area.

Radio Protection When Charging the Vehicle Battery

Always remove the fuses from the radio power cable before charging the vehicle battery, connecting a second battery, or using power from another vehicle (e.g. when jump-starting the vehicle).

© Tait International Limited June 2023

Electromagnetic Compatibility in European vehicles

In the European Community, radio equipment fitted to automotive vehicles is regulated by Directive 72/245/EEC and its amendments. The requirements of this directive cover the electromagnetic compatibility of electrical or electronic equipment fitted to automotive vehicles.

Mobile radios only: To meet the requirements of Directive 72/245/EEC and its amendments, installation of this product in a vehicle must be performed according to the instructions provided by the vehicle manufacturer.

Notice Failure to install the product correctly may void the vehicle's type-approval. The owner could be held responsible for any damage resulting from vehicle failure that can be attributed to RF energy interfering with the vehicle systems.

Unapproved Modifications or Changes to Radio

The radio is designed to satisfy the applicable compliance regulations. Do not make modifications or changes to the radio that are not expressly approved by Tait International Limited. Failure to do so could invalidate compliance requirements and void the user's authority to operate the radio.

High Radio Surface Temperatures

Caution The bottom surface of the radio and the heatsink fins can become hot during prolonged operation. Do not touch these parts of the radio.

EN 62368 Requirements (25 Watt Mobiles)

This radio complies with the European Union standard EN 62368 when operated up to the rated 33% duty cycle of two minutes transmit and four minutes receive, and with ambient temperatures of 30 °C or lower.

Caution Operation outside these limits may cause the external temperature of the radio to rise higher than this standard permits.

© Tait International Limited June 2023

1 Introduction

The TM9300 and TM9400 series is a range of high-performance microprocessor-controlled DMR and P25 mobile radios for voice and data communication. The radios are designed for installation in vehicles but can also be used in desktop, remote-monitoring and similar applications.

Figure 1.1 TM9300 and TM9400 mobile radios

1.1 Frequency Bands

The radio is available with the following frequency bands:

- VHF
  - 136 MHz to 174 MHz (B1)
  - 174MHz to 225MHz (C0)
- UHF
  - 320 MHz to 380 MHz (G1)
  - 378 MHz to 470 MHz (HK)
  - 450 MHz to 520 MHz (H7)
  - 757 MHz to 870 MHz transmit,
    757 MHz to 776 MHz and 850 MHz to 870 MHz receive (K5)
  - 896 MHz to 941 MHz transmit,
    935 MHz to 941 MHz receive (L3)

A different main board is used to implement each band; the rest of the radio remains the same. For an explanation of how the product code identifies the frequency band see "Tait Product Numbering" on page 25.

1.2 RF Output Power

The radio bodies are available with >25 W and 25 W RF output power. The two RF output power options are implemented by different main boards in the radio body, mechanically different radio bodies, and different power connectors. For information on which control head is currently available with each radio model, contact your regional Tait office.

>25W

The >25 W radio is available in the following frequency bands:

- B1 (50 W)
- HK (40 W)
- H7 (40 W)
- K5 (35 W/30 W)
- L3 (30 W)

25W

The 25 W radio is available in the following frequency bands:

© Tait International Limited June 2023

- B1
- C0
- G1
- H5[1]
- H7[1]

1.3 Accessories

The TM9300 and TM9400 mobile radios can be used with an extensive range of audio accessories, installation kits, internal options boards and other accessories such as a desktop power supply.

For an up-to-date list of compatible accessories, please go to the TM9300 and TM9400 areas of the Tait website, www.taitradio.com.

Audio Accessories

The radios allow for the connection of a comprehensive range of audio accessories:

- rugged microphone (standard)
- desktop microphone
- keypad microphone
- handset
- high-power remote speaker
- horn speaker
- remote PTT kit and hands-free kit.

Installation Kits

The radio is delivered with a vehicle installation kit, including a U-bracket. Installation of the radio is described in the installation guide (MMB-00002-xx).

Optional installation kits are:

- remote control head kit for remote installation of the control head
- dual control head installation kit for remote installation of two control heads connected to one radio body
- hand-held control head installation kit
- hand-held control head installation kit for remote/covert installation
- security bracket for secure and quick-release installation
- ignition-sense kit.

An overview of these installation options is contained in the installation guide (MMB-00002-xx).

1. Radios approved for operation on the Australia and New Zealand Citizens Band have a maximum RF output power of 5 W.

© Tait International Limited June 2023

Internal Options Boards

The radio provides space for an internal options board inside the radio body connecting to an internal options connector. An aperture for an external options connector is also provided.

Tait offers the following internal options boards:

- line-interface board
- RS-232 board
- options-extender board.

Desktop Power Supply

A desktop power supply including the parts for mounting the radio is available for desktop installations.

© Tait International Limited June 2023

1.4 Labels

Radio Body

The following labels are attached to the radio body:

- compliance information
- serial number and product code
- hot surface safety warning
- RF exposure safety warning

Figure 1.2 Labels of the TM9300/TM9400 radio body

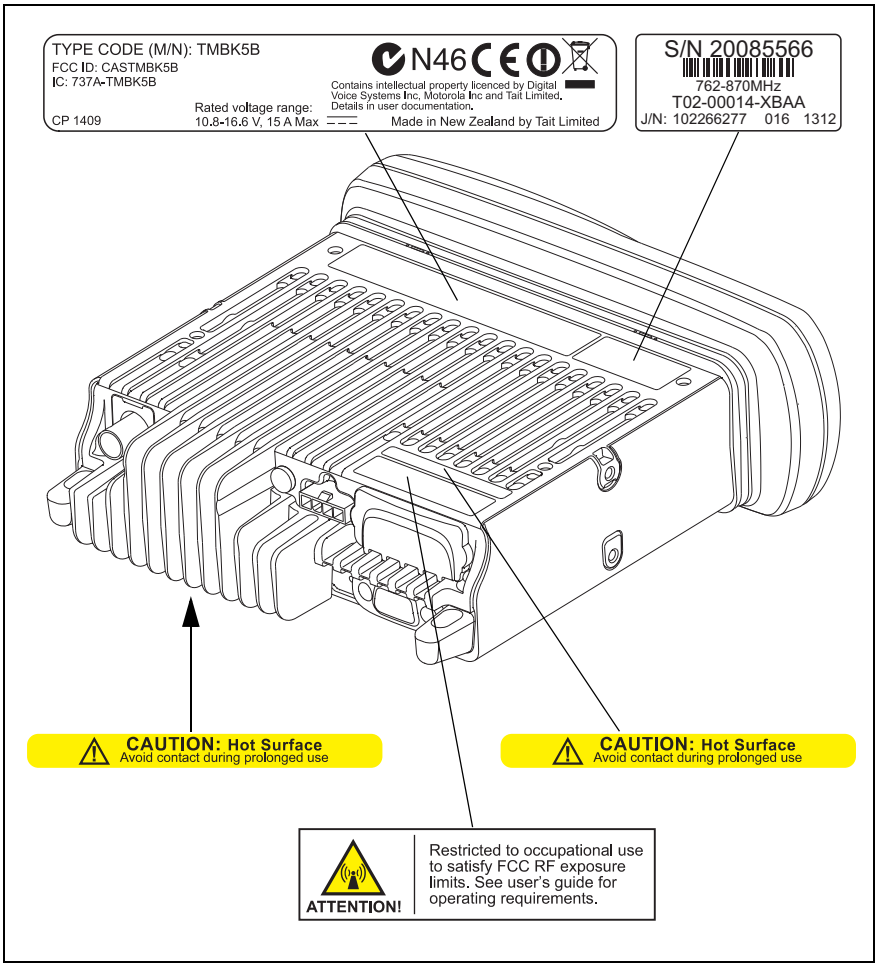

Control Head

The control head label provides the product code and serial number.

PCBs

The PCB label provides important information about the board assembly it is attached to. **Do not remove the PCB labels**.

Figure 1.3 Information on a PCB label

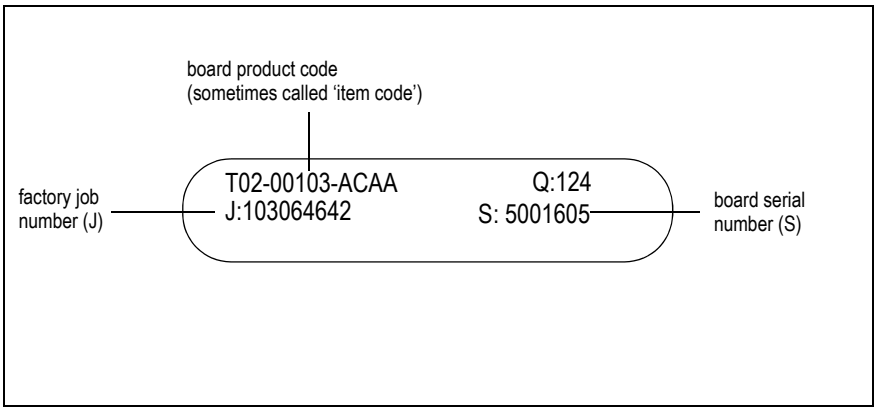

1.5 Specifications

For current specifications, please refer to the latest issue of the appropriate specifications manual:

- TM9300 Specifications Manual - MMB-00005-xx
- TM9400 Specifications Manual - MMB-00009-xx.

© Tait International Limited June 2023

1.6 Tait Product Numbering

Tait uses different coding schemes for products, subassemblies and individual parts.

1.6.1 Product Codes

For the TM9300 and TM9400 mobile radios, the Tait product codes follow the format **T02-nnnnn-XXXX**, where

- ‘T02’ identifies the code to be for a mobile radio
- ‘nnnnn’ (numeric) identifies the type of product or subassembly (see Table 1.1 below)
- ‘XXXX’ (alphabetic or numeric) identifies the configuration

nnnnn

The five numeric digits identify **what the product is**, for example, a DMR radio. Table 1.1 lists the ‘nnnnn’ value for some TM9300 and TM9400 products.

Table 1.1 ‘nnnnn’ in the TM9300/TM9400 product range

Product code	Product
T02-000**11**-XXXX	TM9300 radio body (restricted functionality)
T02-000**12**-XXXX	TM9300 radio body (full functionality)
T02-000**13**-XXXX	TM9400 radio body (restricted functionality)
T02-000**14**-XXXX	TM9400 radio body (full functionality)
T02-000**02**-XXXX	TM9300 main board
T02-000**06**-XXXX	TM9400 main board
T02-000**71**-XXXX	TM9300/TM9400 graphical control head
T02-000**73**-XXXX	TM9300/TM9400 hand-held control head
T02-000**76**-XXXX	TM9300 2-digit control head
T02-000**85**-XXXX	TM9300 programming control head

© Tait International Limited June 2023

XXXX

The final four alphabetic or numeric digits of the product code describe how this particular instance of the product is configured.

In the product code of a **radio body**, such as:

- T02-000**11**-XXXX (TM9300, restricted functionality)
- T02-000**12**-XXXX (TM9300, full functionality)
- T02-000**13**-XXXX (TM9400, restricted functionality)
- T02-000**14**-XXXX (TM9400, full functionality)

XXXX defines:

X	X	X	X	
		Software Features		
		A	A	**Default**
	RF connector and factory-placed options			
	A	BNC	No options fitted	
	B		Voice storage	
	N	Mini UHF	No options fitted	
	P		Voice storage	
Transmit power and frequency band				
B	25W	136 to 174 MHz (B1)		
C		174 to 225 MHz (C0)		
F		320 to 380 MHz (G1)		
H		450 to 520 MHz (H7)		
J		400 to 470 MHz (H5)		
P	>25W	136 to 174 MHz (B1)		
R		378 to 470 MHz (HK)		
V		450 to 520 MHz (H7)		
W		400 to 470 MHz (H5)		
X		757 MHz to 870 MHz transmit, 757 MHz to 776 MHz and 850 MHz to 870 MHz receive (K5)		
Y		896 MHz to 941 MHz transmit, 935 MHz to 941 MHz receive (L3)		

Not all frequency bands may be available for TM9300 and TM9400.

© Tait International Limited June 2023

In the product code of a **TM9300 or TM9400 control head**, such as:

- T02-0007**1**-XXXX

XXXX defines:

X	X	X	X	
			Label and lens	
			A	TM9300, black Tait lens
			B	TM9400, black Tait lens
		Colour		
		A	Black	
	Reserved			
	A	Default		
Local/remote configuration				
A	Local			
C	Primary remote, terminated, NTID=2 (single or dual head)			
D	Secondary remote, not terminated, NTID=4 (dual head)			
E	Secondary remote, terminated, NTID=4 (dual head)			

In the product code of a **main board**, such as

- T02-000**02**-XXXX (TM9300)
- T02-000**06**-XXXX (TM9400)

XXXX defines:

X	X	A	A	
		Interface variants		
		A	A	**Default**
	Factory-placed options			
	A	No options fitted		
	B	Voice storage		
Transmit power and frequency band				
B	25W	136 to 174MHz (B1)		
C		174 to 225MHz (C0)		
F		320 to 380 MHz (G1)		
H		450 to 520MHz (H7)		
J		400 to 470MHz (H5)		
P	>25W	136 to 174MHz (B1)		
R		378 to 470 MHz (HK)		
V		450 to 520MHz (H7)		
W		400 to 470MHz (H5)		
X		757MHz to 870MHz transmit, 757MHz to 776MHz and 850MHz to 870MHz receive (K5)		
Y		896MHz to 941MHz transmit, 935MHz to 941MHz receive (L3)		

ⓘ The type of antenna connector (mini-UHF or BNC) is configured at radio body level.

© Tait International Limited June 2023

1.6.2 Item Part Numbers (IPNs)

A 10-digit number in the format xxx-xxxxx-xx identifies a Tait Item Part Number (IPN). Although you can quote an IPN to order a part, it is usually best to order the spares kit that contains that part. For more information refer to "Spare Parts" on page 179.

In a part number, the -xx represents the **issue number**. Unless otherwise indicated, you can generally order only the most recent issue of a part.

On a board, the last two digits of the IPN represent the issue number of the PCB used: this also indicates which PCB Information applies. See also **"Obtain a PCB Information Document" on page 55**.

1.6.3 Type Codes (Compliance Codes)

In addition to a product code, each radio also has a type code, often identified on the product by the word 'Type'. The type code is a regulatory compliance code that identifies the unique characteristics of each individual radio.

The type code is printed on the label on the bottom side of the radio body. See Figure 1.2 on page 23.

The characters used in the type code are numeric or uppercase alphabetic. The type code consists of six or eight characters in the format:

TMBcdxyy

where:

T = Tait
M = mobile radio
B = TM9300/TM9400 series
cd = the frequency band of the radio (see "Frequency Bands" on page 20)
x = a unique character representing the distinct set of compliance attributes that belong to this radio

There is no immediate or obvious association between the characters used for x and yy, and the attributes they signify. They are simply a code.

© Tait International Limited June 2023

2 General Servicing Information

This chapter provides information that will enable you to service a TM9300 and TM9400 radio. It includes the following sections:

- Repair Recommendations
- Tait Support Website
- Servicing Precautions
- Tools, Equipment, and Consumables
- Radio Connectors
- Shielding Cans and Connectors
- SMT Repairs (PCB Components)
- Test Equipment
- Setting Up the Test Equipment
- Programming and Calibration Applications
- Computer-Controlled Test Mode (CCTM)
- Pressing Keys When Turning On the Radio
- Visual and Audible Indicators

2.1 Repair Recommendations

Notice Tait recommends that warranty repairs be performed at a regional Tait office or at the Global Repair Centre.

2.1.1 Repair Categories

Repairs were previously designated ‘Level 1’, ‘Level 2’, or ‘Level 3’, with restrictions on who could perform each level of repair.

These categories no longer apply and you are able to perform a repair if properly equipped and trained to do so. See “Required Training, Tools, and Equipment” on page 30.

Dealers, distributors, and customers who have their own servicing facilities are encouraged to perform repairs, but to escalate complex or unsuccessful repairs to your regional Tait office for resolution.

Regional Tait offices handle repairs that require more advanced capabilities. In addition to specialized skills, up-to-date product and procedure knowledge, and specialized equipment, the regional Tait offices also have ready access to parts and spares.

© Tait International Limited June 2023

The **Global Repair Center** delivers advanced support and expertise to the regional Tait offices. An experienced and fully equipped service team handles repairs submitted by the regional Tait offices.

TM9300/TM9400 Tasks

TM9300/TM9400 servicing includes tasks of varying degrees of difficulty, from simple to more complex. Simple tasks include, for example:

- upgrading the firmware on the radio
- programming, calibrating, or configuring the radio, including customizing encryption settings
- using a spares kit, where one exists, to replace mechanical or electro-mechanical parts such as:
  - the keypad (replace the control head assembly)
  - the main board or control head board (replace the board assembly)
- fitting an options board.

More complex tasks include:

- faultfinding and diagnosing board-level components
- replacing board components for which no spares kit or instructions are yet available
- performing advanced reconfiguration.

2.1.2 Required Training, Tools, and Equipment

Notice Do not attempt a repair that is beyond your current capabilities or you could cause permanent damage to the radio.

To repair a TM9300 or TM9400, you require:

- Relevant and current product training.
- The instructions provided by the latest issue of this service manual and the documentation it references.
- Tools, spares kits, and equipment specific to the repair are identified in this service manual. These may include:
  - Standard service centre tools and equipment
  - an anti-static work area, see page 36
  - a service kit (see page 38), which also provides an assembly toolkit containing the necessary special drivers and bits.
  - product-specific consumables, see page 38
  - relevant test equipment, see page 60
  - the programming and calibration applications running on a test computer, see page 63

© Tait International Limited June 2023

For board-level repairs you will also require:

- in-depth product knowledge
- the correct issue of the PCB Information document for the board under repair, see "Obtain a PCB Information Document" on page 55
- expertise in SMT repair of circuit boards, see "SMT Repairs (PCB Components)" on page 54
- relevant SMT repair tools and consumables, see "Tools for SMT Repairs" on page 56 and "Consumables for SMT Repairs" on page 56

2.1.3 Mean Time To Repair (MTTR)

Industry best practice is to provide a Mean Time To Repair (MTTR) for each product. The MTTR is an estimate of the average time needed to isolate and correct a fault in the product. It includes troubleshooting and diagnosing, disassembling the unit, replacing faulty part(s), reassembling the unit, configuration and testing, and completing administrative tasks.

ⓘ A repair is generally considered cost-effective only if it can be completed within the MTTR time frame. The cost of a repair, in parts and labour, must never exceed the cost of a replacement unit.

MTTR

The recommended maximum repair time for any one repair to a TM9300/TM9400 is a total of one hour, comprising:

- 20 minutes to diagnose the fault
- 20 minutes to do the repair
- 20 minutes to recalibrate and test the radio.

Before starting a repair, best practice is to establish whether you can, within the MTTR times specified:

- positively identify the problem
- determine the solution
- complete the repair and related testing.

A fault that has a known or readily identifiable cause and a clear solution (generally using a spares kit) can usually be resolved within the MTTR.

If a repair is likely to exceed the MTTR, contact your regional Tait office. It will have the necessary expertise and specialized equipment to complete the repair or suggest replacement as a more cost-effective option.

© Tait International Limited June 2023

2.1.4 Repair Resources

Increasingly sophisticated products can be difficult and time-consuming to service. To assist you, Tait provides:

- detailed servicing instructions
- comprehensive product training
- advanced assistance through regional Tait offices, see page 29
- the Tait Support website.

2.2 Tait Support Website

You can download the latest issue of the programming and calibration applications, radio firmware, and any released documentation (including user documentation in other languages) from the TM9300 and TM9400 area of the Tait Support website, http://support.taitradio.com

For information on downloading radio firmware, contact Tait.

If you cannot see the item you are looking for, it may be available only from the secured area of the website.

Requesting Access

Tait Support will supply the login information. The **Single Sign-On** feature automatically assigns an appropriate level of access. When you log in to the secured area, all relevant TM9300 and TM9400 servicing documentation is available to you.

Tip: If you have registered but cannot see the Username and Password fields along the top of the screen, click Show Single Sign-On Bar at the top right corner of the main page.

© Tait International Limited June 2023

2.3 Servicing Precautions

For your safety and to prevent damage to the radio, the following precautions are recommended.

2.3.1 Avoid Unauthorized Changes

This radio is designed to satisfy stringent compliance regulations. Make a change to the radio only if the change is expressly approved by Tait. See also "Repair Recommendations" on page 29.

Notice Unauthorized changes could violate compliance requirements and/or void the customer's authority to operate the radio.

2.3.2 Maintain the Seal on the Radio

The TM9300/TM9400 is uniquely designed to meet published specifications for protection against entry ('ingress') by water and dust. Be aware of this point of difference when servicing the radio.

The mobile radio requires informed handling. Disassemble and reassemble the radio in strict accordance with Chapter 3, Disassembly and Reassembly. Instructions in that chapter identify where extra care is required.

To maintain the sealing of the radio to IP54 standards, ensure that all bungs and seals are fitted after servicing the radio. These are for the auxiliary, RF, external options, and programming connectors:

- bung for auxiliary connector
- rubber seal for RF connector
- bung for aperture for options connector (connector not fitted)
- cover seal for options connector (connector fitted).

In addition, ensure that the grommet sealing the aperture to the microphone connector of the control head is properly fitted.

© Tait International Limited June 2023

2.3.3 Protect Screw Thread

For a description of the screws used in each radio assembly, see Chapter 3, Disassembly and Reassembly.

A hole in a new chassis or front panel starts as a simple hole without a thread. When a screw is tightened in the hole for the first time, that screw cuts the thread. To prevent damage to the screw holes on this radio, always re-use the same thread:

1. Before tightening a screw, place the screw in the hole and wind the screw slowly backwards (counter-clockwise) while exerting a gentle downward pressure on the driver.
2. When you feel the screw engage with the thread that was cut before, stop. Start winding the screw gently forwards (clockwise).
3. Tighten the screw and then torque to specification.

2.3.4 Torque Correctly

When tightening a screw or nut, apply the exact torque specified in the reassembly instructions. Under-torquing can cause problems with microphonics and heat transfer; over-torquing can damage the radio.

For the torque drivers needed to service this radio see Chapter 3, Disassembly and Reassembly.

For the screws used in this radio and the torque to apply to each screw see described in the diagrams in Chapter 3, Disassembly and Reassembly.

© Tait International Limited June 2023

2.3.5 Disconnect Looms and FPC Cables Carefully

When disconnecting a wire loom or an FPC cable from a board, do not apply excessive pressure to either the loom wires or the connector clip. If you do, the connector clip will pop off the board and you will have to order and install a new connector which includes the clip.

Figure 2.1 Disconnecting looms and FPC cables

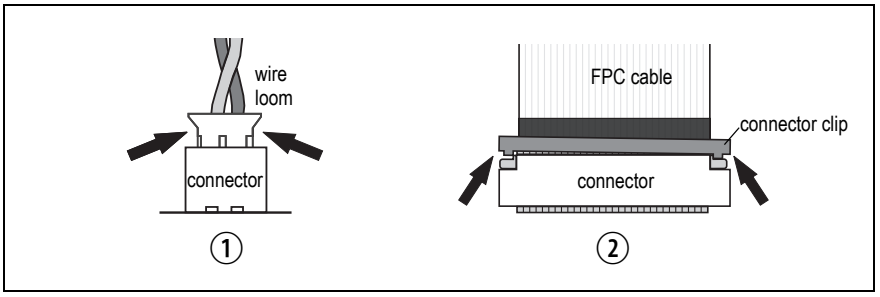

In the example shown in ①, use pliers to pull directly on the plastic connector in the area indicated by the arrows. Do not pull directly on the wires, as this will damage the loom.

In the example shown in ②, use your fingers or tweezers to loosen, but not fully remove, the connector clip that locks the FPC cable in place. Work the connector clip loose by sliding first one side of the clip and then the other gently away from the connector. The clip is loosened, but should remain attached to the connector. You can then slide the FPC cable out from the connector.

2.3.6 Prevent Scratches

Protect the mechanical parts of the radio from scratches by working on a cleared area of a non-scratch bench top. The bench top must also meet the anti-static requirements outlined below.

© Tait International Limited June 2023

2.3.7 Observe ESD Precautions

For information about anti-static precautions and the dangers of electrostatic discharge, refer to standards such as ANSI/ESD S2 0.20 and BS EN 100015-4 or go to the Electrostatic Discharge Association website www.esda.org/.

Notice This equipment contains devices that are susceptible to damage from electrostatic discharge (ESD). Handle every device carefully and in strict accordance with the procedures defined in the data book provided by the manufacturer.

Anti-Static Bench Kit

Tait recommends that you buy an **anti-static bench kit** from a reputable manufacturer. The bench must have:

- a dissipative rubber bench top
- a conductive wrist strap
- a connection to ground.

Install and test the bench kit in accordance with the manufacturer's instructions. See Figure 2.2.

Figure 2.2 Typical anti-static bench setup

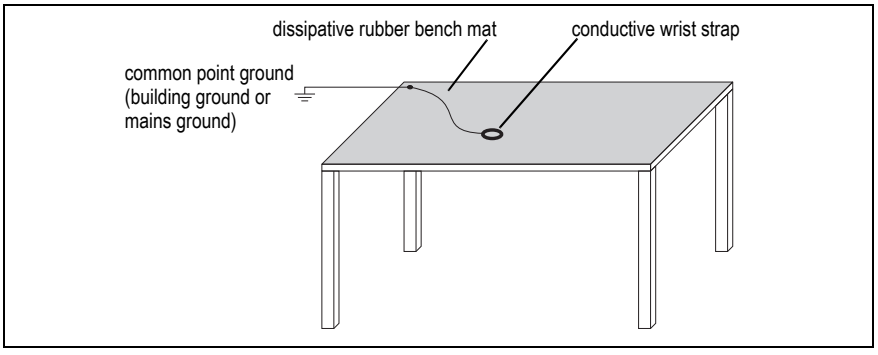

Carrying, Storing, or Shipping Components

Also take strict anti-static measures when **carrying, storing, or shipping** a circuit board or its components:

- To carry, store, or ship a circuit board use an anti-static bag.
- To carry, store, or ship a component use foil, an anti-static bag, or an anti-static tube.

You can also use an anti-static tray to carry a circuit board or component.

© Tait International Limited June 2023

2.3.8 Observe Transmitter Safety Precautions

To prevent injury or damage during test transmissions, general servicing, and transmitter faultfinding, carefully observe the following transmitter safety precautions.

Caution Do not touch the antenna while the transmitter is operating, or you may receive RF burns.

Notice Do not allow the radio to overheat during test transmissions. Excessive heat may damage the radio. See below.

To protect against overheating:

- After completing a measurement or test that requires activation of the transmitter, immediately return the radio to receive mode. If you must extend transmission time, consider disabling the PA and/or driver. Do this by removing the gate or drain feeds, or use CCTM commands **30** and **31**.
- Secure the main-board assembly in the chassis with the two external screws and one of the internal screws. The heat-transfer block must be secured to the main board. The lid of the radio body may be left off. After completing any measurement or test requiring activation of the transmitter, immediately return the radio to the receive mode.

Notice Do not operate the transmitter without a suitable antenna load. The radio is designed to operate with a 50Ω termination impedance. Transmitting without a suitable load can damage the power output stage of the transmitter.

Notice Ensure that all instruments are protected at all times from accidental transmissions. Under certain circumstances, the microprocessor can activate the transmitter.

While servicing, do not program or operate the transmitter on a reserved frequency band. 156.8 MHz ±375 kHz, 243 MHz ±5 kHz, and 406.0 to 406.1 MHz are reserved worldwide for use by distress beacons.

© Tait International Limited June 2023

2.4 Tools, Equipment, and Consumables

Use the kits and tools described here when servicing a mobile radio. See also "Tait Support Website" on page 32.

2.4.1 Service Kit

The **TM8000/TM9000 Service Kit (T02-00031-0007)** includes:

- the special tools needed to service the radio
- a test unit, and the items needed to connect a radio to a test unit
- the programming and calibration cables and adapters

Table 2.1 shows the contents the kit.

Table 2.1 Contents of the TM8000/TM9000 Service Kit (T02-00031-0007)

Product code	Item
TMAA20-03	Cable (25 W power connector to banana plugs plus speaker connector)
TMAA23-02	Cable (>25 W power connector to banana plugs plus speaker connector)
TMAA20-04	Cable (RJ12 socket to RJ45 plug)
TMAA21-01	Cable (DB15 socket to RJ45 plug plus speaker connector)
T03-00118-0601	Programming cable (USB to RJ11)
TOPA-SV-024	Test unit

2.4.2 Consumables

Thermal Grease

If you remove the RF board from the chassis, or disassemble the main-board assembly, you will need to check that the thermal grease on the underside of the main board (> 25 W) and the heat-transfer block has not been contaminated. If the thermal grease is contaminated, or if the RF board has been replaced, the thermal grease must be re-applied.

Notice Thermal grease is essential to the proper operation of the radio. **Do not omit to apply it**.

Caution Keep thermal grease away from your eyes. Contact with this product may cause temporary redness and discomfort of the eye. If contact occurs, immediately flush the affected eye with clean water. Do not expose your skin to thermal grease for extended periods. Prolonged contact with this product may cause skin irritation. If skin irritation occurs, use soap and water to wash the affected skin.

© Tait International Limited June 2023

Thermal grease is a white grease that helps protect sensitive components from overheating. By filling surface irregularities and air voids, thermal grease increases heat transfer to the heat sink. Thermal grease is used to transfer heat away from the transmitter circuitry.

Thermal grease is available in a 142 g squeeze tube, and to order quote IPN 490-11302-00.

For details of how to apply the thermal grease, see "Fitting the Main-Board Assembly to the Chassis" on page 84.

© Tait International Limited June 2023

2.5 Radio Connectors

This section describes the specifications and pinouts of the connectors of the radio body and the control head.

2.5.1 Overview

Figure 2.3 provides an overview of the connectors:

Figure 2.3 Connectors (radio with graphical control head)

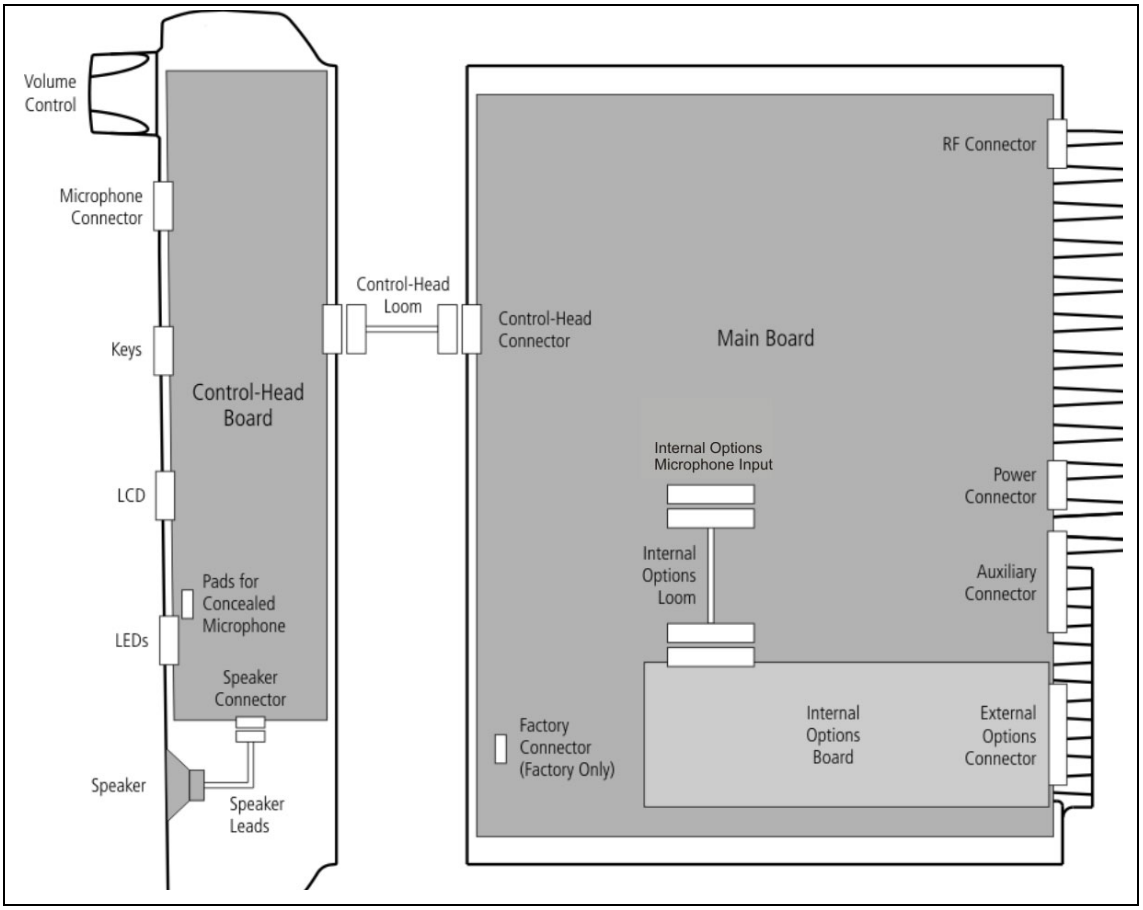

Figure 2.4 shows the connectors of the radio body.
Figure 2.5 shows the connectors of the control head.

For information on the factory connector of the main board and the internal connectors of the control head, refer to the PCB information of the main boards and the control head board.

© Tait International Limited June 2023

Figure 2.4 Connectors of the radio body (25W radio)

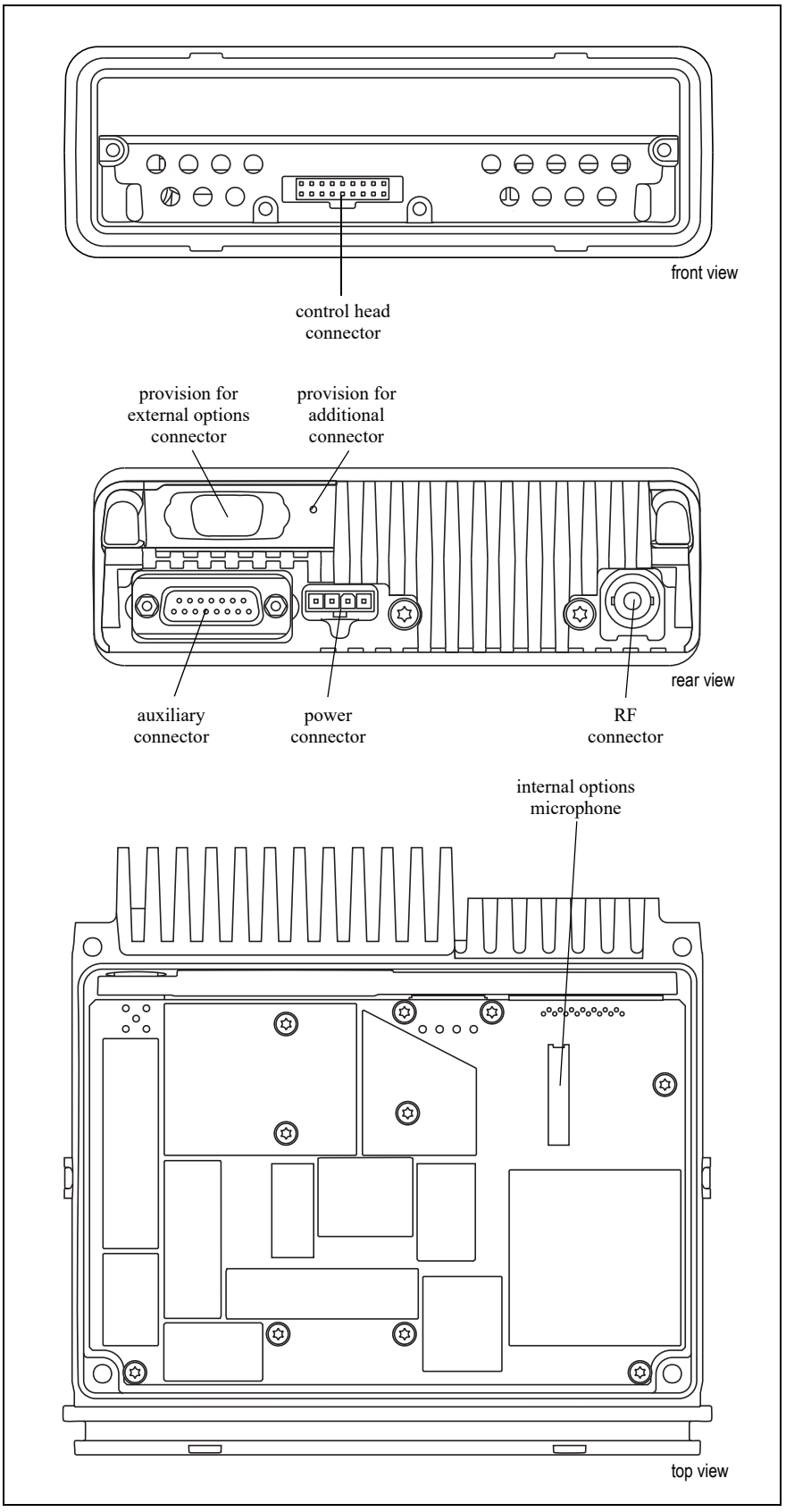

Figure 2.5 Connectors of the graphical control head

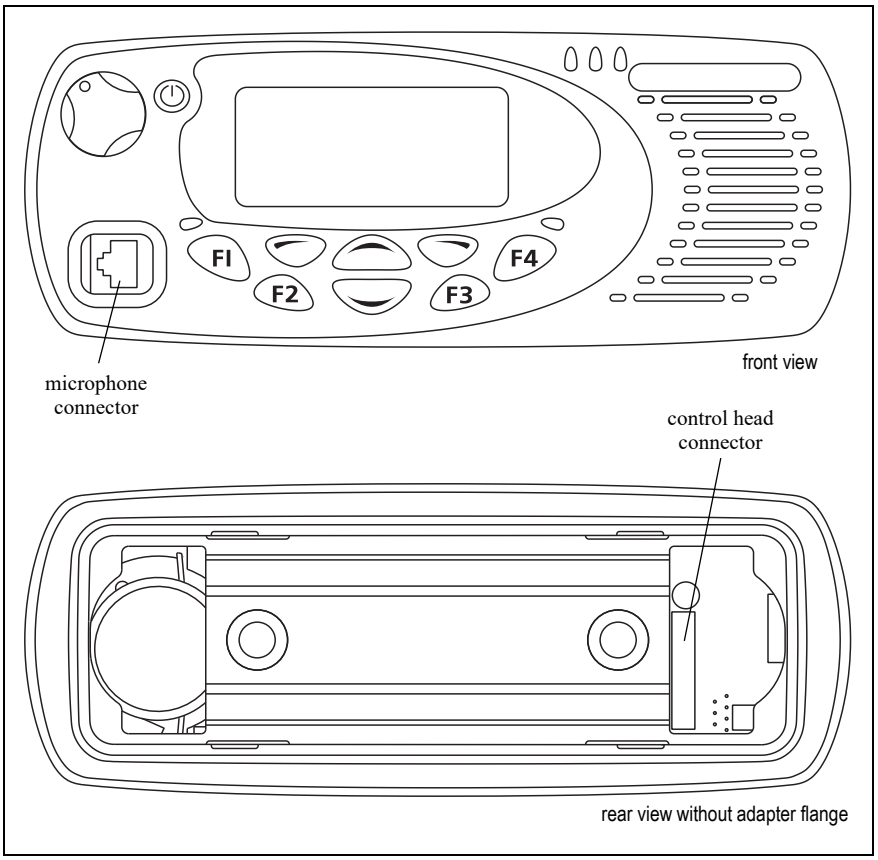

Figure 2.6 Connectors of the 2-digit control head

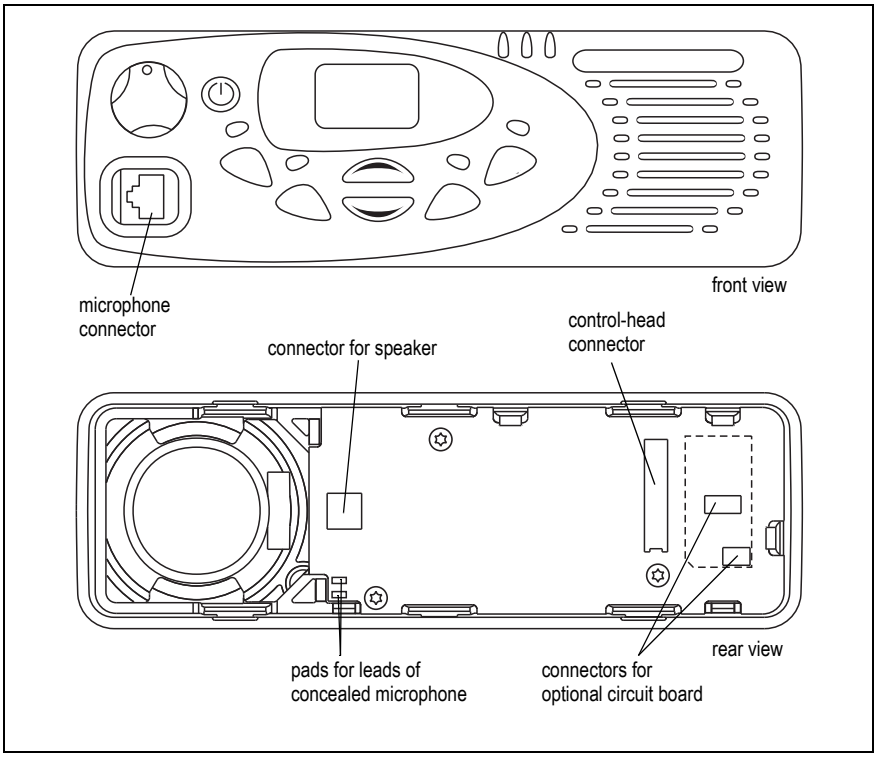

© Tait International Limited June 2023

2.5.2 RF Connector

The RF connector is the primary RF interface to the antenna. The RF connector is a standard mini-UHF connector or a BNC connector with an impedance of 50Ω.

Notice The maximum RF input level is +27 dBm. Higher levels may damage the radio.

Table 2.2 RF connector - pins and signals

Pinout	Pin	Signal Name	Signal Type
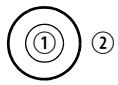 rear view	1	RF	RF analog
	2	GND	RF ground

2.5.3 Power Connector

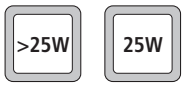

The power connector is the interface for the primary 13.8 V power source and the external speaker. The primary power source can be the vehicle battery or a mains-fed DC power supply. There are different power connectors for the >25 W and 25 W radios.

Notice The speaker load configuration is balanced; the speaker output lines must **not** be connected to ground. Connecting a speaker output line to ground will cause audio power amplifier shutdown.

Table 2.3 Power connector (radio) – pins and signals

Pinout	Pin	Signal name	Description	Signal type
>25 W radio 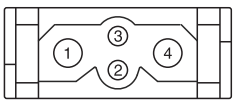 rear view **25 W radio** 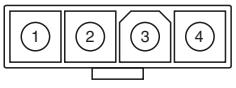 rear view	1	GND	Earth return for radio body power source.	Ground
	2	SPK–	External speaker output. Balanced load configuration.	Analog
	3	SPK+	External speaker output. Balanced load configuration.	Analog
	4	13V8_BATT	DC power input for radio body and control head.	Power

© Tait International Limited June 2023

2.5.4 Auxiliary Connector

The auxiliary connector is the standard interface for external devices that are typically connected to a radio. The auxiliary connector is a 15-way standard-density D-range socket. The auxiliary connector provides a serial port, three programmable input lines, four programmable digital I/O lines and audio I/O.

The I/O lines can be programmed for a variety of functions, logic levels, and in some cases, direction. Audio lines can also be programmed to tap into, or out of, different points in the audio processing chain. For more information refer to the online help of the programming application.

© Tait International Limited June 2023

Table 2.4 Auxiliary connector – pins and signals

Pinout	Pin	Signal name	Description	Signal type
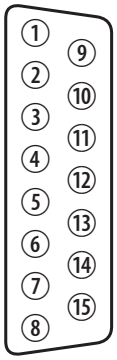 rear view	12	AUX_GPI1	General purpose digital input. Programmable function.	Digital, 3V3 CMOS
	5	AUX_GPI2	General purpose digital input. Programmable function. With LK3 fitted, GPI2 is an emergency power sense input.[1]	Digital, 3V3 CMOS
	4	AUX_GPI3	General purpose digital input. Programmable function. With LK2 fitted, GPI3 is a power sense input.[1]	Digital, 3V3 CMOS
	10	AUX_GPIO4	High current open collector output only. Some models contain a hardware configuration with this line available as a programmable input or low current output.	Digital, open collector output, 3.8V compatible, 2A maximum, no pullup.
	2	AUX_GPIO5	Programmable function and direction. Pads available to fit a higher power driver transistor on GPIO4 line	
	9	AUX_GPIO6		
	1	AUX_GPIO7		
	11	AUX_TXD	Asynchronous serial port - Transmit data	Digital, 3V3 CMOS
	3	AUX_RXD	Asynchronous serial port - Receive data	Digital, 3V3 CMOS
	7	AUD_TAP_IN	Programmable tap point into the Rx or Tx audio chain. DC-coupled.	Analog
	13	AUD_TAP_OUT	Programmable tap point out of the Rx or Tx audio chain. DC-coupled.	Analog
	14	AUX_MIC_AUD	Auxiliary microphone input. Electret microphone biasing provided. Dynamic microphones are not supported.	Analog
	6	RSSI	Analog RSSI output[2].	Analog
	8	+13V8_SW[3]	Switched 13.8V supply. Supply is switched off when radio body is switched off.	Power
	15	GND	Ground	Ground

1. For more information on hardware links refer to the Installation Guide (MMB-00002-xx).
2. Refer to "RSSI Performance Characteristics" on page 73 for more information.
3. Can be switched or unswitched. For more information refer to the Installation Guide (MMB-00002-xx).

© Tait International Limited June 2023

2.5.5 Internal Options Connector

When installing an internal options board, the internal options connector is the electrical interface to the main board of the radio body.
The internal options connector provides similar I/O to the auxiliary connector. The internal options connector is an 18-pin 0.1 inch pitch Micro-MaTch connector.

Notice The digital I/O signals are intended to interface directly with compatible logic signals only. Do not connect these signals to external devices without appropriate signal conditioning and ESD protection.

Table 2.5 Internal options connector– pins and signals

Pinout	Pin	Signal name	Description	Signal type
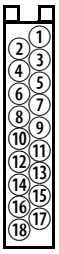 top view	1	13V8_SW[1]	Switched 13V8 supply. Supply is switched off when the Radio Body is switched off.	Power
	2	AUD_TAP_OUT	Programmable tap point out of the Rx or Tx audio chain. DC-coupled.	Analog
	3	AGND	Analog ground.	Ground
	4	IOP_MIC_AUD	Internal options microphone input Electret microphone biasing provided. Dynamic microphones are not supported.	Analog
	5	RX_BEEP_IN	Receive sidetone input. AC-coupled.	Analog
	6	AUD_TAP_IN	Programmable tap point into the Rx or Tx audio chain. DC-coupled.	Analog
	7	RX_AUD	Receive audio output. Post volume control. AC-coupled.	Analog
	8	RSSI	Analog RSSI output.	Analog
	9…15	IOP_GPIO1…7	General-purpose port for input and output of data. Programmable function and direction. With LK4 fitted, GPIO7 is a power sense input[2].	Digital. 3V3 CMOS
	16	DGND	Digital ground.	Ground
	17	IOP_RXD	Asynchronous serial port - Receive data.	Digital. 3V3 CMOS
	18	IOP_TXD	Asynchronous serial port - Transmit data.	Digital. 3V3 CMOS

1. Can be switched or unswitched. For more information refer to the Installation Guide (MMB-00002-xx).
2. For more information on hardware links refer to the Installation Guide (MMB-00002-xx).

2.5.6 Provision for External Options Connector

The radio has a mechanical interface for the external connector of an internal options board. This external options connector can be a 9-way standard-density or 15-way high-density D-range connector. If no internal options board is installed (standard configuration), the hole for the external options connector is sealed by a bung.

© Tait International Limited June 2023

2.5.7 Control Head Connectors

The control head FPC cable connects the connector on the front of the radio body to the connector on the rear of the control head.

The connector on the front of the radio body is an 18-way two-row right-angled IDC (insulation displacement connector) SMD header socket.

The connector on the rear of the control head is an 18-way 0.1 inch pitch Micro-MaTch SMD socket.

Table 2.6 Control head connectors – pins and signals

Pinout	Pin	Signal name	Description	Signal type
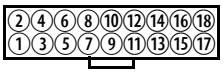 front view of radio top view of control head board	1	RX_AUD	Receive audio output. Post volume control. AC-coupled.	Analog
	2	+13V8[1]	Power supply output from radio body power source.	Power
	3	CH_TXD	Asynchronous serial port - Transmit data.	Digital. 3V3 CMOS.
	4	CH_PTT	PTT input from microphone. Also carries the hookswitch signal.	Digital
	5	CH_MIC_AUD	Fist microphone audio input.	Analog
	6	AGND	Analog ground.	Ground
	7	CH_RXD	Asynchronous serial port - Receive data.	Digital. 3V3 CMOS.
	8	DGND	Digital ground.	Ground
	9	CH_ON_OFF	Hardware power on/software-controlled power off input. Active low.	Digital
	10	VOL_WIP_DC	DC signal from volume pot wiper (not used, connected to AGND).	Analog
	11	CH_SPI_DO	Data output signal to control head.	Digital. 3V3 CMOS.
	12	CH_LE	Latch enable output to control head.	Digital. 3V3 CMOS.
	13	CH_GPIO1	General purpose digital input/output.	Digital. 3V3 CMOS input. Open collector output with pullup.
	14	+3V3	Power supply to control head digital circuits.	Power
	15	CH_SPI_DI	Data input from control head.	Digital. 3V3 CMOS.
	16	CH_SPI_CLK	Clock output to control head.	Digital. 3V3 CMOS.
	17	SPK–	Speaker audio output for non-remote control head. Balanced load configuration.	Analog
	18	SPK+	Speaker audio output for non-remote control head. Balanced load configuration.	Analog

1. Can be switched or unswitched. For more information refer to the Installation Guide (MMB-00002-xx).

© Tait International Limited June 2023

2.5.8 Microphone Connector

The microphone connector of the control head is an RJ45 socket.

When the control head is connected to the control head connector of the radio body using the FPC cable provided, the microphone connector uses the following eight control head connector signals:

Table 2.7 Microphone connector – pins and signals

Pinout	Pin	Signal name	Description	Signal type
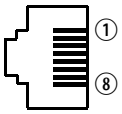 front view	1	MIC_RX_AUD	Receive audio output.	Analog
	2	+13V8[1]	Power supply output. Switched off when radio body is switched off.	Power
	3	MIC_TXD	Asynchronous serial port - Transmit data.	3.3V CMOS
	4	MIC_PTT	PTT input from microphone. Also carries hookswitch signal.	Digital
	5	MIC_AUD	Fist microphone audio input.	Analog
	6	GND	Ground.	Ground
	7	MIC_RXD	Asynchronous serial port - Receive data.	3.3V CMOS
	8	MIC_GPIO1	General purpose digital input/output.	Open collector out 3.3V CMOS in

1. Can be switched or unswitched. For more information refer to the Installation Guide (MMB-00002-xx).

2.5.9 Programming Connector (Programming Control Head)

The programming connector of the programming control head is an RJ45 socket.

When the programming control head is connected to the radio body, the programming connector uses the following signals.

Table 2.8 Programming connector – pins and signals

Pinout	Pin	Signal name	Description	Signal type
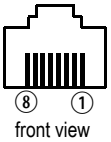 front view	1	PRG_RX_AUD	Receive audio output.	Analog
	2	+13V8[1]	Power supply output. Switched off when radio body is switched off.	Power
	3	PRG_TXD	Asynchronous serial port - Transmit data.	3.3V CMOS
	4	PRG_PTT	PTT input from microphone. Also carries hookswitch signal.	Digital
	5	PRG_MIC_AUD	Fist microphone audio input.	Analog
	6	AGND	Analog ground	Ground
	7	PRG_RXD	Asynchronous serial port - Receive data.	3.3V CMOS
	8	PRG_ON_OFF	Hardware power on/software-power off input. Active low.	Digital

1. Can be switched or unswitched. For more information refer to the Installation Guide (MMB-00002-xx).

© Tait International Limited June 2023

2.6 Shielding Cans and Connectors

All shielding cans used in the TM9300 and TM9400 are press fit shields.

Figure 2.7 and Figure 2.8 identify the cans and connectors on booth sides of the main board.

Figure 2.7 Shielding cans and connectors (top side of main-board assembly)

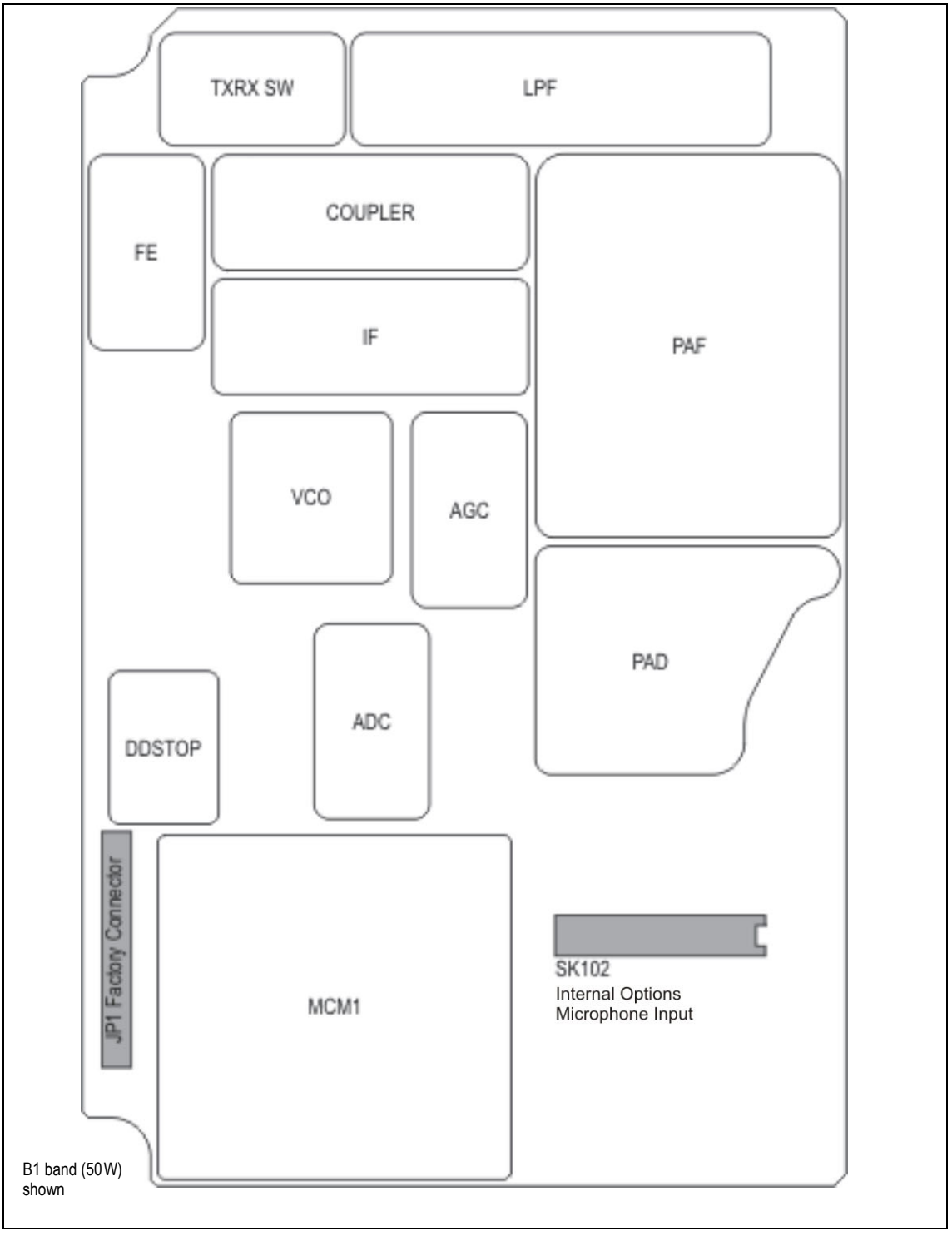

© Tait International Limited June 2023

Figure 2.8 Shielding cans and connectors (bottom side of main-board assembly)

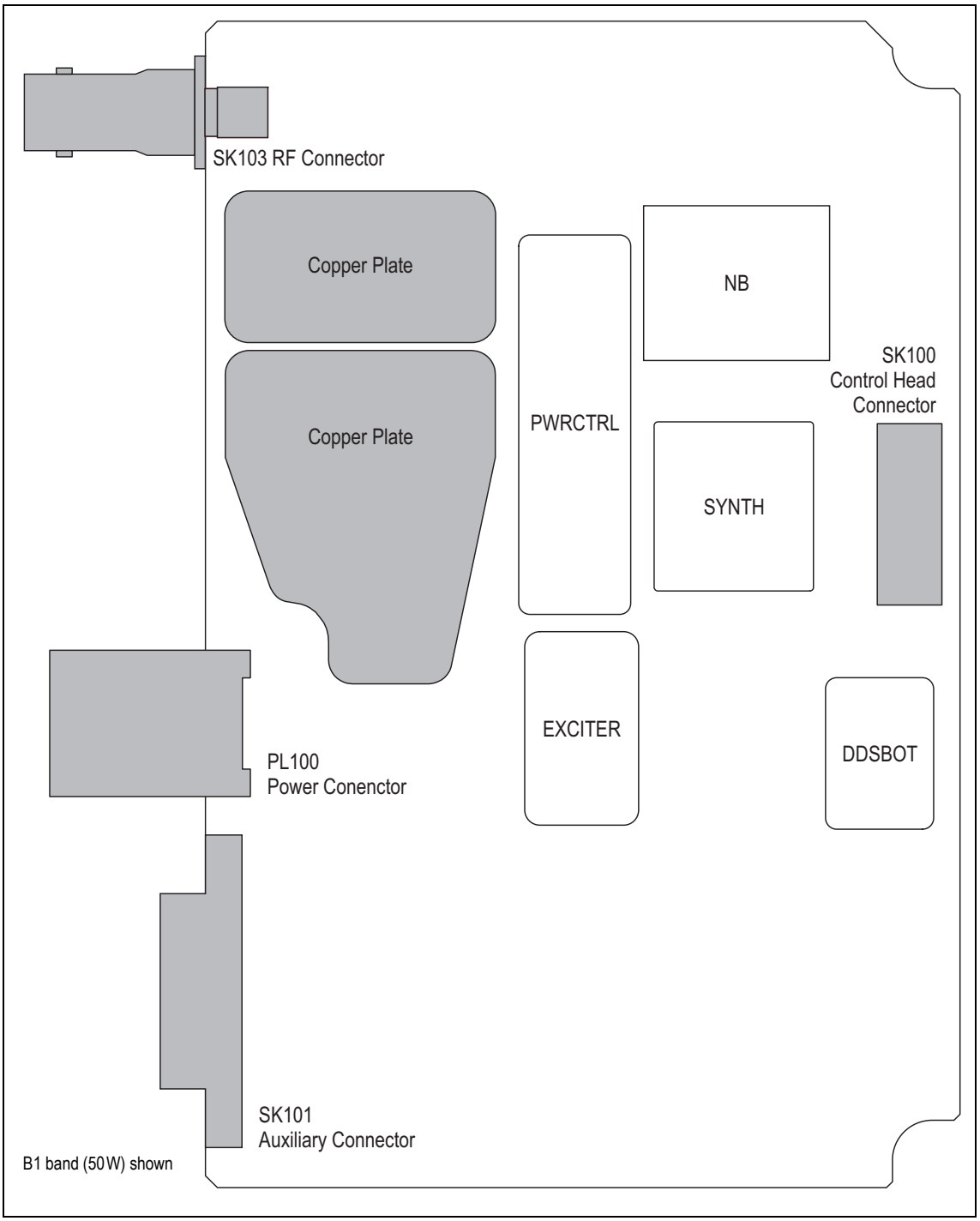

© Tait International Limited June 2023

Figure 2.9 identifies the cans and connectors of the graphical control head board.

Figure 2.9 Shielding cans and connectors of the graphical control head board

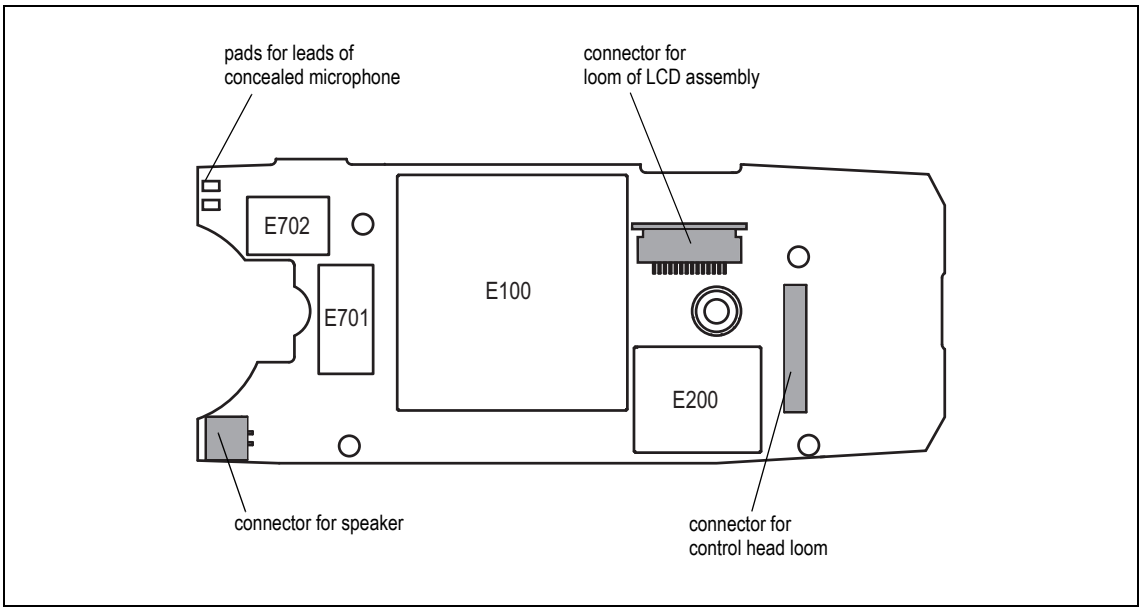

Removing a Can

If possible, use a can removal tool to remove and install a shielding can. Follow the instructions provided with the tool. If no can removal tool is available, use a hot air gun as described here.

> **Notice** A hot air gun provides little control and can damage a board. Even in skilled hands, a hot air gun causes rapid uncontrolled rises in component temperature, both under the can that is being removed and under adjacent cans.

To remove a can:

1. Set the temperature and airflow on the hot air tool. If using a Leister hot air tool, for example, select the 5 mm nozzle and set:
   - for a VCO can: temperature 4 and airflow 1
   - for a standard can: temperature 3–4 and airflow 1–2, depending on the thickness of the can.

ⓘ It is good practice to use flux when removing thicker cans. See "Applying Flux" on page 57.

2. Apply heat directly to the top edges of the can. The heat flows down the sides, to the solder joint. Move the hot air gun along all edges of the can in one continuous movement, adjusting your speed as necessary:
   - Do not allow too much heat to flow onto the surrounding board.
   - Do not stop in one spot for too long or you will burn the board and/or overheat the component.

Caution Do not burn yourself on the heated can.

3. When the solder has completely refilled, insert the tips of a pair of footed tweezers into the holes in the top of the can. For a VCO can, use a pair of fine point tweezers. Use the tweezers to lift the can from the board.

4. Do one of the following:
   - Ideally, discard any can that is removed and replace it with a new can.
   - Using flux and hot air, reflow the solder on the track of the can. Use solder wick to remove any excess solder from the track or, if there is insufficient solder on the track, pre-fill the lands with solder wire and iron. The track must be even and smooth or the can will twist or warp when you replace it on the board.

5. Clean the area with isopropyl alcohol or aerosol flux cleaner.

Installing a Can

1. Prepare the can:
   - If the original can is undamaged and its sides are straight, re-use the original can. The solder left on the bottom aids installation. Observe the special precautions you were shown during training.
   - If a new can is needed, tin the bottom of the can.

2. Make sure that the amount of solder on the track will enable the can to lie flat without twisting or warping:
   - To remove excess solder, use solder wick or similar.
   - To add solder, pre-fill the lands with solder wire and apply the soldering iron. Using too little solder will prevent the can staying secured. See "Achieving Quality Solder Joints" on page 58.

Notice Solder balls under a can may cause components to short. If you use solder paste, clean the area thoroughly afterwards to remove all traces of solder balls.

3. Apply flux gel to the track and then use hot air to reflow the solder on the track. Allow the lead-free solder time to reflow. See "Working with Lead-free Solder" on page 57. The track must provide a smooth, even surface for the can.

4. Apply flux gel sparingly either to the lands or to the bottom of the can, and then align the can on the lands.

5. Using the same hot air tool settings as you used earlier to remove the can, apply heat directly to the top edges of the can. The heat flows down the sides to the solder joint. Move the hot air gun along all edges of the can in one continuous movement, adjusting your speed as necessary. Allow the lead-free solder time to reflow.

© Tait International Limited June 2023

6. Make sure that the can is level on the board. If necessary, use a pair of tweezers to apply a little pressure to the can.

7. Use a magnifying lamp or a microscope to visually check all sides of the can for proper wetting. Make sure that reflow was successful and that the can is sitting correctly on the board.

   A bottom lip causes the can to sit slightly proud of the board once soldered.

8. Optional. To prevent movement of the can, apply solder paste to the outside of the can only and use a soldering iron to tack the diagonal corners of the can into position. Clean the area thoroughly afterwards to remove all traces of solder balls.

© Tait International Limited June 2023

2.7 SMT Repairs (PCB Components)

Notice Do not undertake repairs to SMT components unless trained and equipped to do so. See also "Repair Recommendations" on page 29. Attempting a repair without the necessary training, tools, and equipment can cause permanent damage to the radio.

The most cost-effective way to resolve a problem with a PCB or SMT component may be to replace the board. See "Removing the Main-Board Assembly" on page 77 and "Removing the Main-Board Assembly" on page 77.

If you have in-depth product knowledge and intend to perform board-level diagnosis and/or the replacement of board components, please refer also to the relevant PCB Information document.

Non-standard Procedures

Do not use the standard SMT repair techniques when replacing the inductors L1M and L3M. The standard techniques tend to produce excessive heat, which will damage these components. Do not use a hot-air tool or heat gun. Instead use solder paste and a standard soldering iron with an iron tip with a specified temperature of 600 °F (315 °C). The inductors are part of the SMPS of the power-supply circuitry on the bottom-side of the board. Figure 2.10 shows the locations of the components.

Figure 2.10 Locations of Territory inductors L1M and L3M

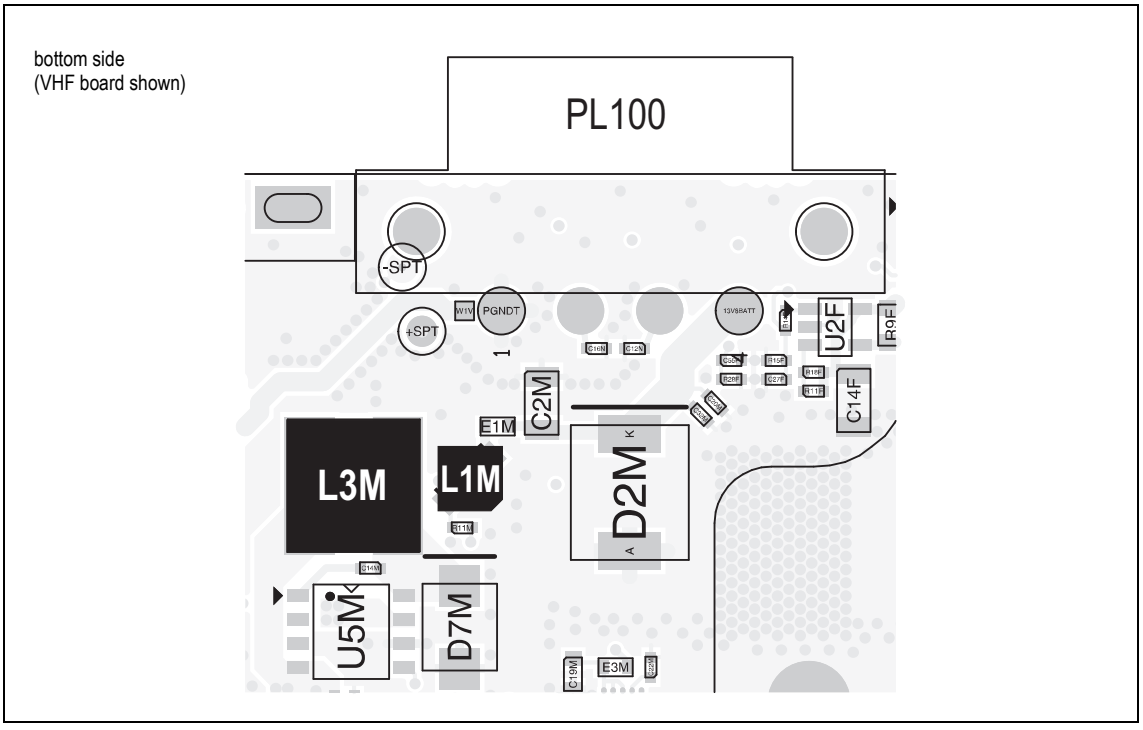

© Tait International Limited June 2023

2.7.1 Obtaining a Replacement PCB Component

To obtain a replacement PCB component, complete the following steps:

1. Obtain a PCB Information Document.
2. Identify the Damaged Component.
3. Consult the Technical Notes.
4. Verify the Specifications.
5. Order the Replacement Component.

Obtain a PCB Information Document

Notice Always make sure that you have the correct PCB Information document for the board under repair.

To obtain the correct PCB Information document for the board under repair:

1. Use your password to log into the secured area of the Tait Support website.
2. From the PCB label, record the serial number of the board. The serial number is the 'S' number. For example, 5135164.
3. Using the contact details provided on the Tait Support website, request the PCB Information document. You will need to quote the serial number of the board.

Identify the Damaged Component

Use the PCB Information document for the board under repair to identify the IPN of the damaged component.

Consult the Technical Notes

Technical notes are published on the Tait Support website.

ⓘ Before ordering a replacement component, consult all technical notes that apply to the board. They may provide technical details that are not yet in the manuals.

A major change in the design of a board - e.g. a layout change - is signalled by an increment of the board's issue number. In this case the IPN changes, new PCB Information is published, and a technical note is created. In the event of a minor change - e.g. a new component - the board's issue number stays the same. But if the minor change is important, a technical note is created. The IPN and the PCB Information document won't alert you to a minor change: only the technical notes will.

ⓘ Best practice is to print and store a copy of all relevant technical notes.

© Tait International Limited June 2023

Verify the Specifications

Before ordering a part, make sure the specifications of the damaged part are identical to the specifications provided by the Parts List in the relevant PCB Information document. It is vital for tolerances to be the same.

When the replacement component arrives, verify specifications again before installing the part.

Order the Replacement Component

If the component can be ordered as part of a spares kit, order the spares kit rather than the individual parts. See "Spare Parts" on page 179. If the item can be ordered as a stand-alone part, order it in the usual way.

2.7.2 Tools for SMT Repairs

To repair or replace SMT components on a PCB, a can removal tool is recommended but is not mandatory. See "Removing a Can" on page 51.

If the repair involves **lead-free solder**, the following tools are recommended:

Tool	IPN
Brush for cleaning	936-00001-33
Cutters, medium (small and large are also available)	365-00013-00
Pliers	936-00000-96
Tweezers, footed	936-00002-50
Tweezers, pointed	936-00000-50

2.7.3 Consumables for SMT Repairs

For **lead-free SMT** repairs, the following consumables are recommended:

Consumable	IPN
Flux gel, in syringe	937-00002-76
Hakko 'Goldilocks' cleaner units	937-00002-16
Hakko 'Goldilocks' refills	937-00002-15
Mini flux pen	937-00001-02
Solder paste	937-00002-81
Solder wick, standard	937-00002-26
Solder wick, narrow	937-00002-19
Solder wire, 0.35mm	937-00002-77

© Tait International Limited June 2023

Consumable	IPN
Solder wire, 0.7 mm	937-00002-78
Solder wire, 0.56 mm	937-00002-79
Tip tinner	937-00001-53

Syringe needles and push rods are also available on request.

2.7.4 SMT Repair Techniques

Notice Do not undertake repairs to SMT components unless trained and equipped to do so. If you attempt a repair without the necessary equipment, tools, or training, you could permanently damage the radio. See also "Repair Categories" on page 29.

Follow these specific repair guidelines in addition to the standard repair techniques that apply to the replacement of SMT components.

Working with Lead-free Solder

Lead-free solder contains tin, silver, and copper. Observe the following guidelines and precautions when working with it. To order the tools and consumables referred to below see "Tools for SMT Repairs"and "Consumables for SMT Repairs" on page 56.

Controlling the Heat

If a component is located in a thermal drain area, the recommended maximum temperature when working with lead-free solder is:

- 608 °F (320 °C) for the smallest components
- 698 °F (370 °C) or 752 °F (400 °C) for bigger components.

Notice Lead-free solder has a higher melting point than leaded solder and so takes longer to achieve proper wetting. Be patient. Do not increase the heat setting to make the solder melt faster. Increasing the temperature will destroy the flux solvent, creating unstable and brittle solder joints.

Although it takes longer to heat a capacitor than a resistor, a capacitor is more susceptible to heat damage.

Applying Flux

Flux aids heat transfer. If components and cans are located in a thermal drain area, **flux gel** enables you to rework more quickly than a mini flux pen does and is more robust.

ⓘ To make flux flow more easily, warm the syringe needle on the flux gel.

© Tait International Limited June 2023

Because flux is a combination of resins and solvents, it evaporates almost immediately when heated. Although flux gel is a no-clean flux, use it sparingly and clean it off using a brush and isopropyl alcohol or aerosol flux cleaner.

Achieving Quality Solder Joints

- If possible, reflow a component off the board, apply flux, and then reflow a new component on without adding more solder.
- If you must add solder, remove all old solder first. **Do not mix lead-free solder and leaded solder in a single joint.** Doing so creates an alloy of unknown parameters: the joint may become harder and more brittle, and its melting temperature may be higher.
- When you clean the tip of the soldering iron, do not make the sponge too damp. A cold sponge reduces the tip temperature. With lead-free solder, in particular, the drop and subsequent rise in temperature can affect the formation of the solder joint.
- Relative to leaded solder joints, lead-free solder joints look dull and grainy. This is a cosmetic difference only. All acceptance criteria remain the same. For the standards see the IPC A-610D Acceptability of Electronic Assemblies.

Maintaining the Soldering Iron

When you use lead-free solder, the iron tip of the soldering iron may corrode quickly and become untinnable. To prevent damage to the soldering iron:

- Always leave a generous amount of solder on the tip and turn off the soldering iron when you are not using it.
- Use tip tinner/cleaner to remove built up oxides and help prolong tip life. Tait recommends you use the Hakko Goldilocks-type tip cleaner. See "Consumables" on page 38.

Removing and Installing an 0402 Component

Removing an 0402 Component

To remove an 0402 component from a board:

1. Determine the correct temperature setting for the hot air gun, based on the size of the component to be removed. See "Controlling the Heat" on page 57.

   Notice Do not overheat the component.

2. Shield any heat-sensitive components. You can use a slightly thicker can for this.

3. Adjust the hot air gun to the correct temperature and set the airflow to 1.

4. Apply flux to the area as described above.

© Tait International Limited June 2023

5. Using a pair of tweezers to hold the component firmly, apply the hot air gun until the solder for the component has completely reflowed. Lift the component from the board.

6. Do one of the following:
   - If you can attach a replacement component without adding more solder, retain the existing solder.
   - If you need to add solder, remove and discard the reflowed solder. To remove solder, use narrow solder braid; do not cut standard braid down to size. If approved solder wire was used, no cleaning is required. If solder paste was used, clean the area as described above.

Installing an 0402 Component

1. Adjust a hot air gun to the correct temperature (see above) and set the airflow to 1.

2. Use a pair of tweezers to pick up the replacement component and place the component in the center of the pad.
   - Hold a component across its body. Do not hold a component by its end caps.
   - If the part is a resistor, ensure that the numbers on the resistor are visible (uppermost).

3. Starting with the hot air gun 2 cm (4/5 in) above the component and working in a circular motion, slowly bring the hot air gun closer to the component.

   Notice Do not apply heat for longer than a few seconds or the heat will damage the board, the component, and everything around the component.

4. When the solder starts to melt, remove the hot air gun and allow the component to cool slightly.

   Remove the pair of tweezers, apply flux, and then apply the heat again for only a few seconds. The component self-aligns.

© Tait International Limited June 2023

2.8 Test Equipment

To service the radio, the following test equipment is required:

- a test computer, on which the calibration application and the relevant programming application is loaded
- an oscilloscope
- a digital current meter capable of measuring up to 20 A
- a multimeter
- DC power supply (capable of 13.8 V and 20 A for the >25 W radios, and 10 A for the 25 W radios)
- one of the following:
  - an RF communications test set with an audio bandwidth of at least 10 kHz
  - an RF signal generator, an audio signal generator, an audio analyzer, an RF power meter, and a modulation meter.

  See "Setting Up the Test Equipment" on page 61. To test and maintain the radio using a Test Unit (TOPA-SV-024) see "TOPA-SV-024 Test Unit" on page 191.
- a spare control head
- a T02-00031-0007 service kit.

© Tait International Limited June 2023

2.9 Setting Up the Test Equipment

Figure 2.11 Radio test equipment setup

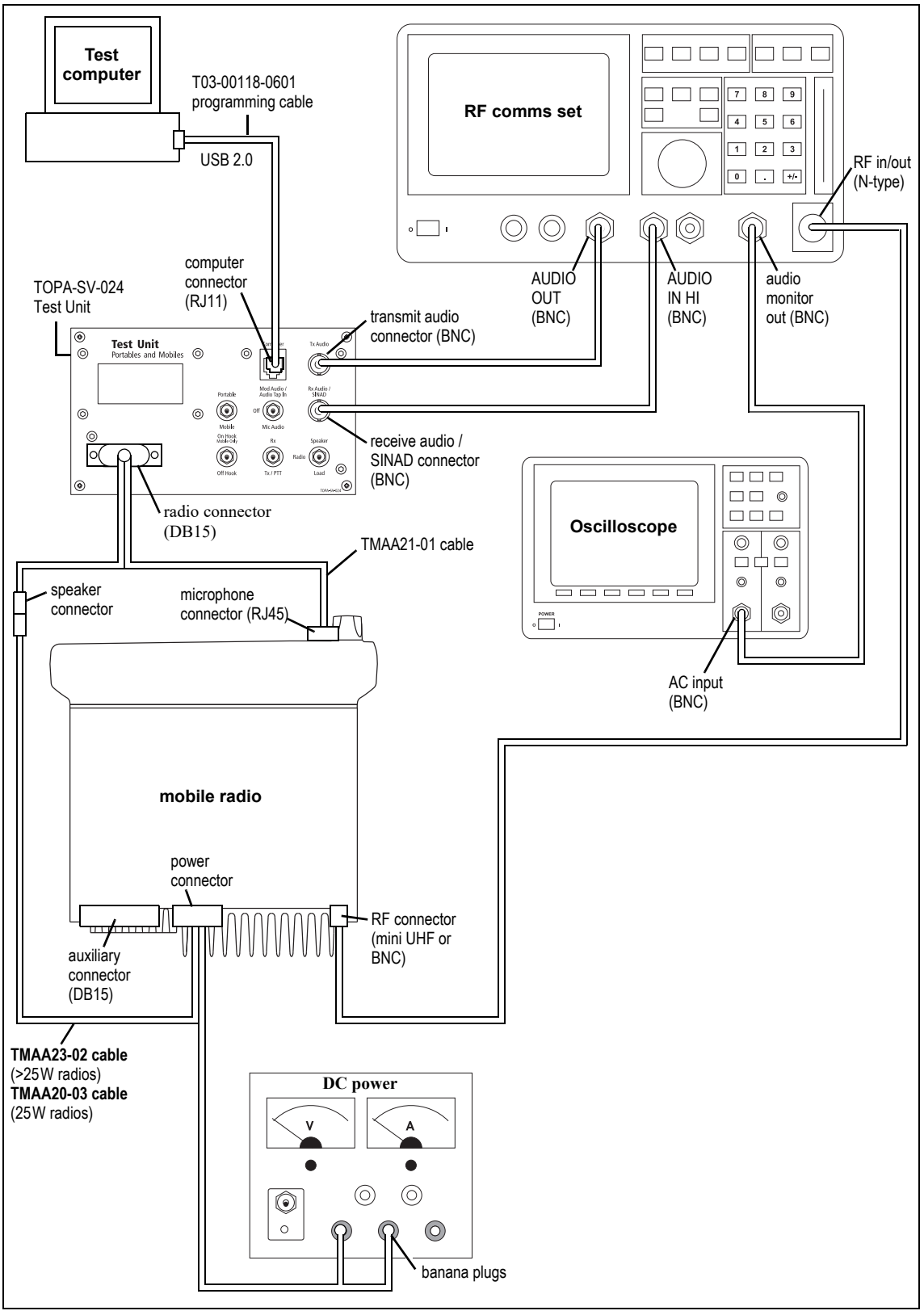

Connect the Test Equipment

Connect the radio to the Test Unit (TOPA-SV-024) as shown in Figure 2.11 on page 61.

Set the Test Unit Switches

Set the Portable/Mobile switch to **Mobile**.

> **Notice** The wrong switch position can damage the Test Unit and/or cause incorrect SINAD readings.

To test receive functions, set the Test Unit switches as follows:

- hook switch: **Off Hook**
- mode switch: **Rx**
- audio in switch: **Off**
- audio out switch: **Speaker** or **Load**:
  - **Speaker** causes received audio to be output from the Test Unit speaker.
  - **Load** causes a 16Ω load to be switched into the circuit in place of the Test Unit speaker. The signal is terminated in the dummy load, and no speakers are activated.

For the operation of these switches see Chapter 9, TOPA-SV-024 Test Unit.

To test transmit functions, set the Test Unit switches as follows:

- hook switch: **Off Hook**
- mode switch: **Rx** initially; when ready to transmit, **Tx/PTT**. This switch functions in the same way as the PTT switch on the radio.
- audio in switch: **Mic Audio**
- audio out switch: (anything)

When you program or calibrate a radio, the switches have no effect.

- It is good practice to set the mode switch to **Rx**.

Install the Programming and Calibration Applications

Install the two programming applications and the calibration application on the test computer. See next.

© Tait International Limited June 2023

2.10 Programming and Calibration Applications

Servicing tasks require the following software applications:

- calibration application
- programming application.

These applications are provided on the Programming/Calibration CD (T02-00031-0003 for TM9300 or T02-00031-0004 for TM9400). Install the relevant applications on the test computer. They can also be downloaded from the Tait Technical Resources website. For detailed instructions in the use of an application, start the application and then access the Help.

2.11 Upgrading the Radio Firmware

Before servicing the radio, make sure that the radio database version and the radio operating band support the firmware version that is currently installed on the radio.

2.11.1 Viewing the Firmware Version

To view the installed firmware version number, do one of the following:

- Keep the PTT key depressed as you turn on the radio. The screen displays the firmware version number. See also "Pressing Keys When Turning On the Radio" on page 70.
- From the relevant programming application, select Radio > Interrogate. The screen that appears displays the product code, radio band and model, and firmware, hardware and database version numbers.

2.11.2 Upgrading Firmware

Please contact your Tait dealer, if you need a firmware update.

2.11.3 Installing Firmware

To install a firmware upgrade on the radio:

- From the relevant programming application select Tools > Download. For details, see the Help for the programming application. The firmware is transferred from the computer to the radio.

© Tait International Limited June 2023

2.12 Computer-Controlled Test Mode (CCTM)

Use computer-controlled test mode (CCTM) to test the basic functions of the radio and the integrity of the radio hardware. Some CCTM commands cause the radio to carry out particular functions; others read settings and parameter values from the radio.

To use CCTM:

1. Connect the radio to the test equipment. See "Setting Up the Test Equipment" on page 61.

2. Place the radio in computer-controlled test mode. See Placing the Radio in Computer-Controlled Test Mode, below.

ⓘ All radio keys, inputs, displays, and tones under software control are temporarily disabled while the radio is in CCTM. The radio uses parameters from its own configuration file, except for parameters that are specifically overridden by a CCTM command.

3. Enter CCTM commands on the test computer. See Entering a CCTM Command on page 65.

   Commands are relayed to the radio via the Test Unit (TOPA-SV-024) and responded to by the radio. If the radio generates results that can be viewed, these are displayed on the computer. If it generates an error see "CCTM Error Codes" on page 70.

To exit CCTM:

- If using the calibration application, turn off the radio. When the radio is turned on again, it is no longer in test mode.
- If using a terminal program, enter the Reset CCTM command, '^' 0x5E.

2.12.1 Placing the Radio in Computer-Controlled Test Mode

Enter CCTM from a terminal program such as the HyperTerminal utility that was supplied with Microsoft Windows XP® and can be installed on Windows 7, or an equivalent such as TerraTerm. Select the settings for the communications port before placing the radio in CCTM.

1. Select Start > Programs > Accessories > Communications > HyperTerminal [or equivalent].

2. On the computer, select the communications (COM) port that the radio is connected to.

© Tait International Limited June 2023

3. Select the following settings for the COM port:
   - bits per second: 19200
   - data bits: 8
   - parity: none
   - stop bits: 1
   - flow control: none
4. Click the OK button and save the file with a suitable name.

   This file contains the port settings. To use the same port settings in future HyperTerminal sessions, open the file.

ⓘ The timing of the following steps is important: you must enter the character % **within half a second** of the letter v appearing.

5. Place the radio in CCTM:
   a. Enter the character ^. The radio is reset and the lowercase letter v appears. (If uppercase V appears, there is a fault. Check the COM port settings and try again.)
   b. Within half a second, enter the character %. The character – appears and Test Mode appears on the radio display. If this does not happen, repeat 5 until the radio enters CCTM.

2.12.2 Entering a CCTM Command

Place the radio in CCTM and then use the computer to either select or enter a CCTM command.

ⓘ Allow the radio time to respond to a command before you enter another command, or test results may be unreliable. Although the command prompt – appears on a new line on the computer screen when the radio **receives** a command, you must also wait for the radio to **respond**.

To enter a CCTM command from the calibration application:

- Do one of the following:
  - Choose the name of the command from the drop-down list. The corresponding number appears in the next field.
  - Enter the number(s) associated with the command. The corresponding name appears in the previous field. If a command consists of a sequence of numbers, press the spacebar once to separate the numbers in the sequence. Press Enter only once, after the final number in the sequence.

To enter a CCTM command from a terminal program:

- Enter the command number.

© Tait International Limited June 2023

2.12.3 CCTM Commands

The tables listed below identify the test mode commands, show what to enter (or select) to send the commands, and describe the responses that appear on the screen.

Table 2.9 CCTM commands for the radio

CCTM command	Enter	Response
32 – Receive mode Sets the radio into receive mode	32	None
33 – Transmit mode Sets the radio into transmit mode	33	None
46 – Battery level	46	Supply voltage in mV ADC voltage (0 to 255)
63 – RSSI level	63	Averaged RSSI in 0.1 dBm steps
72 – Lock status	72	Returns xyz x = main synth y = digital clock z = not used (1 = locked, 0 = unlocked)
93 – SSN	93	SSN or MMI board serial number (if programmed), else 0
94 – Radio serial number	94	Radio serial number (if programmed) else output for CCTM 93 xxxxxxxx, the eight-digit serial number (S/N) of the radio, which is also on the chassis label; see “Labels” on page 23
96 – Firmware version[1]	96	Firmware version number
97 – Boot software version	97	Boot software version number
98 – FPGA version	98	FPGA version number
101 – Set radio frequency	101 <tx_freq> <rx_freq> 0 (frequencies in Hz)	None
111 – Read volume level	111	Volume level ‘Wiper’ setting (0 to 255)
133 – Hardware version Reads the product code and the hardware version	133	Product code and hardware version See “Tait Product Numbering” on page 25.
203 – Clear system error Clears the last recorded system error	203	None
204 – Read system error Reads the last recorded system error and the associated data	204	SysErr: x y where **x** is the error number and **y** represents the associated data

© Tait International Limited June 2023

Table 2.9 CCTM commands for the radio (Continued)

CCTM command	Enter	Response
205 – Erase persistent data Effectively resets the calibration parameters to their default values	205	None
326 – Set transmitter power level	326 **x** where **x** specifies the level (0=off, 1=very low, 2=low, 3=medium, 4=high, 5=maximum)	None
611 – Show terminal operating times[2] Shows the radio's operating times in milliseconds	611	Total operating time High power Tx time Low power Tx time[3]
612 – Clear terminal operating times[2] Resets the radio's operating time counters to zero	612	"All operating time data cleared"

1. To display the radio's firmware and hardware version, see also "Pressing Keys When Turning On the Radio" on page 70.
2. This command is only available in the TM9480.
3. "Low power" also includes medium, low and very low power.

Table 2.10 CCTM commands for fault finding of the control head

CCTM command	Enter	Response
1000 – All function key LEDs and status LEDs Sequentially switches the function key LEDs and the status LEDs on and off	1000 0 = off 1000 1 = on	None
1001 – Individual function key LEDs and status LEDs Switches individual LEDs on and off	1001 **x y** where **x** is the LED number (0=F1, 1=F4, 2=yellow, 3=green, 4=red), and **y** is the state (0=off, 1=on)	None
1002 – LED intensity Sets the LED intensity	1002 0 = off 1002 1 = low 1002 2 = medium 1002 3 = high	None
1003 – Keypad backlighting Activate keypad backlighting at specified intensity	1003 0 = off 1003 1 = low 1003 2 = medium 1003 3 = high	None
1004 – LCD backlighting Activate LCD backlighting at specified intensity	1004 0 = off 1004 1 = low 1004 2 = medium 1004 3 = high	None
1005 – LCD contrast Sets the LCD contrast (16 levels)	1005 **x** where **x** is the contrast level (0 to 15)	None
1006 – LCD elements Switches all LCD elements on and off	1006 0 = off 1006 1 = on	None
1007 – LCD temperature sensor Reads the LCD temperature sensor	1007	Value between 00 (0) and FF (255)
1008 – LCD heating Switches the LCD heating on and off	1008 0 = off 1008 1 = on	

© Tait International Limited June 2023

Table 2.10 CCTM commands for fault finding of the control head (Continued)

CCTM command	Enter	Response
1009 – Key press Detects and notifies individual key press and release events	1009 0 = off 1009 1 = on	serial output
1010 – Volume potentiometer Reads and notifies the volume potentiometer setting	1010	value between 00 (0) and FF (255)
1011 – Microphone Selects the microphone input source	1011 0 = microphone connector 1011 2 = concealed microphone	none
1012 – Remote amplifier Turns the audio amplifier on and off in the remote head	1012 0 = off 1012 1 = on	None
1013 – Mute audio amplifier Mutes and unmutes the remote audio amplifier	1012 0 = mute 1012 1 = unmute	None
1014 – Digital potentiometer Reads the remote digital potentiometer	1014	Value between 0 and 255
1017 – Audio amplifier gain sets the audio amplifier gain (4 levels)	1017 **x** where **x** is the gain (0 to 3)	None
1019 – Read/set control head GPIO Reads the input state or sets the output state of the microphone port GPIO signal (J106 pin 8)	1019 = read	Value 1 if high Value 0 if low
	1019 1 = set high 1019 0 = set low 1019 = read (reset to input)	None None
1203 – Clear last system error	1203	CH: no system errors dumped
1204 – Read last system error	1204	if there are errors: an error dump if there are no errors: CH: no system errors dumped

© Tait International Limited June 2023

Table 2.11 CCTM commands for fault finding of the handheld control head

CCTM command	Entry at keyboard	Response on screen
1000 – **All function key LEDs and status LEDs** sequentially switches the function key LEDs and the status LEDs on and off	1000 0 = off 1000 1 = on	none
1001 – **Individual function key LEDs and status LEDs** switches individual LEDs on and off	1001 **x y** where **x** is the LED number (2=orange, 3=green, 4=red), and **y** is the state (0=off, 1=on)	none
1002 – LED intensity sets the LED intensity	1002 0 = off 1002 1 = low 1002 2 = medium 1002 3 = high	none
1003 – Keypad backlighting Activate keypad backlighting at specified intensity	1003 0 = off 1003 1 = low 1003 2 = medium 1003 3 = high	none
1004 – LCD backlighting Activate LCD backlighting at specified intensity	1004 0 = off 1004 1 = low 1004 2 = medium 1004 3 = high	none
1005 – LCD contrast sets the LCD contrast (16 levels)	1005 **x** where **x** is the contrast level (0 to 15)	none
1006 – LCD elements switches all LCD elements on and off	1006 0 = off 1006 1 = on	none
1009 – Key press detects and notifies individual key press and release events	1009 0 = off 1009 1 = on	serial output
1020 – Microphone mute	1020 0 = mute 1020 1 = unmute	

© Tait International Limited June 2023

2.12.4 CCTM Error Codes

Table 2.12 shows error messages that can be displayed when the radio is in test mode. For detailed assistance please refer to the online help for the calibration application. If an error persists contact your Regional Repair Centre.

Table 2.12 CCTM error codes

Error code	Description
C01	An invalid CCTM command has been received. Enter a valid CCTM command.
C02	A valid CCTM command with invalid parameters has been received. Re-enter the CCTM command with valid parameters.
C03	A valid CCTM command has been received but cannot be processed at this time. Enter the CCTM command again. If the error persists, power the radio down and up again, and re-enter the CCTM command.
C04	An error occurred the initialization of test mode. Power the radio down and up again, and place the radio in CCTM again.
C05	The radio has not responded within the specified time. Re-enter the CCTM command.

2.13 Pressing Keys When Turning On the Radio

If you hold down the PTT key **when turning on** the radio, the radio will briefly display the firmware and hardware versions, and the radio's frequency band. This information is also available from the Radio info menu.

This function does not work with the handheld control head.

Figure 2.12 Radio Firmware, hardware and frequency band information

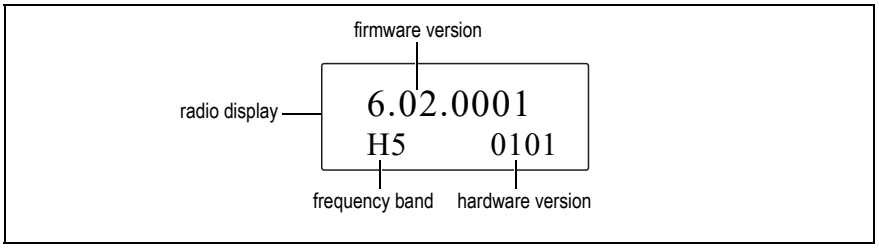

© Tait International Limited June 2023

2.14 Visual and Audible Indicators

The radio uses a combination of visual and audible indicators to indicate its current state and activity. These can be useful when servicing the radio.

2.14.1 Visible Indicators

LCD Screen

The LCD screen in the control head displays:

- channel and user information
- error messages.

Table 2.12 on page 70 lists some of the error messages. For more information about what appears on the LCD screen, please refer to the relevant radio User's Guide.

LED Indicators

The information conveyed by the STATUS LEDs is listed in Table 2.13 on page 71. The behavior of the function-key LEDs depends on the way the function keys are programmed.

Table 2.13 Visual indications provided by the STATUS LEDs

LED color	LED name	Indications	Meanings
Red	Transmit	LED is on	The radio is transmitting
		LED flashes	(1) The transmit timer is about to expire (2) The radio has been stunned
Green	Receive and monitor	LED is on	There is activity on the current channel, although it might not be audible
		LED flashes	(1) The radio has received a call with valid special signaling (2) The monitor has been activated (3) The squelch override has been activated
Amber	Scanning	LED is on	The radio is scanning a group of channels for activity
		LED flashes	The radio has detected activity on a certain channel and scanning has halted on this channel

2.14.2 Audible Indicators

The radio emits audible beeps and tones to advise you about its status. Audible indicators include keypress confidence tones, received call signals, transmit timer, and unanswered call signals. For example, the radio may be programmed to indicate whether an action is permitted (short, medium-pitched beep) or not permitted (long, low-pitched beep).
Some audible indicators supplement visual indicators.

© Tait International Limited June 2023

The information conveyed by the tones is given in Table 2.14.

When Troubleshooting the Radio

When troubleshooting the radio, make sure that audible tones are enabled and that they are set to a useful volume. For example, if the radio is programmed so that a particular indicator is set to a volume of '0' you will not hear that indicator. If necessary, use the relevant programming application to increase the volume settings.

> **Notice** Before changing any settings, read the programming file as described in Chapter 4, Servicing Procedures. Restore all customized volume settings before returning the radio to the customer.

List of Audible Indicators

For a comprehensive list of audible indicators, including those that relate to signaling and modes, search for 'Indicator Types' in the online help for the relevant programming application. For a summary of the indicators, see the following table.

Table 2.14 Audible indications

Type of tone	Meanings
One short beep	(1) After power-up — Radio is locked; PIN is required (2) On power-down — Radio is off (3) On pressing key — Key-press is valid (4) On pressing function key — Function has been initiated
One short low-pitched beep	On pressing function key again — Function has been terminated
One short high-pitched beep	While powered up — Radio has been stunned
One long low-pitched beep	(1) On pressing key — Key-press is invalid (2) On entry of PIN — PIN is invalid (3) On pressing PTT switch — Transmission is inhibited
Two short beeps	(1) On power-up — Radio is ready to use (2) On entry of PIN — PIN has been accepted and radio is ready to use (3) After radio has been stunned — Radio has been revived and is ready to use
Two low-pitched beeps	While powered up — Temperature of radio is high
Two high-pitched beeps	While powered up — Temperature of radio is very high and all transmissions will be at low power; if temperature rises further, transmissions will be inhibited
Three short beeps	While powered up — Previously busy channel is now free
Three beeps	During transmission — Transmit time-out is imminent; transmission will be terminated in 10 seconds
Warble	While powered up — Frequency synthesizer is out of lock on current channel; LCD will usually display *Out of Lock*.
Continuous low-pitched tone	While powered up — System error has occurred and radio might be inoperable; LCD usually displays *System Error* (graphical display), *E1* or *E2*.

© Tait International Limited June 2023

2.15 RSSI Performance Characteristics

The analog RSSI output is available on pin 6 of the auxiliary connector, and is measured with regard to pin 15 (ground) of the same connector (refer to "Auxiliary Connector" on page 44).

As shown in Figure 2.13, the linear range of the output starts at 0.6 V for a –120 dBm RF input, and increases at a rate of 25 mV per 1 dB increase in received signal strength to reach 2.35 V at –50 dBm received signal strength.

The error margin on the analog voltage pin is ±50 mV with an accuracy of ±3 dB for the actual received signal strength measurement in the radio.

Figure 2.13 RSSI voltage vs. signal strength

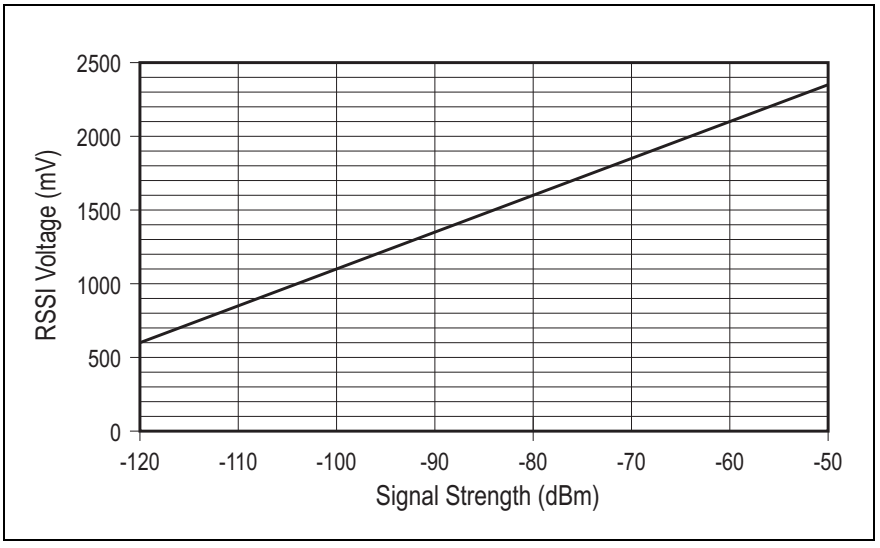

© Tait International Limited June 2023

3 Disassembly and Reassembly

This section describes how to:

- remove and mount the control head
- disassemble and reassemble the radio body
- disassemble and reassemble the control head
- disassemble and reassemble the handheld control head.

General

Notice Before disassembling the radio, disconnect the radio from any test equipment or power supply.

Disassemble only as much as necessary to replace the defective parts.

Inspect all disassembled parts for damage and replace them, if necessary.

Observe the torque settings indicated in the relevant figures.

For information on spare parts, refer to "Spare Parts" on page 179.

© Tait International Limited June 2023

3.1 Removing and Mounting the Control Head

Notice Before removing the control head, disconnect the radio from any test equipment or power supply.

Removing the Control Head

1. Note which way up the control head is attached to the radio body in order to return the radio to the customer in its original configuration.

2. On the underside of the radio body, two lever points are indicated on the radio body by a dot-dash-dot pattern (○ ▭ ○).
   The lever point is between the control head seal and the plastic of the control head.

Figure 3.1 Disconnecting the control head from the radio body

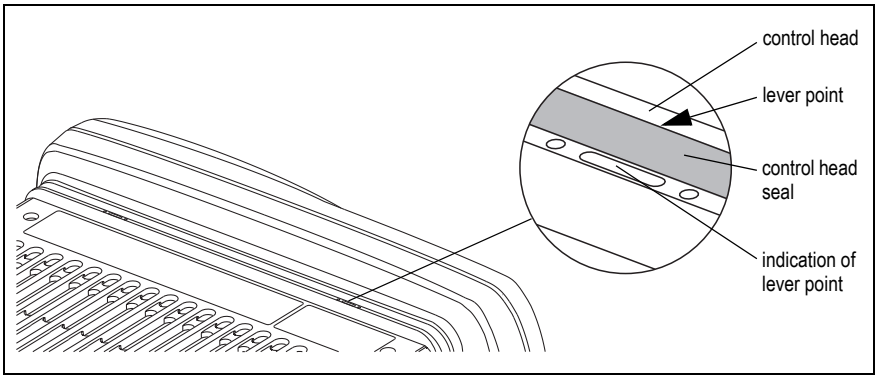

Notice When inserting the flat-bladed screwdriver, take care not to damage the control head seal.

3. At either of the lever points, insert a 3/16 inch (5mm) flat-bladed screwdriver between the control head and the control head seal.

4. Use the screwdriver to lift the edge of the control head up and off the clip, then repeat in the other position. The control head can now be removed.

5. Disconnect the control head loom.

6. Inspect the control head seal for damage, and replace if necessary.

Mounting the Control Head

1. Plug the control head loom onto the control head connector.

Notice When mounting the control head, make sure you do not pinch and damage the control head loom.

2. Insert the bottom edge of the control head onto the two clips in the front of the radio body, then snap into place.

© Tait International Limited June 2023

3.2 Disassembling the Radio Body

Disassemble only as much as necessary to replace the defective parts. For reassembly instructions, refer to "Reassembling the Radio Body" on page 82.

Removing the Cover

1. At the upper edge of the lower screw bosses on both sides of the radio body, insert a 1/8 inch (3 mm) flat-bladed screwdriver.
2. Push the screwdriver under the cover towards the upper screw boss to release the cover from the upper screw boss.
3. Remove the cover.

Figure 3.2 Removing the cover

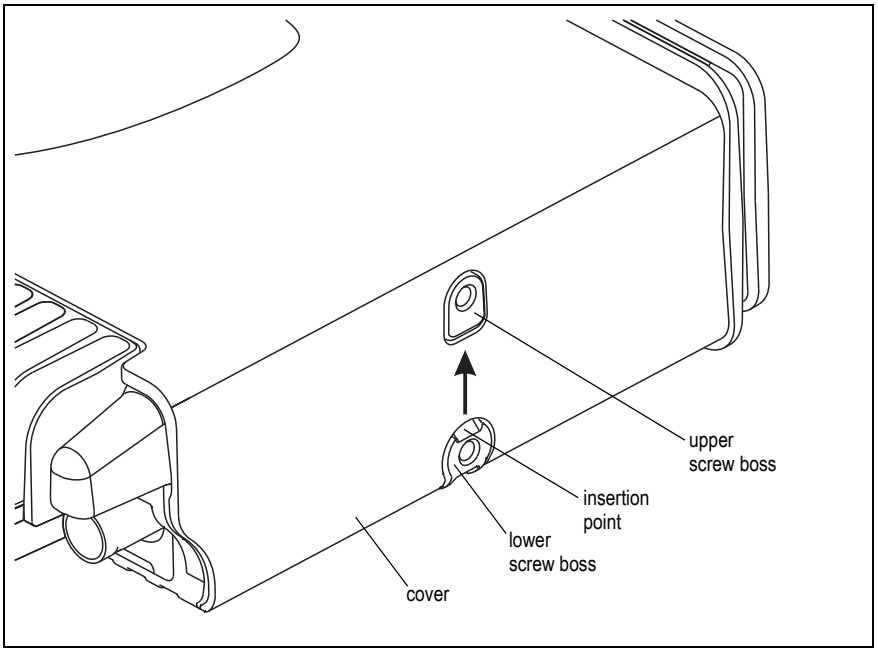

© Tait International Limited June 2023

Opening the Radio Body

The circled numbers in this section refer to the items in Figure 3.3 on page 78.

1. Use a Torx T20 screwdriver to remove the four screws ②.

   Notice If an options board is fitted inside the lid, an options loom will connect the options board to the internal options microphone input on the main board. In this case, carefully fold over the lid and disconnect the loom.

2. Carefully remove the lid assembly ③.

3. Inspect the main seal in the lid for damage, and replace if necessary.

Removing the Main-Board Assembly

The circled numbers in this section refer to the items in Figure 3.3 on page 78.

1. Remove the auxiliary connector bung ⑦ (if fitted).

2. Remove the RF connector seal ⑨ using one of the tabs located at the bottom of the seal—preferably by hand. If necessary, lift up the tap using the blade of a small flat-bladed screwdriver. Do not damage the seal with the screwdriver.

3. Use a Torx T10 screwdriver to remove the screws ④ connecting the main board to the chassis.

4. Use a Torx T20 screwdriver to remove the screws ⑧ connecting the heat-transfer block to the rear of the chassis.

   Notice Make sure not to touch the thermal paste on the chassis, the heat-transfer block, and the underside of the main board. If the thermal paste is contaminated, you must re-apply thermal paste as described in "Fitting the Main-Board Assembly to the Chassis" on page 84.

5. Holding a hand over the chassis to catch the main-board assembly, turn the chassis upside down and tap its fins on the edge of the workbench. This will release the heat-transfer block from the chassis.

6. The gap pad 19x12 mm ⑪ must be replaced each time the main board is removed.

>25W

7. With the >25 W radio, the gap pad ⑩ on the L-shaped ridge must be replaced each time the main board is removed.

© Tait International Limited June 2023

Figure 3.3 Components of the radio body

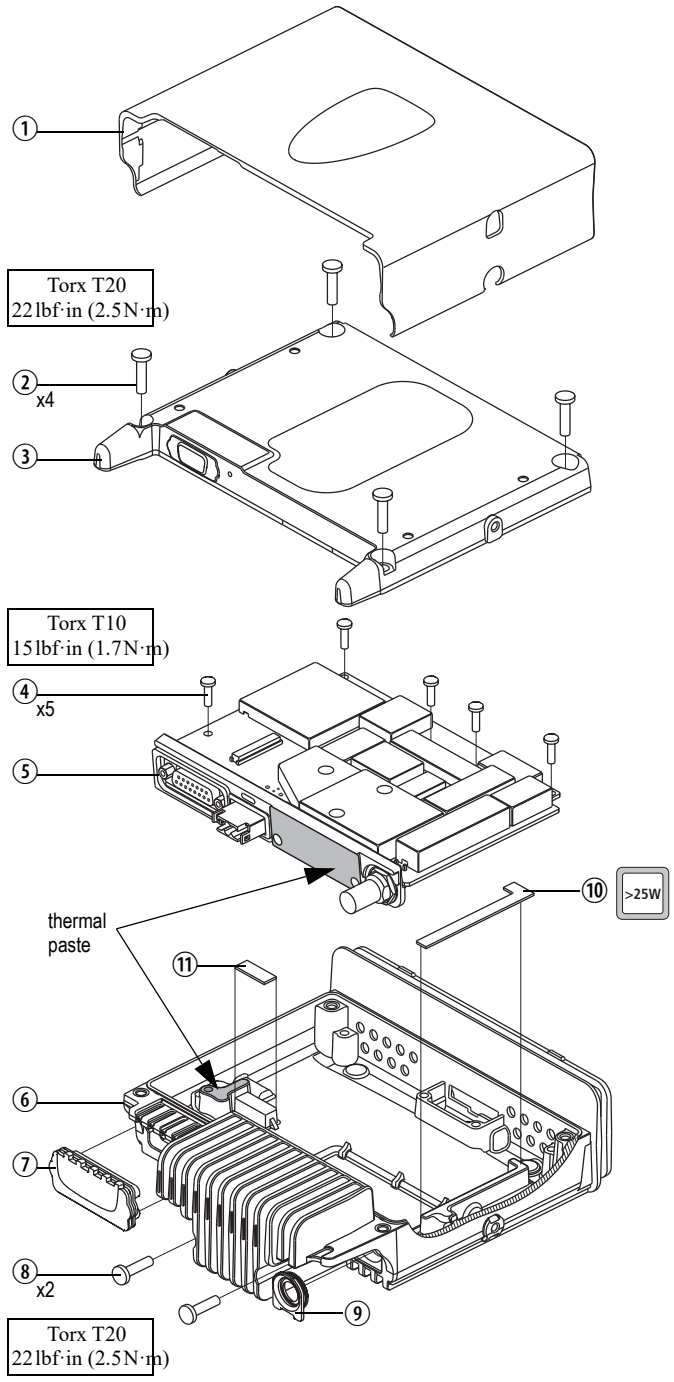

① cover
② screw M4 x 16 (x4)
③ lid assembly
④ screw M3 x 10 (x5)
⑤ main-board assembly
⑥ chassis
⑦ auxiliary connector bung
⑧ screws M4 x 16 (x2)
⑨ RF connector seal
⑩ gap pad (>25 W radio only)
⑪ gap pad 19x12 mm

© Tait International Limited June 2023

Disassembling the Main-Board Assembly

The circled numbers in this section refer to the items in Figure 3.4 on page 80. This figure shows the >25 W configuration.

1. Remove the power connector seal ⑧.
2. Use a torque-driver with a 3/16 inch (5 mm) socket to remove the D-range screwlock fasteners ⑦.
3. Use a torque-driver with a 9/16 inch (14 mm) long-reach socket to remove the RF connector nut ⑪. Also remove the lock washer ⑫.
4. Use a Torx T10 screwdriver to remove the three screws ① securing the main board ⑭ to the heat-transfer block ⑤.

   Notice Make sure not to touch the thermal paste on the heat-transfer block and the underside side of the main board. If the thermal paste is contaminated, you must re-apply thermal paste as described in "Reassembling the Main-Board Assembly" on page 82.

5. Separate the main board ⑭ from the heat-transfer block ⑤.
6. Inspect the inner foam D-range seal ④ and the outer foam seal ⑥, and replace if necessary.

7. The gap pad ⑩ (>25 W radio only) must be replaced each time the heat-transfer block is separated from the main board.

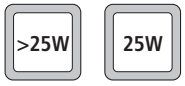

8. To replace the power connector ⑨:
   - With the >25 W radio, use a Torx T6 screwdriver to undo the two screws ②.
   - With the 25 W radio, use a Torx T10 screwdriver to undo the two screws ②.

© Tait International Limited June 2023

Figure 3.4 Components of the main-board assembly

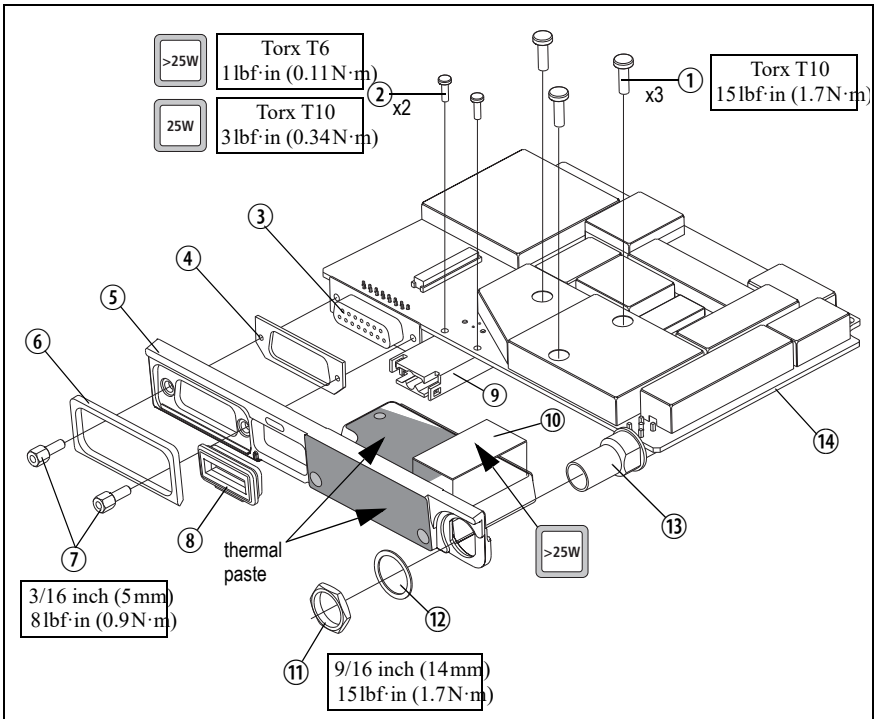

①	M3x10 screw (x3)	⑦	D-range screwlock fastener (2x)
②	>25W radios: M2.2x10 PT screw (x2) 25W radios: K30x8 PT screw (x2)	⑧	power connector seal
		⑨	power connector
		⑩	gap pad (>25W radio only)
③	auxiliary connector	⑪	RF connector nut
④	inner foam D-range seal	⑫	RF connector lock washer
⑤	heat-transfer block	⑬	RF connector
⑥	outer foam seal	⑭	main board

© Tait International Limited June 2023

Removing an Options Board (Optional)

The radio may be fitted with an options board in the lid assembly, which may or may not have an external options connector fitted in a provision in the lid assembly.

The circled numbers in this section refer to the items in Figure 3.5.

1. If an external options connector is fitted:
   - Undo the two screws ① and remove the protective rubber cap ② (if fitted).
   - Undo the two D-range screwlock fasteners ③.
2. Undo up to nine screws ⑦ and remove the options board ⑥ from the lid assembly ④.
3. If an external options connector is fitted, a foam seal for the D-range connector ⑤ is fitted to the inside of the lid. Remove the foam seal only if it is damaged.

Reassembly is carried out in reverse order of the disassembly.

Figure 3.5 Removing an options board

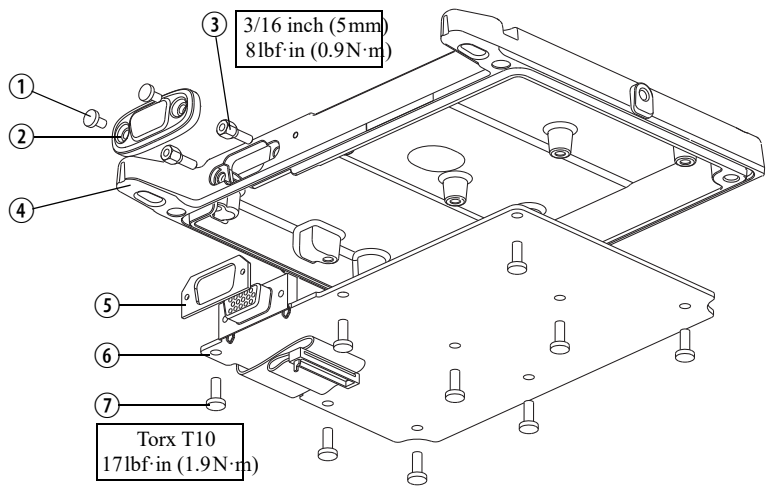

① screw 4-40x4.8 (x2)
② protective rubber cap
③ D-range screwlock fastener 4-40 (x2)
④ lid assembly
⑤ foam seal for D-range connector
⑥ options board (example)
⑦ screw M3x10, self-tapping (x9)

© Tait International Limited June 2023

3.3 Reassembling the Radio Body

Inspect all disassembled parts for damage and replace them, if necessary.

Reassembling the Main-Board Assembly

The circled numbers in this section refer to the items in Figure 3.4 on page 80. This figure shows the >25 W configuration.

1. If the power connector has been replaced:
   - With the >25 W radio, use a Torx T6 torque-driver to tighten the two screws ② to 1 lbf·in (0.11 N·m).
   - With the 25 W radio, use a Torx T10 torque-driver to tighten the two screws ② to 3 lbf·in (0.34 N·m).
2. If the outer foam seal ④ or the inner foam D-range seal ⑥ have been removed, fit new seals to the heat-transfer block ⑤.
3. With the >25 W radio, the rectangular gap pad ⑩ must be replaced each time the heat-transfer block ⑤ is separated from the main board ⑭:
   - Remove any residue of the old rectangular gap pad from the underside of main board and the heat-transfer block.
   - Peel off the transparent film on one side of the gap pad and evenly press the gap pad on the contact surface of main board (refer to Figure 3.6).
   - Peel off the transparent film on other of the gap pad.

Figure 3.6 Contact surfaces on the bottom side of the main board

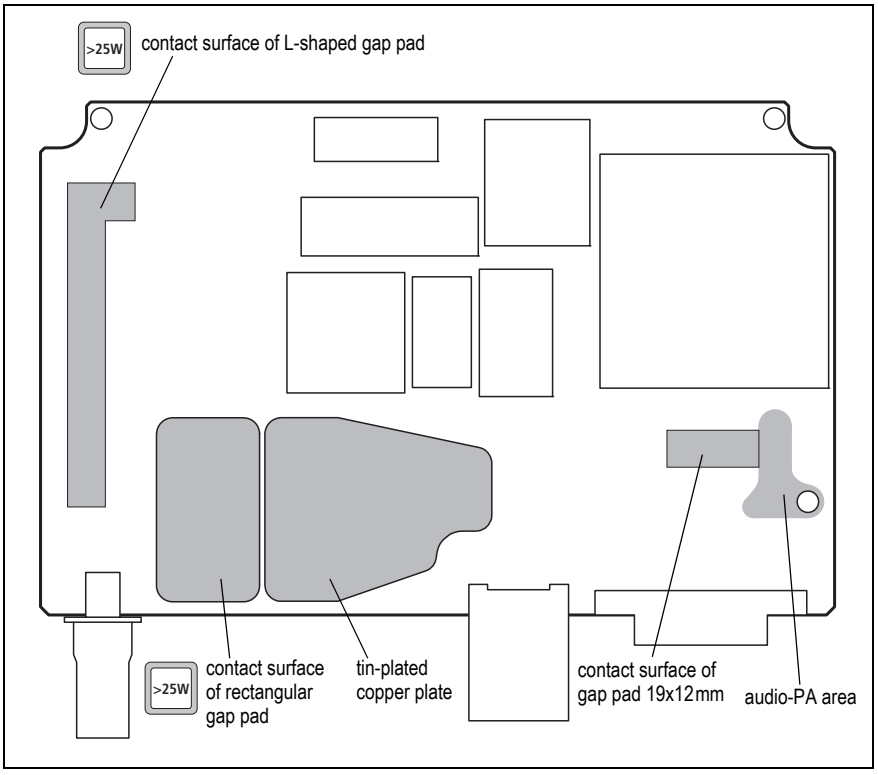

© Tait International Limited June 2023

4. If the thermal paste on the heat-transfer block ⑤ or the tin-plated copper plate of the main board ⑭ has been contaminated, new thermal paste must be applied:
   - Remove any residue of the old thermal paste from both contact surfaces.
   - Use Dow Corning 340 silicone heat-sink compound (IPN 937-00000-55).

   Notice Ensure that no bristles from the brush come loose and remain embedded in the paste. The paste needs to be completely free of contaminants.

   - Use a stiff brush to apply 0.1 cm^3 of thermal paste over the complete contact surface on the tin-plated copper plate (refer to Figure 3.6 on page 82).

5. Place the main board ⑭ in position on the heat-transfer block ⑤, and push them together to spread the thermal paste.

   Notice You must observe the following order of assembly to ensure that the main board and the connectors are not assembled under stress.

6. Use a torque-driver with a 3/16 inch (5 mm) socket to fasten the D-range screwlock fasteners ⑦ to 8 lbf·in (0.9 N·m).

7. Fit the RF connector lock washer ⑫. Use a torque-driver with a 9/16 inch (14 mm) long-reach socket to fasten the RF connector nut ⑪ to 15 lbf·in (1.7 N·m).

8. Use a torque-driver with a Torx T10 bit to fasten the three screws ① to 15 lbf·in (1.7 N·m).

9. Loosen both the D-range screwlock fasteners ⑦ and the RF connector nut ⑪.

10. Re-tighten both the D-range screwlock fasteners ⑦ and the RF connector nut ⑪ to the torques indicated in steps 7. and 8.

11. Fit the power connector seal ⑧.

© Tait International Limited June 2023

Fitting the Main-Board Assembly to the Chassis

The circled numbers in this section refer to the items in Figure 3.3 on page 78. This figure shows the >25 W configuration.

1. The gap pad 19x12 mm ⑪ must be replaced each time the main-board assembly ⑤ is removed from the chassis ⑥.

2. With the >25 W radio, the L-shaped gap pad ⑩ must be replaced each time the main-board assembly ⑤ is removed from the chassis ⑥:
   - Remove any residue of the old gap pad from the audio-PA area on the underside of the main board (refer to Figure 3.6 on page 82) and the L-shaped ridge of the chassis (refer to Figure 3.3 on page 78).
   - Peel off the transparent film on one side of the gap pad and evenly press the gap pad on the L-shaped ridge of the chassis.
   - Peel off the transparent film on other of the gap pad.

3. If the thermal paste on the heat-transfer block or the underside of the main board has been contaminated, new thermal paste must be applied:
   - Remove any residue of the old thermal paste from both contact surfaces.
   - Use Dow Corning 340 silicone heat-sink compound (IPN 937-00000-55).

   Notice Ensure that no bristles from the brush come loose and remain embedded in the paste. The paste needs to be completely free of contaminants.

   - Use a stiff brush to apply 0.1 cm^3 of thermal paste on the heat-transfer block (refer to Figure 3.3 on page 78).
   - Use a stiff brush to apply 0.01 cm^3 of thermal paste on the audio-PA heat sink of the chassis (refer to Figure 3.3 on page 78)

4. Place the main-board assembly ⑤ in position in the chassis ⑥.

5. Loosely screw in the two screws ⑧ through the heat-transfer block by hand.

6. While pressing down firmly on the diagonal edge of the PAD TOP can (refer to Figure 3.7), use a Torx T20 torque-driver to tighten the two screws ⑧ to 22 lbf·in (2.5 N·m). This will ensure that the main board is seated correctly on the bosses for the five internal screws ④.

© Tait International Limited June 2023

Figure 3.7 PAD can on the top side of the main board

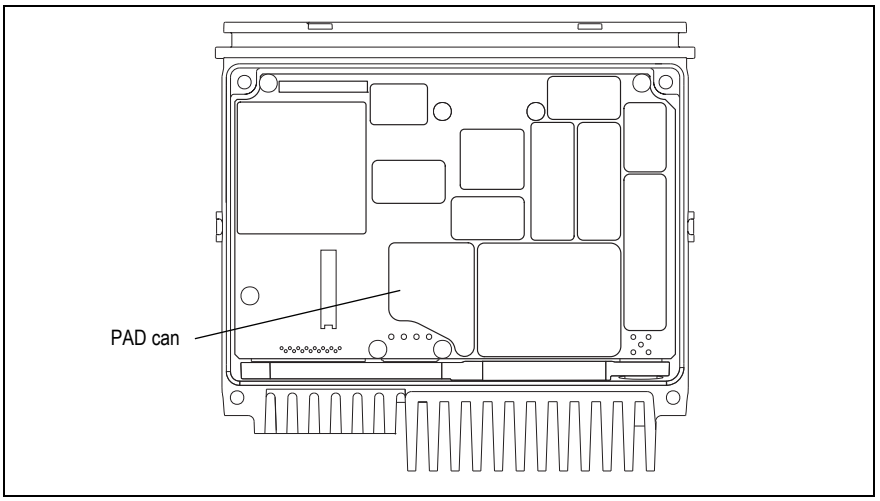

7. Clean off any excess thermal paste on the heat-transfer block.

8. Screw in the five screws ④ through the main board by hand as far as possible. Use a Torx T10 torque-driver to tighten the screws to 17 lbf·in (1.9 N·m).

9. Fit the RF connector seal ⑨. Ensure that the seal is properly seated around its entire periphery.

10. If an auxiliary connector bung ⑦ was fitted, fit the bung.

Closing the Radio Body

The circled numbers in this section refer to the items in Figure 3.3 on page 78.

1. If an internal options board is fitted inside the lid, connect the loom to the internal options microphone input.

2. Inspect the main seal in the lid for damage, and replace if necessary.

3. Place the lid assembly ③ on the chassis ⑥.

4. Use a Torx T20 torque-driver to tighten the four screws ② to 22 lbf·in (2.5 N·m).

5. Slide the cover ① over the radio body and snap holes in the side of the cover over the screw bosses.

6. Inspect the control head seal for damage, and replace if necessary.

© Tait International Limited June 2023

3.4 Disassembling and Reassembling the Control Head

3.4.1 Graphical Control Head

Disassemble only as much as necessary to replace the defective parts. Reassembly is carried out in reverse order of the disassembly.

The circled numbers in this section refer to the items in Figure 3.9 on page 88.

The connectors of the control head board and the orientation of the speaker and speaker clamp are illustrated in Figure 3.8.

1. With your fingers, pull off the volume control knob ⑰.
   Do not use any tools as this might cause damage.

2. Unscrew the two screws ① and remove the adaptor flange ②.

3. Disconnect the control head loom ③.

4. Note whether the speaker is connected or disconnected. If it is connected, disconnect the speaker cable from the speaker connector of the control head board ⑤ (refer to Figure 3.8). Note that the radio must be returned to the customer in its original configuration.

5. Release the lock of the LCD connector and unplug the loom of the LCD assembly ⑫ (refer to Figure 3.8). Note that the loom runs through a slot in the space frame ⑨.

Figure 3.8 Speaker orientation and connectors of the control head board

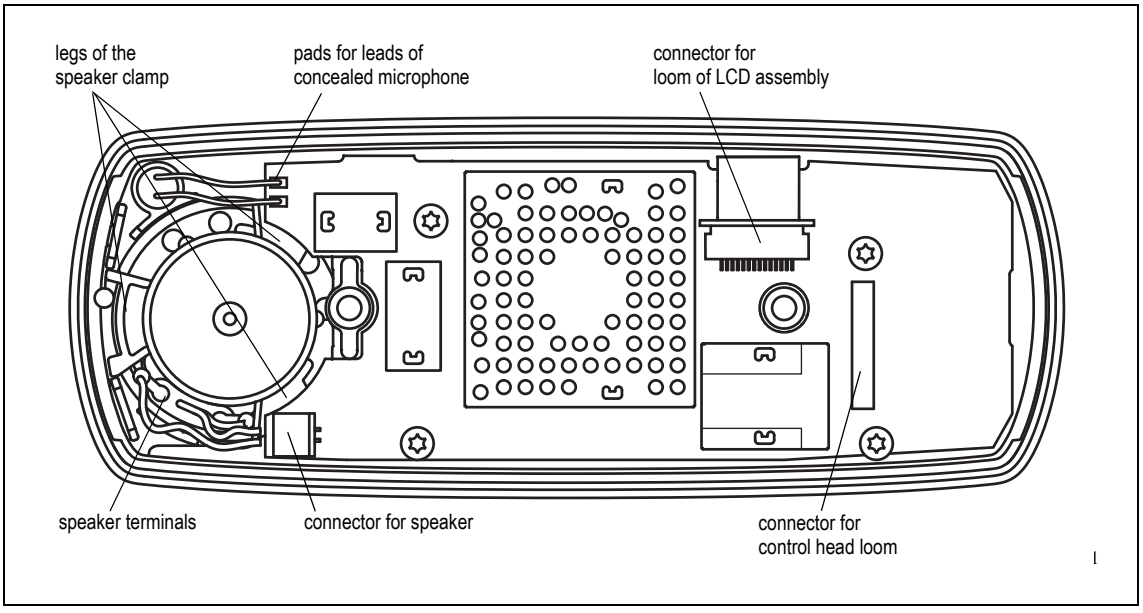

6. Unscrew the four screws ④ and remove the control head board ⑤.

© Tait International Limited June 2023

7. If a concealed microphone is fitted, pull the concealed microphone ⑮ capsule out of its rubber seal when removing the control head-board ⑤. If necessary, unsolder the leads from the pads on the control head board (refer to Figure 3.8).

8. Remove the light pipes ⑦ and ⑧.

9. The space frame ⑨ clips into three clips of the front panel. Unclip the spaceframe and remove it along with the two seals ⑥. Check the seals ⑥ and replace them, if necessary.

10. Remove the speaker ⑪ and speaker clamp ⑩.

Notice When fitting the speaker and the speaker clamp, observe the orientation of the speaker terminals. Make sure that the larger of the three legs of the speaker clamp is placed between the two clips of the front panel assembly as shown in Figure 3.8 on page 86.

11. Remove the LCD assembly ⑫, main keypad ⑬, and power keypad ⑭.

Notice When replacing the LCD, carefully remove the protective plastic film from the LCD. Take care not to scratch the soft polarizer material on the top side of the LCD.

The LCD seal is replaced whenever the LCD is replaced.

© Tait International Limited June 2023

Figure 3.9 Components of the graphical control head

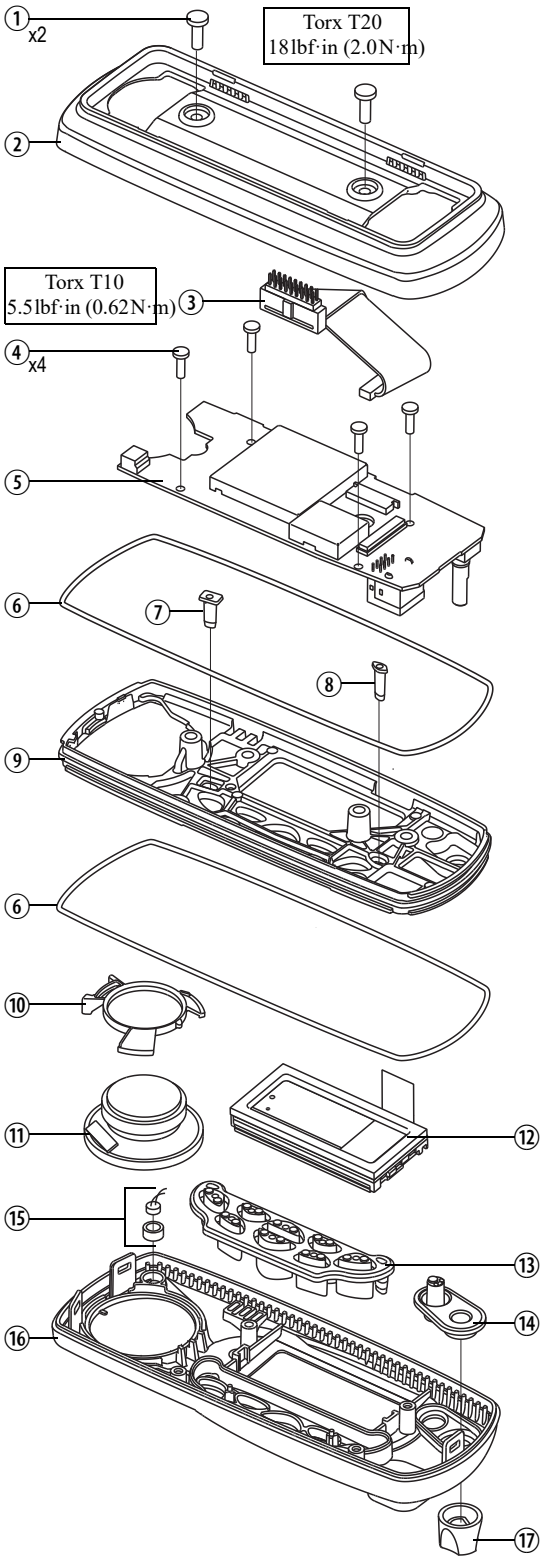

① M4 x 12 Taptite screw (x2)
② adaptor flange
③ control head loom assembly with female-female adapter
④ 3 x 10 PT screw (x4)
⑤ control head board
⑥ space frame seal (x2)
⑦ short light pipe
⑧ long light pipe
⑨ space frame
⑩ speaker clamp
⑪ speaker
⑫ LCD assembly (including LCD seal)
⑬ main keypad
⑭ power keypad
⑮ concealed microphone
⑯ front panel assembly
⑰ knob for volume-control potentiometer

© Tait International Limited June 2023

3.4.2 2- or 3-Digit Control Head

Disassemble only as much as necessary to replace the defective parts. Reassembly is carried out in reverse order of the disassembly.

The circled numbers in this section refer to the items in Figure 3.11 on page 90.

1. With your fingers, pull off the volume control knob ⑮.
   Do not use any tools as this might cause damage.

2. Note whether the speaker ⑧ is connected or disconnected. If it is connected, disconnect the speaker cable from the speaker connector of the control-head board (refer to Figure 3.10). Note that the radio must be returned to the customer in its original configuration.

3. Use a Torx T10 screwdriver to unscrew the three screws ③ securing the control-head board. The screws are labelled screw 1 to screw 3; these numbers are also inscribed on the PCB. The control-head board is now held down only by the clips labelled clip 1 to clip 3 in Figure 3.10.

4. While pressing on the shaft of the volume-control potentiometer, push clip 2, clip 1 and then clip 3 away from the control-head board. The board will be freed from the space frame. Remove the board.

Figure 3.10 Speaker orientation, connectors and clips of the 2- or 3-digit control-head board

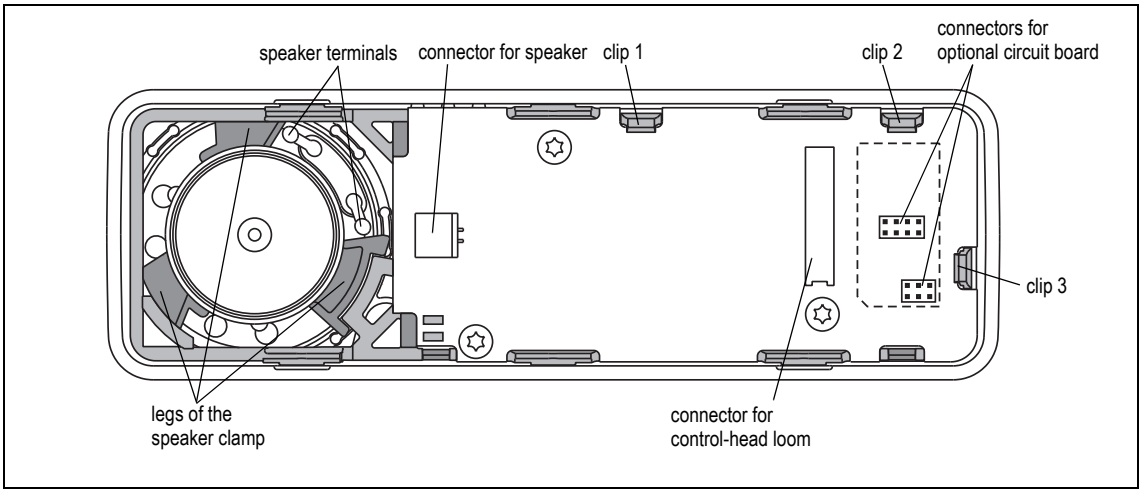

© Tait International Limited June 2023

5. While pulling upwards on the space frame ⑥ at the corner where the microphone connector is situated, release the clips labelled ❶ to ❻ in Figure 3.11 in the order: ❶ and ❷, ❸ and ❹, and then ❺ and ❻. To release each clip use a 3/16 inch (5 mm) flat-bladed screwdriver to lever the clip out of its recess. Pulling on the space frame helps release the clips.

Notice When fitting the space frame ⑥, make sure that the clips labelled ❶ to ❻ fully snap into the front panel assembly. If necessary, use a flat-bladed screwdriver to push down the clips until they snap into place.

Figure 3.11 Components of the 2- or 3-digit control head

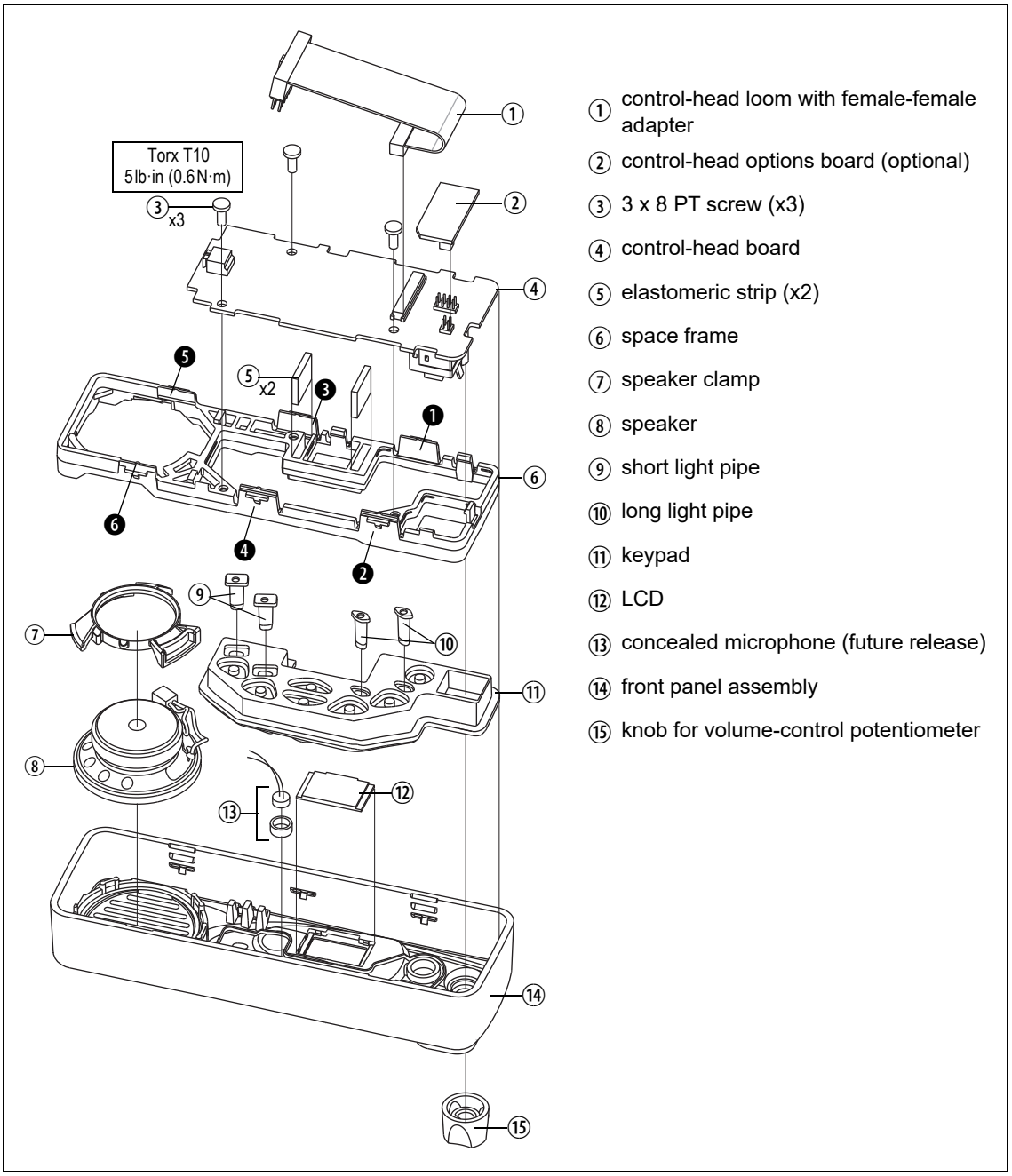

© Tait International Limited June 2023

6. Remove the elastomeric strips ⑤, speaker clamp ⑦, speaker ⑧, LCD ⑫, keypad ⑪, light pipes ⑨ and ⑩.

Notice When replacing the LCD, carefully remove the protective plastic film from the LCD. Take care not to scratch the soft polarizer material on the top side of the LCD.

Notice When fitting the speaker and the speaker clamp, observe the orientation of the speaker terminals. Make sure that the legs of the speaker clamp are positioned under the space frame as shown in Figure 3.10 on page 89.

© Tait International Limited June 2023

3.4.3 Programming Control Head

Disassemble only as much as necessary to replace the defective parts. Reassembly is carried out in reverse order of the disassembly.

The circled numbers in this section refer to the items in Figure 3.12.

1. Release the clip of the PCB bracket ④ and remove the control-head board ①.

2. Disconnect the control-head loom ② from the control-head-board ①.

3. Use a Torx T10 screwdriver to unscrew the four screws ③ and remove the PCB bracket ④.

Figure 3.12 Components of the programming control head

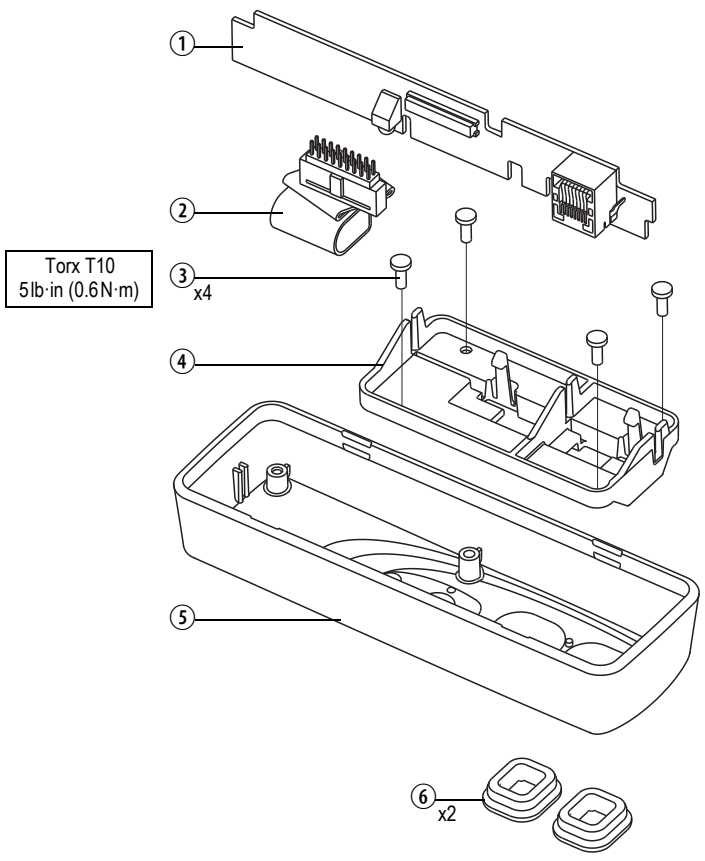

① control-head board
② control-head loom with female-female adapter
③ 3 x 8 PT screw (x4)
④ PCB bracket
⑤ front panel
⑥ RJ45 bung (x2)

© Tait International Limited June 2023

3.4.4 Handheld Control Head

Disassemble only as much as necessary to replace the defective parts. Reassembly is carried out in reverse order of the disassembly. The connectors and board mounted user interface components are illustrated in Figure 3.13 (main board) and Figure 3.14 (UI board).

The circled numbers in this section refer to the items in Figure 3.15 on page 95.

Notice Take care when disconnecting looms during the disassembly process. Refer to the instructions outlined in "Disconnect Looms and FPC Cables Carefully" on page 35.

Removing the Programming Cover

1. Insert the supplied programming cover tool ㉔ into the matching hole in the programming cover ㉓. Alternatively, use an 8 mm Allen key with a 'flat' rather than a 'ball' head instead of the supplied cover tool.
2. Rotate the tool ¼ turn counterclockwise to unlock the programming cover.
3. Remove the programming cover.

   When reinstalling the programming cover, rotate the tool ¼ turn clockwise, and ensure that the seal on the programming cover is undamaged and is seated correctly.

Removing the Rear Panel

1. Unscrew the five rear cover screws ㉒ using a Torx T7 driver.

   When reassembling, use a Torx T7 torque-driver to tighten the screws to 4.5 lbf·in (0.5 N·m).
2. Remove the rear panel ⑳, leaving the rear panel seal ㉑ in place.

   When reassembling, ensure the seal is undamaged and is seated correctly around the entire perimeter of the rear panel.
3. Unplug the hookswitch loom ⑲ from the main board ⑮.

   The rear panel is now separate from the front panel assembly.

Removing the Main Board

1. Unplug the microphone loom ⑥ and curly cord connector ⑰ from the main board ⑮.
2. Lift the right side of the main board away from the front panel assembly, to expose the loom between the main and UI boards.
3. Disconnect the loom that connects the main board to the UI board.

   The main board is now separate from the front panel assembly.

© Tait International Limited June 2023

Figure 3.13 Connectors of the hand-held control head—main board

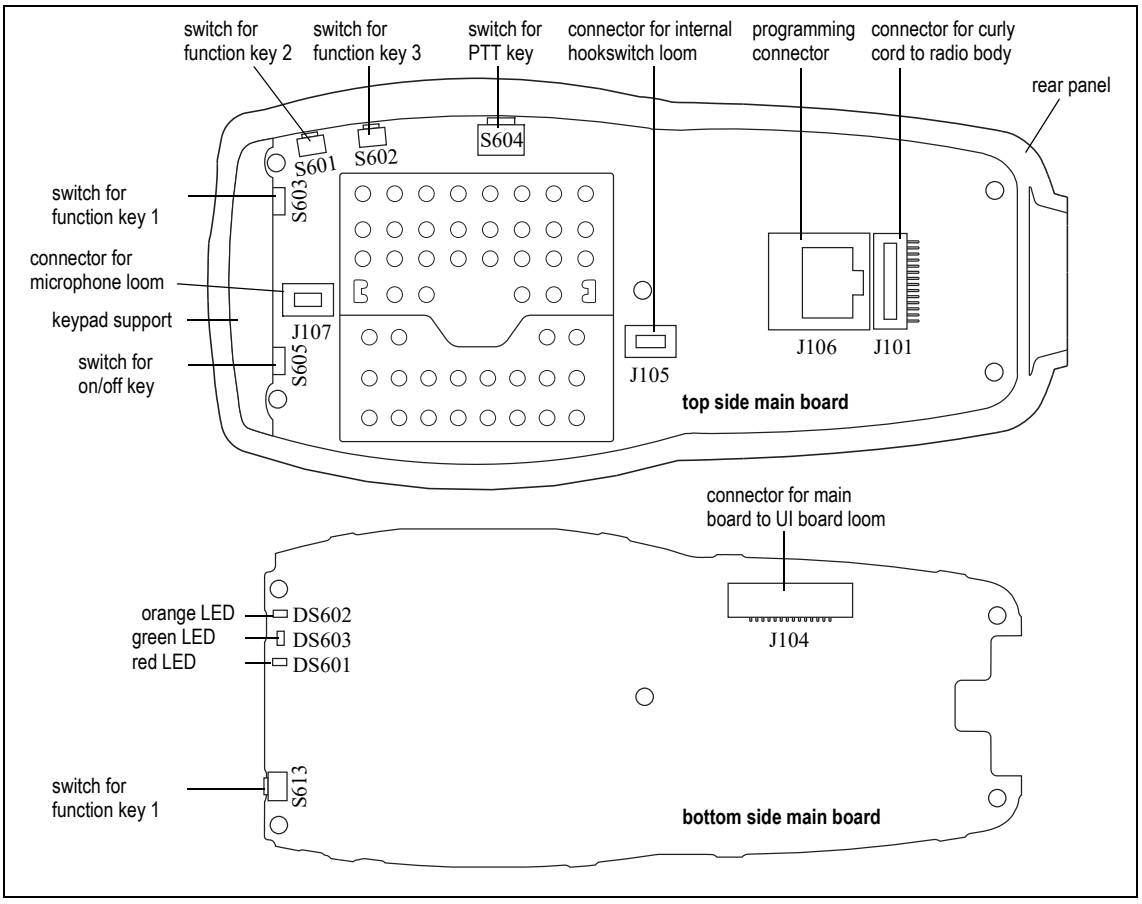

Removing the LCD Assembly and UI Board

1. Unscrew the five UI board screws ⑭ using a Torx T6 driver.

   When reassembling, use a Torx T6 torque-driver to tighten the screws to 2 lbf·in (0.2 N·m).

2. Unplug the LCD assembly loom from the UI board ⑬.

3. Remove the LCD assembly ⑪ and UI board from the front panel assembly.

Figure 3.14 Connectors of the hand-held control head—UI board

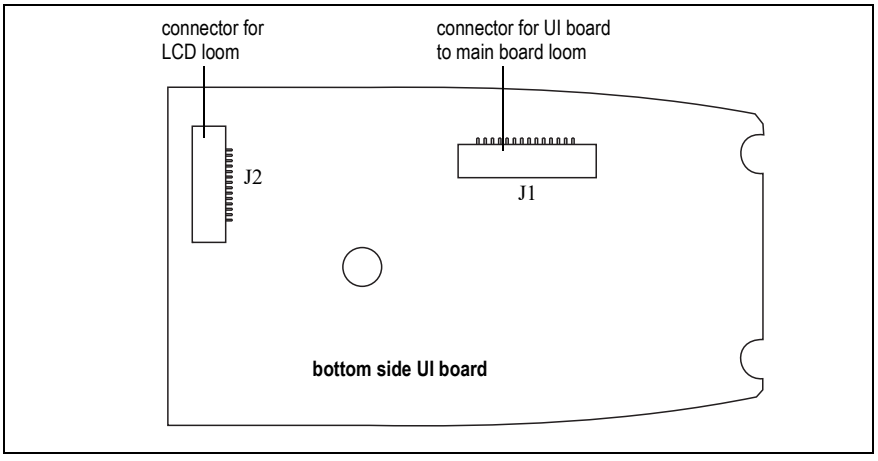

© Tait International Limited June 2023

Figure 3.15 Components of the hand-held control head

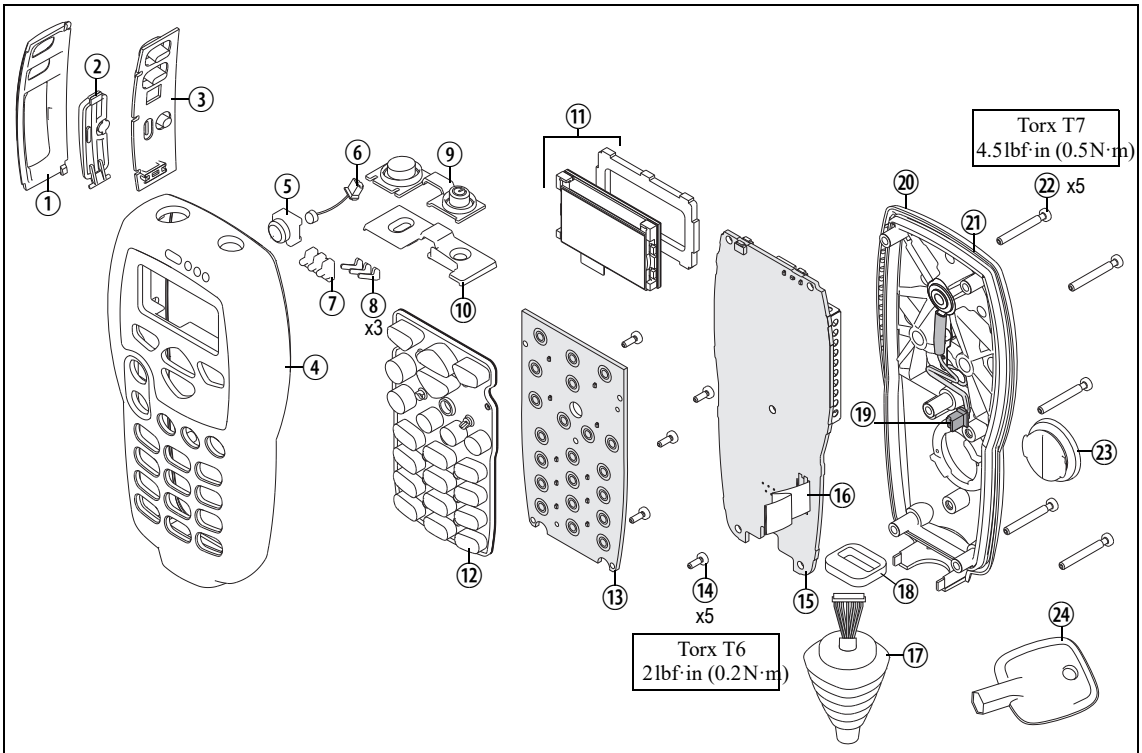

①	PTT keypad frame	⑬	user interface (UI) board
②	PTT keypad actuator	⑭	K18x5 T6 PT screw (x5)
③	PTT/function key keypad	⑮	main board
④	front panel	⑯	main to UI board loom
⑤	microphone grommet	⑰	curly cord to radio body
⑥	microphone and loom	⑱	foam tape
⑦	light spreader	⑲	hookswitch loom
⑧	light pipes (x3)[1]	⑳	rear panel
⑨	top keypad	㉑	rear panel seal
⑩	keypad support	㉒	K25x20 T7 PT screw (x5)
⑪	LCD assembly, including loom and foam tape	㉓	programming cover and seal
⑫	main keypad	㉔	tool for programming connector cover

1. For hand-held control heads other than black: A 7mm length of heat shrink (IPN 400-00020-06) is slid over each light pipe, to provide additional light shielding.

© Tait International Limited June 2023

4 Servicing Procedures

Notice Before starting to service a mobile radio read Chapter 2, General Servicing Information.

When you receive a radio for servicing, perform the tasks described here, skipping any that do not apply:

4.1 Initial Tasks

Initial tasks help with fault diagnosis and ensure that you do the repair in the proper way. Complete the full set of tasks as described here, **in the order shown**.

Do not omit the initial administration.

Complete this sequence of initial tasks for every radio received for servicing:

1. Complete the Initial Administration
2. Perform a Visual Inspection
3. Power Up the Radio
4. Read and Save the Programming File
5. Obtain the Details of the Software Feature Enabler (SFE)
6. Read and Save the Calibration File

Task 1 — Complete the Initial Administration

When a radio is received for repair, details of the customer and the fault are recorded in a fault database. State whether the reported fault indicates:

- mechanical damage or loss of a mechanical part
- failure of a radio function
- mechanical damage and failure of a radio function

© Tait International Limited June 2023

Task 2 — Perform a Visual Inspection

Visually check the exterior of the radio for mechanical damage or loss. Do this even if the reported fault indicates a function failure only. Inspect the following:

- knob for volume-control potentiometer
- microphone grommet
- rubber seal for RF connector
- bung for auxiliary connector
- bung for aperture for external options connector.

The bung for aperture for external options connector should be replaced by a cover seal if an external options connector is present. All the parts are illustrated in "Spare Parts" on page 179. Except for the microphone grommet, if any of these parts is missing or damaged, replace it as described below. In the case of the microphone grommet, refer to the accessories section for the repair procedure.

Replace Damaged or Missing Knob

Remove the volume-control knob if it is damaged. Push the replacement knob onto the shaft of the volume-control potentiometer. Ensure that the knob turns freely.

Replace Damaged or Missing Seals and Bungs

Remove any damaged seal or bung. Obtain a replacement seal for the RF connector or a replacement bung from Spares kit 2. Order a replacement cover seal (and screws) from your regional Tait office; the IPNs of the parts are listed in "Spare Parts" on page 179. When fitting a replacement bung, ensure that it is not upside down and that it is properly seated. To fit the seal for the RF connector, first fit the upper part of the seal and then press down around the sides of the seal to the bottom. Ensure that the seal is properly seated along its entire length.

Check for Additional Damage

Also check for damage to exterior parts that can be replaced only by partly disassembling the radio. These parts are:

- cover assembly for radio body
- keys, lens and LCD of control head
- front panel of control head.

In the case of the front panel, inspect particularly the light pipes for the STATUS LEDs and the membrane behind the speaker grille. If the radio is reported to have a functional fault, continue with Task 3. Any additional mechanical damage will be repaired during the course of rectifying the functional fault. If the radio has no functional fault, repair any additional damage as described below; conclude with the tasks of "Final Tasks" on page 108.

Repair Damaged Control Head

If the control head is damaged, detach it from the radio body as described in "Removing and Mounting the Control Head" on page 75. The procedure includes inspecting the interior of the control head for evidence of other damage. Disassemble the control head and repair all damage as described

© Tait International Limited June 2023

in "Disassembling and Reassembling the Control Head" on page 86. Then reassemble the control head and re-attach it to the radio body.

Task 3 — Power Up the Radio

Set up the radio test equipment and connect the radio to it. See "Setting Up the Test Equipment" on page 61.

1. Apply power to the radio. If the radio is programmed not to start on power-on, press the ON/OFF switch.

If the radio powers up but keeps resetting itself, check the power-sensing circuitry. If the radio powers up but fails to enter user-mode, or displays an error, refer to Table 4.1 on page 103.

2. If the radio powers up successfully, go to Task 4. If it does not, go to Step 3.
3. Check the fuses, cables, and the power supply.
4. Check whether the control head loom, the control head or the radio body is faulty by first connecting a spare control head loom and then a spare control head.

The radio may fail to power up if the firmware of the spare control head doesn't match the firmware of the radio body. If either firmware version is unknown, you can try to use a RJ-45 control head to power up the radio (if available).

5. If the control head is faulty, check the control head connector (pin 2: +13V8, pin 14: +3V3, pin 6: AGND), and repair or replace the control head board.
6. Do one of the following:
   - If able to repair the radio **without replacing the main board**, go to the next task.
   - Replace the main board, reassemble the radio and go to "Final Tasks" on page 108.
   - If unable to repair the radio, reassemble the radio and go to "Final Tasks" on page 108.

© Tait International Limited June 2023

Task 4 — Read and Save the Programming File

Notice Always read and the programming file before starting to service the radio. It is especially important to do this if updating the firmware and replacing or installing a board.

If the radio powers up, read the radio's programming file or upload a default file:

1. Once the radio is on and startup is complete, use the relevant programming application and click the Read icon to **read the programming database** that is currently in the radio.
   - If the application reads the programming database from the radio, save a copy of the programming database to the test computer and go to the next task (Task 5 Obtain the Details of the Software Feature Enabler (SFE)).
   - If the application cannot read the programming database, continue with Step 2 of the current task (below).
2. If it seems that the file cannot be read, cycle the power to the radio and again attempt to read the file. First cycling the power is essential if the radio is programmed to power up in transparent-data mode (1200 baud FFSK) and if the selected data port is the microphone connector.
3. Make sure that:
   - the radio is connected to the correct serial port of the test computer
   - the Mode switch of the Test Unit (TOPA-SV-024) is set to **Rx**.
   - the programming application is set up correctly

ⓘ If necessary, see the troubleshooting section in the Help for the programming application.

4. Repeat Step 1 above.
   - If the application reads the programming database from the radio, save a copy of the programming database to the test computer and go to the next task (Task 5).
   - If the application cannot read the programming database, continue with Step 5 of the current task (below).
5. Check whether the control head loom, the control head or the radio body is faulty by first connecting a spare control head loom and then a spare control head.
6. If the control head is faulty, check:
   - the control head connector (pin 3: TXD, pin 7: RXD),
   - the microphone connector,
   - the path between the control head connector and the microphone connector,

   and repair or replace the control head board.

© Tait International Limited June 2023

7. Repeat Step 1 above:
   - If the application reads the programming file, save a copy of the file to the test computer and go to the next task (Task 5).
   - If the application cannot read the programming file, continue with Step 8 of the current task (below).

8. Set up a suitable **default programming file** and upload it to the radio:
   - If the upload is successful, go to the next task (Task 5).
   - If the upload fails, replace the main board. Then set up a suitable default programming file and upload that to the radio. If the upload is successful, go to the next task (Task 5). If the upload fails, reassemble the radio and go to "Final Tasks" on page 108.

Task 5 — Obtain the Details of the Software Feature Enabler (SFE)

Use the programming application to obtain and record the details of any software-enabled features (Tools > Optional Features).

Refer to the Help for the programming application.

Task 6 — Read and Save the Calibration File

Notice Always read and save the calibration file before starting to service the radio. Although adjustments are still needed, the original calibration file, read from the radio, is the best starting point.

1. With the radio still turned on, use the calibration application to read the calibration file:
   - If the application reads the calibration file, save a copy of the file to the test computer and go to Task 7.
   - If the application cannot read the calibration file, continue with the Step 2 of the current task (below).

2. Set up a suitable **default calibration file** and upload it to the radio:
   - If the upload is successful, go to Task 7.
   - If the upload fails, go to "Final Tasks" on page 108.

Task 7 — View the Firmware Version

Depending on the customer, it may be required to return the radio with either the same firmware version or to update the radio to the latest firmware version.

ⓘ It is important to record the installed firmware version in case the main board needs to be replaced.

To view the installed firmware version number, do one of the following:

- Use the radio menu to display the firmware version number.
- From the relevant programming application, select Radio > Interrogate. The screen that appears displays the product code, radio band and

© Tait International Limited June 2023

model, and firmware, hardware and database version numbers.

Task 8 — Update the Firmware (if necessary)

Depending on the customer, it may be required to return the radio with either the same firmware version or to update the radio to the latest firmware version.

If necessary, contact Technical Support to obtain the relevant firmware version.

To install a firmware upgrade on the radio:

- From the relevant programming application select Tools > Download. For details, see the Help for the programming application. The firmware is transferred from the computer to the radio.
- Upload the saved programming file to the radio.
- Upload the saved calibration file to the radio.

Task 9 — Calibrate the Radio

It is good practice to calibrate a TDMA radio during servicing.

- With the radio still connected to the test equipment, use the calibration application to calibrate the radio. Refer to the Help for the calibration application.
- Save a copy of the calibration file to the test computer.

4.2 Checking the User Interface

ⓘ This procedure does not apply to the programming control head.

Use the relevant programming application to identify any user interface behavior that is specific to the radio under repair. This includes startup behavior, settings for quiet/silent modes, programmed function keys, channels, and scan groups.

Check the user interface as follows:

1. Use the programming application to activate backlighting, deactivate silent and quiet modes, and view the programmed function keys, channels and scan groups.
2. Turn on the radio, make sure that the volume control is not set to low, and check the start-up sequence:
   - the LEDs light up red briefly
   - the speaker gives two short beeps
   - LCD and keypad backlighting activates
   - the LCD displays a power-up message then a channel number, or an error message.
3. Check the following elements of the user interface:

© Tait International Limited June 2023

- volume control: Use CCTM command **1010** to read the volume potentiometer. The returned value should be between 0 and 255.
- LCD: Check visually or use CCTM command **1006 1** to switch on all LCD elements. Power-cycle the radio to reset the LCD to its original state.
- PTT key: While pressing the PTT key, the transmit symbol or should appear on the radio display (unless transmit is inhibited on the selected channel).
- scroll and selection keys: Scroll through all settings and observe the radio display.
- function keys: Check whether the programmed function is activated.
- keypad: Use CCTM command **1009 1** to turn on keypad notification. Check that each keypress returns a different number. CCTM command **1009 0** turns keypad notification off.
- backlighting (if programmed): Any keypress should activate backlighting.

4. Do one of the following:
   - If there is no fault in the user interface, go to "Responding to Error Messages" on page 103.
   - If there is a fault in the user interface, disassemble the radio as described in Chapter 3, Disassembly and Reassembly.
   - Repair or replace any damaged parts. Retest the radio and record whether the repair was successful. If the problem is solved go straight to "Final Tasks" on page 108.

© Tait International Limited June 2023

4.3 Responding to Error Messages

If the **radio** indicates an error message at any stage see Table 4.1 and take the action indicated. See also “Visual and Audible Indicators” on page 71.

Table 4.1 Error messages

Error message	Corrective action
Error E0001 Unknown	Turn the radio off and then back on.
Error E0002 Unknown	Continue with servicing tasks to locate the problem.
Error E0003 Corrupt FW	Re-download the radio’s firmware.
System error 0x*abcdefgh*	Turn the radio off and then back on. If the system error persists, consult the product's technical notes for further information on the system error. If there is no relevant information in the technical notes, continue with servicing tasks to locate the problem. To capture details of the system error, use CCTM command **204**.
Temperature threshold exceeded	Wait until the radio has cooled down.
Cannot tx	Go to Task 4.4 on page 104.
Programming mode, invalid radio ...	Reprogram the radio with a new programming database. If the problem persists, update or reload the radio’s firmware, and reprogram the radio’s calibration database.

© Tait International Limited June 2023

4.4 Checking the Transmit and Transmit-Audio Functions

Complete this task only if the reported fault indicates a problem with these functions.

Notice Do not allow the radio to overheat during test transmissions or transmitter faultfinding. Before starting this task see "Observe Transmitter Safety Precautions" on page 37.

The radio may fail to transmit if:

- the synthesizer is not in lock
- the carrier power is wrong or there is no carrier power
- the incorrect frequency was entered when the radio was programmed
- there is no modulation, indicating a problem with the CODEC-audio circuitry or with the microphone

If you know the cause of the problem, replace the damaged part. Otherwise complete the following steps:

1. Use CCTM command **101** as described in "CCTM Commands" on page 66 to set the **transmit frequency** to the bottom of the band.

2. Set the radio to transmit mode (CCTM command **33**).

3. Read the lock status (CCTM command **72**):
   - If the value returned **is 110**, the frequency synthesizer is in lock as it should be. Continue with Step 4 of the current task (below).
   - If the value returned **is not 110**, the synthesizer is not in lock. Replace the main board or repair the **frequency synthesizer circuitry**. Retest the radio and record whether the repair was successful. If the problem is solved go to "Final Tasks" on page 108.

4. Use CCTM command **101** as above to set the transmit frequency to the top of the band.

5. Repeat Step 2 to Step 4 with the transmit frequency set to the top of the band.

Notice Do not operate the transmitter without a suitable antenna load. The radio is designed to operate with a 50Ω termination impedance. Transmitting without a suitable load can damage the power output stage of the transmitter.

Notice Ensure that all instruments are protected at all times from accidental transmissions. Under certain circumstances, the microprocessor can activate the transmitter.

© Tait International Limited June 2023

6. Use CCTM command **33** to set the radio to transmit. Set the transmit power level to very low (CCTM command **326 1**).

7. Connect an RF power meter and measure the carrier power (or 'transmit power') of the radio.

8. Do one of the following:
   - If the carrier power is correct, set the carrier power to high (CCTM command **326 4**) and repeat Step 7. Then continue with Step 9 of the current task (below).
   - If the carrier power is incorrect, recalibrate the radio and then measure the carrier power again. If recalibration does not solve the problem, replace the main board or repair the **transmitter circuitry**. Retest the radio and record whether the repair was successful. If the problem is solved go to "Final Tasks" on page 108.

9. If no audio is being transmitted, check the **microphone**.
   a. Use a known good microphone to eliminate the microphone as the source of the problem.
   b. Test whether the radio can transmit audio:
   - If the radio can transmit audio, the original microphone was the source of the fault. Reassemble the radio and go to "Final Tasks" on page 108.
   - If the radio still cannot transmit audio, continue with Step 10 of the current task (below). When you reassemble the radio, use the original front panel.

10. Check whether the speaker is the source of the fault, as described in "Speaker Faulty" on page 136.

11. Replace the main board or repair the **audio circuitry**. Retest the radio and record whether the repair was successful. If the problem is solved go to "Final Tasks" on page 108.

© Tait International Limited June 2023

4.5 Check the Receive and Receive-Audio Functions

Complete this task if the reported fault indicates a problem with the receive and receive-audio functions.

The radio may fail to receive if:

- the synthesizer is not in lock
- no carrier is detected
- the speaker is faulty
- the volume potentiometer (volume control) is faulty
- there is no modulation

If you already know the cause of the problem, replace the damaged part. Otherwise complete the following steps:

1. Use CCTM command **101** as described in "CCTM Commands" on page 66 to set the **receive frequency** to the bottom of the band.

2. Use CCTM command **72** to read the lock status:
   - If the returned value **is 111**, the frequency synthesizer is in lock as it should be. Continue with Step 3 of the current task (below).
   - If the returned value **is not 111**, the frequency synthesizer is not in lock.

   Replace the RF board or repair the **frequency synthesizer circuitry**. Retest the radio and record whether the repair was successful. Then go to "Final Tasks" on page 108.

3. Use CCTM command **101** as above to set the **receive frequency** to the top of the band and then repeat Step 2.

4. Remove any RF carrier. Then use CCTM command **63** to read the **RSSI** value. Record the RSSI value.
   - In CCTM mode, command **63** returns the signal strength in steps of 0.1 dBm when a receive signal is detected. The speaker operates.
     In user mode, a conventional radio displays RSSI bars, if these are enabled. The green LED is lit.

5. Apply an unmodulated –47 dBm signal to the receive channel.

6. Use CCTM command **63** to read the RSSI value again. Record the new RSSI value.
   - If the new RSSI value is greater than the RSSI value recorded previously, the receiver is detecting the carrier correctly. Continue with Step 7 of the current task (below).
   - If the new RSSI value is not greater than the RSSI value recorded

© Tait International Limited June 2023

previously, recalibrate the radio and check the RSSI value again.

If recalibration does not solve the problem, replace the RF board or repair the **receiver circuitry**. Retest the radio and record whether the repair was successful. Then go to "Final Tasks" on page 108.

7. Feed an unmodulated –117 dBm signal to the receive channel and make sure that the **squelch** opens.

All receive signalling must be disabled before the squelch will open.

8. Check whether the speaker is the source of the fault, as described in "Speaker Faulty" on page 136:

9. Test whether the radio can output audio:
   - If the radio can output audio, the original speaker was the source of the fault. Reassemble the radio and go to "Final Tasks" on page 108.
   - If the radio cannot output audio, continue with Step 10 of the current task (below). Use the original front panel when you reassemble the radio.

10. Check the status of the **volume potentiometer**. CCTM command **111** returns a volume setting of 0 to 255. Turn the volume knob on the radio. The second value returned should vary as you do so:
    - If the value varies appropriately, the volume potentiometer is good. Continue with Step 11 of the current task (below).
    - If the volume potentiometer is faulty, repair or replace it. See Chapter 3, Disassembly and Reassembly. Retest the radio and record whether the repair was successful. If the problem is solved go straight to "Final Tasks" on page 108.

11. Replace the main board or repair the **audio circuitry**. Use the original front panel when you reassemble the radio. Retest the radio and record whether the repair was successful. If the problem is solved go to"Final Tasks" on page 108.

© Tait International Limited June 2023

4.6 Final Tasks

Repair and reassemble the radio as described above, carry out a full and final inspection and test, complete these final tasks in the order shown, and then return the radio to the customer.

Skip any of the final tasks that do not apply or that you have already completed in the course of the repair. For example, if you replaced a board, you have already loaded the programming file and recalibrated the radio.

ⓘ Do not omit the final administration.

Complete this sequence of final tasks for every radio received for servicing:

1. Enable Software Features (SFE).
2. Load the Programming File.
3. Reprogram the Radio Serial Number (if necessary).
4. Reprogram the Electronic Serial Number (MPT trunked mode only) (if necessary).
5. Recalibrate the Radio (if necessary).
6. Perform a Final Inspection.
7. Test the Radio.
8. Complete the Final Administration.

Task 1 — Enable Software Features (SFE)

If you replaced the RF board, ensure that the correct software features, if any, are enabled for the customer. If software features need to be enabled, a special license file is required for the replacement main board. The file must allow for the enabling of the same software features as in the original assembly. Proceed as follows:

1. If it was possible to read the software features in "Obtain the Details of the Software Feature Enabler (SFE)" on page 100, go to Step 2. If it was not possible, go to Step 3.
2. Reading the software features will have revealed if any software features were enabled for the radio under repair. If there were, go to Step 3. If there were none, go to Task 2.
3. Contact your Tait regional office regarding the radio's software features.
4. Supply the serial number of the radio under repair, and the serial number of the replacement main board (located on a label on the main board).
5. If it is known that the radio had software features enabled, go to Step 6. Otherwise go to Step 7.

© Tait International Limited June 2023

6. From your Tait regional office, request a license file for the replacement main board. Go to Step 8.

7. Ask your Tait regional office whether the radio under repair had any software features enabled, and if so, to send a license file for the replacement main board. They will either indicate that the radio had no software features enabled, or supply the required file. If the radio had no software features enabled, go to Task 5. If the required file is supplied, go to Step 8.

8. On receiving the license file, run the programming application on the test computer. On the menu bar click Tools > Optional Features. The Optional Features dialog appears.

9. Use the license file to enable the appropriate software features. The procedure is given in the Help under the heading Activating a feature. Go to Task 2.

Task 2 — Load the Programming File

Perform this task if you reprogrammed the radio for servicing, or replaced the RF board.

1. Connect the radio to the test equipment.

2. Use the relevant programming application to **load the programming file** that you read or set up in "Initial Tasks".

   If you reprogram the radio with a **default programming file**:

   - If the radio will be returned directly to a customer who has no programming facilities, obtain and upload either the original programming file or the data used to create that file.
   - If the radio will be returned to a Tait dealer or distributor, or directly to a customer who has programming facilities, advise them that they will need to reprogram the radio.

Warning **Unexpected radio behavior! How the radio is configured determines how it behaves. If possible, restore all customized settings before returning the radio to the customer. If there are any new settings, test them or urge the customer to test them before the radio user faces a real-life situation. For example, when giving priority to a signal make sure that the radio user will be able to break in (get through) in an emergency.**

© Tait International Limited June 2023

Task 3 — Reprogram the Radio Serial Number

If you replaced the RF board, the electronically stored radio serial number (RSN) is no longer the same as the (original) radio serial number that is marked 'S/N' on the chassis label.

1. Use the programming application to view the Specifications form. Note the new radio serial number.
2. Note the old radio serial number ('S/N') that still appears on the chassis label. See Figure 1.2 on page 23.
3. Supply both numbers to the network provider and explain that they belong to the same radio.

Task 4 — Reprogram the Electronic Serial Number (MPT trunked mode only)

If you replaced the RF board, the electronically stored Electronic Serial Number (ESN) that a trunked radio network uses to identify a trunked radio has changed. The ESN consists of three parts:

Manufacturer's Code + Model Code + Electronic Serial Number

Example:

- Manufacturer's Code: 4
- Model Code: 7
- Electronic Serial Number: 5163

Together these give the radio an ESN of 475163

1. Use the programming application to view the Trunked Networks form. Note the values in the three fields in the ESN panel.
2. Supply the new ESN to the trunked network provider.

Task 5 — Recalibrate the Radio (if necessary)

It is good practice to recalibrate a TDMA radio after servicing (unless you installed a new, pre-calibrated RF board).

- With the radio still connected to the test equipment, use the calibration application to calibrate the radio. Refer to the Help for the calibration application.

Task 6 — Perform a Final Inspection

Carry out a full and final inspection of the radio exterior. See "Perform a Visual Inspection" on page 97. If any mechanical part was damaged during the repair, rectify the damage.

Task 7 — Test the Radio

Test the radio to confirm that it is fully functional.

- If the radio works, go to the next task.
- If the radio does not work, go to Task 8 "Complete the Final Administration" below.

Best practice is to record test results on a separate sheet and to provide the customer with a copy of the sheet as confirmation of the repair.

© Tait International Limited June 2023

Table 4.2 Final tests of general radio functions (analog mode)

Test	Description
PTT switch	Check that PTT switch works.
Microphone	Check operation of microphone. Check operation of hookswitch.
Data communications	Test 1200 baud data transmission (standard).
Direct-connect GPS (global positioning system)	Check that GPS poll returns correct position (if feature is enabled).
Selcall	Check that radio encodes Selcall. Check that radio decodes Selcall.
Audio tap points and digital I/O	Check configuration of programmed options and test operation of these lines to confirm that Customer requirements are satisfied.

Caution To prevent injury or damage during test transmissions, general servicing, and transmitter faultfinding, observe the precautions described in "Observe Transmitter Safety Precautions" on page 37.

© Tait International Limited June 2023

Table 4.3 Final tests of transmitter function (analog mode)

	Test	Limits
Error in transmit frequency		±0.5 ppm
25W radio	Transmit power: • B1 and C0 band – High – Medium – Low – Very low • G1, H5 and H7 bands – High – Medium – Low – Very low	 23.2 W to 29.2 W 11.1 W to 14.0 W 4.6 W to 5.8 W 0.9 W to 1.2 W 23.2 W to 29.2 W 11.1 W to 14.0 W 4.6 W to 5.8 W 0.9 W to 1.2 W
	Transmitter current at high power: • B1 band • C0 band • G1 band • H5 and H7 bands	 < 5.5 A < 4.5 A < 4.0 A < 6.5 A
>25 W radio	Transmit power: • B1 band – High – Medium – Low – Very low • HK, H5 and H7 bands – High – Medium – Low – Very low • K5 band – High (757 MHz to 806 MHz) – High (806 MHz to 870 MHz) – Medium – Low – Very low • L3 band – High – Medium – Low – Very low	 46.3 W to 58.3 W 23.2 W to 29.2 W 13.9 W to 17.5 W 9.3 W to 11.7 W 37.1 W to 46.7 W 18.5 W to 23.3 W 13.9 W to 17.5 W 9.3 W to 11.7 W 26.7 W to 33.7 W 32 W to 38 W 13.4 W to 16.8 W 4.5 W to 5.8 W 1.8 W to 2.2 W 26.7 W to 33.7 W 13.4 W to 16.8 W 4.5 W to 5.8 W 1.8 W to 2.2 W
	Transmitter current at high power: • B1 and band • H5 and H7 bands • K5 band • L3 band	 < 10.5 A < 9.5 A < 7.5 A < 7 A
Peak deviation (sweep tone of 300 Hz to 3 kHz): • Narrow band • Medium band[1] • Wide band[1]		 ≤ 2.5 kHz ≤ 4.0 kHz ≤ 5.0 kHz
Distortion: • 1 kHz at 1.5 kHz deviation (narrow band) • 1 kHz at 3.0 kHz deviation (wide band)		 < 3% < 3%
CTCSS deviation: • Narrow band • Medium band[1] • Wide band[1]		 250 to 350 Hz 500 to 560 Hz 580 to 680 Hz

© Tait International Limited June 2023

1. SFE TMAS083 is required to operate the radio in medium or wide band.

Table 4.4 Final tests of receiver functions (analog mode)

Test	Limits
Receive sensitivity	≤ –118dBm for 12dB SINAD
Mute opening: • Country • City • Hard	 >6dB and <10dB SINAD >8dB and <14dB SINAD >18dB and <22dB SINAD
Audio power (maximum volume at –47dBm): • at Rx Audio/SINAD connector on Test Unit • at pins 3 (SPK–) and 4 (SPK+) of power connector on radio	 >500mV$_{rms}$[1] >5.00V$_{rms}$
Distortion (at –47dBm, 60% rated system deviation at 1kHz, with volume set to give 3W into 16Ω load)	<3.00%

1. The Rx Audio/SINAD output on the test unit has 10dB of attenuation switched in when the test unit PORTABLE/MOBILE switch is set to MOBILE. Refer to "TOPA-SV-024 Test Unit" on page 191 for details.

Task 8 — Complete the Final Administration

If the repair was successful:

1. Enter details of the repair in the faults database.
2. Return the repaired radio to the customer with confirmation of the repair.

If the repair was not successful:

- Send the radio to your regional Tait office. Include the customer details, the reported fault, and a description of the repair action to date. (If you are at a regional Tait office, send the radio and details to the Global Repair Center.)

Regard a repair as 'not successful' if, for example:

- You cannot locate the fault within a reasonable and economic period of time.
- You can locate the fault, but the repair is beyond your current level of training and/or expertise, or you lack the necessary facilities.
- The repair failed.

For more information about the handling of problematic repairs see "Repair Recommendations" on page 29.

© Tait International Limited June 2023

5 Fault Finding of the Graphical Control Head

Overview

This section describes the fault finding of the control head for the following faults:

- power supply faulty (initial check)
- LCD display faulty
- LCD back lighting faulty
- LCD heating faulty
- function key LEDs, status LEDs, or backlighting LEDs faulty
- ON/OFF key faulty
- function, scroll, or selection keys faulty
- speaker faulty
- volume control faulty
- PTT faulty

The faults can be detected by visual inspection (refer to "Checking the User Interface" on page 101) or using the CCTM commands in Table 2.10 on page 67.

General

The following applies for all fault finding procedures:

Notice Do not disconnect or connect the control head while power is supplied to the radio.

- To connect to ground use one of the screw bosses of the metal spaceframe or the screw bosses of the radio body.
- If the radio does not switch on when power is supplied, the radio may be programmed to go into the state it was in when powered down. Connect a known good control head, power up the radio, and change the relevant setting in the programming application. Remember to program the original setting before returning the radio to the customer.
- These fault finding procedures use CCTM commands to test the basic functions of the control head (see "Computer-Controlled Test Mode (CCTM)" on page 64).
- For disassembly and re-assembly instructions, refer to "Disassembling and Reassembling the Control Head" on page 86.
- If the repair fails or the fault could be found, replace the control head board.
- After completing the repair, carry out the tasks in "Servicing Procedures" on page 96.

© Tait International Limited June 2023

5.1 Power Supply Faulty

A 3.3 V regulator (U1) converts the switched 13.8 V supply from the radio body to 3.3 V. A 1.2 V regulator (U203) converts the 3.3 V to 1.2 V, and a 2.5 V regulator (U206) converts the 3.3 V to 2.5 V. A power-sense module (U205) verifies the outputs of the voltage regulators and—in the case of a fault—creates a power reset signal which is processed by the FPGA. If the start-up of the control head fails, the radio body reduces the switched 13.8 V supply shortly after power is supplied.

Figure 5.1 Circuit diagram of the power supply circuitry

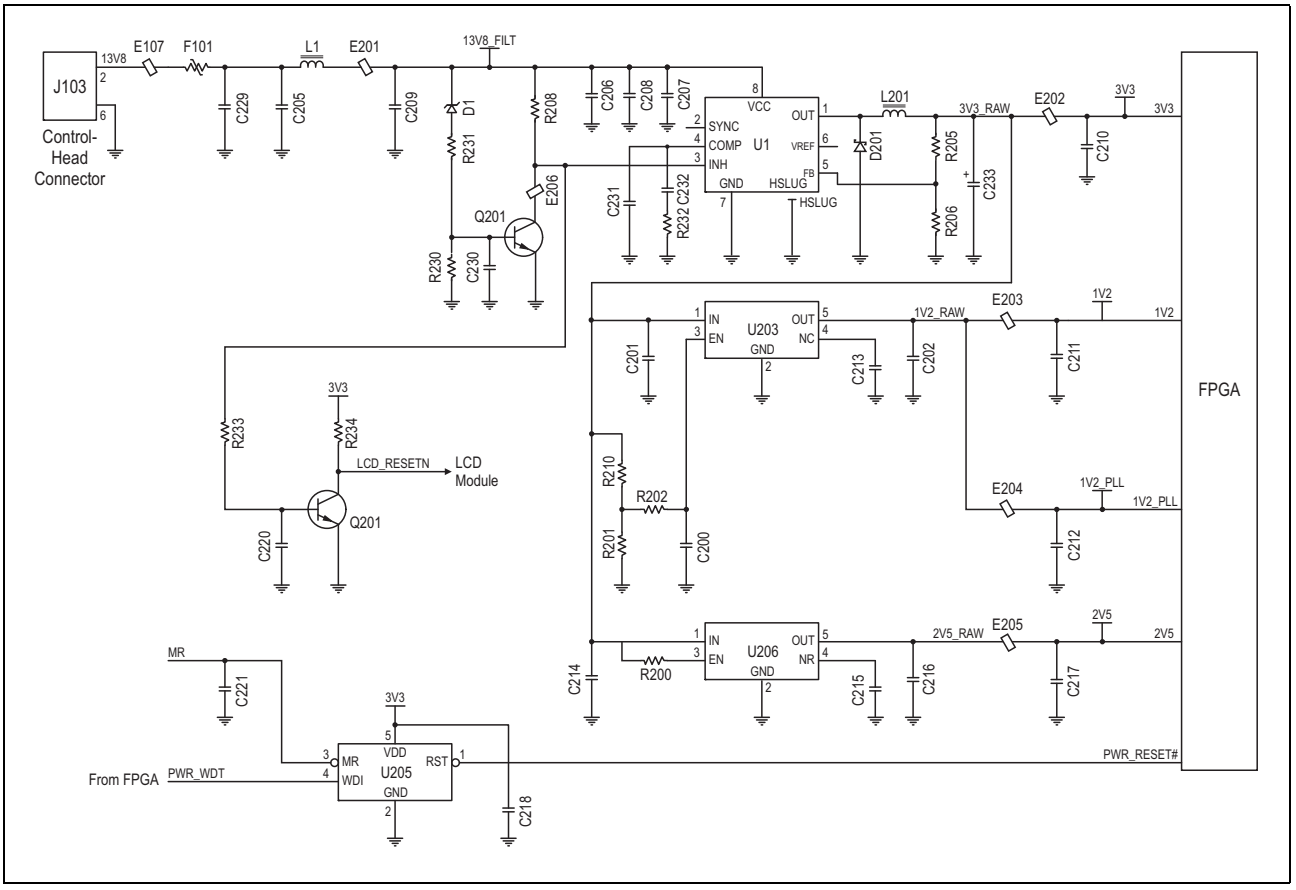

Refer to Figure 5.2 on page 118 for the PCB layout.

For all faults, check that the supply voltages are correct:

1. Check the 3.3 V supply voltage on pin 4 of J105, and C201 or C214.

J105 pin 4: 3.3V C201 or C214: 3.3V

If the signal is correct, continue with Step 5. If it is incorrect, remove shielding can E200 and continue with Step 2.

2. Check the 3.3 V supply voltage between E202 and C210.

E202/C210: 3.3V

If the signal is not correct, visually inspect the components E202, D201, L201, R205, and R206 for open or shorted contacts. Replace if necessary. Continue with Step 3.

3. Check the 13.8 V supply voltage (9.7 V to 17.2 V) between pin 2 of the control head connector J103 and pin 8 of U1.

J103 pin 2: 13.8V (V_s=9.7V…17.2V) U1 pin 8: 13.8V (V_s=9.7V…17.2V)

If the signal is correct, continue with Step 4.

A fault in the control head can cause the radio body to reduce the switched 13.8 V supply shortly after power is supplied. In this case, the control head must be supplied directly through pin 2 of connector J103.

If the signal is not correct, check the 13.8 V supply voltage from the radio body. Return to Step 1.

4. Check the inhibit signal at pin 3 of U1.

U1 pin 3: high: >2.2V, low: < 0.7V D1: V_s – 5.1V

If the signal is above 2.2 V, visually inspect the components D1, R231, R230, R208, and Q201 for open or shorted contacts. Replace if necessary. Return to Step 1.

If the signal is low, replace U1. Return to Step 1.

5. Check the 1.2 V supply voltage at C211 and C212.

C211, C212: 1.2V

If the signal is correct, continue with Step 8.

If the signal is not correct, continue with Step 6.

6. Check the 1.2 V supply voltage at pin 5 of U203.

U203 pin 5: 1.2V

If the signal is correct, continue with Step 7.

If the signal is not correct, replace U203.

7. Check E203 and E204 for continuity.

E203, E204: 1.2V

If E203 and E204 are correct, check the PCB track for open circuits or shorts. Replace the PCB if necessary.

If E203 and E204 are faulty, replace E203 and E204 and return to Step 5.

© Tait International Limited June 2023

8. Check the 2.5 V supply voltage at C217.

C217: 2.5V

If the signal is correct, continue with Step 11.

If the signal is not correct, continue with Step 9.

9. Check the 2.5 V supply voltage at pin 5 of U206.

U206 pin 5: 2.5V

If the signal is correct, continue with Step 10.

If the signal is not correct, replace U206.

10. Check E205 for continuity.

E205: 1.2V

If E205 is correct, check the PCB track for open circuits or shorts. Replace the PCB if necessary.

If E205 is faulty, replace E205 and return to Step 8.

11. U205 detects a possible power failure and generates an output signal on pin 1. Check whether this signal is low.

U205 pin 5: 3.3V U205 pin 1: 3.3V U205 pin 3: 3.3V

If pin 5 and pin 3 measure 3.3 V and pin 1 is low, replace U205.

If pin 5 measures 3.3 V, pin 3 is low and pin 1 is high, replace U205.

© Tait International Limited June 2023

Figure 5.2 PCB layout of the power supply circuitry

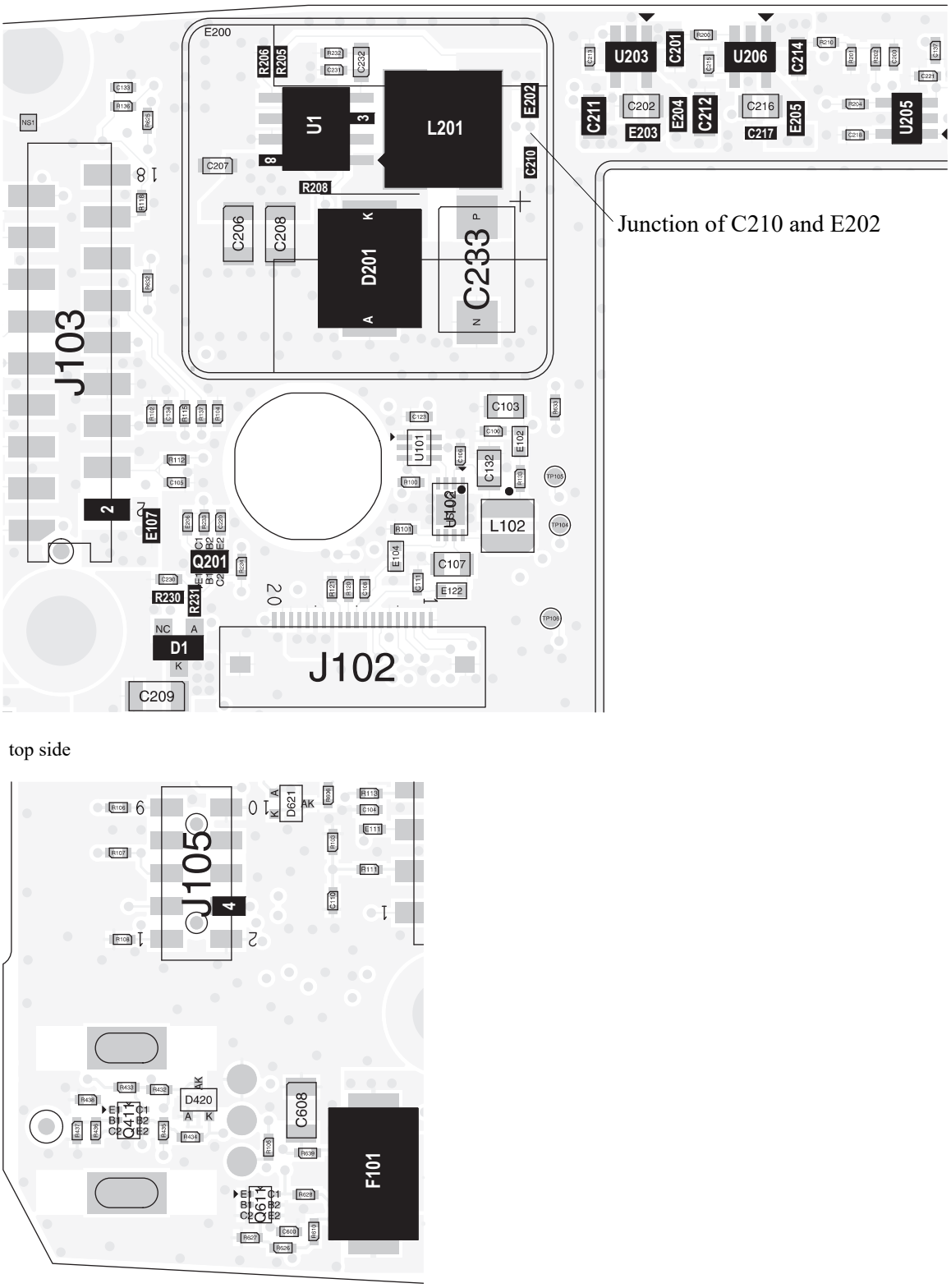

© Tait International Limited June 2023

5.2 LCD Display Faulty

The LCD module is connected to the control head board via the LCD connector. The LCD module display is controlled by a serial data link to the FPGA. A faulty LCD display can be caused by the following:

- a loose or dirty LCD loom connection,
- a faulty LCD, or
- a fault on the control head board

This section only deals with the display of the LCD. For faults of the LCD backlighting, refer to "LCD Backlighting Faulty" on page 122.

Refer to Figure 5.4 on page 121 for the PCB layout.

Figure 5.3 Circuit diagram of the LCD circuitry

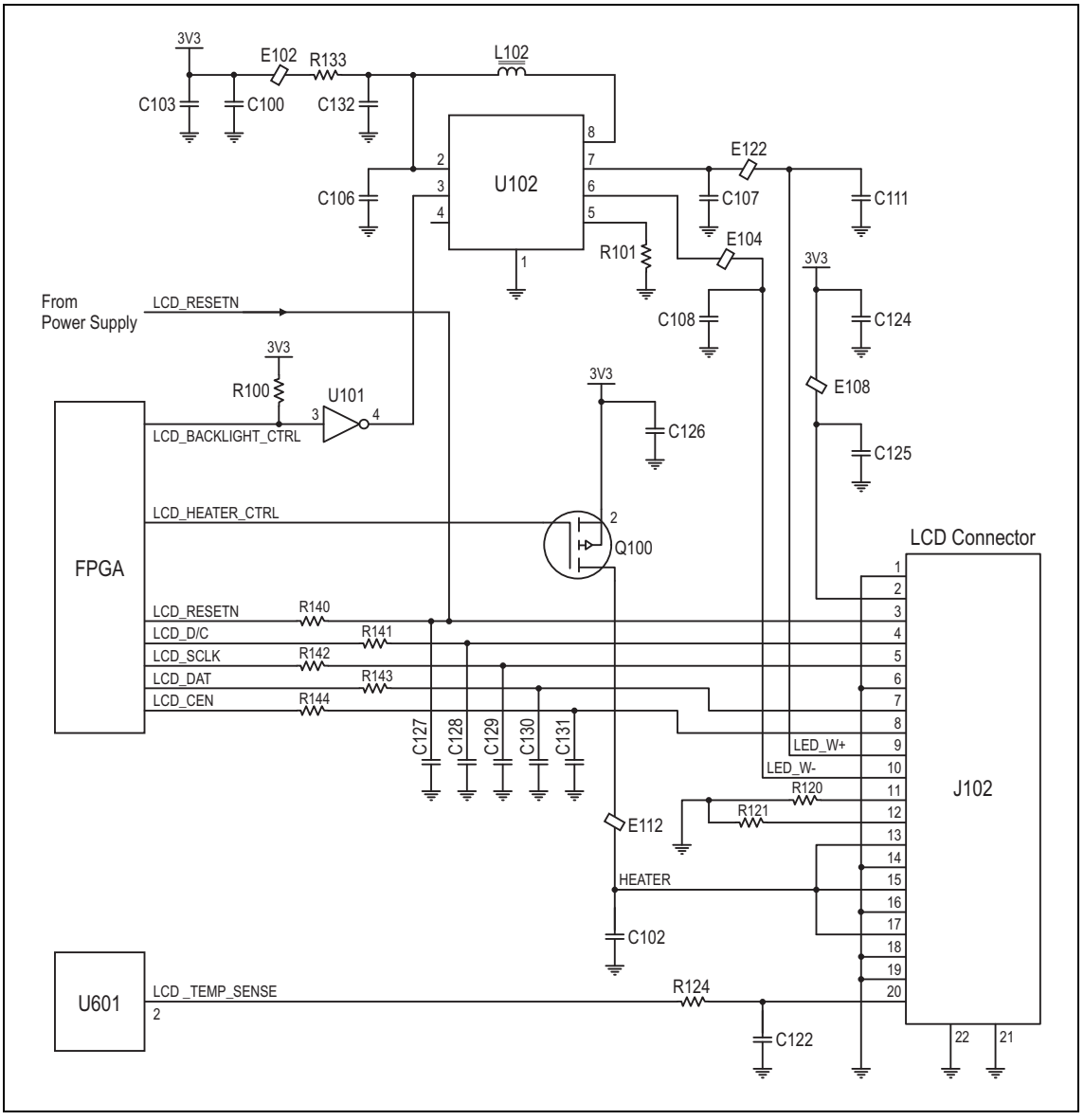

If some of the LCD pixels are faulty (usually complete rows or lines), send CCTM command **1006 1** to activate all LCD pixels. If some of the LCD pixels are faulty, replace the LCD.

If the LCD display is faulty:

1. Disconnect the LCD loom, visually inspect and clean the contacts, and reconnect the LCD loom. Visually inspect connector J102 for open or shorted contacts.

2. Check the 3.3 V supply voltage at pin 2 of the LCD connector J102.

J102 pin 2: 3.3V

   If the signal is not correct, refer to "Power Supply Faulty" on page 115.

For a quick check of the LCD without having to disassemble the control head, connect a good LCD to the control head, or disconnect the LCD loom and connect it to a good control head.

3. Replace the LCD. Carefully remove the protective plastic film from the LCD. Take care not to scratch the soft polarizer material on the top side of the LCD.

4. Use an oscilloscope to check the signals of pins 3, 4, 5, 7 and 8 of connector J102.

J102 pins 3, 4, 5, 7, 8:	The signals should be switching 0 to 3.3V in bursts of 125µs at approximately 1s intervals.

   If any of the signals are missing or distorted, check the signals on the FPGA side of the 100Ω resistors R140 to R144. If necessary, replace the corresponding 100Ω resistor(s) R140 to R144.

© Tait International Limited June 2023

Figure 5.4 PCB layout of the LCD circuitry

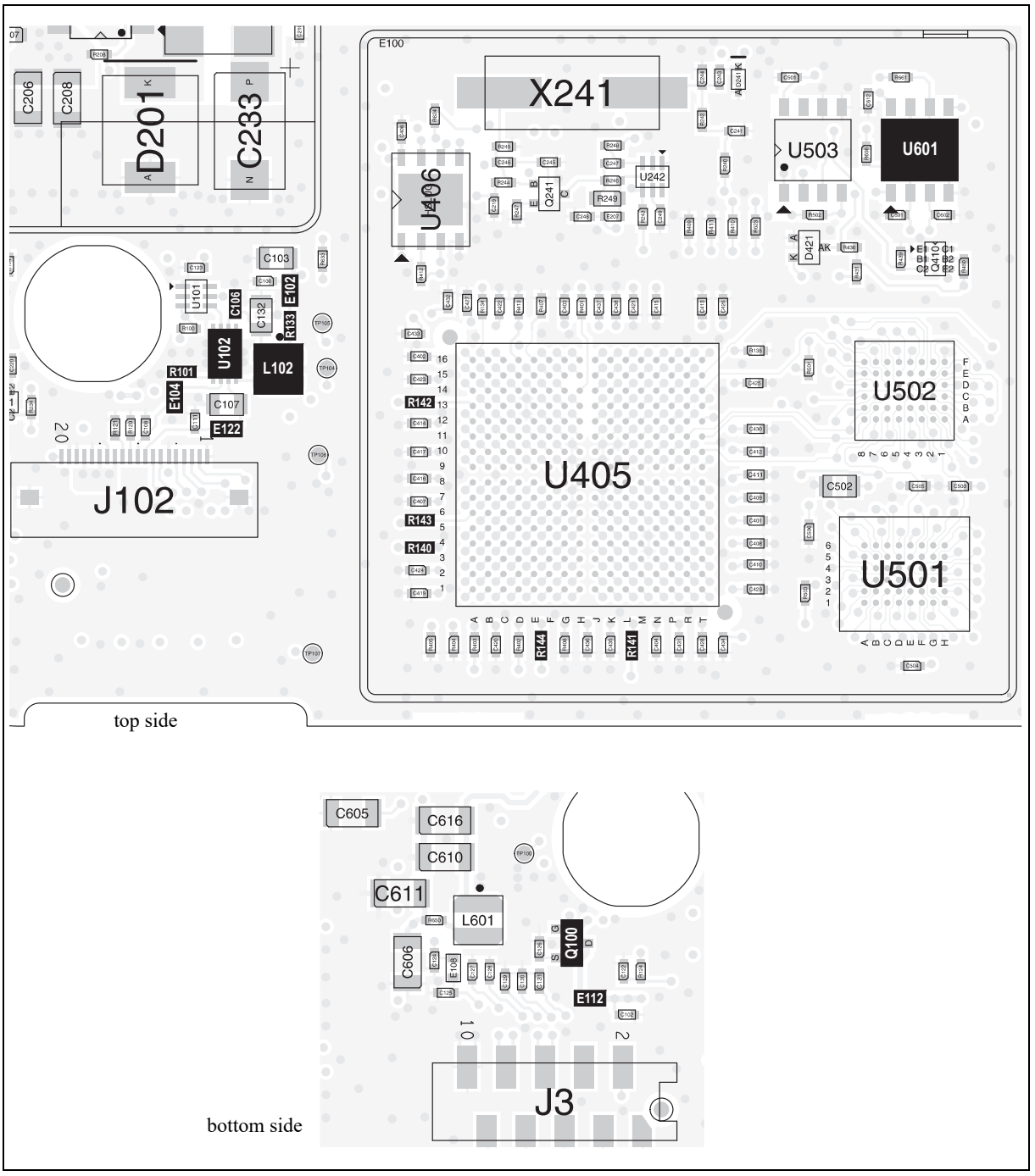

5.3 LCD Backlighting Faulty

The backlighting incorporated in the LCD module is controlled by a data line from the FPGA, which enables backlighting driver U102.

> The LCD backlighting has four brightness settings: off=GND, on=3.3 V, and two intermediate settings which are implemented by pulse-width modulation.

For a circuit diagram and PCB layout, refer to Figure 5.3 on page 119 and Figure 5.4 on page 121.

If the LCD backlighting is faulty:

1. Make sure that LCD backlighting has been enabled in the programming application. Connect a good LCD module to verify this if necessary.

2. Check the 3.3 V supply voltage at pin 2 of U102 or C106.

U102 pin 2/C106: 3.3V

   If the signal is correct, continue with Step 3.

   If the signal is not correct, check R133 and E102 for continuity. Otherwise refer to "Power Supply Faulty" on page 115.

3. Send CCTM command **1004 3** to switch on LCD backlighting.

4. Check the signal at pin 3 of U102.

U102 pin 3: high (with backlighting switched on)

   If the signal is correct, continue with Step 5.

   If the signal is not correct, visually inspect pin 3 for open contact.

5. Check the signals at U101.

U101 pin 5: 3.3V U101 pin 4: high U101 pin 3: low

   If the signals are correct, continue with Step 6.

   If the signals are not correct, replace U101. If the signals are still not correct, the FPGA is faulty and the control head board must be replaced.

6. Check the signal at pin 7 of U102.

U102 pin 7: ≈14V (with backlighting switched on)

   If the signal is correct, continue with Step 7.

   If the signal is not correct, check the continuity of L102. If L102 is OK, replace U102 (or replace the PCB).

© Tait International Limited June 2023

7. Check the signal at pin 5 of U102.

U102 pin 5: 0.2V

If the signal is correct, continue with Step 8.

If the signal is not correct, check that the resistance of R101 is 18Ω. Check the continuity of E122 and E104.

8. Visually inspect whether the contacts of pins 9 and 10 of connector J102 are open or shorted. Check the signal at pins 9 and 10 of connector J102.

J102 pins 9 and 10: ≈14V (with backlighting switched on)

If the signal is correct, replace the LCD.

© Tait International Limited June 2023

5.4 LCD Heating Faulty

The heating incorporated in the LCD module is controlled by a data line from the FPGA, which switches a transistor on MOSFET Q100.
A temperature signal from the LCD module is converted to a digital signal by an analog/digital converter (U601) and processed by the FPGA.

ⓘ The temperature sensor signal is independent from the heating and is also used to control the LCD contrast.

For a circuit diagram and PCB layout, refer to Figure 5.3 on page 119 and Figure 5.4 on page 121.

If the LCD heating is faulty:

1. Check the temperature sensor signal at pin 20 of J102.

J102 pin 20: 1.52V at 30°C, 1.58V at 25°C, 1.64V at 20°C, 1.69V at 15°C

   If the signal is below 0.7V (low) or above 2.5V, (high), the LCD temperature sensor is faulty.

2. Send CCTM command **1007** to read the temperature sensor value.

   If the value does not correspond to the ambient temperature, U601 is faulty.

3. Check the 3.3V supply voltage at the source of Q100.

Q100 source: 3.3V

   If the signal is not correct, refer to "Power Supply Faulty" on page 115.

4. Send CCTM command **1008 1** to switch on the LCD heating.

5. Check the signal at the gate of Q100.

Q100 gate: GND (with heating switched on)

   If the signal is not correct, visually inspect pin 4 for open contact. Otherwise the FPGA is faulty and the control head board must be replaced.

6. Check the signal at the drain of Q100.

Q100 drain: 3.3V (with heating switched on)

   If the signal is missing, replace Q100.

7. Visually inspect pins 13 to 18 of connector J102 for open or shorted contacts.

8. Check the signal at pins 13, 15 and 17 of connector J102.

J102 pins 13, 15 and 17: 3.3V (with heating switched on)

   If the signal is not correct, check the continuity of E112. Otherwise replace the LCD.

© Tait International Limited June 2023

5.5 Function Key LEDs, Status LEDs or Backlighting LEDs Faulty

The function key LEDs (F1 and F4), the red, green and orange status LEDs, and the backlighting LEDs are each controlled by an FPGA signal and a transistor current sink (Q620 to Q631). The brightness level is set by PWM of the FPGA control signals, resulting in four intensity levels (off, low, medium and high).

For a PCB layout, refer to Figure 5.6 on page 128.

Figure 5.5 Circuit diagram of the function key LEDs and status LEDs

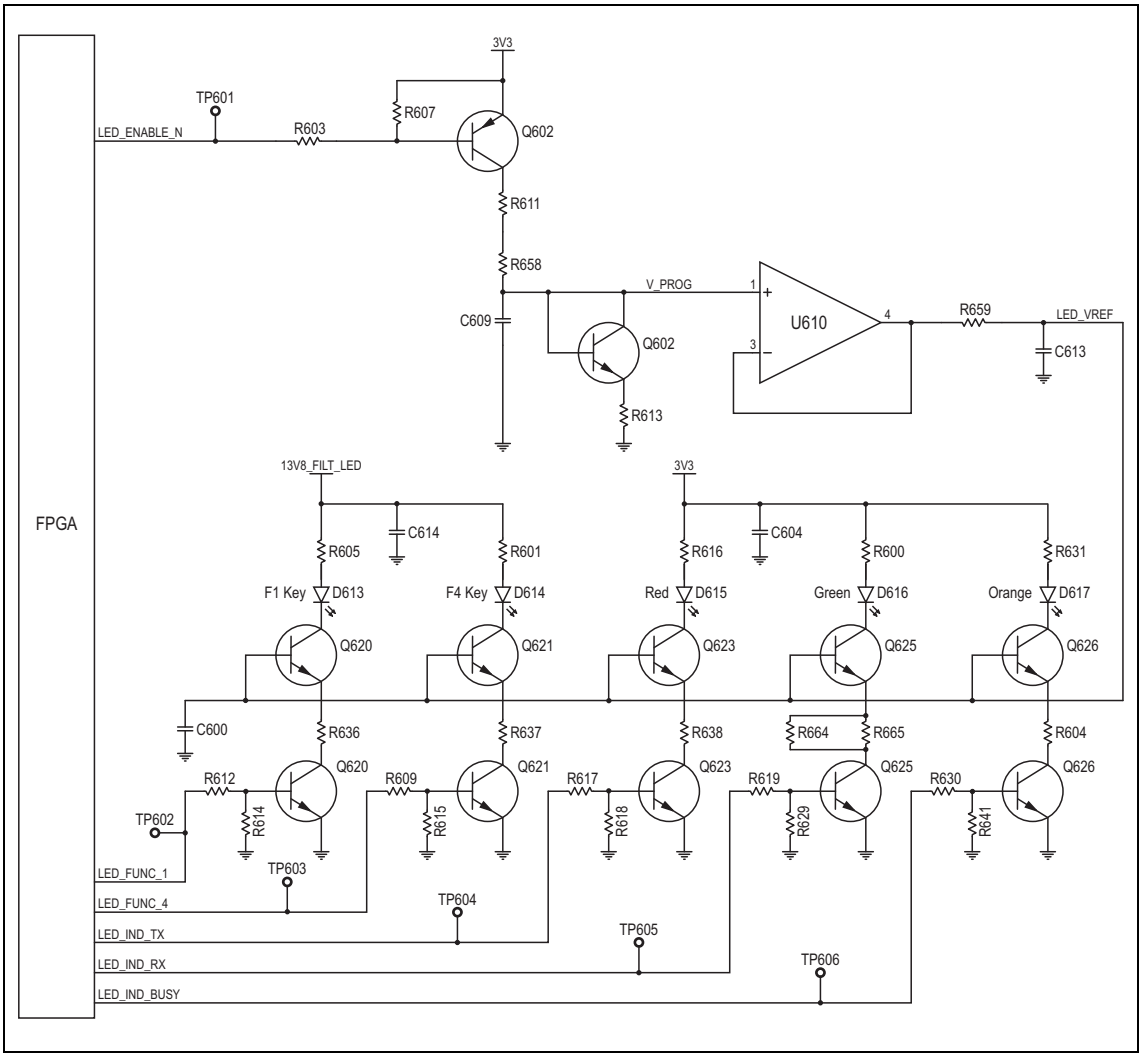

All LEDs Faulty

If none of the function key LEDs, status LEDs or backlighting LEDs work:

1. Send CCTM command **1003 3** to set the backlighting intensity to high.

© Tait International Limited June 2023

2. Check the signal at TP601 (LED_ENABLE_N) with an oscilloscope.

TP601: low (with backlighting switched on high)

If the signal is correct, continue with Step 3.

If the signal is not correct, the FPGA is faulty and the control head board must be replaced.

3. Check the signal at V_PROG (pin 1 of U610).

V_PROG: 0.95V

If the signal is correct, continue with Step 4.

If the signal is not correct, check R611, R658, Q602 (pnp), Q602 (npn) and R613. Replace if necessary. Continue with Step 4.

4. Check that the voltage at pin 4 of U610 (LED_VREF) is the same as the voltage at V_PROG.

U610 pin 4=V_PROG

If the signal is correct, continue with Step 5.

If the signal is not correct, replace U610.

5. Check that the voltage at the junction of R659 and C613 (LED_VREF) is the same as the voltage at pin 4 of U610.

LED_VREF=U610 pin 4

If the signal is correct, but one or two LEDs still do not work, refer to "Status LED or Function LED Faulty" below.

If the signal is not correct, check R659 and replace if necessary.

Status LED or Function LED Faulty

If one of the function key LEDs or status LEDs is faulty:

1. Send CCTM command **1001 x 1** (where **x** is the LED number: 0=F1, 1=F4, 2=orange, 3=green, 4=red) to activate the relevant LED.

2. Send CCTM command **1002 3** to set the LED intensity to high.

3. Check that the corresponding control signal from the FPGA is active.

F1: LED_FUNC_1 high	TP602
F4: LED_FUNC_4 high	TP603
Tx: LED_IND_TX high	TP604
Rx: LED_IND_RX high	TP605
Busy: LED_IND_BUSY high	TP606

If the signal is correct, continue with Step 4.

If the signal is not correct, the FPGA is faulty and the control head board must be replaced.

4. Check the resistors R605, R601, R616, R600 and R631 in the paths of the LEDs.

© Tait International Limited June 2023

5. Check the LED voltages. For the non-operating voltage, use a DMM diode test. For the operating voltage, measure the forward voltage.

	Diode Test	Operating
D613 (F1 LED):	≈3V	2.8V
D614 (F4 LED):	≈3V	2.8V
D615 (red status LED):	≈1.4V	1.8V
D616 (green status LED):	≈1.4V	1.9V
D617 (orange status LED):	≈1.4V	1.8V

If the voltage is incorrect, replace the LED.

6. Replace the corresponding transistor pair.

LED Intensity Faulty

If the intensity of any of the LEDs is faulty:

1. Send CCTM command **1001 x 1** (where **x** is the LED number: 0=F1, 1=F4, 2=orange, 3=green, 4=red) to activate the LED under test.

2. Monitor the signal on TP602 (`LED_FUNC_1`) with an oscilloscope.

3. Use CCTM command **1002** to step through the LED intensity levels from low to high.

LED Intensity	CCTM	Duty Cycle
off	1002 0	0%
low	1002 1	10% (4µs)
medium	1002 2	50% (21µs)
high	1002 3	100%

If the signal is correct, continue with Step 4.

If the signals are incorrect or missing, the FPGA is faulty and the control head board must be replaced.

4. Check the base resistors and replace if necessary.

F1 LED: R612/R614
F4 LED: R609/R615
red status LED: R617/R618
green status LED: R619/R629
orange status LED: R630/R641

5. Use CCTM command **1002 3** to set the LED intensity to high and check that the lower transistor of the pair turns on fully (saturated). Replace the dual transistor if necessary.

6. Check the collector resistors and replace if necessary.

F1 LED: R636
F4 LED: R637
red status LED: R638
green status LED: R664/R665
orange status LED: R604

© Tait International Limited June 2023

Figure 5.6 PCB layout of the function key LED and status LED circuitry

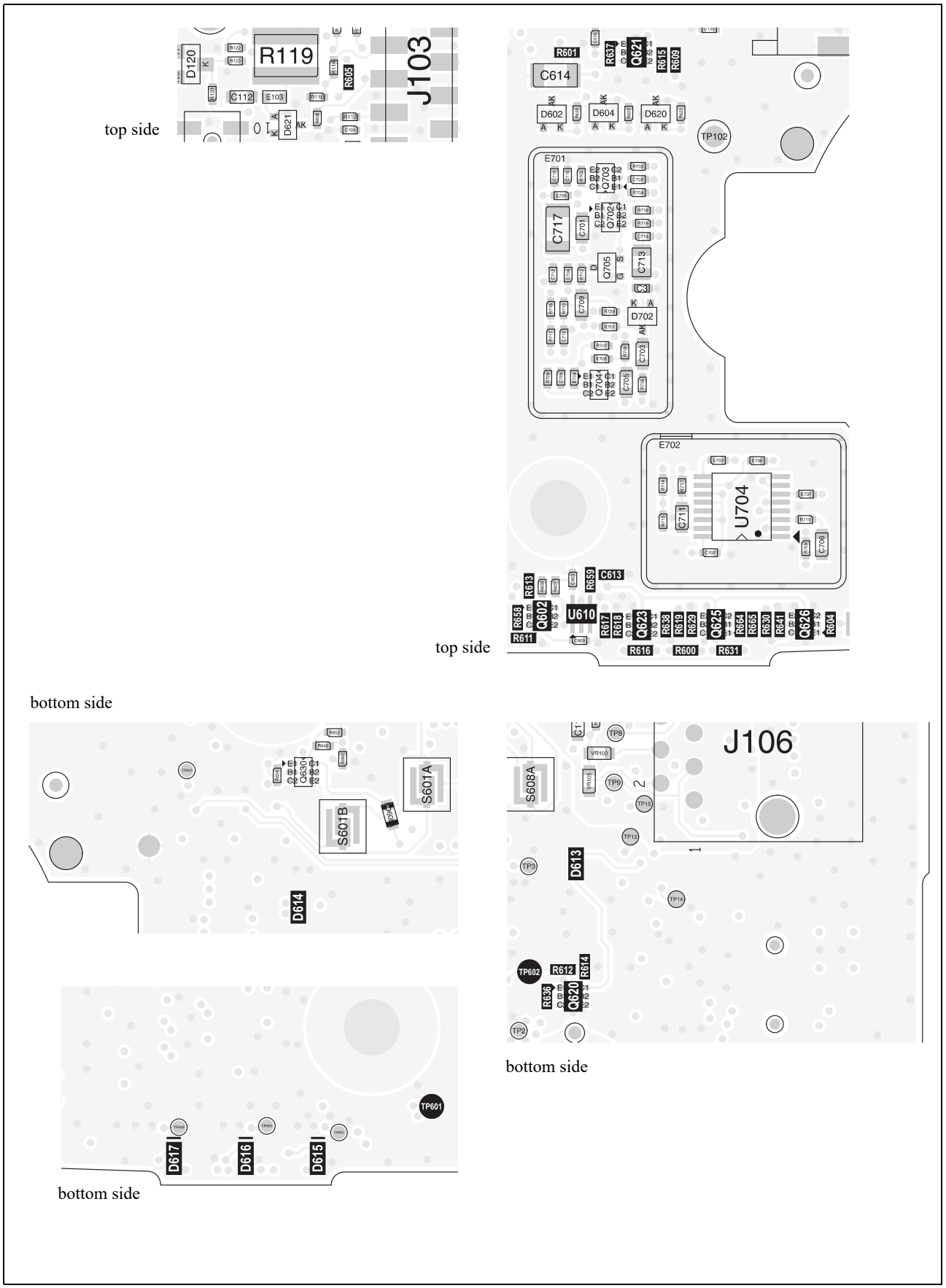

© Tait International Limited June 2023

Figure 5.7 Circuit diagram of the keypad backlighting circuitry

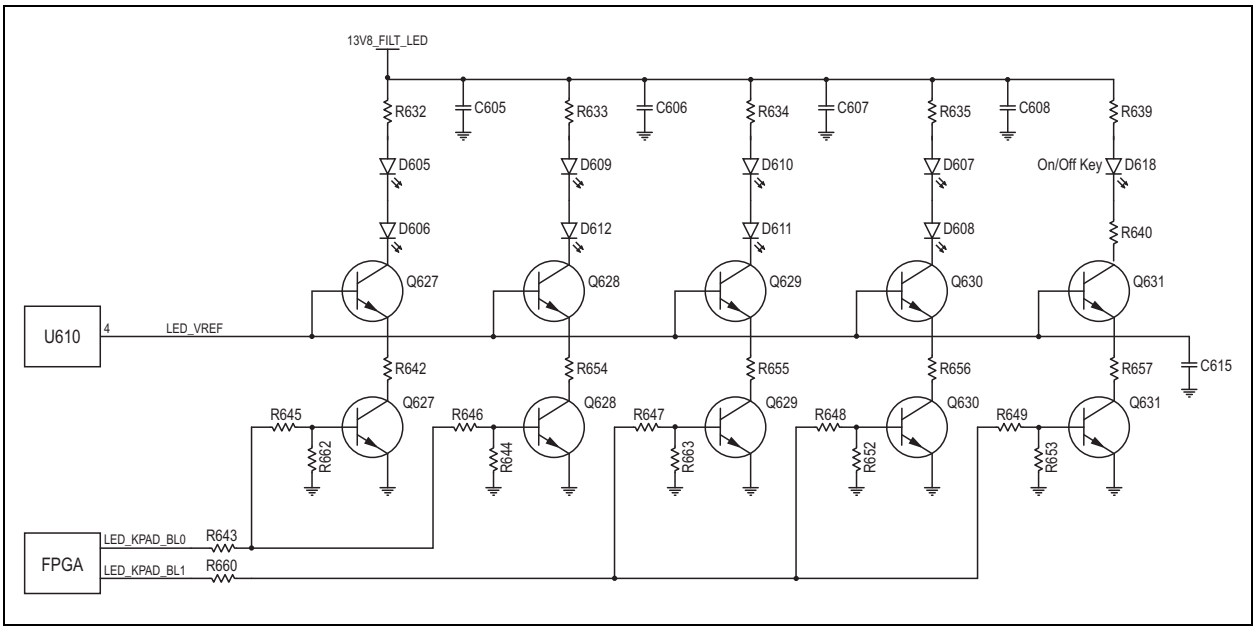

For a PCB layout, refer to Figure 5.8 on page 131.

One LED or One Group of Backlighting LEDs Faulty

If one LED or one group of backlighting LEDs is faulty:

1. Send CCTM command **1003 x** (where **x** is the intensity: 0=off, 1=low, 2=medium, 3=high) to switch on keypad backlighting.

2. Check the 13V8_FILT_LED supply voltage is present across C611.

   If it is not present, check the continuity of L601 and R650. Replace if necessary.

3. Check the control signals from the FPGA.

LED_KPAD_BL0: active (high)	R643
LED_KPAD_BL1: active (high)	R660

   If the signals are correct, check the continuity of R643 and R660.

   If the signals are incorrect or missing, the FPGA is faulty and the control head board must be replaced.

4. From top to bottom for each LED string, check the resistor, the LEDs, and the transistor for continuity.

R632	R633	R634	R635	10Ω	R639	10Ω
D605	D609	D610	D607	2.8V (on)	D618	2.8V (on)
D606	D612	D611	D608	1.8V (on)	R640	120Ω
Q627	Q628	Q629	Q630		Q631	
R642	R654	R655	R656	82Ω	R657	82Ω

LED Intensity Faulty

If the backlighting intensity is faulty:

1. Send CCTM command **1003 x** (where **x** is the intensity: 0=off, 1=low, 2=medium, 3=high) to switch on keypad backlighting.

2. Monitor the signals on LED_KPAD_BL0 (R643) and LED_KPAD_BL1 (R660) with an oscilloscope.

3. Use CCTM command **1003** to step through the LED intensity levels from low to high.

LED Intensity	CCTM	Duty Cycle
off	1003 0	0%
low	1003 1	10% (4 µs)
medium	1003 2	50% (21 µs)
high	1003 3	100%

   If the signal is correct, continue with Step 4.

   If the signals are incorrect or missing, the FPGA is faulty and the control head board must be replaced.

4. Check the base resistors and replace if necessary.

R645/R662
R646/R644
R647/R663
R648/R652
R649/R653

5. Use CCTM command **1003 3** to set the LED intensity to high and check that the lower transistor of the pair turns on fully (saturated). Replace the dual transistor if necessary.

6. Check the collector resistors and replace if necessary.

R642
R654
R655
R656
R657

© Tait International Limited June 2023

Figure 5.8 PCB layout of the keypad backlighting circuitry

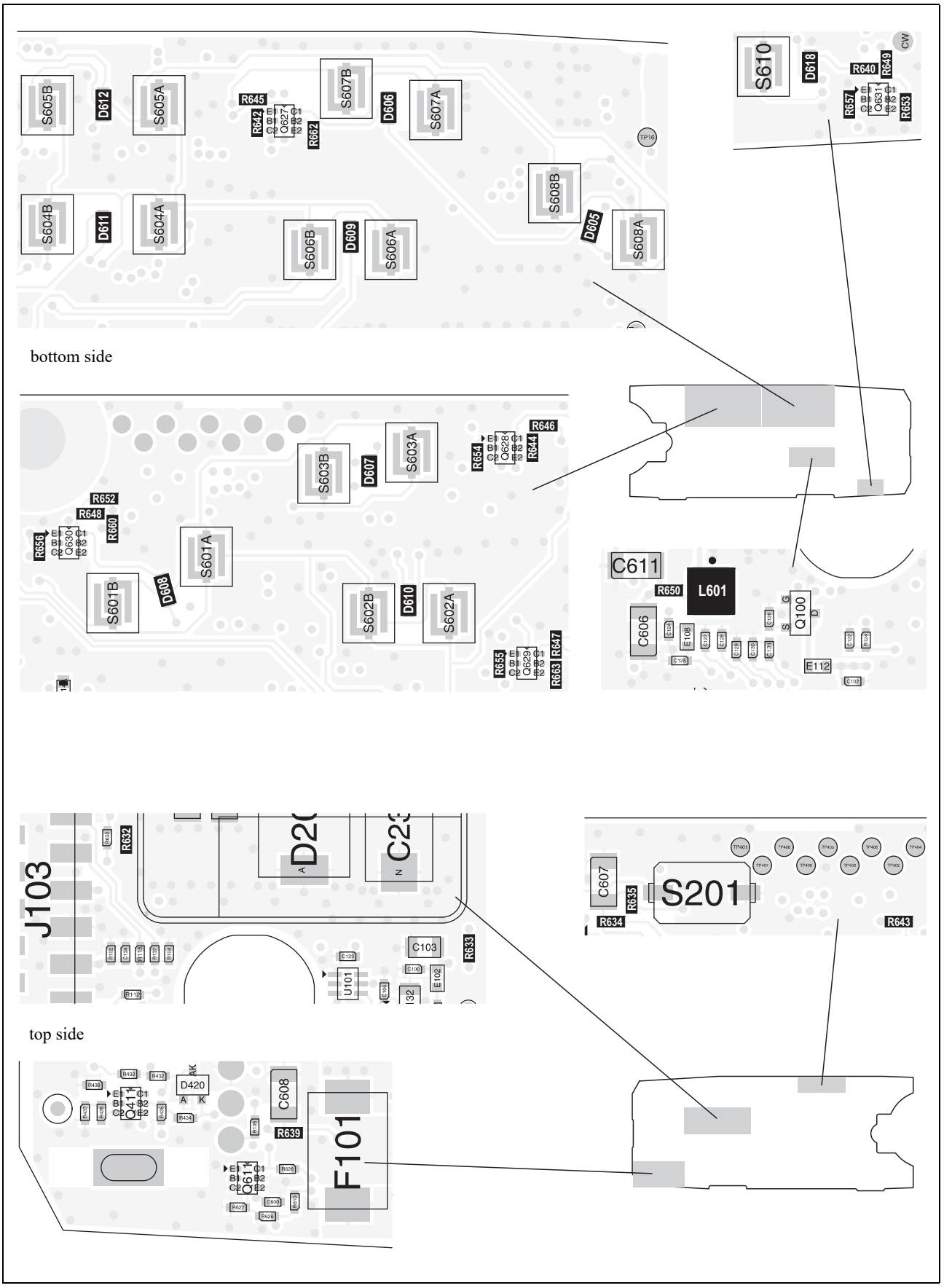

5.6 On/Off Key Faulty

When battery power (13.8V) is applied to the radio, a press of the ON/OFF key will create an active low signal (CH_ON_OFF) back to the radio body to initiate the power-on or power-off sequence. This key-press will also be detected by the FPGA of the control head through Q611 as an active high signal (POWER_ON_OFF_3V3).

Figure 5.9 Circuit diagram of the ON/OFF key

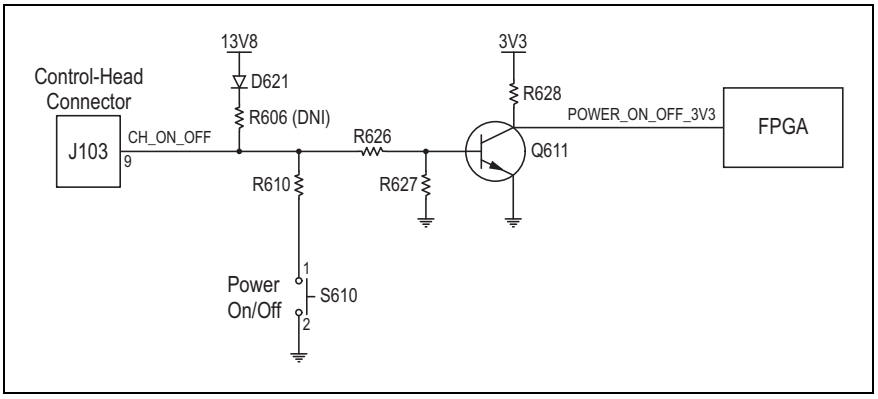

If the ON/OFF key is faulty:

1. Use isopropyl alcohol and a soft lens-cleaning cloth to clean the pads S610 on the control head board for the ON/OFF key.

2. Try a known good ON/OFF key.

3. Check the PWR_ON/OFF signal level from the radio at pin 9 of the control head connector J103.

J103 pin 9: 13V

   If the signal is approximately 13V, continue with Step 6.

   If near or at ground, continue with Step 4.

4. Visually inspect pin 9 of connector J103 for open or shorted contacts.

5. Verify the source of the signal to pin 9 of connector J103 from the radio (without the control head connector).

6. Visually inspect R610 and R627 for short-circuit to adjacent components. Replace if necessary. Return to Step 3.

7. Visually inspect R610 for shorted or open circuits. Repair if necessary. Retest switch.

8. Verify continuity between R610 and switch S610, and continuity between switch S610 and ground.

   If the continuity cannot be restored, replace the control head board.

© Tait International Limited June 2023

Figure 5.10 PCB layout of the power on/off key circuitry

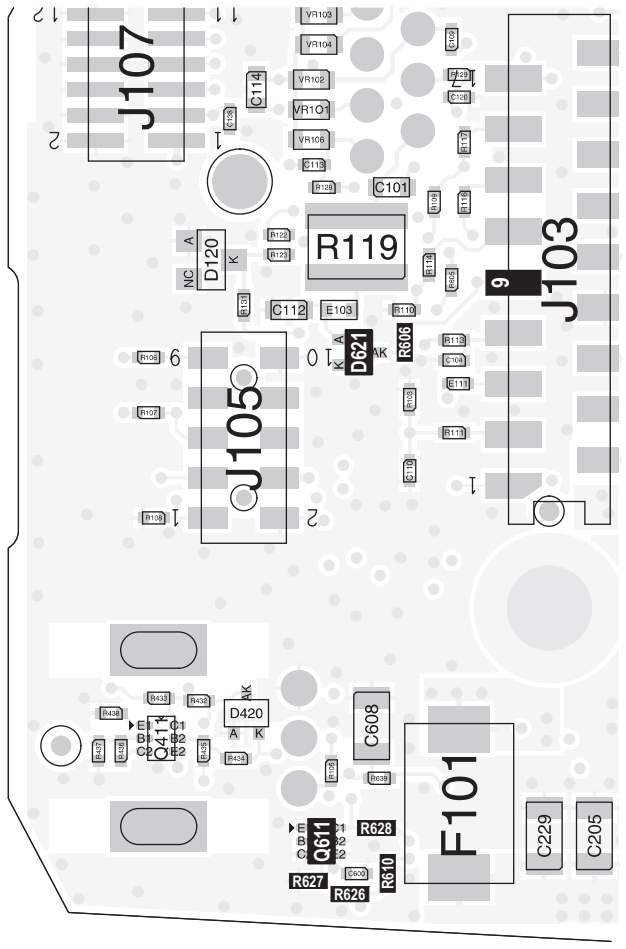

top side

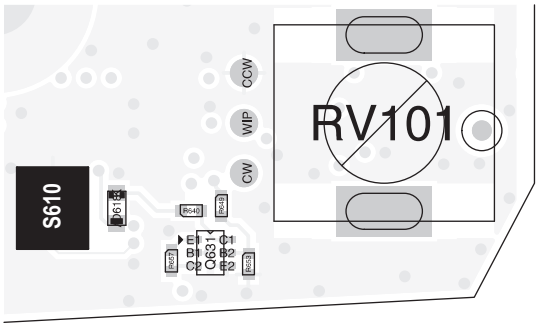

bottom side

5.7 Function, Scroll, or Selection Keys Faulty

The eight keys of the main keypad (function, scroll, and selection keys) are connected to the FPGA by an array of three columns and three rows. During idle operation, the KEY_ROW signals are driven low by the FPGA and the KEY_COL signals (pulled high by an external resistor) are monitored for activity by the FPGA. A key-press will generate a high-to-low transition on the associated column KEY_COL signal. This, in turn, will initiate a sequence of high output levels on the KEY_ROW signals to identify which key was pressed.

Figure 5.11 Circuit diagram of the function, scroll, and selection keys

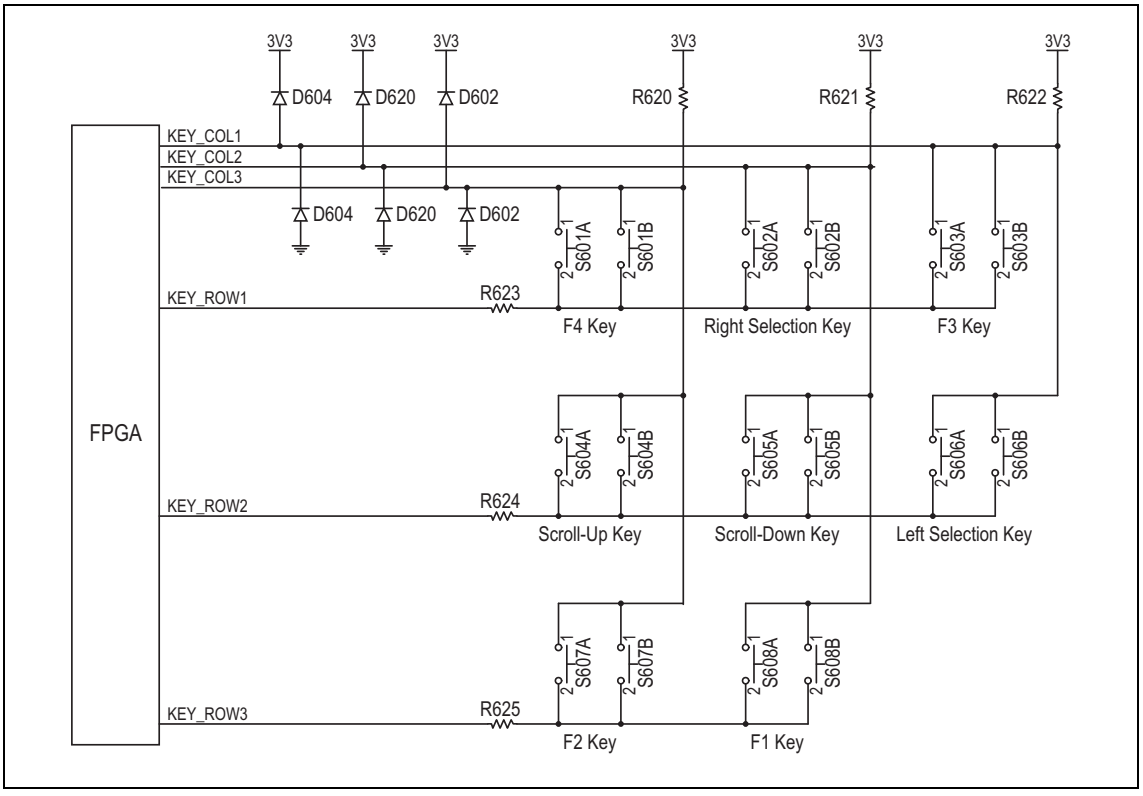

The signal at the column side of the switch should be 3.3 V. The row side of the switch should be GND. A successful press will cause transition on associated KEY_COL signal to low.

CCTM command **1009 1** can be used to monitor keypad press and release events (refer to Table 2.10 on page 67).

One Key Faulty

If an individual key is faulty:

1. Use isopropyl alcohol and a soft lens-cleaning cloth to clean the pad of the PCB switch contacts.
2. Visually inspect both PCB switch contacts (A and B) of a key for short-circuits. Repair if necessary.

© Tait International Limited June 2023

Several Keys Faulty

The keys can be grouped into columns and rows of three or two keys, as illustrated in Figure 5.11.

If one column of keys is faulty:

1. Visually inspect the associated resistor and diodes for open or shorted circuits.

F2 key R620 F4 key D602 scroll-up key	F1 key R621 right selection key D620 scroll-down key	F3 key R622 left selection key D604

If one row of keys is faulty:

2. Visually inspect the associated resistor for open or shorted circuits.

F3 key R623 F4 key right selection key	scroll-up key R624 scroll-down key left selection key	F1 key R625 F2 key

Figure 5.12 PCB layout of the function, scroll, and selection key circuitry

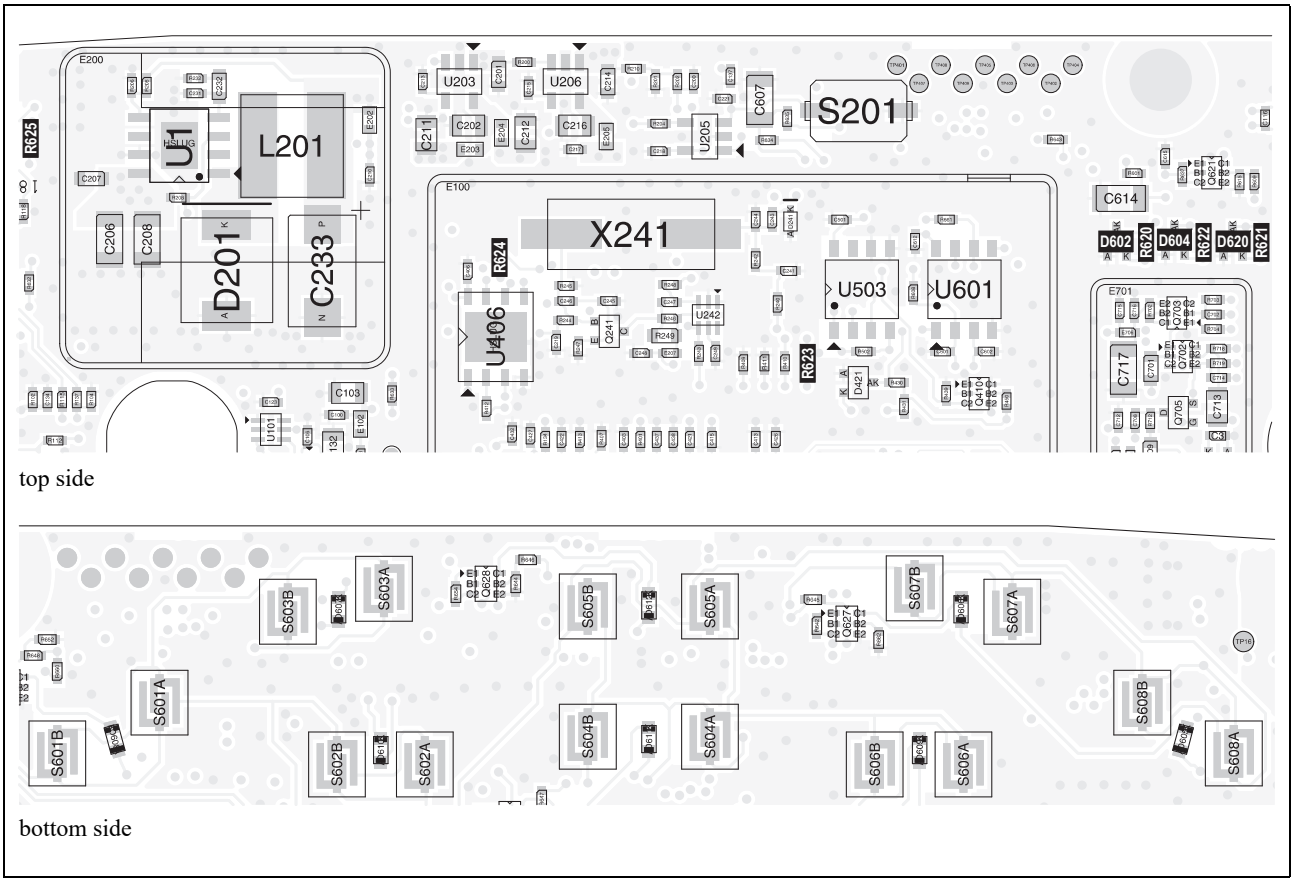

5.8 Speaker Faulty

The two speaker lines (SPK+ and SPK–) are connected to the speaker connector (J104) which is connected to the control head connector (J103) through two ferrite beads (E105 and E106).

Figure 5.13 Circuit diagram of the speaker circuitry

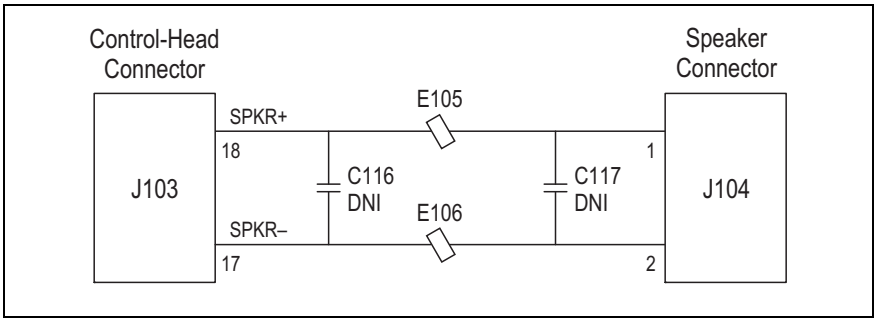

If the speaker functions only intermittently or the audio level is low:

1. Check the continuity from the speaker connector J104 to pin 18 (SPK+) and pin 17 (SPK–) of the control head connector J103.
2. Inspect E105 and E106.
3. Replace the speaker.
4. If there is still a fault, go to "Volume Control Faulty" on page 137.

Figure 5.14 PCB layout of the speaker circuitry

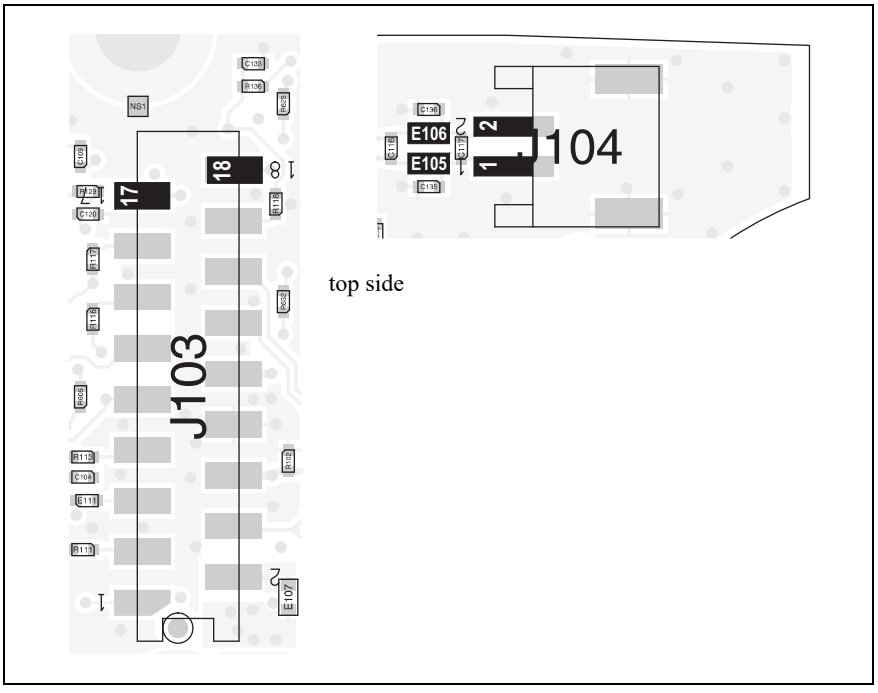

© Tait International Limited June 2023

5.9 Volume Control Faulty

The voltage level of the volume control potentiometer is converted to a digital signal by an analog/digital converter, processed by the FPGA and transmitted to the main board.

ⓘ This section only describes faults to the volume control caused by the control head, which has been established during the initial servicing tasks by means of elimination test.

Figure 5.15 Circuit diagram of the volume control circuitry

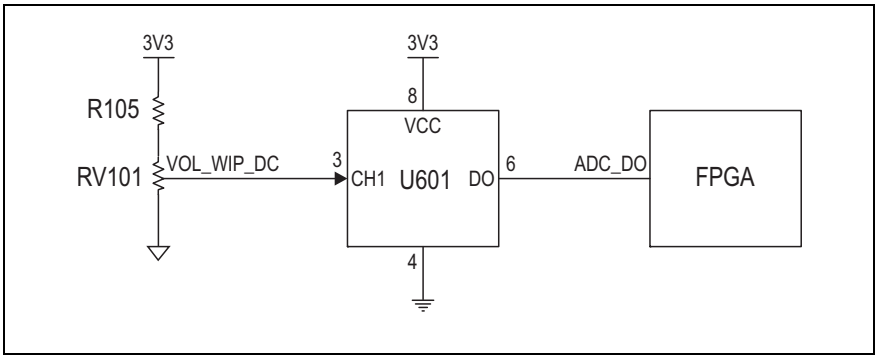

If the volume control works only intermittently, works only at full volume, or does not work at all:

1. Isolate the fault to the control head by using a known good radio body.

2. Check that the voltage between pins CW and WIP of the volume-control potentiometer RV1 varies linearly between about 0 V and 3.3 V.

RV1: 0 to 3.3V

   If the voltage is not correct, replace the potentiometer RV1.

3. Send CCTM command **1010** to read the volume potentiometer.

No volume: reading 0 (1V) Full volume: reading 255 (3.3V)

   If the signal is not correct, remove can E100 and replace the analog/digital converter U601.

   If the signal is correct, go to "Speaker Faulty" on page 136.

© Tait International Limited June 2023

Figure 5.16 PCB layout of the volume control circuitry

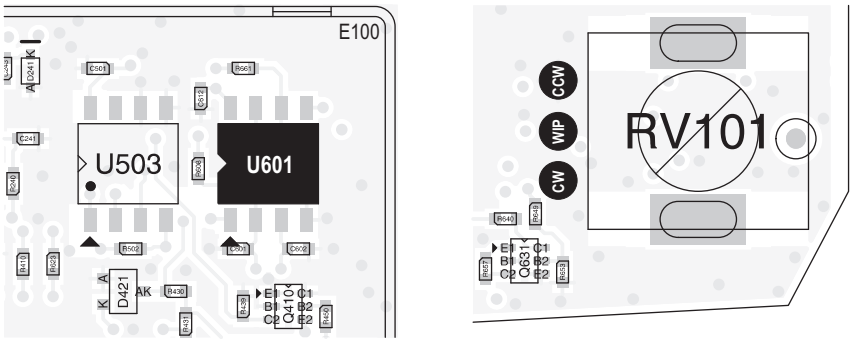

top side bottom side

© Tait International Limited June 2023

5.10 PTT Faulty

The PTT signal from the microphone connector is connected to the FPGA via a resistor (R129) and relayed to the radio as a digital command.

Figure 5.17 Circuit diagram of the PTT circuitry

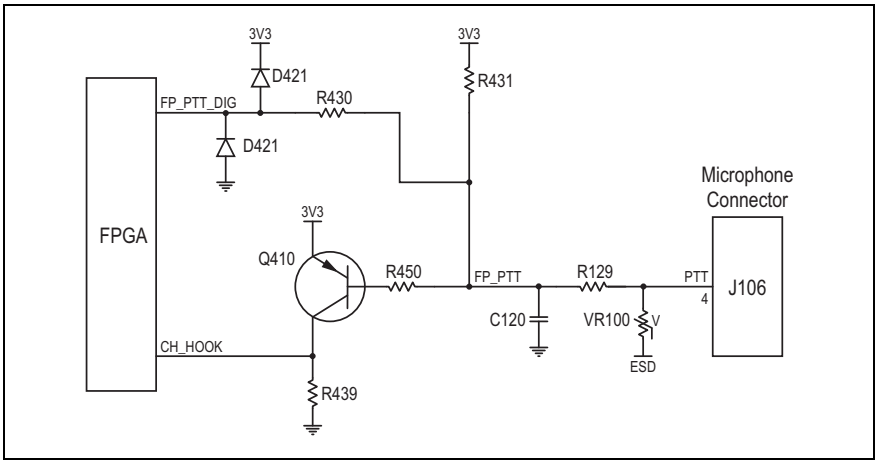

This section only describes faults to the PTT caused by the control head, which has been established during the initial servicing tasks by means of elimination test.

If the PTT is faulty:

1. With no PTT switch and hookswitch operated, check whether pin 4 of J106 is 3 V.

J106 pin 4: 3V

   If the signal is correct, continue with Step 2.

   If the signal is incorrect, inspect R129 and VR100 for open or shorted contacts. Repair if necessary. Repeat Step 1.

2. With the PTT switch operated, check whether the same 3 V are pulled to ground on the other side of R129.

   If the signal is correct, continue with Step 3.

R129: GND

   If the signal is incorrect, inspect the PTT switch in the microphone and J106. Repair if necessary.

3. Verify continuity between pin 4 of J106, the sensing circuitry, and the FPGA. Check the continuity of R129. Check R431 pullup resistor. Check the continuity of R430. Check D421 for short-circuits. Replace if necessary. Repair the PCB track if possible.

© Tait International Limited June 2023

If the hookswitch is faulty:

1. Carry out the tests for a faulty PTT, as described above.

2. Check Q410, R450 and R439.

Figure 5.18 PCB layout of PTT circuitry

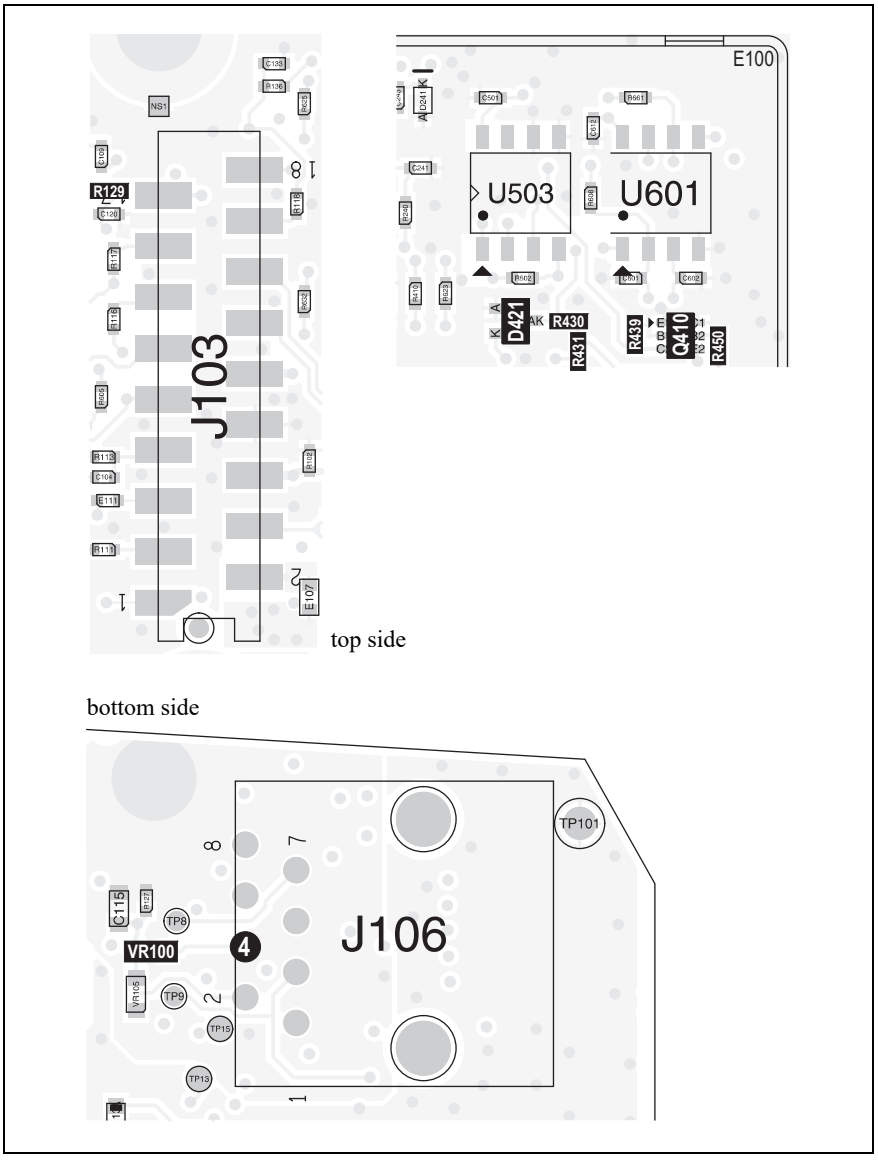

© Tait International Limited June 2023

6 Fault Finding of the 2- or 3-Digit Control Head

Overview

This section describes the fault finding of the 2- or 3-digit control head for the following faults:

- display faulty but not LEDs
- some LEDs faulty
- all LEDs faulty
- display and all LEDs faulty
- some but not all keys faulty
- all keys faulty
- speaker faulty
- volume control faulty

The faults can be detected by visual inspection (refer to "Checking the User Interface" on page 101).

General

The following applies for all fault finding procedures:

Notice Do not disconnect or connect the control head while power is supplied to the radio.

- If the radio does not switch on when power is supplied, the radio may be programmed to go into the status it was in when powered down. Connect a known good control head, power up the radio, and change the relevant setting in the programming application. Remember to program the original setting before returning the radio to the customer.
- For disassembly and re-assembly instructions, refer to "Disassembling and Reassembling the Control Head" on page 86.
- If the repair fails or no fault could be found, replace the control-head board.
- After completing the repair, carry out the tasks in "Initial Tasks" on page 96.

© Tait International Limited June 2023

Figure 6.1 Top side of the 2- or 3-digit control-head board

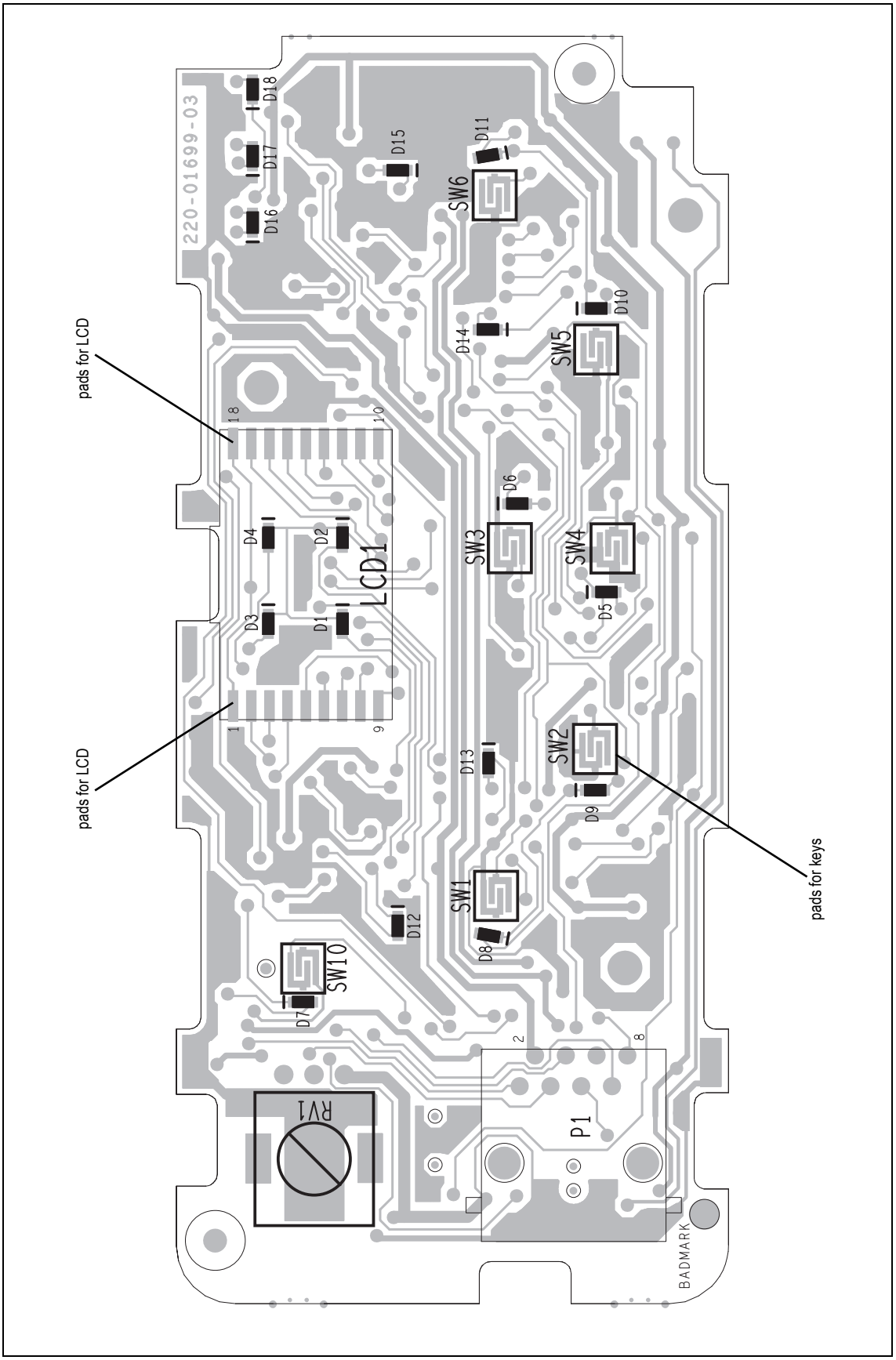

© Tait International Limited June 2023

Figure 6.2 Bottom side of the 2- or 3-digit control-head board

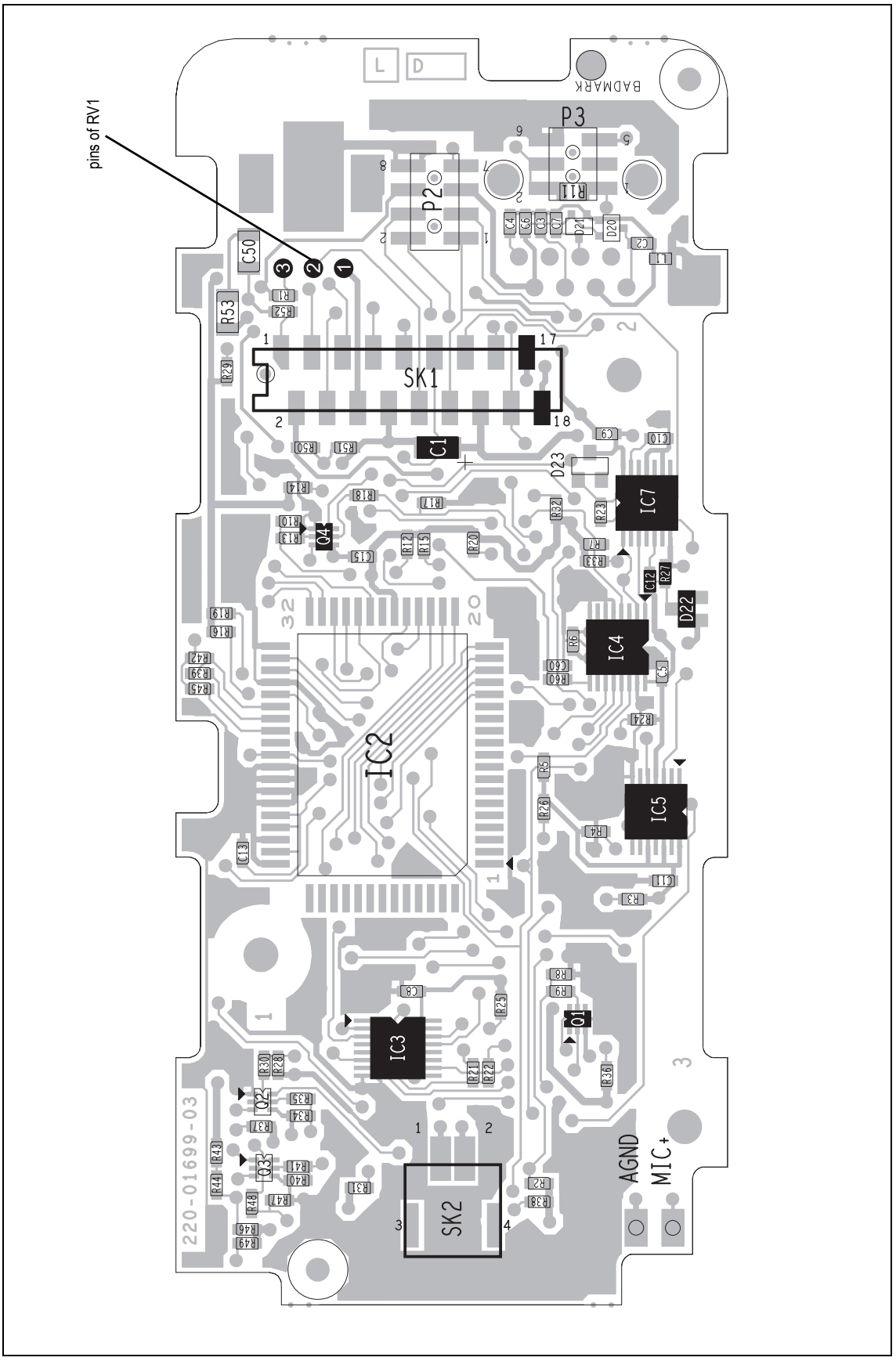

6.1 Display Faulty but not LEDs

Elastomeric Strips Faulty

If all the LEDs function correctly but the display functions only partially or not at all, first check the elastomeric strips:

1. Disconnect the control-head loom from the control head. Remove the control-head board.
2. Remove the elastomeric strips and check the conductors in the strips for continuity. Replace the strips if they are faulty.
3. Ensure that the conductors along the edges of the strips are clean. Use isopropyl alcohol and a soft lens-cleaning cloth to clean the edges.
4. Use isopropyl alcohol and a soft lens-cleaning cloth to clean the pads for the LCD on the control-head board.
5. Insert the elastomeric strips in their slots in the space frame.
6. Re-assemble the control-head board.
7. Reconnect the control-head loom to the control head and test the user interface. If the fault has been removed, return to "Initial Tasks" on page 96. If it has not, replace the LCD as follows.

LCD Faulty

If the elastomeric strips are not the cause of the fault, replace the LCD:

1. Disconnect the control-head loom. Remove the control-head board and disassemble the control head.
2. Remove the LCD.
3. Use isopropyl alcohol and a soft lens-cleaning cloth to clean the electrical contact points on the spare LCD. Carefully remove the protective plastic film from the LCD. Take care not to scratch the soft polariser material on both sides of the LCD.
4. Re-assemble the control head.
5. Reconnect the control-head loom and test the user interface. If the fault has been removed, return to "Initial Tasks" on page 96. If it has not, go to the following task.

Control-Head Board Faulty

If neither the elastomeric strips nor the LCD are faulty, check the relevant components on the control-head board:

1. Use an oscilloscope to display the signal at pin 5 of IC5 (see Figure 6.2). The signal should be a square wave with a frequency of about 60 Hz and an amplitude that alternates between 0.0 and 3.3 V. If the signal is correct, go to Step 3. If it is not, go to Step 2.

© Tait International Limited June 2023

2. Replace IC2 (see Figure 6.2). Test the user interface. If the fault has been removed, return to "Initial Tasks" on page 96. If it has not, go to Step 3.

3. Use the oscilloscope to display the signal at pin 12 of IC7 (see Figure 6.2). The signal should be a square wave with a frequency of about 120 Hz and an amplitude that alternates between 0.0 and 3.3 V. If the signal is correct, replace IC5 and go to Step 4. If it is not, replace IC7 and go to Step 4.

4. Test the user interface. If the fault has been removed, return to "Initial Tasks" on page 96. If it has not, the repair failed; replace the control-head board.

6.2 Some LEDs Faulty

If the display functions correctly but one or more (but not all) of the LEDs D1 to D18 are faulty:

1. Disconnect the control-head loom. Remove the control-head board. Reconnect the loom to the board.

2. Use a multimeter to measure the forward voltage across each faulty LED. See Figure 6.1. The voltage should be 2.0±0.4 V DC. If it is, go to Step 3. If it is not, replace the LED and go to Step 4.

3. If the forward voltage is correct, the LED is functional but the associated switching transistor is suspect. Replace the transistor corresponding to the LED in question. The switching transistors associated with the LEDs D1 to D18 are Q1 to Q4. See Figure 6.2. Continue with Step 4.

4. Test the user interface. If the fault has been removed, re-assemble the control-head board, and return to "Initial Tasks" on page 96. If it has not, replace the control-head board and return to "Initial Tasks" on page 96.

© Tait International Limited June 2023

6.3 All LEDs Faulty

If the display functions correctly but all the LEDs are faulty:

1. Disconnect the control-head loom.
2. Replace IC3 which drives the switching transistors for the LEDs. See Figure 6.2.
3. Reconnect the loom and test the user interface. If the fault has been removed, return to "Initial Tasks" on page 96. If it has not, replace the control-head board and return to "Initial Tasks" on page 96.

6.4 Display and All LEDs Faulty

If the display and all LEDs are faulty:

1. Use a multimeter to measure the 3.3 V DC supply voltage across C1 (see Figure 6.2). If it is correct, go to Step 3. If it is not, go to Step 2.
2. Check for shorts to ground of the 3.3 V supply. Repair any fault and go to Step 8.
3. Use the multimeter to check that the RST line at pin 6 of IC7 is high. The level should be 3.3 V. If it is, go to Step 5. If it is not, go to Step 4.
4. Check for continuity in the LCD driver circuitry D22, C12 and R27 (see Figure 6.2). Repair any fault and go to Step 8. If there is no continuity fault, replace IC7 and go to Step 8.
5. Use the multimeter to check that the OE line at pin 8 of IC5 is low. The level should be less than 0.6 V. If it is, replace IC7 and go to Step 8. If it is not, go to Step 6.
6. Check that the voltage at pins 4, 10 and 14 of IC5 is 3.3 V DC. Also check that pin 7 of IC5 is at ground. If the voltages are correct, replace IC7 and go to Step 8. If they are not, go to Step 7.
7. Check for continuity between IC5 and the control-head connector SK1. Also check for shorts to ground between IC5 and SK1. Repair any fault and go to Step 8.
8. Confirm the removal of the fault. If the fault has been removed, return to "Initial Tasks" on page 96. If it has not, replace the control-head board and return to "Initial Tasks" on page 96.

© Tait International Limited June 2023

6.5 Some but not All Keys Faulty

If one or more (but not all) of the keys are faulty, repair the control head as follows:

1. Disconnect the control-head loom and remove the control-head board.
2. Use isopropyl alcohol and a soft lens-cleaning cloth to clean the pads on the control-head board for those keys that are faulty.
3. Re-install the control-head board.
4. Reconnect the control-head loom and test the keys. If the fault has been removed, return to "Initial Tasks" on page 96. If it has not, go to Step 5.
5. Replace the keypad.
6. Re-assemble the control head. Reconnect the control-head loom, test the keys to confirm the removal of the fault, and return to "Initial Tasks" on page 96.

6.6 All Keys Faulty

If all the keys, with the exception of the ON/OFF key, are faulty:

1. Disconnect the control-head loom. Replace IC4, which reads the status of the keys. See Figure 6.2.
2. Reconnect the control-head loom and test the keys to confirm the removal of the fault. If the fault has been removed, return to "Initial Tasks" on page 96. If it has not, replace the control-head board and return to "Initial Tasks" on page 96.

© Tait International Limited June 2023

6.7 Speaker Faulty

If the speaker functions only intermittently or the audio level is low:

1. Replace the speaker.
2. Check the continuity from the speaker connector SK2 to pin 17 (SPK–) and pin 18 (SPK+) of the control-head connector SK1 (see Figure 6.2). If there is no fault, go to Step 3. If there is still a fault, go to "Volume Control Faulty".
3. Reconnect the control-head loom, test the speaker to confirm the removal of the fault, and return to "Initial Tasks" on page 96.

6.8 Volume Control Faulty

If the volume control works only intermittently, works only at full volume, or does not work at all:

1. Disconnect the control-head loom.
2. Check that the resistance between pins 1 and 2 of the volume-control potentiometer RV1 varies linearly between about 0Ω and 10kΩ. (see Figure 6.2). If it does, go to Step 3. If it does not, go to Step 6.
3. Replace the speaker.
4. Re-assemble the control head. Reconnect the control-head loom. Confirm the removal of the fault, and return to "Initial Tasks" on page 96.
5. Remove the control-head board.
6. Replace the potentiometer RV1. See Figure 6.1.
7. Re-assemble the control-head board. Reconnect the control-head loom. Confirm the removal of the fault, and return to "Initial Tasks" on page 96.

© Tait International Limited June 2023

7 Fault Finding of the Hand-Held Control Head

Overview

This section describes the fault finding of the hand-held control head for the following faults:

- power supply faulty (initial check)
- LCD display faulty
- LCD backlighting faulty
- status LEDs faulty
- keypad and LCD backlighting faulty
- ON/OFF key faulty
- PTT faulty
- keys faulty
- microphone faulty
- communications faulty.

The faults can be detected by visual inspection (refer to "Checking the User Interface" on page 101) or using the CCTM commands in Table 2.11 on page 69.

General

The following applies for all fault finding procedures:

Notice Do not disconnect or connect the hand-held control head while power is supplied to the radio.

- To connect to ground, use a ground test point (e.g. TP117, TP118) or the screw bosses of the radio body.
- If the radio does not switch on when power is supplied, the radio may be programmed to go into the status it was in when powered down. Connect a known good hand-held control head, power up the radio, and change the relevant setting in the programming application. Remember to program the original setting before returning the radio to the customer.
- For disassembly and re-assembly instructions, refer to "Disassembling and Reassembling the Control Head" on page 86.
- If the repair fails or no fault could be found, replace either the main board or the UI board in the hand-held control head.
- After completing the repair, carry out the tasks in "Initial Tasks" on page 96.
- Unless otherwise stated, all illustrations in this chapter refer to the main board.

© Tait International Limited June 2023

7.1 Power Supply Faulty

The switched 13.8 V supply from the radio body is converted to 8 V by regulator U204 and to 3.3 V by regulator U201. A 1.2 V regulator (U205) and 2.5 V regulator (U206) convert the 3.3 V to the FPGA supply voltages. A power-supervision module (U203) verifies the output of the 3.3 V voltage regulator and, in the case of a fault, creates a power reset signal which is processed by the FPGA. If the start-up of the hand-held control head fails, the radio body cuts the switched 13.8 V supply shortly after power is supplied.

Notice It is possible that a hand-held control head appears dead yet all the power supply levels are correct. Pay close attention to the status LEDs at startup (application of power to the unit). If they flash once and then the unit seems dead, suspect a communications error and proceed to "Communications Faulty" on page 176.

© Tait International Limited June 2023

Figure 7.1 Circuit diagram of the power supply circuitry

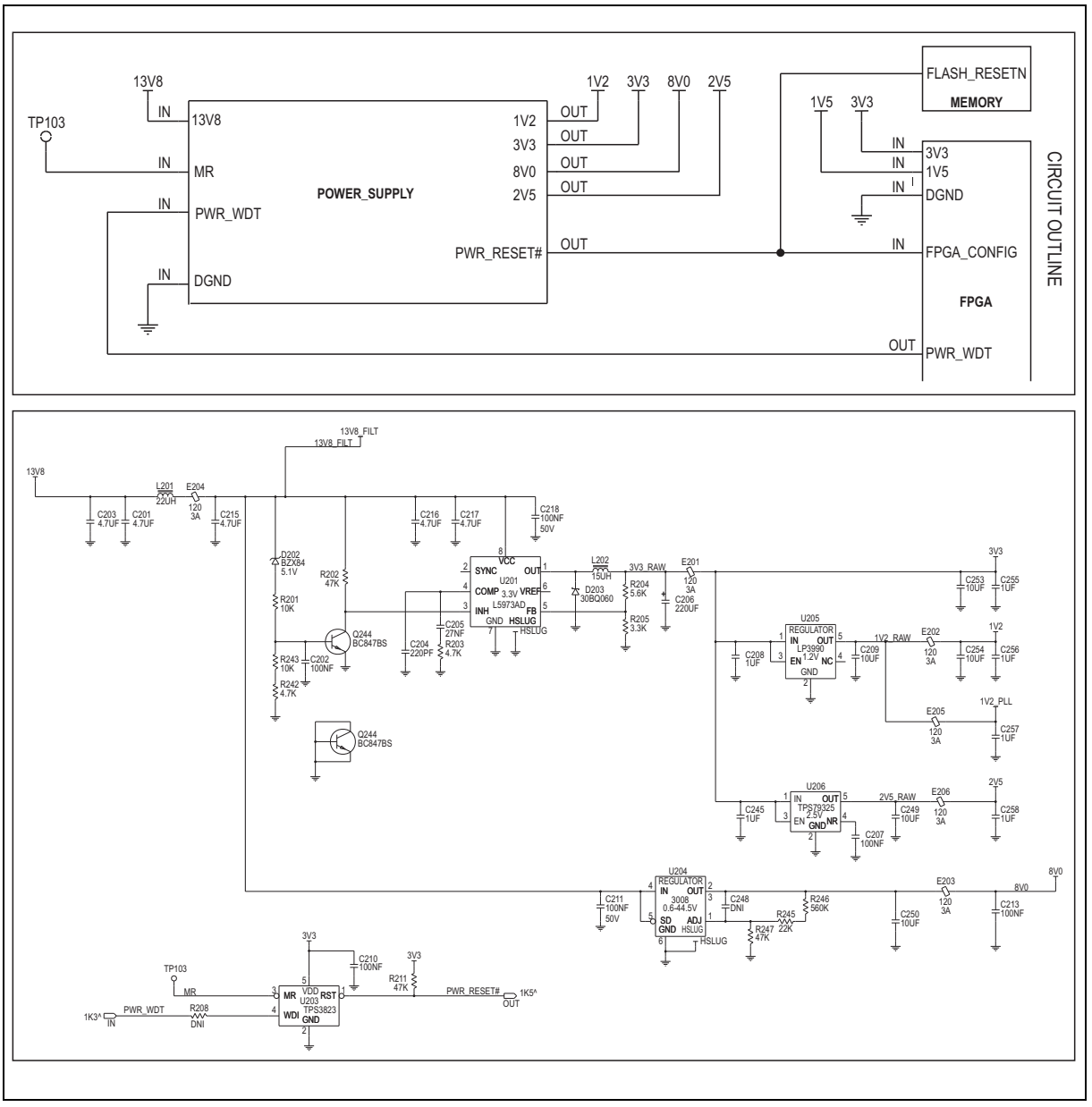

Figure 7.2 PCB layout of the power supply circuitry

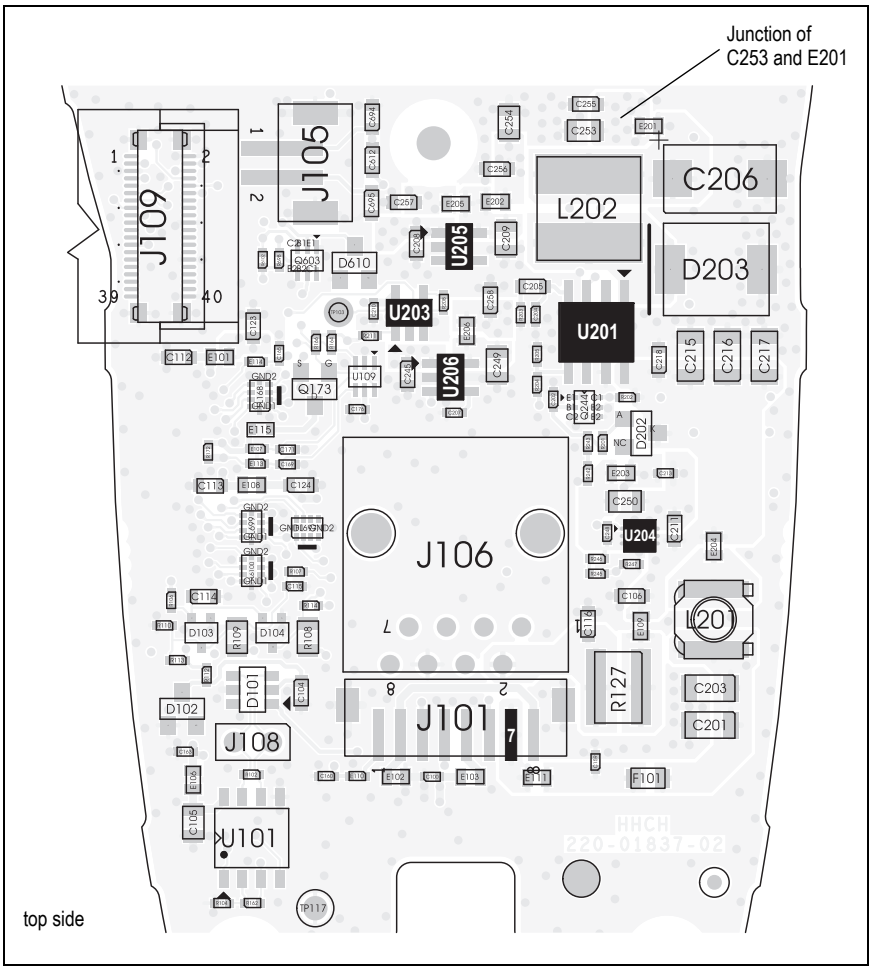

© Tait International Limited June 2023

For all faults, check that the supply voltages are correct:

Task 1 — Check the 3.3 V Supply

1. Check the 3.3 V supply voltage between E201 and C253.

E201/C253: 3.3V

   If the signal is correct, continue with Task 2.

   If the signal is not correct, continue with Step 2.

2. Visually inspect the components E201, D203, L202, R204, and R205 for open or shorted contacts. Replace if necessary.

   If the signal is now correct, continue with Task 2.

   If the signal is not correct, continue with Step 3.

3. Check the 13.8 V supply voltage between pin 7 of J101 and pin 8 of U201.

J101 pin 7: 13.8V U201 pin 8: 13.8V

   If the signal is correct, continue with Step 4.

   If the signal is not correct, continue with Step 7.

4. Check the inhibit signal at pin 3 of U201.

U201 pin 3: high: >2.2V, low: < 0.7V Normal operation: low

   If the signal is correct (low), continue with Step 5.

   If the signal is not correct (high), continue with Step 6.

5. Replace U201. If the 13.8 V is supplied directly through pin 7 of J101, change to the 13.8 V supply from the radio body and return to Step 1.

6. Check D202, C202, R201, R202, R242, R243 and Q244 for open or shorted contacts. Replace if necessary. If the 13.8 V is supplied directly through pin 7 of J101, change to the 13.8 V supply from the radio body and return to Step 1.

7. Check F101 and E111 for continuity. Replace if necessary.

   If the signal is correct (13.8 V), return to Step 1.

   If the signal is not correct, continue with Step 8.

8. Connect a 13.8 V supply directly to pin 7 of J101. Check the 3.3 V supply between E201 and C253.

E201/C253: 3.3V

   If the signal is correct, continue with Task 2.

   If the signal is not correct, return to Step 4.

Notice A fault in the hand-held control head can cause the radio body to reduce the switched 13.8 V supply shortly after power is supplied. In this case, the hand-held control head must be supplied directly through pin 7 of J101.

© Tait International Limited June 2023

Task 2 — Check the 1.2 V Supply

1. Check the 1.2 V supply voltage at C256 (1V2) and C257 (1V2_PLL).

1V2/1V2_PLL: 1.2 V

   If the signal is correct, continue with Task 3.

   If the signal is not correct, continue with Step 2.

2. Check E202 and E205 for continuity. Replace if necessary.

   If the signal is correct (1.2 V), continue with Task 3.

   If the signal is not correct, continue with Step 3.

3. Check the 1.2 V supply voltage at pin 5 of U205.

U205 pin 5: 1.2 V

   If the signal is correct, continue with Task 3.

   If the signal is not correct, continue with Step 4.

4. Replace U205. If the 13.8 V is supplied directly through pin 7 of J101, change to the 13.8 V supply from the radio body and return to Task 1.

Task 3 — Check the 2.5 V Supply

1. Check the 2.5 V supply voltage at C258 (2V5).

2V5: 2.5 V

   If the signal is correct, continue with Task 4.

   If the signal is not correct, continue with Step 2.

2. Check E206 for continuity. Replace if necessary.

   If the signal is correct (2.5 V), continue with Task 4.

   If the signal is not correct, continue with Step 3.

3. Check the 2.5 V supply voltage at pin 5 of U206.

U206 pin 5: 2.5 V

   If the signal is correct, continue with Task 4.

   If the signal is not correct, continue with Step 4.

4. Replace U206. If the 13.8 V is supplied directly through pin 7 of J101, change to the 13.8 V supply from the radio body and return to Task 1.

© Tait International Limited June 2023

Task 4 — Check the 8V Supply

1. Check the 8V supply voltage at C213 (8V0).

8V0: 8V

If the signal is correct, the power supplies are OK. Continue with Task 5.

If the signal is not correct, continue with Step 2.

2. Visually inspect the components E203, R245, R246, and R247 for open or shorted contacts. Replace if necessary.

If the signal is now correct, the power supplies are OK. Continue with Task 5.

If the signal is not correct, continue with Step 3.

3. Check the 8V supply voltage at pins 2 and 3 of U204.

U204 pin 2, pin 3: 8V

If the signal is correct, the power supplies are OK. Continue with Task 5.

If the signal is not correct, continue with Step 4.

4. Replace U204. If the 13.8V is supplied directly through pin 7 of J101, change to the 13.8V supply from the radio body and return to Task 1.

Task 5 — Check the Reset Line

1. If the 13.8V is supplied directly through pin 7 of J101, change to the 13.8V supply from the radio body.

2. With the 3.3V power supply correct and present, check the reset line at pin 1 of U203.

U203 pin 1: high: >2.2V, low: < 0.7V Normal operation: low

If the signal is correct (low), the reset line is OK.

If the signal is not correct (high), continue with Step 3.

3. Replace U203 and return to Task 1.

© Tait International Limited June 2023

7.2 LCD Display Faulty

The LCD module is connected to the hand-held control head UI board by the LCD loom. This loom connects to J2 on the bottom side of the UI board. Another loom then runs between J1 on the bottom side of the UI board to J104 on the bottom side of the main board. The LCD module display is controlled by a serial data link to the FPGA.

Figure 7.3 Connections between the hand-held control head boards and the LCD

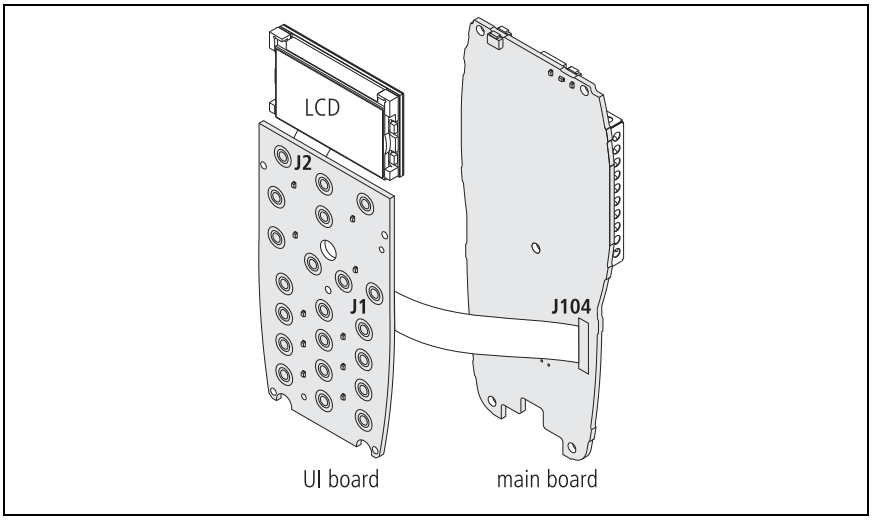

A faulty LCD display can be caused by the following:

- a faulty LCD
- a loose or dirty LCD loom connection
- a faulty connection between the UI and main board
- a fault on the main board.

For a quick check of the LCD, connect a good LCD to the UI board. If the fault disappears, replace the LCD. Carefully remove the protective plastic film from the LCD. Take care not to scratch the soft polarizer material on the top side of the LCD.

Notice This section deals only with the display of the LCD. For faults of the LCD backlighting, refer to "LCD Backlighting Faulty" on page 159.

© Tait International Limited June 2023

Figure 7.4 Circuit diagram of the LCD control circuitry

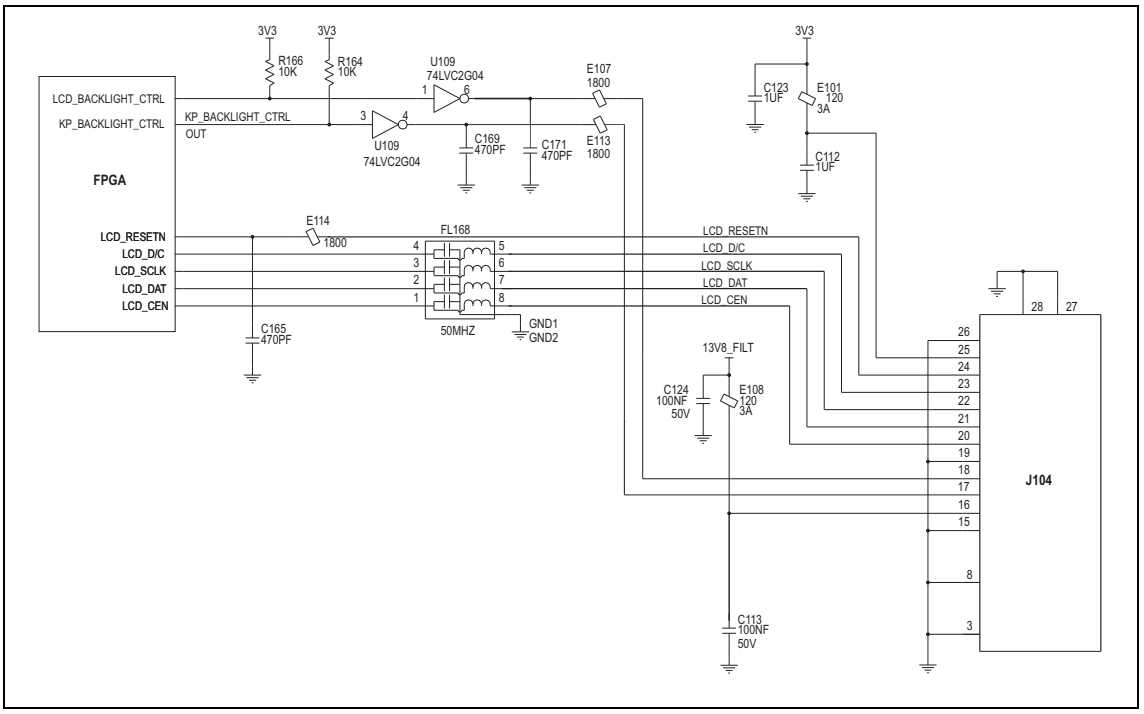

If the LCD display is faulty:

1. If some of the LCD pixels are faulty (usually complete rows or lines), send CCTM command **1006 1** to activate all LCD pixels.

   If some of the LCD pixels are faulty, replace the LCD.

2. Ensure the board-to-board loom is secure (snapped in to place).

   Also inspect for obvious connector damage or shorted and lifted connector-to-board contacts in J104 on the main board and J1 on the UI board.

3. Disconnect the LCD loom between the LCD assembly and the UI board. Visually inspect and clean the contacts, and reconnect the LCD loom. Visually inspect connector J2 on the UI board for open or shorted contacts.

4. Disconnect the loom between the UI board and the main board. Visually inspect and clean the contacts, and reconnect the loom. Visually inspect connector J1 on the UI board and J104 on the main board for open or shorted contacts.

5. Check the 3.3V supply voltage at pin 25 of J104 on the main board through to the LCD connector pin 4 of J2 on the UI board.

J104 (main) pin 25: 3.3V J1 (UI) pin 2: 3.3V J2 (UI) pin 4: 3.3V

   If the signal on J104 pin 25 is not correct, refer to "Power Supply Faulty" on page 150.

6. Use an oscilloscope to check the signals of pins 20 to 24 of connector J104 on the main board.

J104 pins 20 to 24	The signals should be switching 0 to 3.3V in bursts of 0.125ms at approximately 1s intervals.

If any of the signals are missing or distorted, remove can E100 and check for continuity between the FPGA and the LCD connector. If necessary, replace the 22Ω resistor array R305, 22Ω resistor R308, LC filter array FL168, or bead E114.

Figure 7.5 PCB layout of the LCD control circuitry

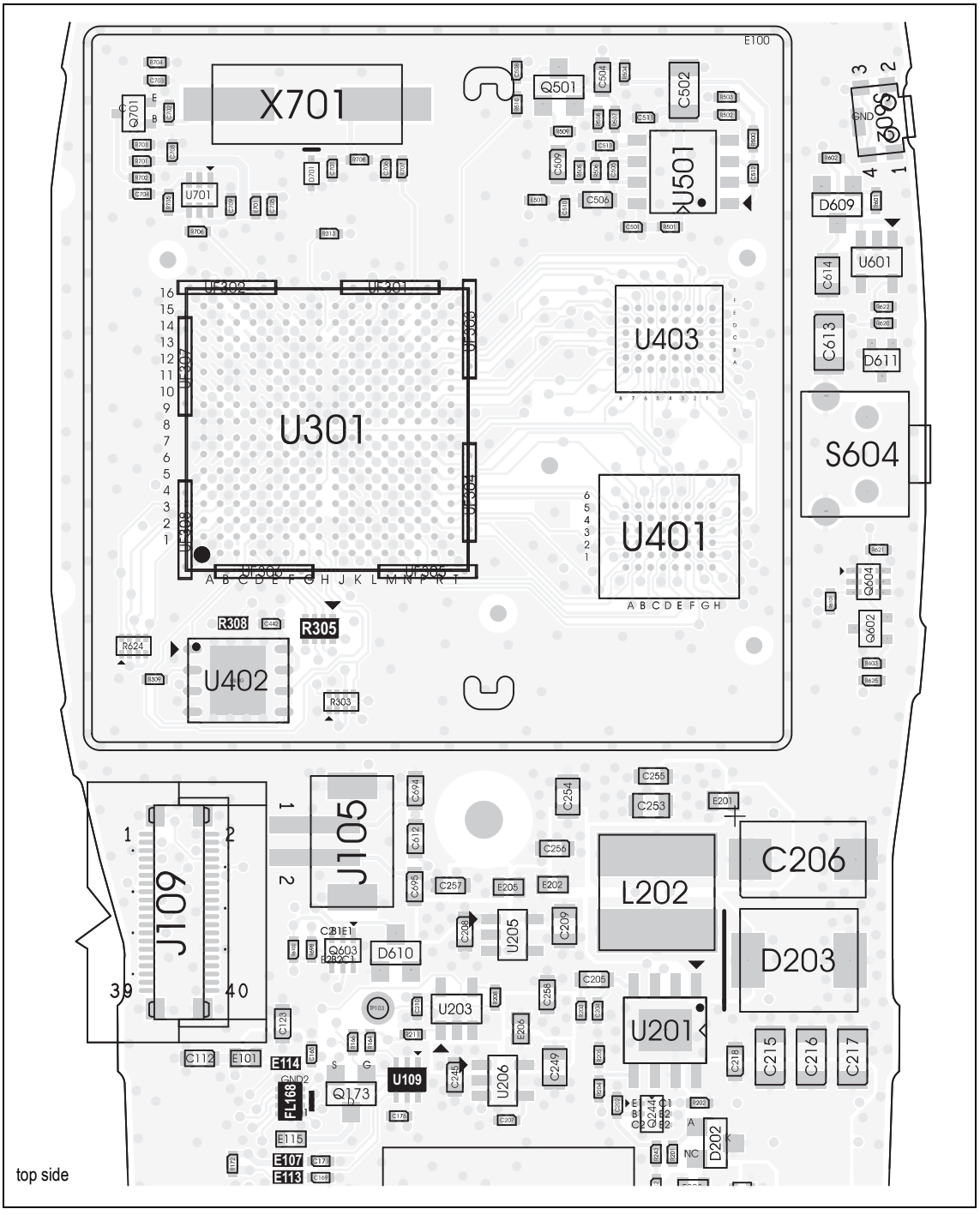

© Tait International Limited June 2023

7.3 LCD Backlighting Faulty

The backlighting incorporated in the LCD module is controlled by a data line from the FPGA, which enables backlighting driver U1.

The LCD backlighting has four brightness settings: off=GND, on=3.3 V, and two intermediate settings which are implemented by pulse-width modulation.

Figure 7.6 Circuit diagram of the LCD backlighting circuitry - UI board

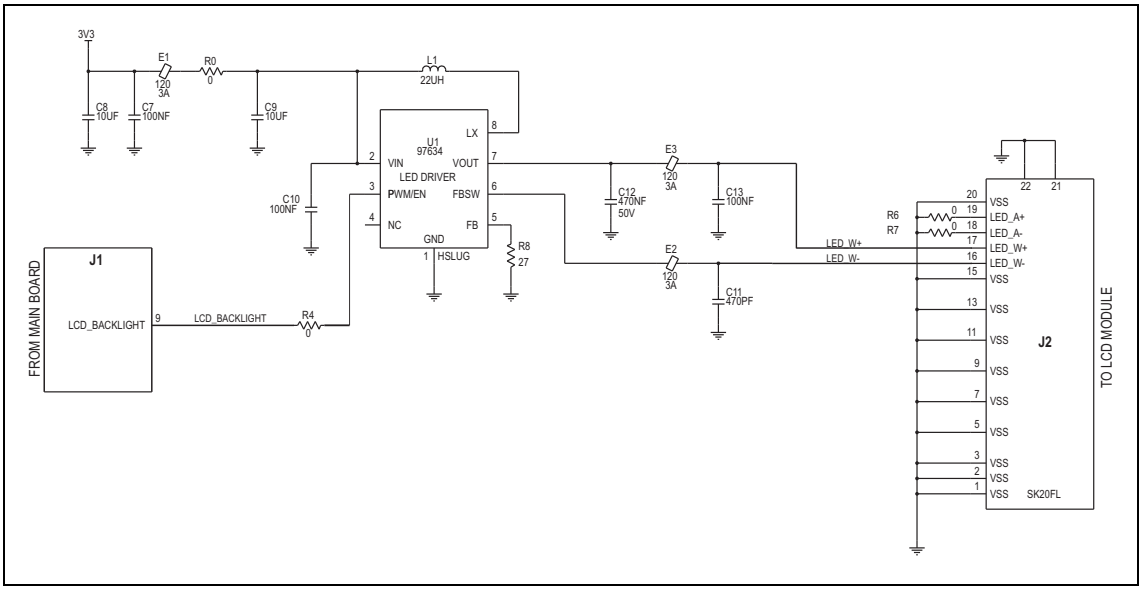

If the LCD backlighting is faulty:

1. Make sure that LCD backlighting has been enabled in the programming application. Connect a good LCD module to verify this if necessary.

2. Check the 3.3 V supply voltage at pin 2 of U1 or C10.

U1 pin 2/C10: 3.3V

   If the signal is correct, continue with Step 3.

   If the signal is not correct, check R0 and E1 for continuity. Otherwise refer to "Power Supply Faulty" on page 150.

3. Send CCTM command **1004 3** to switch on LCD backlighting.

4. Check the signal at pin 3 of U1.

U1 pin 3: high (with backlighting switched on)

   If the signal is correct, continue with Step 6.

   If the signal is not correct, visually inspect pin 3 for open contact.

   Continue with Step 5.

© Tait International Limited June 2023

5. Check R4 for open circuit. Trace LCD_BACKLIGHT through pin 9 of J1 to pin 18 of J104 on the main board. Replace the connectors or loom if necessary.

   If the backlighting is still faulty, continue with Step 6.

6. Check the continuity of E107. Check the signal at pins 1 and 6 of U109 (refer to Figure 7.4 and Figure 7.5).

U109 pin 1: low U109 pin 6: high

   Replace U109 if necessary. If the signals are correct, continue with Step 7.

   If the signals are still not correct, the FPGA is faulty and the control head main board must be replaced.

7. Check the signal at pin 7 of U1.

U1 pin 7: ≈8.4V (with backlighting switched on)

   If the signal is correct, continue with Step 8.

   If the signal is not correct, check the continuity of L1. If L1 is OK, replace U1 (or replace the PCB).

8. Check the signal at pin 5 of U1.

U1 pin 5: 0.2V

   If the signal is correct, continue with Step 9.

   If the signal is not correct, check that the resistance of R8 is 27Ω. Check the continuity of E2 and E3.

9. Visually inspect whether the contacts of pins 17 and 16 of connector J2 are open or shorted. Check the signal at pins 17 and 16 of connector J2.

J2 pins 17 and 16: ≈8.4V (with backlighting switched on)

   If the signal is correct, replace the LCD.

Figure 7.7 PCB layout of the LCD backlighting circuitry - UI board

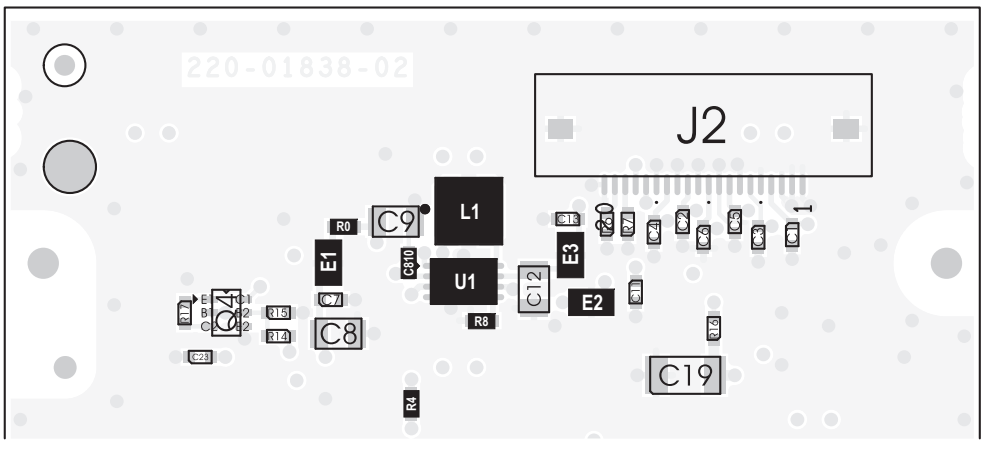

bottom side

© Tait International Limited June 2023

7.4 Status LEDs Faulty

The red, green and amber (orange) status LEDs are each controlled by an FPGA signal and individual high-side MOSFETs.

The LEDs have four brightness settings: off=GND, on=3.3 V, and two intermediate settings which are implemented by pulse-width modulation.

Figure 7.8 Circuit diagram of the status LEDs

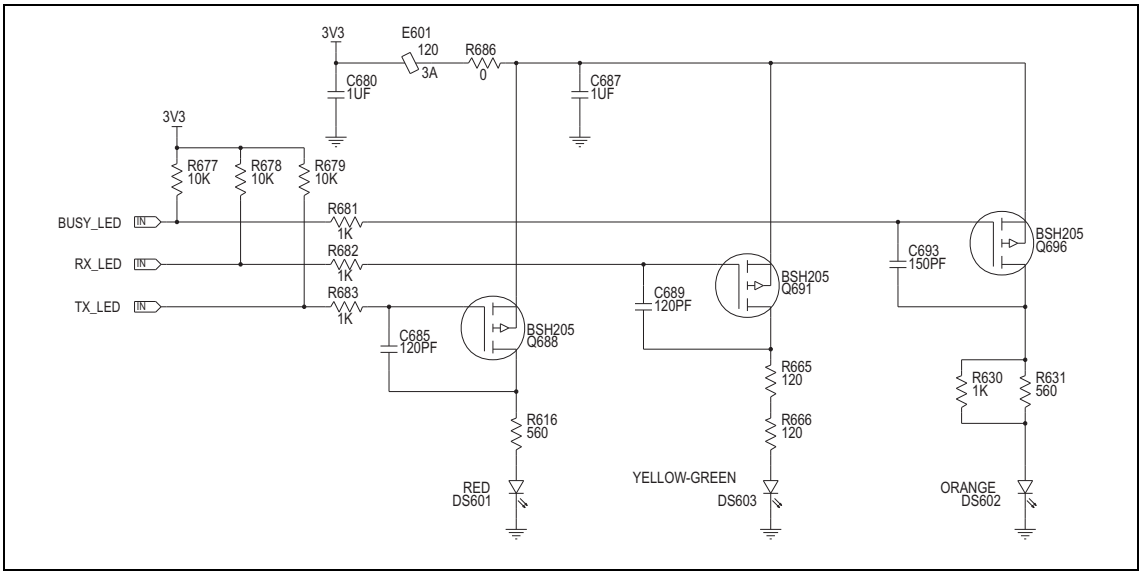

If one of the status LEDs is faulty:

1. Check the 3.3 V supply voltage at C687.

C687: 3.3V

   If the signal is correct, continue with Step 2.

   If the signal is not correct, check E601 and R686 for continuity. Otherwise refer to "Power Supply Faulty" on page 150.

2. Send CCTM command **1001 x 1** (where **x** is the LED number: 2=orange, 3=green, 4=red) to activate the relevant LED.

3. Send CCTM command **1002 3** to set the LED intensity to high.

4. Check that the corresponding control signal from the FPGA is active (low).

Tx: TX_LED low	R683
Rx: RX_LED low	R682
Busy: BUSY_LED low	R681

   If the signal is correct, continue with Step 5.

   If the signal is not correct, the FPGA is faulty and the control head board must be replaced.

© Tait International Limited June 2023

5. Check the resistors R616, R665, R666, R630 and R631 in the paths of the LEDs.

6. Check the LED voltages. For the non-operating voltage, use a DMM diode test. For the operating voltage, measure the forward voltage.

	Diode Test	Operating
DS601 (red status LED):	≈1.4V	1.8V
DS603 (green status LED):	≈1.4V	1.9V
DS602 (orange status LED):	≈1.4V	1.8V

If the voltage is incorrect, replace the LED.

Figure 7.9 PCB layout of the status LED circuitry

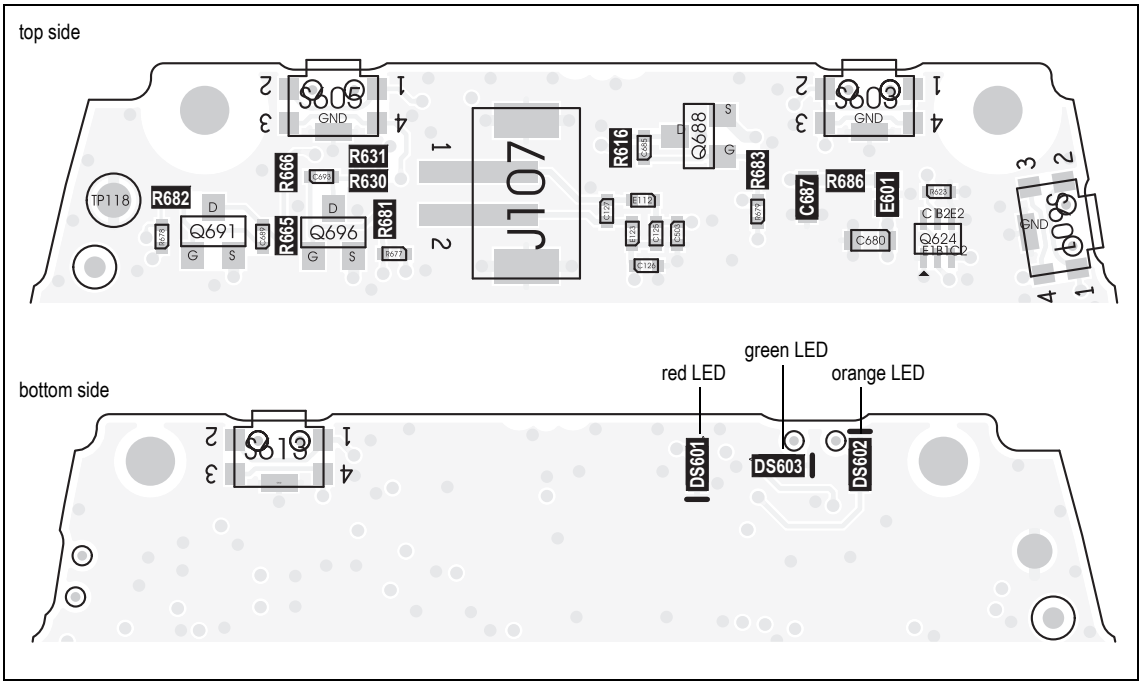

© Tait International Limited June 2023

7.5 Keypad Backlighting Faulty

The backlighting LEDs are controlled by an FPGA signal and a transistor current sink (Q4 to Q8). The brightness level is set by PWM of the FPGA control signals, resulting in four intensity levels (off, low, medium and high).

For PCB layouts, refer to Figure 7.11 on page 165 and Figure 7.12 on page 166.

Figure 7.10 Circuit diagram of the keypad backlighting - UI board

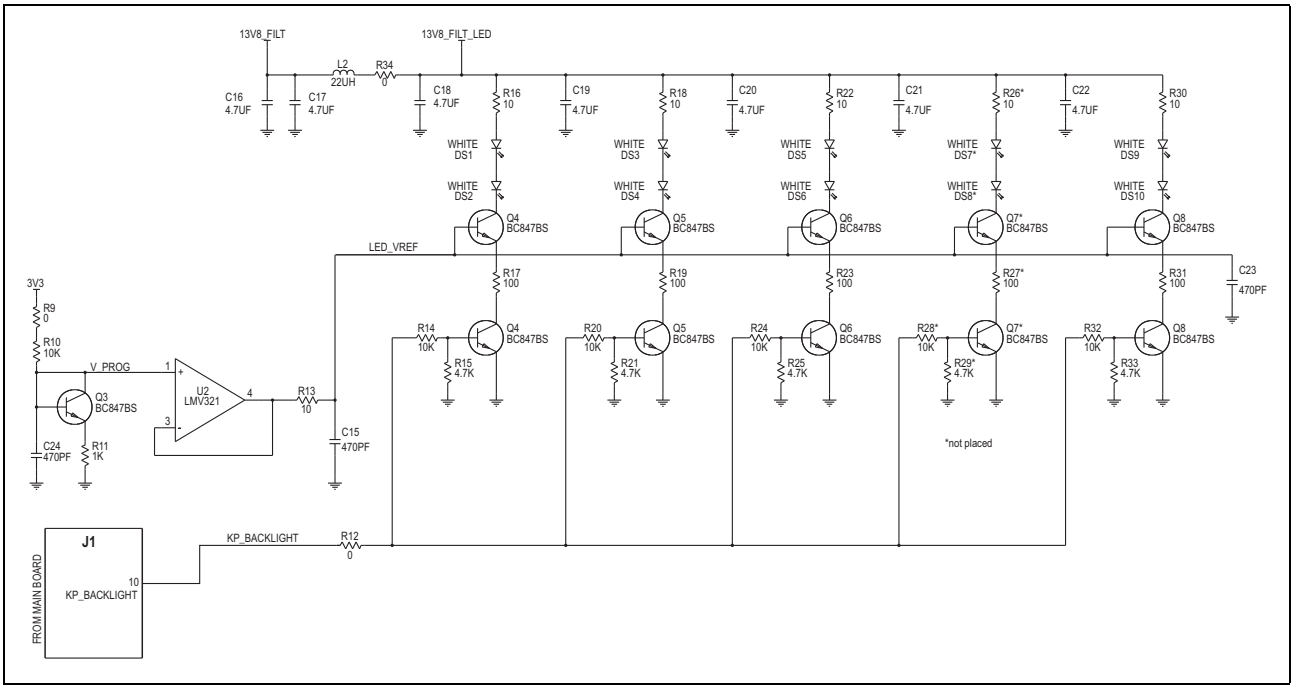

All LEDs Faulty

If none of the backlighting LEDs work:

1. Check the 13V8_FILT_LED supply voltage is present across C18.

   If the signal is correct, continue with Step 3.

   If it is not correct, check the continuity of L2 and R34. Replace if necessary. Replace the connectors or loom to the main board if necessary.

2. Check the signal at V_PROG (pin 1 of U2).

V_PROG: 0.8V

   If the signal is correct, continue with Step 3.

   If the signal is not correct, check R9, R10, Q3. Replace if necessary. Continue with Step 3.

3. Check that the voltage at pin 4 of U2 (LED_VREF) is the same as the voltage at V_PROG.

U2 pin 4=V_PROG

If the signal is correct, continue with Step 4.

If the signal is not correct, replace U2.

4. Check that the voltage at the junction of R13 and C15 (LED_VREF) is the same as the voltage at pin 4 of U2.

LED_VREF=U2 pin 4

If the signal is correct, continue with Step 5.

If the signal is not correct, replace R13 or check C15 and C23 for shorts to ground.

5. Send CCTM command **1003 3** to set the backlighting intensity to high.

6. Check the signal at R12 (KP_BACKLIGHT) with an oscilloscope.

R12: low (with backlighting switched on high)

If the signal is correct, replace the UI board.

If the signal is not correct, continue with Step 7.

7. Trace KP_BACKLIGHT through pin 10 of J1 to pin 17 of J104 on the main board. Replace the connectors or loom if necessary.

If the backlighting is still faulty, continue with Step 8.

8. Check the continuity of E113. Check the signal at pins 3 and 4 of U109 (refer to Figure 7.4 and Figure 7.5).

U109 pin 3: low U109 pin 4: high

Replace U109 if necessary. Otherwise the FPGA is faulty and the control head board must be replaced.

One Group of Backlighting LEDs Faulty

If one group of backlighting LEDs is faulty:

1. Send CCTM command **1003 x** (where **x** is the intensity: 0=off, 1=low, 2=medium, 3=high) to switch on keypad backlighting.

2. Check the 13V8_FILT_LED supply voltage is present across C18.

If it is not present, check the continuity of L2 and R34. Replace if necessary.

3. Check the enable transistor for each group Q4, Q5, Q6, and Q8 (the lower NPN of each pair).

Transistor base: ≈0.6V Transistor collector: ≈0.1V

Notice Q7 and its associated components are not placed.

© Tait International Limited June 2023

If the signals are correct, continue with Step 4.

If the signals are incorrect, check the base resistors for shorts or open circuits.

4. From top to bottom for each LED string, check the resistor, the LEDs, and the transistor for continuity.

R16	R18	R22	R30	10Ω
DS1	DS3	DS5	DS9	2.8V (on)
DS2	DS4	DS6	DS10	1.8V (on)
Q4	Q5	Q6	Q8	
R17	R19	R23	R31	100Ω

Replace faulty parts as necessary.

Figure 7.11 PCB layout of the keypad backlighting - UI board bottom side

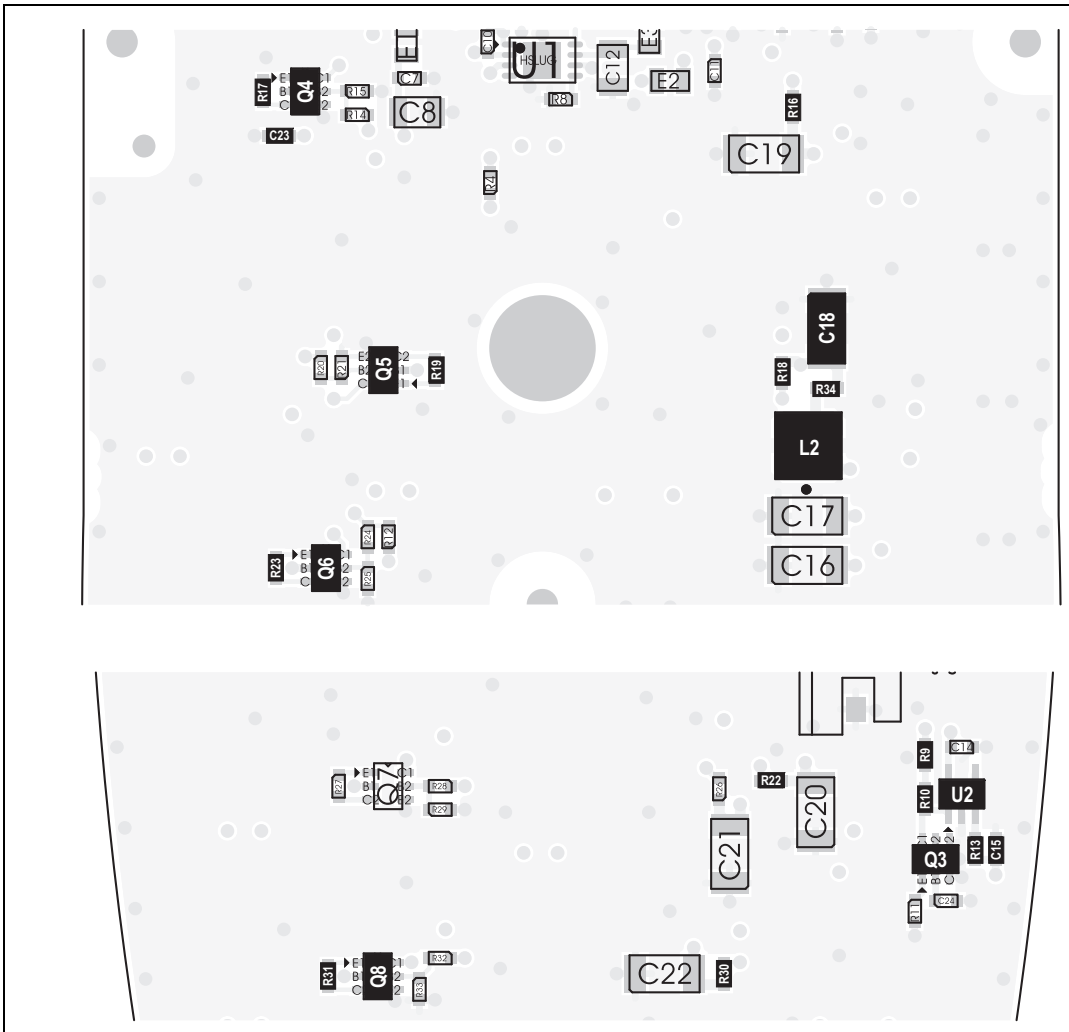

Figure 7.12 PCB layout of the keypad backlighting - UI board top side

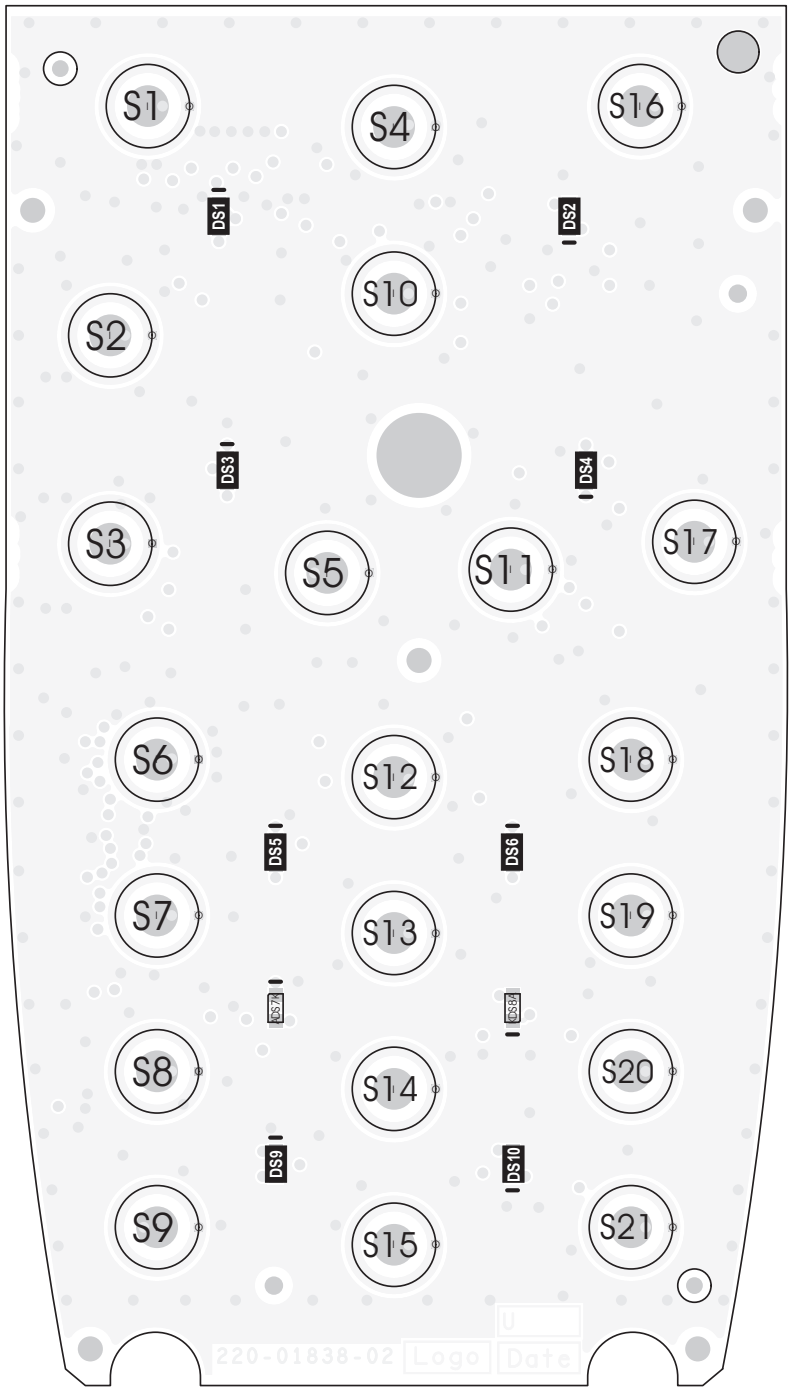

© Tait International Limited June 2023

7.6 On/Off Key Faulty

When battery power (13.8V) is applied to the radio, a press of the on/off key or PTT key will create an active low signal (CH_ON_OFF) back to the radio body to initiate the power-on or power-off sequence. This key press will also be detected by the FPGA of the control head through Q604 or Q603 (for PTT and on/off respectively) as an active low signal.

Figure 7.13 Circuit diagram of the on/off key and PTT

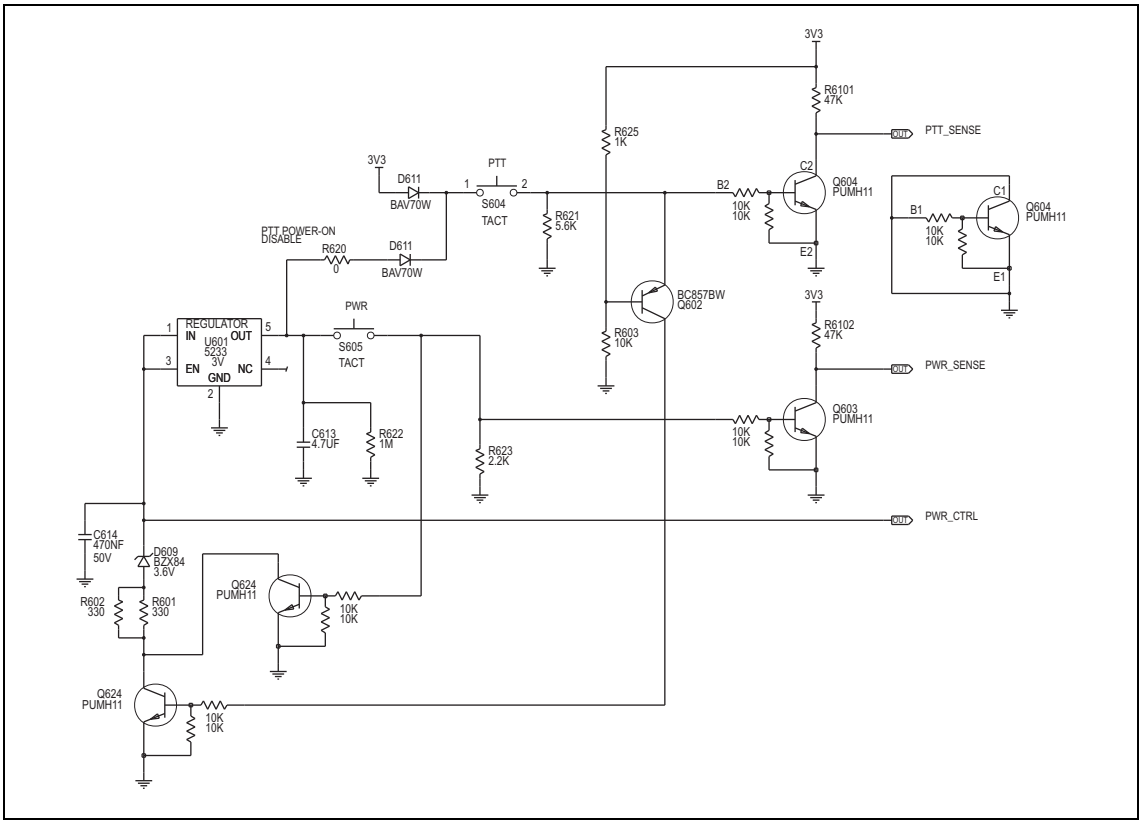

If the on/off key will not power up or shut down the radio:

1. Check the signal level at pin 1 of U601.

U601 pin 1: 13V

   If not 13.8V, work backwards through E110 and to J101 pin 1. Replace E110 if the signal continuity is broken at the component, otherwise visually inspect J101 and finally the connectivity to the radio remote interface board.

2. Check the signal level at pin 5 of U601.

U601 pin 1: 3V

   If the signal level is incorrect, replace U601.

3. Depress S605 and check that the signal level matches on both sides.

S605: 3V or continuity when pressed

   If continuity is not present, replace S605.

© Tait International Limited June 2023

4. Inspect the signal level at the junction of Q603 and R6102 (PWR_SENSE). It should be the opposite of the signal level measured at S605.

Q603 / R6102:	3.3V when switch open 0.0V when switch closed

If this is incorrect, first check R6102 visually and for proper resistance value. Replace the transistor if R6102 is okay.

Figure 7.14 PCB layout of the on/off key and PTT

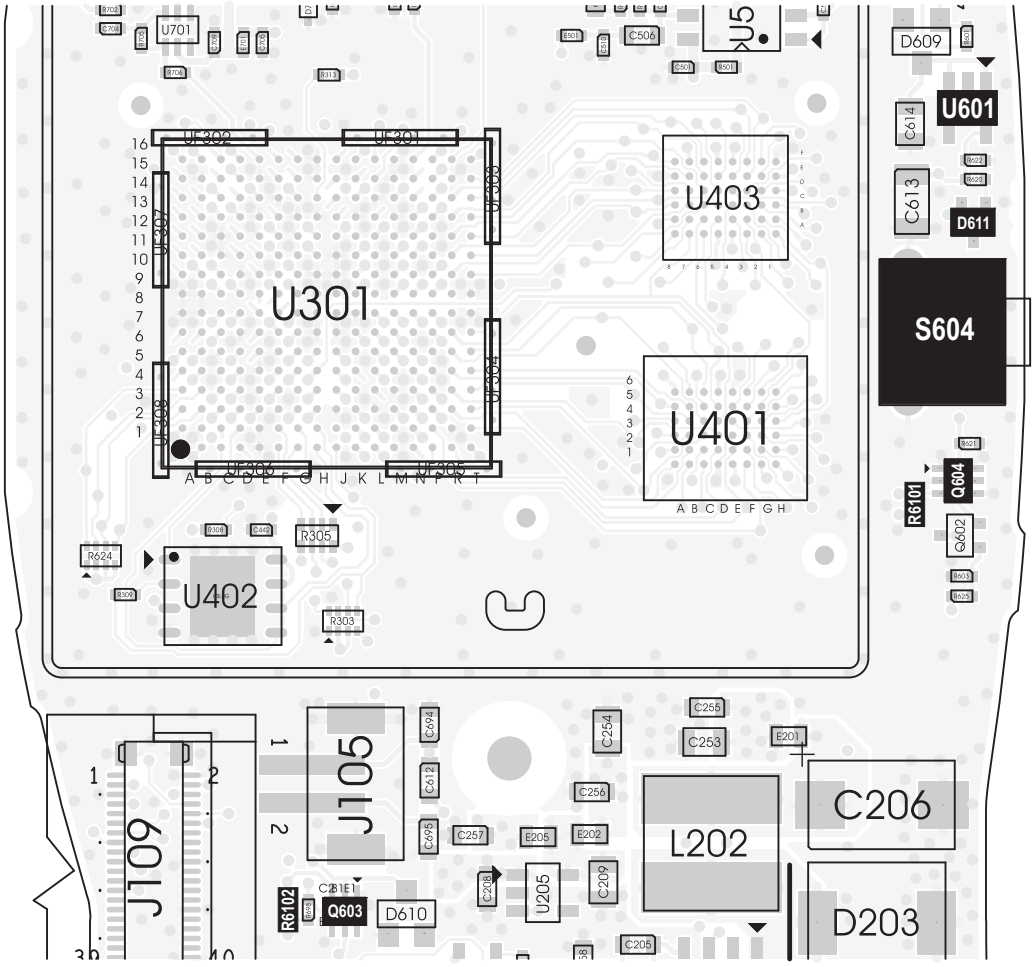

© Tait International Limited June 2023

7.7 PTT Faulty

For a circuit diagram and PCB layout, refer to Figure 7.13 on page 167 and Figure 7.14 on page 168.

If the PTT key will not power up the radio:

1. Check the signal level at pin 1 of U601.

U601 pin 1: 13V

   If not 13.8V, work backwards through E110 and to J101 pin 1 (refer to Figure 7.19 on page 176). Replace E110 if the signal continuity is broken at the component, otherwise visually inspect J101 and finally the connectivity to the radio remote interface board.

2. Check the signal level at pin 5 of U601.

U601 pin 1: 3V

   If the signal level is incorrect, replace U601.

3. Check the signal level at D611.

D611 anode: 3V D611 cathode: 2.5V

   Notice This test is only valid when the unit is turned off. If the device has already been turned on, the local 3.3V rail will provide power to the PTT switch circuit via D611b. This is isolated from U601 by D611a.

   If the signal level is incorrect, replace D611.

4. Depress S604 and check that the signal level matches on both sides.

S604: continuity when pressed

   If continuity is not present, replace S604.

5. Inspect the signal level at the junction of Q604 and R6101 (PTT_SENSE). It should be the opposite of the signal level measured at S604.

Q604 / R6101:	3.3V when switch open 0.0V when switch closed

   If this is incorrect, first check R6101 visually and for proper resistance value. Replace the transistor if R6101 is okay.

© Tait International Limited June 2023

7.8 Keys Faulty

All keys are connected to the FPGA in an array of four columns and six rows. During idle operation, the KB_ROW signals are driven low by the FPGA and the KB_COL signals (pulled high by an external resistor) are monitored for activity by the FPGA. A key press will generate a high-to-low transition on the associated column KB_COL signal. This, in turn, will initiate a sequence of high output levels on the KB_ROW signals to identify which key was pressed.

The signal at the column side of the switch should be 3.3V. The row side of the switch should be GND. A successful press will cause transition on associated KB_COL signal to low.

CCTM command 1009 can be used to monitor keypad and power button press and release events (including PTT and hook switch).

For a PCB layout, refer to Figure 7.16 on page 172.

Figure 7.15 Circuit diagram of the keys

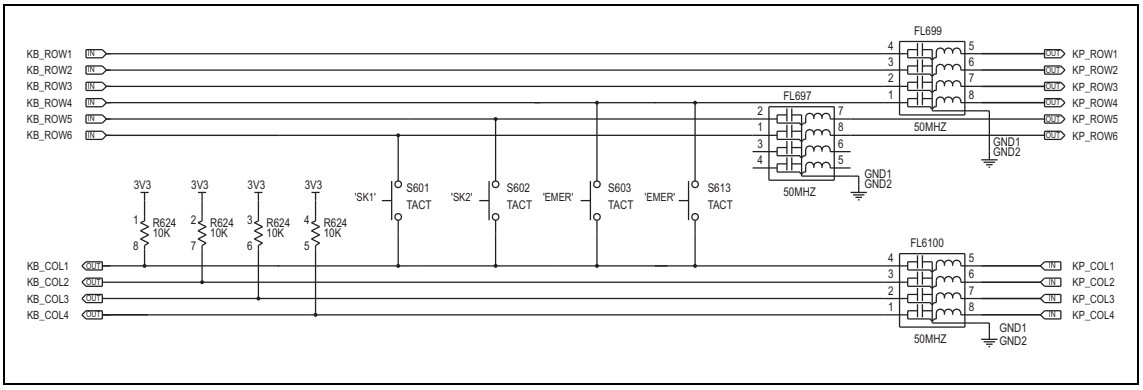

One Key Faulty: Main Keypad

If an individual keypad key (activated through the UI board) is faulty:

1. Use isopropyl alcohol and a soft lens-cleaning cloth to clean the pad of the PCB switch contacts.
2. Visually inspect both PCB switch contacts (A and B) of a key for short-circuits. Repair if necessary.

One Key Faulty: Side or Top Function Key

If an individual key is faulty, check switch continuity with a multimeter, and replace the switch if necessary.

© Tait International Limited June 2023

Several Keys Faulty

The keypad matrix is arranged as six rows by four columns, as shown in the following table.

	Column 1	Column 2	Column 3	Column 4
Row 1				
Row 2	⊕	**F4**	**F4**	**F6**
Row 3	⊖	**1**	**2**	**3**
Row 4	**F1**	**4**	**5**	**6**
Row 5	**F2**	**7**	**8**	**9**
Row 6	**F3**	*	**0**	#

Keys can be failing in groups of four or six, correlating with a specific fault in the column and row detection scheme.

If one column of keys is faulty (for example, column 1), check the associated connecting pins on the inline filter FL6100 and pull-up resistor R624. Also check the continuity between the main board (J104) and the UI board (J1), including the seating of the loom.

If one row of keys is faulty, check the associated inline filters FL699 and FL697. Also check the continuity between the main board (J104) and the UI board (J1), including the seating of the loom.

© Tait International Limited June 2023

Figure 7.16 PCB layout of the keys

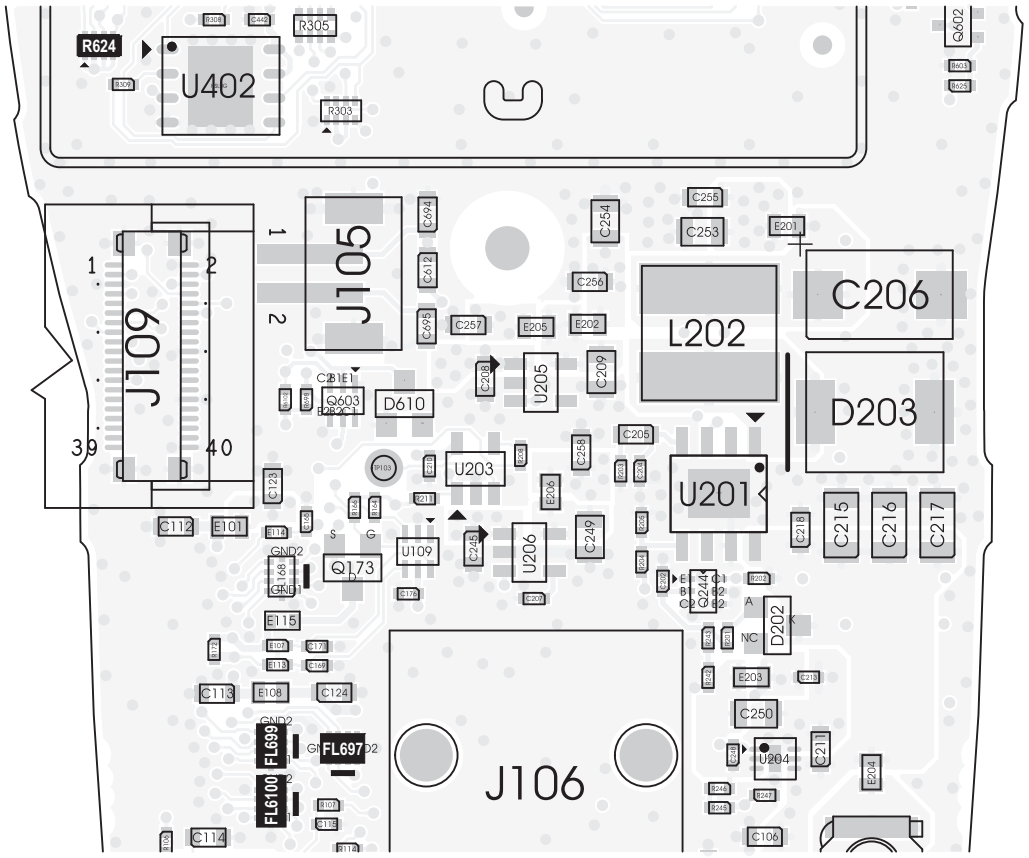

top side

© Tait International Limited June 2023

7.9 Microphone Faulty

If the microphone audio is not heard during transmission, trace the signal from its source, J107, through to the cable connector, pin 4 of J101.

For a PCB layout, refer to Figure 7.18 on page 175.

Figure 7.17 Circuit diagram of the microphone

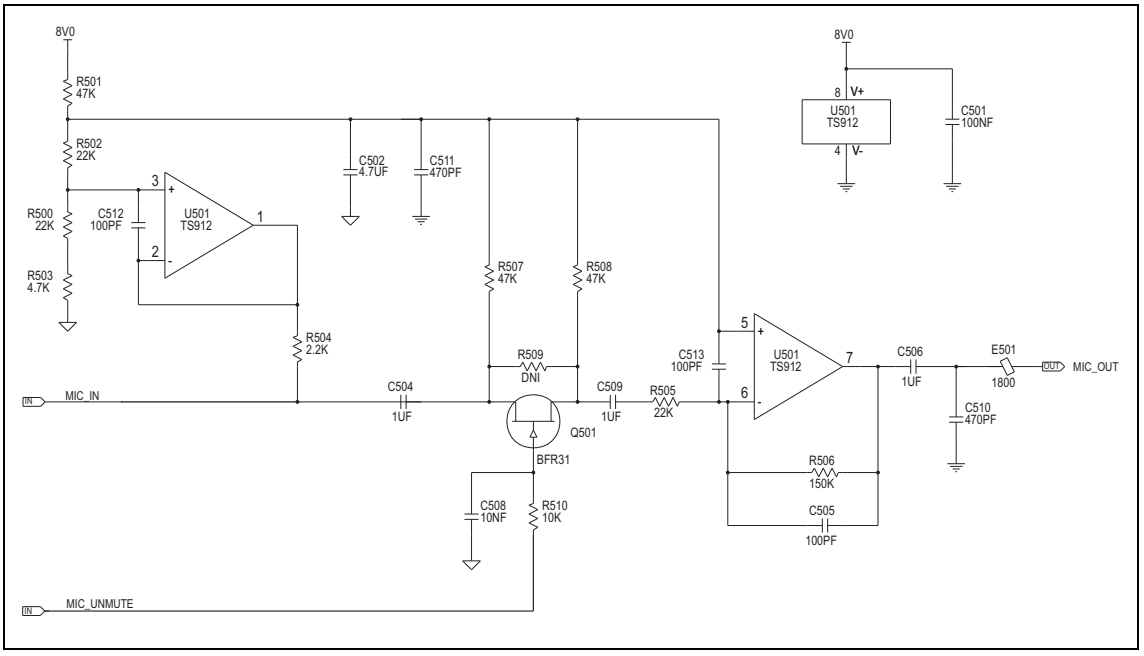

1. Remove the microphone loom and check the DC bias on pin 1 of J107 (MIC_IN).

MIC_IN: ≈2.2V

   If the signal is correct, continue with Step 5.

   If the signal is incorrect, continue with Step 2.

2. Visually inspect and check the signal on R501 and U501 pin 8.

R501: 8.0V

   If this signal is incorrect, suspect U204. Check and replace if necessary.

3. Verify the remaining levels in the voltage divider made up by R501 to R503.

R501 / R502: 4.1V U501 pin 3: 2.2V

   If any of these levels are incorrect, first visually inspect and then measure the resistors to verify proper assembly.

   Also inspect C502, C511 and U501 for short circuit or poor assembly.

© Tait International Limited June 2023

Notice These signals must be correct before proceeding.

4. Check the signal on pin 1 of U501.

U501 pin 1: ≈2.2V

If this signal is incorrect, replace U501.

5. Use a signal generator to apply a known signal (suggest 1 kHz sine wave with amplitude of 100 mVp-p) to the input J107.

   Quickly check the system output, either through a radio transmission or measured by an oscilloscope, at pin 4 of J101. If the problem has been solved, replace the microphone loom with a known good one.

6. Check the signal on pin 6 of U501.

U501 pin 6: equal to input signal (1 kHz sine wave, 100 mVp-p)

If this signal is incorrect, visually inspect and check the signal at C504, Q501, C509, and R505.

C504, Q501, C509, R505: equal to input signal

7. Check that MIC_UNMUTE is high and the gate of Q501 is high. CCTM command 1020 can be used to toggle the line.

8. Once the input signal reaches pin 6 of U501, check the signal at pin 7 of U501.

U501 pin 7: 7x input signal (1 kHz sine wave, 0.7 Vp-p)

If this signal is correct, proceed to Step 10.

9. Visually inspect R506 and R505 for assembly. If no faults are found, verify the values.

R506: 150 kΩ R505: 22 kΩ

Incorrect values of R505 and R506 will give an output signal other than 7x the input signal. Specifically, the output signal will be (R506/R505)x input signal. Replace if necessary.

If no assembly faults are found and the amplifier output signal (at pin 7 of U501) is still incorrect, replace U501.

10. Inspect C506, E501 and R103 for assembly. Check the signal level at each. (R103 is shown in Figure 7.19 on page 176 and Figure 7.20 on page 178.)

C501: 7x input signal E501: 7x input signal R103: 7x input signal

If incorrect, replace as needed.

11. Check D101 for assembly and possible internal short circuit. Replace as required.

© Tait International Limited June 2023

Figure 7.18 PCB layout of the microphone

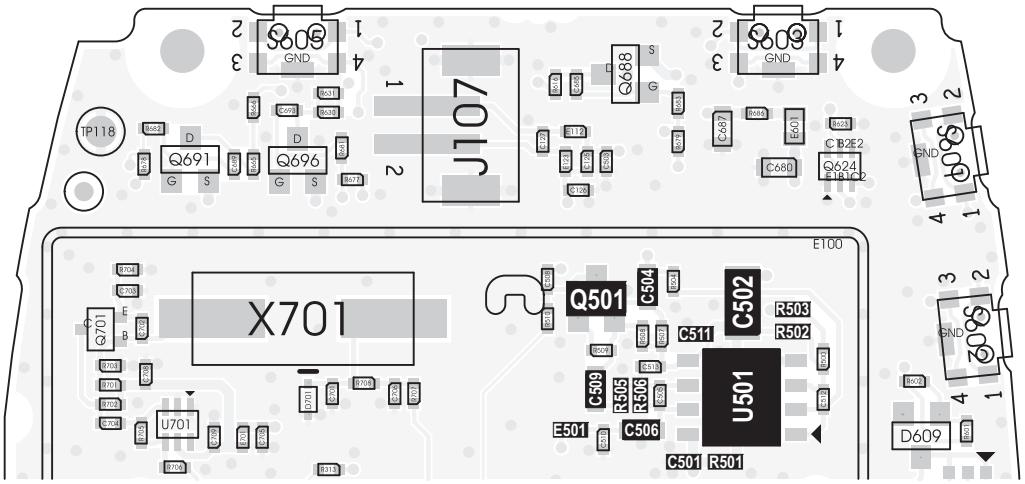

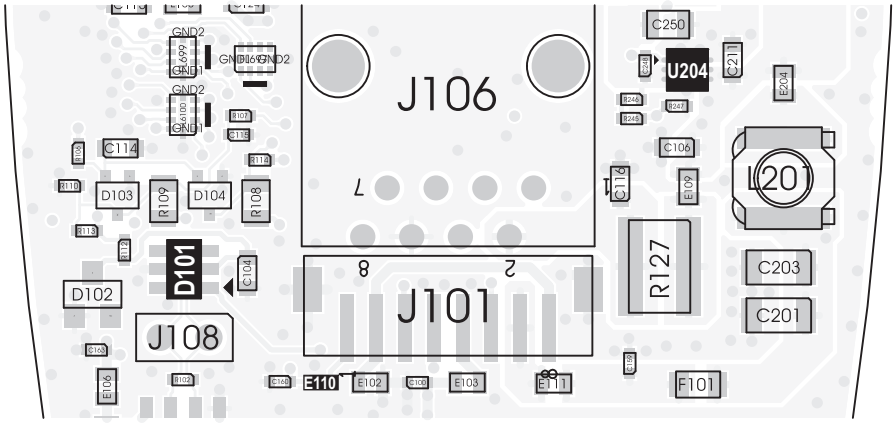

top side

7.10 Communications Faulty

The control head is dependant on communications from the radio body to perform a proper startup. If the control head does not receive synchronisation messages or its message responses are not received by the radio body, the system will not start properly. This can often appear to be a completely dead unit.

The signals transmitted from the radio to the control head and back are changed from single ended to differential signals (mirrored images) for travel through the cable. These paired and opposite signals are translated back to single ended signals by U101.

It is important to note that the radio body may send only a limited number of messages to the control head. These will be sent in bursts of varying length that are separated by approximately 100 ms for about 10 seconds total. Triggering the oscilloscope on one of these lines will be required. It may also be necessary to restart the radio body occasionally to reactivate the incoming messages during the troubleshooting process.

Figure 7.19 Circuit diagram of the communications with the radio body

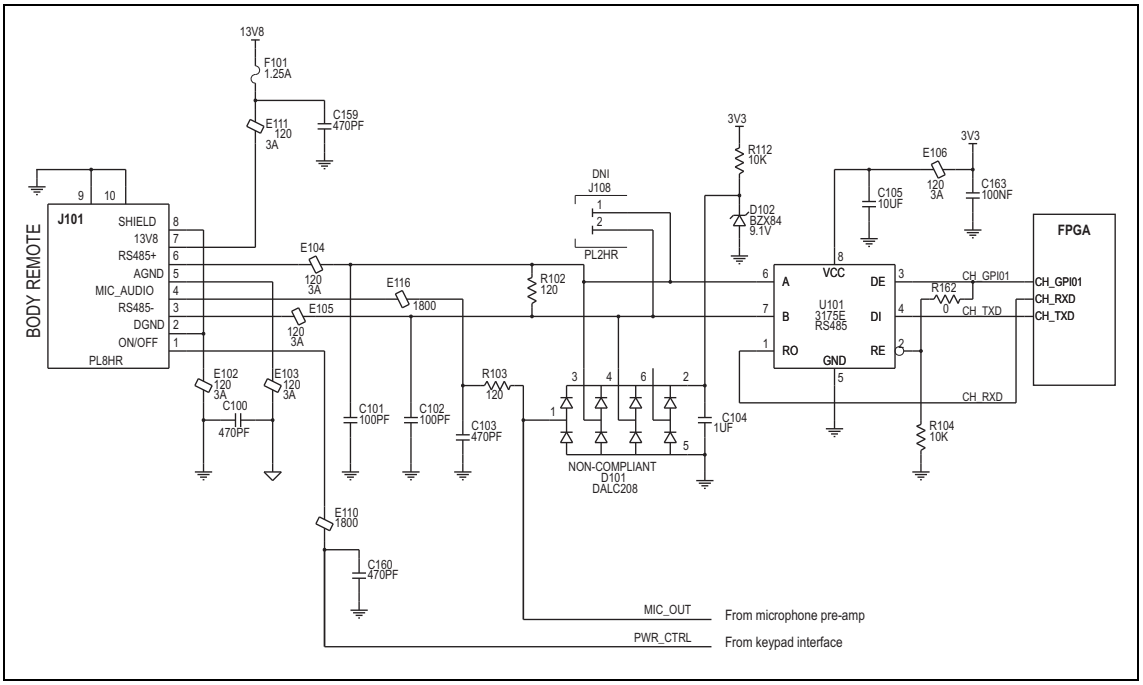

© Tait International Limited June 2023

1. Check the incoming signals. Verify the differential signals from pins 3 and 6 of J101 through to pins 6 and 7 of U101.

ⓘ Suggest a horizontal scale of 100 µs per divisions. J108 can be fitted with a 0.1 inch pin header that matches many differential probes.

Problem areas may include:

- E104 and E105 assembly errors (open circuits).
- Incorrect value or assembly of R102.
- Incorrect assembly of D101 (external short circuits)
- Internal fault of D101.

If the incoming signals reach pins 6 and 7 of U101, proceed to step 2.

2. Check the signal at pin 1 of U101.

   This output should match the incoming differential signal. While triggering on pin 6 or 7, verify that the signal on pin 1 matches the same pulse width and duration. (The signal may be opposite in polarity, depending on triggering).

   If no signal is present, or the signal is notably different than the incoming signals, replace U101.

3. Check the signal at pin 4 of U101.

   The control head outgoing signals will be sent to the RS485 transceiver through pin 4. If messages are being properly received (steps 1 and 2 passed), a reply should be present on pin 4.

   If no signal is ever present on pin 4 (and the incoming signal path appears to be operating correctly), the FPGA is damaged and the control board must be replaced.

4. Check the outgoing signals at pins 6 and 7 of U101.

   If the response is evident on pin 4 of U101, then the outgoing message should be relayed through to pins 6 and 7. It will be necessary to trigger on pin 4 because incoming messages will also be present on pins 6 and 7.

   While triggering on pin 4, observe pins 6 and 7 to verify a signal that matches the waveform of pin 4.

   If no output signal is generated, replace U101.

© Tait International Limited June 2023

Figure 7.20 PCB layout of the communications with the radio body

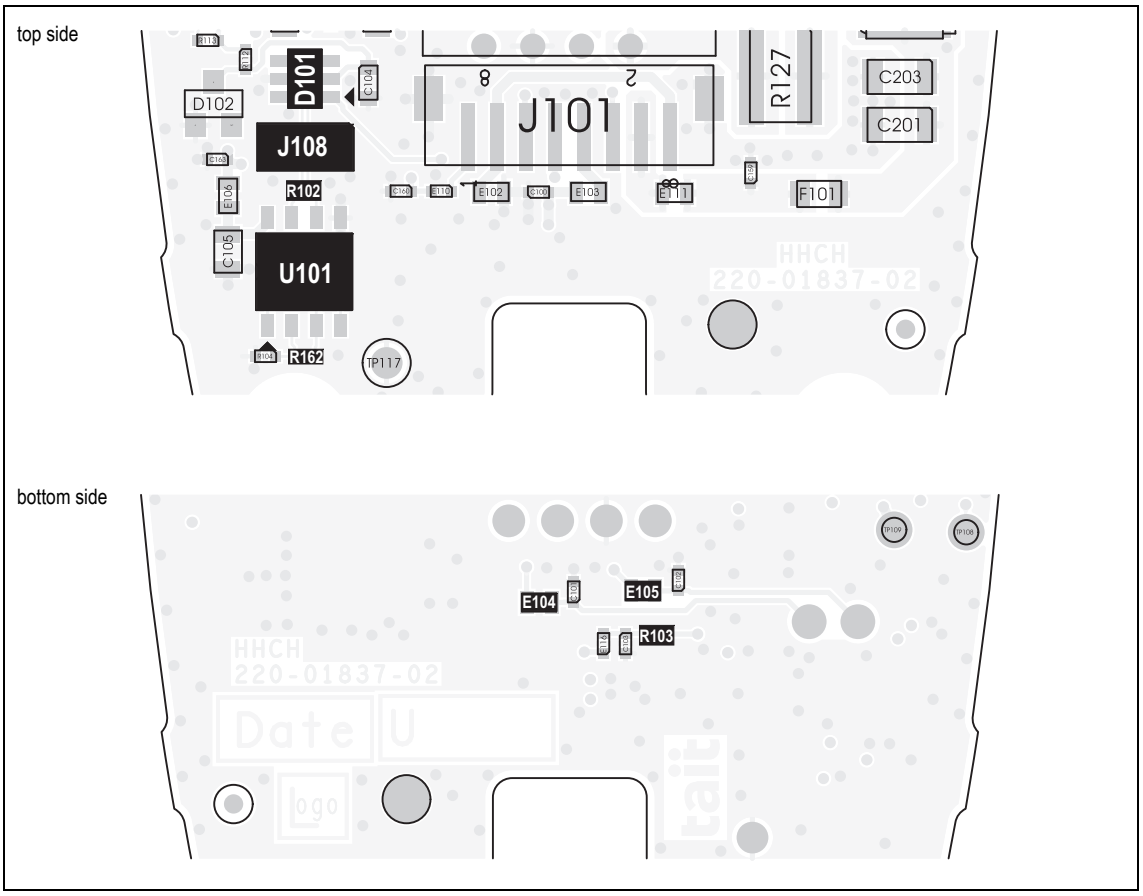

© Tait International Limited June 2023

8 Spare Parts

This chapter identifies serviceable parts in a TM9300 or TM9400 radio and, where applicable, shows which spares kit provides each part.

For information on the numbering systems associated with the TM9300 and TM9400 radios, see “Tait Product Numbering” on page 25.

© Tait International Limited June 2023

8.1 Illustrated Spare Parts Catalogue

The parts of the radio are listed in the following tables:

- radio body Table 8.1
- graphical control head Table 8.2
- 2- or 3-digit control head Table 8.3
- handheld control head Table 8.4
- programming control head Table 8.5

The number in the Pos. column refers to the position of the item in the associated illustration:

- radio body Figure 8.1 and Figure 8.2
- graphical control head Figure 8.3
- 2- or 3-digit control head Figure 8.4
- handheld control head Figure 8.5
- programming control head Figure 8.6

The tables list the IPN or product code of each individual part, and the order code of the spares kit that contains that part.

An -xx in an IPN or product code represents an issue number. Unless otherwise indicated, you can generally order only the latest issue of a part.

Board Components

Board components are not listed in this chapter. For details of board components please obtain the relevant PCB Information document as described in "Obtain a PCB Information Document" on page 55.

Before ordering a board component see also "SMT Repairs (PCB Components)" on page 54. It may be more cost effective to replace a board than to replace a board component.

© Tait International Limited June 2023

Figure 8.1 Spare parts of the radio body

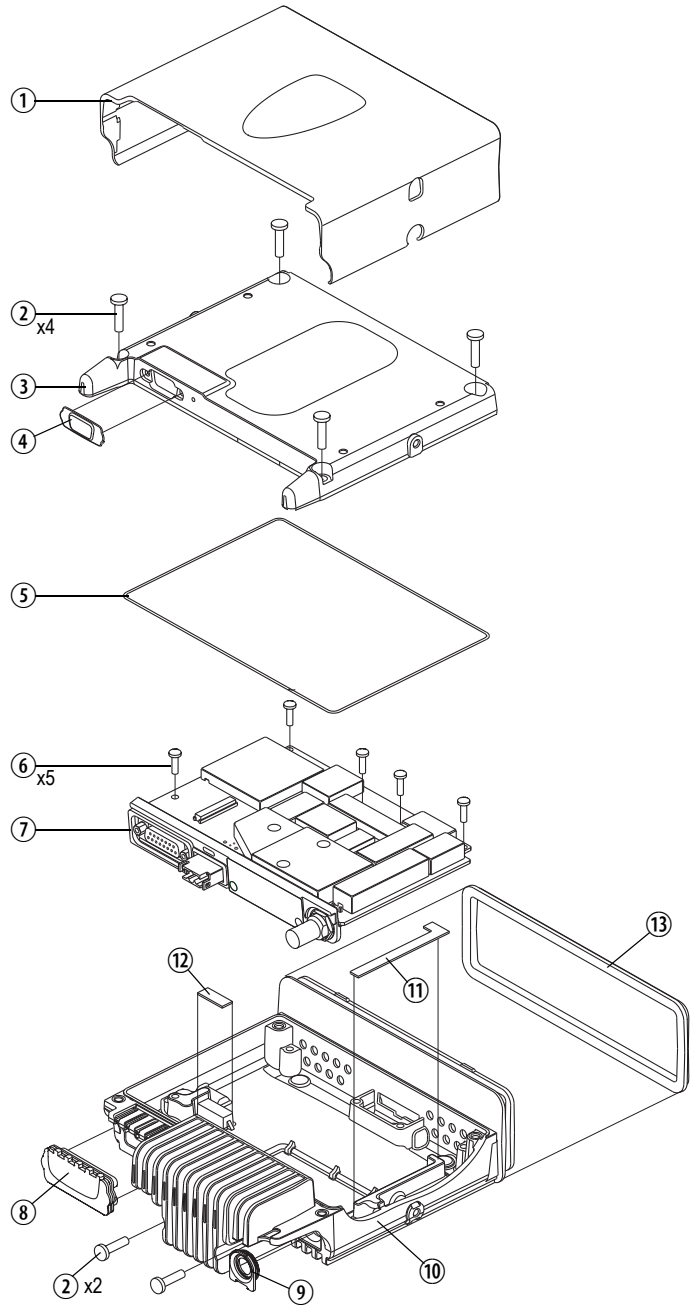

Use Table 8.1 on page 183 as the key to this figure.

Figure 8.2 Spare parts of the radio body (main board assembly)

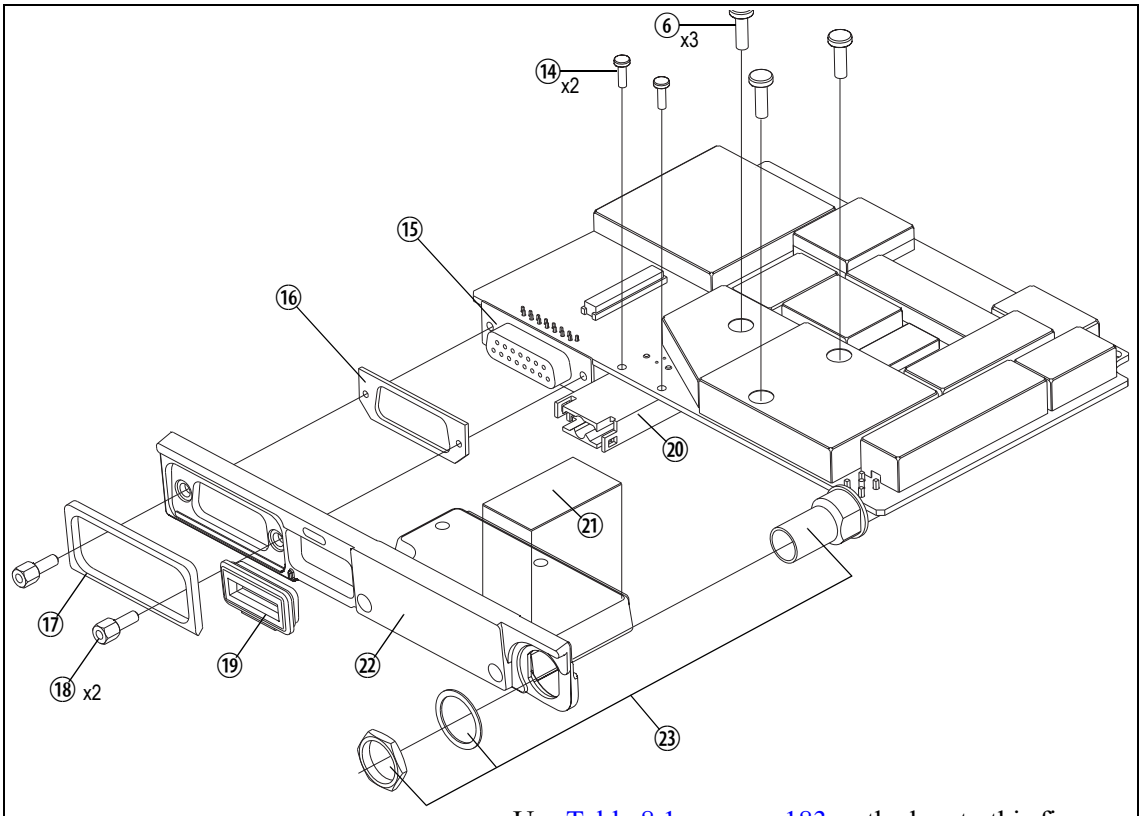

Use Table 8.1 on page 183 as the key to this figure.

© Tait International Limited June 2023

Table 8.1 Spare parts of the radio body

Pos.	Description	Qty.	IPN[1]	Spares Kit
①	Cover	1	–	TMAA22-02 mech. kit
②	Screw M4 x 16mm	6	349-02067-**xx**	TMAA22-02 mech. kit
③	Lid	1	312-01091-**xx**	–
④	Bung for aperture for external options connector	1	302-50000-**xx**	TMAA22-02 mech. kit
⑤	Main seal	1	362-01109-**xx**	TMAA22-02 mech. kit
⑥	Screw M3 x 10mm	8	349-02066-**xx**	TMAA22-02 mech. kit
⑦	Main-board assembly (TM9300)	1	–	Contact Tait Support with the product code and serial number of your RF board.
⑦	Main-board assembly (TM9400)	1	–	
⑧	Bung for auxiliary connector	1	302-50001-**xx**	TMAA22-02 mech. kit
⑨	Seal for RF connector	1	362-01113-**xx**	TMAA22-02 mech. kit
⑩	Chassis (>25W radio) Chassis (25W radio)	1 1	303-11301-**xx** 303-11225-**xx**	– –
⑪	Gap pad for chassis (>25W radio only)	1	369-01048-**xx**	TMAA22-02 mech. kit TMAA22-98 gap pad kit
⑫	Gap pad for chassis		316-80040-**xx**	TMAA22-02 mech. kit
⑬	Control head seal	1	362-01115-**xx**	TMAA22-02 mech. kit TMAA22-07 seals kit
⑭	Screw for power connector (>25W radio) Screw for power connector (25W radio)	2 2	346-10022-07 346-10030-08	–
⑮	Auxiliary connector [SK101]	1	240-02022-**xx**	–
⑯	Inner foam seal for auxiliary connector	1	362-01110-**xx**	TMAA22-02 mech. kit
⑰	Outer foam seal for auxiliary connector	1	362-01112-**xx**	TMAA22-02 mech. kit
⑱	Lock-nut for auxiliary connector	2	354-01043-**xx**	TMAA22-02 mech. kit
⑲	Rubber seal for power connector (>25W radio) Rubber seal for power connector (25W radio)	1 1	362-01127-**xx** 362-01114-**xx**	TMAA22-02 mech. kit
⑳	Power connector [PL100] (>25W radio) Power connector [PL100] (25W radio)	1 1	240-00040-**xx** 240-00027-**xx**	–
㉑	Gap pad for copper plate (50W/40W radio only)	1	369-01049-**xx**	TMAA22-02 mech. kit TMAA22-98 gap pad kit
㉒	Heat-transfer block	1	308-13147-**xx**	–
㉓	Antenna connector [SK103] (mini-UHF), or Antenna connector [SK103] (BNC) (both incl. lock washer and hexagonal nut)	1 1	240-00029-**xx** 240-00028-**xx**	–

1. The characters **xx** in an IPN stand for the issue number. Items will always be the latest issue at the time the radio is manufactured.

Figure 8.3 Spare parts of the graphical control head

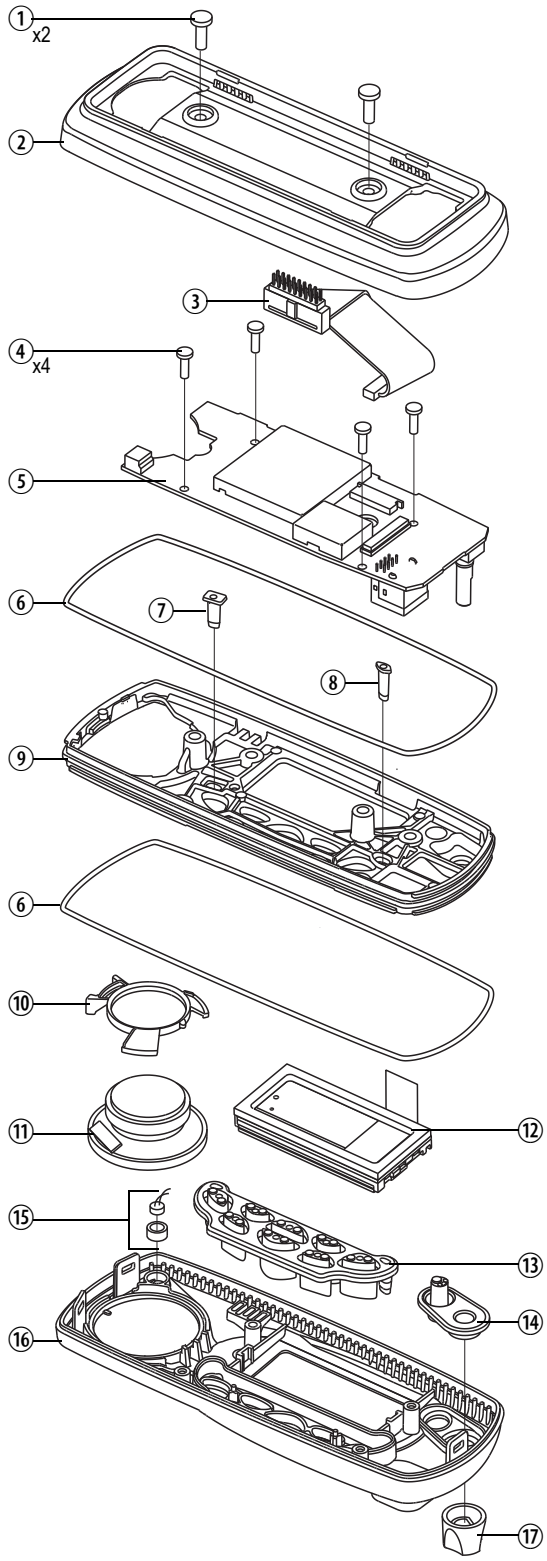

Use Table 8.2 on page 185 as the key to this figure.

© Tait International Limited June 2023