QUICK START GUIDE

Read this manual carefully and save it for future reference.

B6

WHAT'S IN THE BOX

Camera | Solar Panel | Type-C Power Cord | Template Sticker | Pack of Screws

PRODUCT DIAGRAM

1. Antenna
2. Photosensor
3. PIR
4. Indicator Light
5. Lens
6. LED White Lights
7. Microphone
8. Type-C Port
9. Reset Button
10. Power Button
11. TF Card Slot

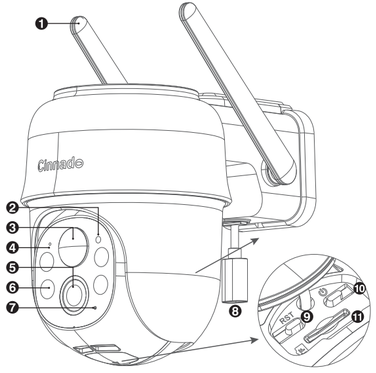

SETUP

- Download the "Wansview Cloud" app, create an account and then log in.
- Make sure the camera is fully charged. Press the power button for about 5 seconds until you hear the startup voice prompt. Then press the reset button for about 5 seconds until the indicator light flashes red and blue alternately.
- Open the "Wansview Cloud" app, tap the "+" or "Add device" button, find the B6 camera in the list, then follow the in-app instructions.

Download on the App Store

Get IT ON Google Play

INDICATOR LIGHTS STATUS

Light Status	Camera Status
Solid red light	Camera powered-on
Flashing red and blue light	Camera ready for connection
Flashing blue light	Wi-Fi connection in progress
Solid blue light	Camera working properly
Flashing red light	Reset / firmware upgrade in progress

INSTALLATION

1 . Remove the mounting bracket from the camera.

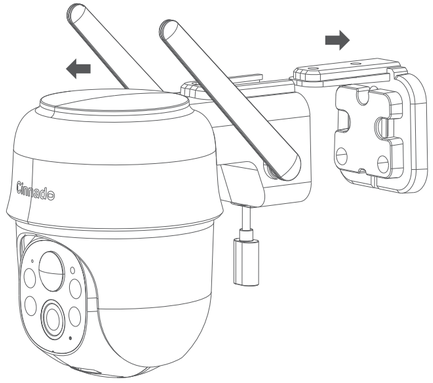

2. Drill several holes in the wall with the aid of the template sticker, then screw the mounting bracket on the wall.

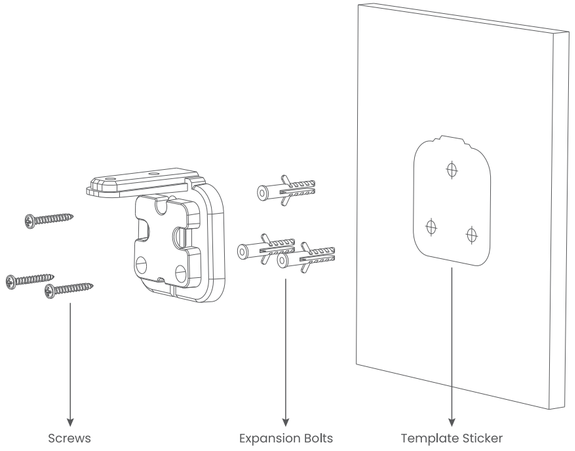

3. Reattach the camera to the wall mount.

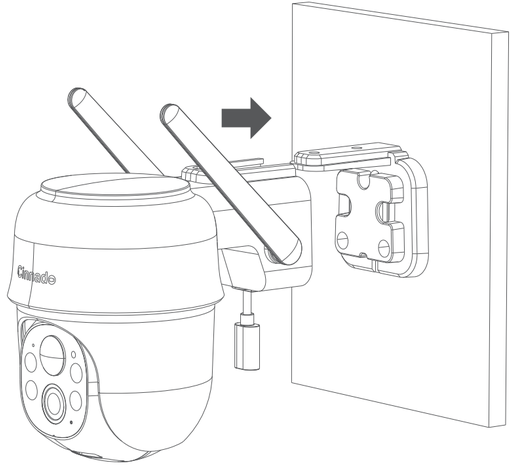

FAQ

Unable to connect the camera to Wi-Fi during setup?

If you are unable to connect the camera to Wi-Fi, please try the following solutions:
① Make sure your Wi-Fi meets the network requirements of the camera and check if the router supports 2.4GHz Wi-Fi.
② Make sure you have entered the correct Wi-Fi password.
③ Place your camera near the router to make sure that the Wi-Fi signal is strong enough.
④ Check if the indicator light is flashing red and blue alternately.
If the problem persists, please contact our customer service:
US CA support.us@cinnado.com UK support.uk@cinnado.com

The light is not flashing red and blue alternately?

If the light does not flash red and blue alternately, please try the following solutions:
① Make sure the camera is powered on.
② Press and hold the reset button for about 15 seconds to reset the camera.

Camera is offline?

① Check if the camera has enough power, please fully charge the camera with Type-C power cord.
② Make sure the router is working properly. Restart the router and the camera, then see if the camera reconnects automatically.
③ If not, reset the camera by holding the reset button for 15 seconds, then reconnect the camera.
④ Place the camera closer to the router to make sure the connection is strong enough.

Do I have to subscribe to the cloud plan?

The "Wansview Cloud" application is free to use. The cloud service is completely optional. Even if you don't want to subscribe, you can still use the camera normally.

After-service :
US CA support.us@cinnado.com
UK support.uk@cinnado.com
1-323-686-3288 (US only)

Made in China

FCC Caution

This device complies with part 15 of the FCC Rules. Operation is subject to the following two conditions:
(1) This device may not cause harmful interference, and
(2) this device must accept any interference received, including interference that may cause undesired operation.

Any Changes or modifications not expressly approved by the party responsible for compliance could void the user's authority to operate the equipment.

Note: This equipment has been tested and found to comply with the limits for a Class B digital device, pursuant to part 15 of the FCC Rules. These limits are designed to provide reasonable protection against harmful interference in a residential installation. This equipment generates uses and can radiate radio frequency energy and, if not installed and used in accordance with the instructions, may cause harmful interference to radio communications. However, there is no guarantee that interference will not occur in a particular installation. If this equipment does cause harmful interference to radio or television reception, which can be determined by turning the equipment off and on, the user is encouraged to try to correct the interference by one or more of the following measures:
-Reorient or relocate the receiving antenna.
-Increase the separation between the equipment and receiver.
-Connect the equipment into an outlet on a circuit different from that to which the receiver is connected.
-Consult the dealer or an experienced radio/TV technician for help.

This equipment complies with FCC radiation exposure limits set forth for an uncontrolled environment. This equipment should be installed and operated with minimum distance 20cm between the radiator & your body.