TEST REPORT

Product Name : Wireless IP Camera
Model Number : PD5, PA5, PW5, PS5
FCC ID : ZDEPD5

Prepared for : ShenZhen Foscam Intelligent Technology Co., Ltd.
Address : Room 902,Building 1B, Shenzhen International innovationValley, Xingke 1st Street, Nanshan District, Shenzhen,Guangdong, China, 518055.

Prepared by : EMTEK (DONGGUAN) Co., Ltd.
Address : -1&2/F.,Buiding 2,Zone A,Zhongda Marine Biotechnology Research and Development Base,N.9,Xincheng Avenue,Songshanhu High-technology Industrial Development Zone, Dongguan, Guangdong, China

TEL: +86-0769-22807078
FAX: +86-0769-22807079

Report Number : EDG2409270211E00402R
Date(s) of Tests : September 27, 2024 to November 23, 2024
Date of issue : November 23, 2024

1 TEST RESULT CERTIFICATION

Applicant	:	ShenZhen Foscam Intelligent Technology Co., Ltd.
Address	:	Room 902,Building 1B, Shenzhen International innovationValley, Xingke 1st Street, Nanshan District, Shenzhen,Guangdong, China, 518055.
Manufacturer	:	ShenZhen Foscam Intelligent Technology Co., Ltd.
Address	:	Room 902,Building 1B, Shenzhen International innovationValley, Xingke 1st Street, Nanshan District, Shenzhen,Guangdong, China, 518055.
Factory	:	ShenZhen Foscam Intelligent Technology Co., Ltd.
Address	:	701, 7th Floor, Building D, Guangming Port Intelligent Manufacturing Innovation Park, No. 8 Jinjun Road, Huangjiang Town, Dongguan, Guangdong, China, 523769
EUT	:	Wireless IP Camera
Model Name	:	PD5, PA5, PW5, PS5
Trademark	:	FOSCAM

Measurement Procedure Used:

APPLICABLE STANDARDS	
STANDARD	**TEST RESULT**
FCC 47 CFR Part 2, Subpart J FCC 47 CFR Part 15, Subpart E	**PASS**
IC RSS-GEN, Issue 5(04-2018)+A1(03-2019)+A2(02-2021) IC RSS-247 Issue 3(08-2023)	**PASS**

The above equipment was tested by EMTEK (DONGGUAN) Co., Ltd. The test data, data evaluation, test procedures, and equipment configurations shown in this report were made in accordance with the procedures given in ANSI C63.10 (2013) and the energy emitted by the sample EUT tested as described in this report is in compliance with the requirements of FCC Rules Part 2, Part 15.407, IC RSS-247 Issue 2 and IC RSS-GEN, Issue 5.

The test results of this report relate only to the tested sample identified in this report.

Date of Test : September 27, 2024 to November 23, 2024

Prepared by : Warren Deng

Warren Deng /Editor

Reviewer : Tim Dong

Tim Dong /Supervisor

Approve & Authorized Signer : Sam Lv / Manager

Modified History

Version	Report No.	Revision Date	Summary
V1.0	EDG2409270211E00402R	/	Original Report

TABLE OF CONTENTS

1 TEST RESULT CERTIFICATION 2

2 EUT TECHNICAL DESCRIPTION 5

3 SUMMARY OF TEST RESULT 6

4 TEST METHODOLOGY 7

4.1 GENERAL DESCRIPTION OF APPLIED STANDARDS 7
4.2 MEASUREMENT EQUIPMENT USED 7
4.3 DESCRIPTION OF TEST MODES 7

5 FACILITIES AND ACCREDITATIONS 10

5.1 FACILITIES 10
5.2 EQUIPMENT 10
5.3 LABORATORY ACCREDITATIONS AND LISTINGS 10

6 TEST SYSTEM UNCERTAINTY 11

7 SETUP OF EQUIPMENT UNDER TEST 12

7.1 RADIO FREQUENCY TEST SETUP 12
7.2 RADIO FREQUENCY TEST SETUP 12
7.3 CONDUCTED EMISSION TEST SETUP 14
7.4 BLOCK DIAGRAM CONFIGURATION OF TEST SYSTEM 15
7.5 SUPPORT EQUIPMENT 15

8 TEST REQUIREMENTS 16

8.1 BANDWIDTH MEASUREMENT 16
8.2 MAXIMUM CONDUCTED OUTPUT POWER 48
8.3 MAXIMUM PEAK POWER DENSITY 60
8.4 UNDESIRABLE RADIATED SPURIOUS EMISSION 72
8.5 POWER LINE CONDUCTED EMISSIONS 82
8.6 ANTENNA APPLICATION 85

2 EUT TECHNICAL DESCRIPTION

Characteristics	Description
Product:	Wireless IP Camera
Model Number:	PD5, PA5, PW5, PS5 (Note: The Model: PD5 is the same as the Model: PA5, PW5, PS5 in hardware aspect. The difference in model number serves as marketing strategy.)
Sample Number:	2#
Wifi Type:	Wifi 5G with 5725MHz-5850MHz Band
WLAN Supported:	802.11a/n/ac/ax
Data Rate :	802.11a: 54/48/36/24/18/12/9/6Mbps 802.11n: MCS0-MCS15 802.11ac: MCS0-MCS9 802.11ax: MCS0-MCS11
Modulation:	OFDM with BPSK/QPSK/16QAM/64QAM/256QAM/1024QAM for 802.11ax
Frequency Range:	UNII-3 with 5725MHz-5850MHz Band 5745-5825MHz for 802.11a/n(HT20)/ac(VHT20)/ax(HE20); 5755-5795MHz for 802.11n(HT40)/ac(VHT40)/ax(HE40);
TPC Function:	Not Applicable
Antenna Type:	External Antenna
Antenna Gain:	2.51 dBi
Transmit Power:	UNII-3 Band: 13.43 dBm(0.022029 W)
Power Supply :	DC 12V 1A from Adapter
Hardware version:	1.0
Date of Received:	September 27, 2024
Temperature Range:	0°C ~ +40°C

Note: *For more details, please refer to the User's manual of the EUT.*

3 SUMMARY OF TEST RESULT

FCC Part Clause	IC Part Clause	Test Parameter	Verdict	Remark
15.407 (a) 15.407 (e) 2.1049	RSS-247 6.2 RSS-Gen 6.7	99% , 6dB and 26dB Bandwidth	PASS	
15.407 (a)	RSS-247 6.2	Maximum Conducted Output Power	PASS	
15.407 (a)	RSS-247 6.2	Peak Power Spectral Density	PASS	
15.407 (b) 15.209 15.205	RSS-247 6.2 RSS-Gen 8.9 RSS-Gen 8.10 RSS-Gen 6.13	Radiated Spurious Emission	PASS	
15.207	RSS-Gen 8.8	Power Line Conducted Emission	PASS	
15.407(a) 15.203	RSS-Gen 6.8	Antenna Application	PASS	
NOTE1: N/A (Not Applicable) NOTE2: According to FCC OET KDB 789033, the report use radiated measurements in the restricted frequency bands. In addition, the radiated test is also performed to ensure the emissions emanating from the device cabinet also comply with the applicable limits.				

RELATED SUBMITTAL(S) / GRANT(S):

This submittal(s) (test report) is intended for **FCC ID: ZDEPD5** filing to comply with Section 15.407 of the FCC Part 15, Subpart E Rules.

4 TEST METHODOLOGY

4.1 GENERAL DESCRIPTION OF APPLIED STANDARDS

According to its specifications, the EUT must comply with the requirements of the following standards:
FCC 47 CFR Part 2, Subpart J
FCC 47 CFR Part 15, Subpart E
IC RSS-GEN, Issue 5(04-2018)+A1(03-2019)+A2(02-2021)
IC RSS-247 Issue 3(08-2023)
FCC KDB 662911 D01 Multiple Transmitter Output v02r01
FCC KDB 789033 D2 General UNII Test Procedures New Rules v02r01
MEASUREMENT EQUIPMENT USED**Conducted Emission Test Equipment**

Equipment	Manufacturer	Model No.	Serial No.	Last Cal.	Cal. Interval
EMI Test Receiver	Rohde&Schwarz	ESCI	100137	2024/4/29	1Year
Signal Analyzer	R&S	FSV30	103039	2024/4/28	1 Year
AMN	Rohde&Schwarz	ENV216	101209	2024/4/28	1Year
AMN	Rohde&Schwarz	ENV216	100017	2024/4/28	1Year
RF Switching Unit	CDS	RSU-M2	38401	2024/4/28	1Year
AMN	Schwarzbeck	NNLK8121	8121-641	2024/4/28	1Year
AMN	Rohde&Schwarz	ESH3-Z6	101101	2024/4/28	1Year
AMN	Rohde&Schwarz	ESH3-Z6	101102	2024/4/28	1Year
Power Splitters & Dividers	Weinschel Associates	WA1506A	A1066	2024/4/28	1Year
Current Probe	FCC	F-52	8377	2024/4/28	1Year
Passive voltage probe	Rohde&Schwarz	ESH2-Z3	100122	2024/4/28	1Year

For Spurious Emissions Test

Equipment	Manufacturer	Model No.	Serial No.	Last Cal.	Cal. Interval
EMI Test Receiver	Rohde&Schwarz	ESCI	101415	2024/4/28	1Year
Signal Analyzer	R&S	FSV30	103039	2024/4/28	1 Year
Bi-log Hybrid Antenna	Schwarzbeck	VULB9163	141	2024/5/5	1Year
Pre-Amplifie	HP	8447F	OPTH64	2024/4/28	1 Year
Signal Analyzer	R&S	FSV30	103039	2024/4/28	1 Year
Horn Antenna	Schwarzbeck	BBHA9120D	1272	2024/5/5	1Year
Horn Antenna	Schwarzbeck	BBHA9170	9170-567	2024/5/5	1Year
Pre-Amplifie	LUNAR EM	PM1-18-40	J10100000081	2024/4/28	1Year
Loop antenna	Schwarzbeck	FMZB1519	1519-012	2024/5/5	1Year

For other test items:

Equipment	Manufacturer	Model No.	Serial No.	Last Cal.	Cal. Interval
Wireless Connectivity Tester	R&S	CMW270	102543	2024/4/29	1Year
Automatic Control Unit	Tonscend	JS0806-2	21I8060480	2024/4/29	1Year
Signal Analyzer	KEYSIGHT	N9010B	MY60242456	2024/4/29	1Year
Analog Signal Generator	KEYSIGHT	N5173B	MY61252625	2024/4/29	1Year
UP/DOWN-Converter	R&S	CMW-Z800A	100274	2024/4/29	1Year
Vector Signal Generator	KEYSIGHT	N5182B	MY61252674	2024/4/29	1Year
Frequency Extender	KEYSIGHT	N5182BX07	MY59362541	2024/4/29	1Year
Temperature&Humidity test chamber	ESPEC	EL-02KA	12107166	2024/4/29	1 Year

Remark: *Each piece of equipment is scheduled for calibration once a year.*

4.2 DESCRIPTION OF TEST MODES

The EUT has been tested under its typical operating condition.
The EUT configuration for testing is installed on RF field strength measurement to meet the Commissions requirement and operating in a manner which intends to maximize its emission characteristics in a continuous normal application.
The Transmitter was operated in the normal operating mode. The TX frequency was fixed which was for the purpose of the measurements.
Test of channel included the lowest and middle and highest frequency to perform the test, then record on this report.
Those data rates (802.11a: 54 Mbps; 802.11n(HT20): MCS0; 802.11ac(VHT20): MCS0; 802.11ax(HE20): MCS0; 802.11n(HT40): MCS0; 802.11ac(VHT40): MCS0; 802.11ax(HE40): MCS0;) were used for all test.

Pre-defined engineering program for regulatory testing used to control the EUT for staying in continuous transmitting and receiving mode is programmed.

Wifi 5G with U-NII -3

Frequency and Channel list for 802.11a, 802.11n (HT20), 802.11ac (VHT20), 802.11ax (HE20):

Channel	Frequency (MHz)	Channel	Frequency (MHz)	Channel	Frequency (MHz)
149	5745	157	5785	165	5825
153	5765	161	5805		

Frequency and Channel list for 802.11n (HT40), 802.11ac (VHT40), 802.11ax (HE40):

Channel	Frequency (MHz)	Channel	Frequency (MHz)	Channel	Frequency (MHz)
151	5755	159	5795		

Test Frequency and Channel for 802.11a, 802.11n (HT20), 802.11ac (VHT20), 802.11ax (HE20):

Lowest Frequency		Middle Frequency		Highest Frequency	
Channel	Frequency (MHz)	Channel	Frequency (MHz)	Channel	Frequency (MHz)
149	5745	157	5785	165	5825

Test Frequency and channel for 802.11n (HT40), 802.11ac (VHT40), 802.11ax (HE40):

Lowest Frequency		Middle Frequency		Highest Frequency	
Channel	Frequency (MHz)	Channel	Frequency (MHz)	Channel	Frequency (MHz)
151	5755	N/A	N/A	159	5795

5 FACILITIES AND ACCREDITATIONS

5.1 FACILITIES

All measurement facilities used to collect the measurement data are located at:

EMTEK (DONGGUAN) Co., Ltd.

-1&2/F.,Buiding 2,Zone A,Zhongda Marine Biotechnology Research and Development Base,N.9,Xincheng Avenue,Songshanhu High-technology Industrial Development Zone, Dongguan, Guangdong, China

5.2 EQUIPMENT

Radiated emissions are measured with one or more of the following types of linearly polarized antennas: tuned dipole, biconical, log periodic, bi-log, and/or ridged waveguide, horn. Spectrum analyzers with preselectors and quasi-peak detectors are used to perform radiated measurements.

Conducted emissions are measured with Line Impedance Stabilization Networks and EMI Test Receivers.

Calibrated wideband preamplifiers, coaxial cables, and coaxial attenuators are also used for making measurements.

All receiving equipment conforms to CISPR Publication 16-1, “Radio Interference Measuring Apparatus and Measurement Methods.”

5.3 LABORATORY ACCREDITATIONS AND LISTINGS

Site Description		
EMC Lab.	:	Accredited by CNAS, 2024.07.06 The certificate is valid until 2030.07.05 The Laboratory has been assessed and proved to be in compliance with CNAS/CL01:2018 The Certificate Registration Number is L3150 Accredited by FCC Designation Number: CN1300 Test Firm Registration Number: 945551 Accredited by A2LA, April 05, 2021 The Certificate Registration Number is 4321.02 Accredited by Industry Canada The Certificate Registration Number is CN0109
Name of Firm	:	EMTEK (DONGGUAN) Co., Ltd.
Site Location	:	-1&2/F.,Building 2, Zone A, Zhongda Marine Biotechnology Research and Development Base, No.9, Xincheng Avenue, Songshanhu High-technology Industrial Development Zone, Dongguan, Guangdong, China

6 TEST SYSTEM UNCERTAINTY

The following measurement uncertainty levels have been estimated for tests performed on the apparatus:

Test Parameter	Measurement Uncertainty
Radio Frequency	±1x10^-5
Maximum Peak Output Power Test	±1.0dB
Conducted Emissions Test	±2.0dB
Radiated Emission Test	±2.0dB
Power Density	±2.0dB
Occupied Bandwidth Test	±1.0dB
Band Edge Test	±3dB
All emission, radiated	±3dB
Antenna Port Emission	±3dB
Temperature	±0.5℃
Humidity	±3%

Measurement Uncertainty for a level of Confidence of 95%

7 SETUP OF EQUIPMENT UNDER TEST

7.1 RADIO FREQUENCY TEST SETUP

The WLAN component's antenna ports(s) of the EUT are connected to the measurement instrument per an appropriate attenuator. The EUT is controlled by PC/software to emit the specified signals for the purpose of measurements.

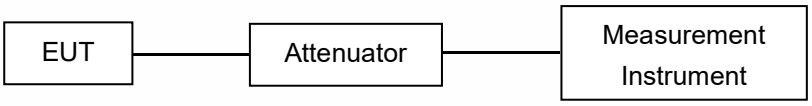

7.2 RADIO FREQUENCY TEST SETUP

The test site semi-anechoic chamber has met the requirement of NSA tolerance 4 dB according to the standards: ANSI C63.10. The test distance is 3m.The setup is according to the requirements in Section 13.1.4.1 of ANSI C63.10-2013 and CAN/CSA-CEI/IEC CISPR 22.

Below 30MHz：
The EUT is placed on a turntable 0.8 meters above the ground in the chamber, 3 meter away from the antenna (loop antenna). The Antenna should be positioned with its plane vertical at the specified distance from the EUT and rotated about its vertical axis for maximum response at each azimuth about the EUT. The center of the loop shall be 1 m above the ground. For certain applications, the loop antenna plane may also need to be positioned horizontally at the specified distance from the EUT.

Above 30MHz：
The EUT is placed on a turntable 0.8 meters above the ground in the chamber, 3 meter away from the antenna. The maximal emission value is acquired by adjusting the antenna height, polarisation and turntable azimuth. Normally, the height range of antenna is 1 m to 4 m, the azimuth range of turntable is 0° to 360°, and the receive antenna has two polarizations Vertical (V) and Horizontal (H).

Above 1GHz：
(Note: the FCC's permission to use 1.5m as an alternative per TCBC Conf call of Dec. 2, 2014.)
The EUT is placed on a turntable 1.5 meters above the ground in the chamber, 3 meter away from the antenna. The maximal emission value is acquired by adjusting the antenna height, polarisation and turntable azimuth. Normally, the height range of antenna is 1 m to 4 m, the azimuth range of turntable is 0° to 360°, and the receive antenna has two polarizations Vertical (V) and Horizontal (H).

(a) Radiated Emission Test Set-Up, Frequency Below 30MHz

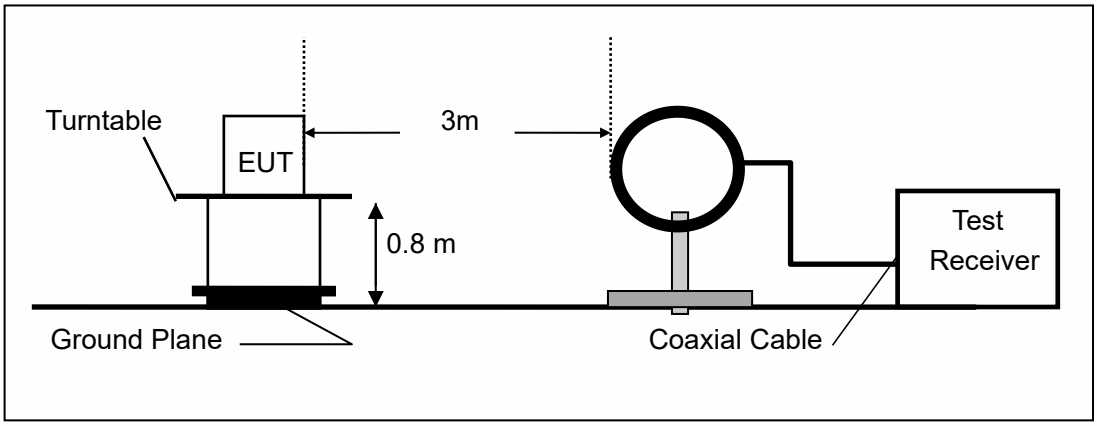

(b) Radiated Emission Test Set-Up, Frequency Below 1000MHz

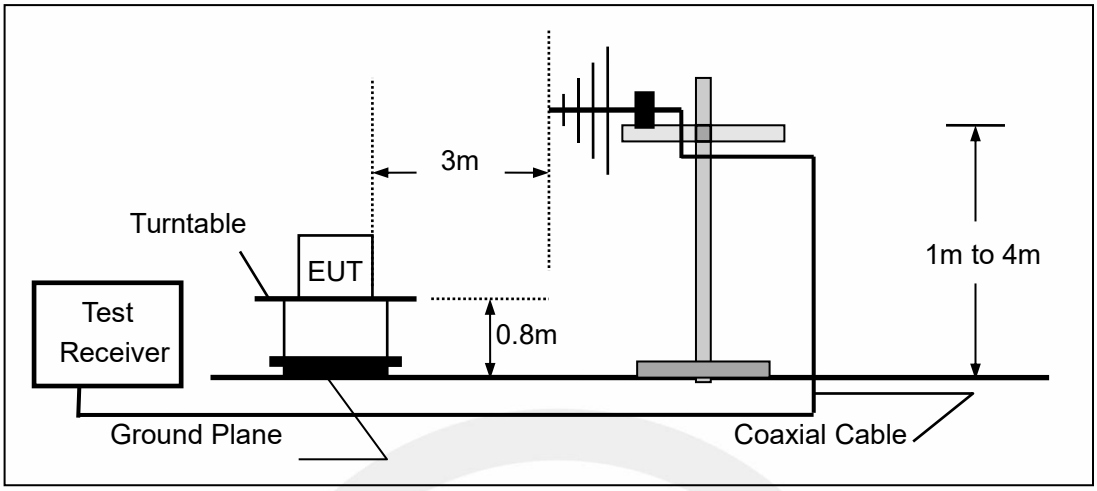

(c) Radiated Emission Test Set-Up, Frequency above 1000MHz

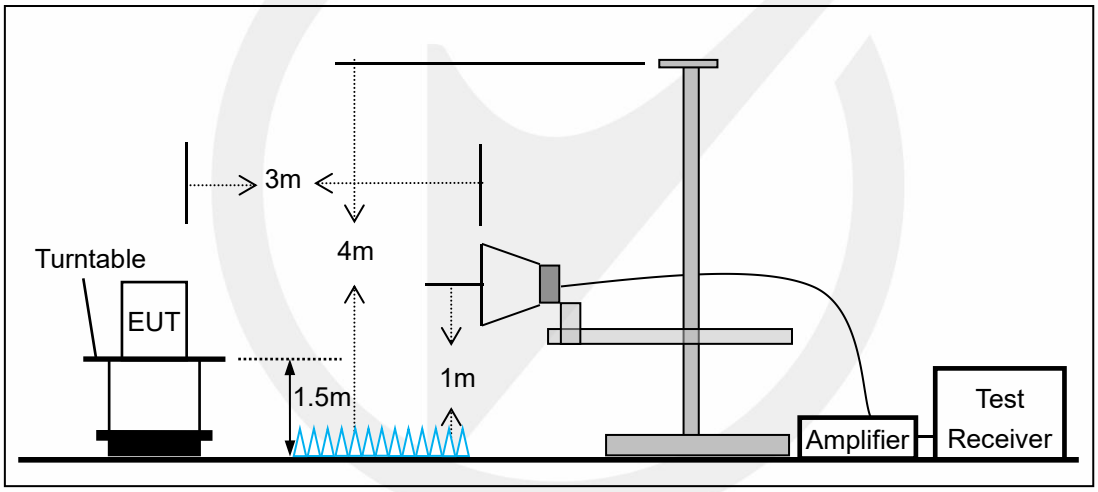

7.3 CONDUCTED EMISSION TEST SETUP

The mains cable of the EUT (maybe per AC/DC Adapter) must be connected to LISN. The LISN shall be placed 0.8 m from the boundary of EUT and bonded to a ground reference plane for LISN mounted on top of the ground reference plane. This distance is between the closest points of the LISN and the EUT. All other units of the EUT and associated equipment shall be at least 0.8m from the LISN.

Ground connections, where required for safety purposes, shall be connected to the reference ground point of the LISN and, where not otherwise provided or specified by the manufacturer, shall be of same length as the mains cable and run parallel to the mains connection at a separation distance of not more than 0.1 m.

According to the requirements in Section 13.1.4.1 of ANSI C63.10-2013 Conducted emissions from the EUT measured in the frequency range between 0.15 MHz and 30 MHz using CISPR Quasi-Peak and average detector mode.

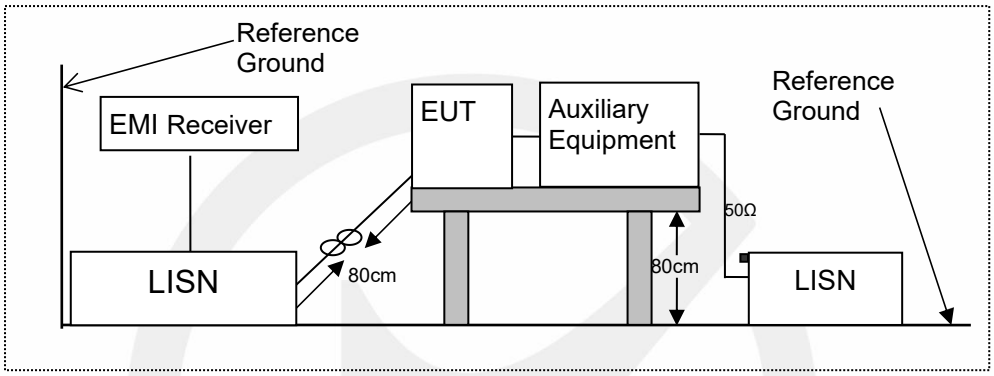

7.4 BLOCK DIAGRAM CONFIGURATION OF TEST SYSTEM

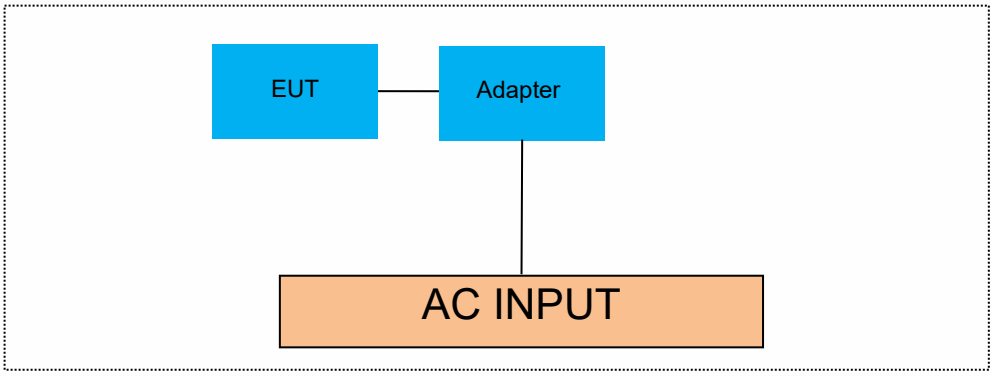

7.5 SUPPORT EQUIPMENT

Equipment List and Details			
Description	Manufacturer	Model	Serial Number
AC ADAPTER	ShenZhen Foscam Intelligent Technology Co., Ltd.	SAW15A-120-1000UD	/

Auxiliary Cable List and Details			
Cable Description	Length (m)	Shielded/Unshielded	With / Without Ferrite
/	/	/	/

Auxiliary Equipment List and Details			
Description	Manufacturer	Model	Serial Number
Notebook	Lenovo	E46L	11S168003748Z0LR06E0HG

Notes:

1. All the equipment/cables were placed in the worst-case configuration to maximize the emission during the test.

2. Grounding was established in accordance with the manufacturer's requirements and conditions for the intended use.

8 TEST REQUIREMENTS

8.1 BANDWIDTH MEASUREMENT

8.1.1 Applicable Standard

According to FCC Part 15.407(a)(1) for UNII Band I
According to FCC Part 15.407(a)(3) for UNII Band III
According to 789033 D02 Section II(C)
According to 789033 D02 Section II(D)
According to RSS-Gen 6.6, RSS 247 6.2

8.1.2 Conformance Limit

The 26dB bandwidth is used to determine the conducted power limits.
Within the 5.725-5.85 GHz band, the minimum 6 dB bandwidth of U-NII devices shall be at least 500 kHz.

8.1.3 Test Configuration

Test according to clause 7.1 radio frequency test setup

8.1.4 Test Procedure

According to 789033 D02 v02r01 section C&D, the following is the measurement procedure.

1. Emission Bandwidth (EBW)
a) Set RBW = approximately 1% of the emission bandwidth.
b) Set the VBW > RBW.
c) Detector = Peak.
d) Trace mode = max hold.
e) Measure the maximum width of the emission that is 26 dB down from the maximum of the emission. Compare this with the RBW setting of the analyzer. Readjust RBW and repeat measurement as needed until the RBW/EBW ratio is approximately 1%.

2. Minimum Emission Bandwidth for the band 5.725-5.85 GHz
Section 15.407(e) specifies the minimum 6 dB emission bandwidth of at least 500 KHz for the band 5.715-5.85 GHz. The following procedure shall be used for measuring this bandwidth:
a) Set RBW = 100 kHz.
b) Set the video bandwidth (VBW) ⩾ 3 × RBW.
c) Detector = Peak.
d) Trace mode = max hold.
e) Sweep = auto couple.
f) Allow the trace to stabilize.
g) Measure the maximum width of the emission that is constrained by the frequencies associated with the two outermost amplitude points (upper and lower frequencies) that are attenuated by 6 dB relative to the maximum level measured in the fundamental emission.
Note: The automatic bandwidth measurement capability of a spectrum analyzer or EMI receiver may be employed if it implements the functionality described above.

D. 99 Percent Occupied Bandwidth
The 99-percent occupied bandwidth is the frequency bandwidth such that, below its lower and above its upper frequency limits, the mean powers are each equal to 0.5 % of the total mean power of the given emission. Measurement of the 99-percent occupied bandwidth is required only as a condition for using the optional band-edge measurement techniques described in section II.G.3.d). Measurements of 99-percent occupied bandwidth may also optionally be used in lieu of the EBW to 789033 D02 v01r02 General UNII Test Procedures New Rules v01 define the minimum frequency range over which the spectrum is integrated when measuring maximum conducted output power as described in section II.E. However, the EBW must be measured to determine bandwidth dependent limits on maximum conducted output power in accordance with 15.407(a).

The following procedure shall be used for measuring (99 %) power bandwidth:
1. Set center frequency to the nominal EUT channel center frequency.
2. Set span = 1.5 times to 5.0 times the OBW.
3. Set RBW = 1 % to 5 % of the OBW
4. Set VBW ≥ 3 • RBW
5. Video averaging is not permitted. Where practical, a sample detection and single sweep mode shall be used. Otherwise, peak detection and max hold mode (until the trace stabilizes) shall be used.
6. Use the 99 % power bandwidth function of the instrument (if available).
7. If the instrument does not have a 99 % power bandwidth function, the trace data points are recovered and directly summed in power units. The recovered amplitude data points, beginning at the lowest frequency, are placed in a running sum until 0.5 % of the total is reached; that frequency is recorded as the lower frequency. The process is repeated until 99.5 % of the total is reached; that frequency is recorded as the upper frequency. The 99% occupied bandwidth is the difference between these two frequencies.

8.1.5 Test Results

Temperature:	25˚C
Relative Humidity:	45%
ATM Pressure:	1011 mbar

Note: N/A

TestMode	Antenna	Frequency[MHz]	26db EBW [MHz]	FL[MHz]	FH[MHz]	Limit[MHz]	Verdict
11A	Ant1	5745	26.920	5731.000	5757.920	---	---
11A	Ant1	5785	24.400	5772.880	5797.280	---	---
11A	Ant1	5825	24.040	5812.680	5836.720	---	---
11N20SISO	Ant1	5745	25.880	5732.320	5758.200	---	---
11N20SISO	Ant1	5785	25.560	5771.960	5797.520	---	---
11N20SISO	Ant1	5825	25.200	5812.040	5837.240	---	---
11N40SISO	Ant1	5755	46.400	5732.120	5778.520	---	---
11N40SISO	Ant1	5795	46.480	5771.960	5818.440	---	---
11AC20SISO	Ant1	5745	25.160	5732.640	5757.800	---	---
11AC20SISO	Ant1	5785	25.960	5772.400	5798.360	---	---
11AC20SISO	Ant1	5825	25.880	5811.960	5837.840	---	---
11AC40SISO	Ant1	5755	47.360	5731.160	5778.520	---	---
11AC40SISO	Ant1	5795	46.720	5771.800	5818.520	---	---
11AX20SISO	Ant1	5745	25.400	5732.800	5758.200	---	---
11AX20SISO	Ant1	5785	25.320	5771.760	5797.080	---	---
11AX20SISO	Ant1	5825	25.720	5812.040	5837.760	---	---
11AX40SISO	Ant1	5755	46.000	5731.880	5777.880	---	---
11AX40SISO	Ant1	5795	44.720	5772.680	5817.400	---	---

11A-Ant1-5745

11A-Ant1-5785

11A-Ant1-5825

11N20SISO-Ant1-5745

11N20SISO-Ant1-5785

11N20SISO-Ant1-5825

11N40SISO-Ant1-5755

11N40SISO-Ant1-5795

11AC20SISO-Ant1-5745

11AC20SISO-Ant1-5785

11AC20SISO-Ant1-5825

11AC40SISO-Ant1-5755

11AC40SISO-Ant1-5795

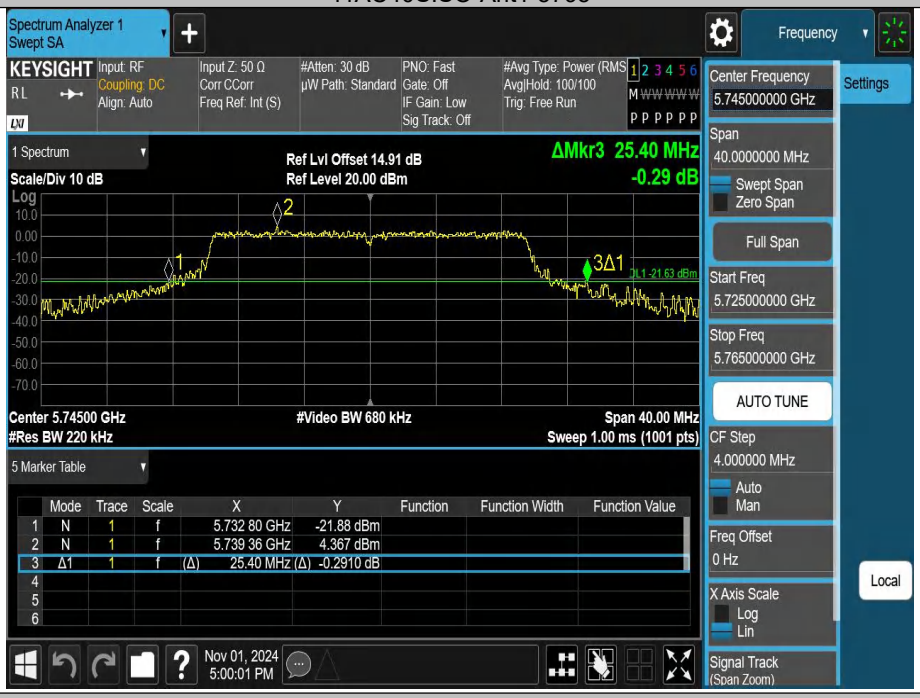

11AX20SISO-Ant1-5745

11AX20SISO-Ant1-5785

11AX20SISO-Ant1-5825

11AX40SISO-Ant1-5755

11AX40SISO-Ant1-5795

TestMode	Antenna	Frequency[MHz]	OCB [MHz]	FL[MHz]	FH[MHz]	Limit[MHz]	Verdict
11A	Ant1	5745	18.388	5735.6330	5754.0210	---	---
11A	Ant1	5785	18.071	5775.8575	5793.9285	---	---
11A	Ant1	5825	17.891	5815.9205	5833.8115	---	---
11N20SISO	Ant1	5745	19.001	5735.4521	5754.4531	---	---
11N20SISO	Ant1	5785	19.100	5775.3632	5794.4632	---	---
11N20SISO	Ant1	5825	18.962	5815.3950	5834.3570	---	---
11N40SISO	Ant1	5755	37.506	5736.2488	5773.7548	---	---
11N40SISO	Ant1	5795	37.708	5776.1248	5813.8328	---	---
11AC20SISO	Ant1	5745	18.982	5735.4796	5754.4616	---	---
11AC20SISO	Ant1	5785	19.096	5775.4230	5794.5190	---	---
11AC20SISO	Ant1	5825	18.935	5815.4417	5834.3767	---	---
11AC40SISO	Ant1	5755	37.613	5736.1479	5773.7609	---	---
11AC40SISO	Ant1	5795	37.700	5776.0666	5813.7666	---	---
11AX20SISO	Ant1	5745	19.663	5735.1334	5754.7964	---	---
11AX20SISO	Ant1	5785	19.731	5775.0856	5794.8166	---	---
11AX20SISO	Ant1	5825	19.712	5815.1478	5834.8598	---	---
11AX40SISO	Ant1	5755	38.556	5735.6518	5774.2078	---	---
11AX40SISO	Ant1	5795	38.572	5775.6894	5814.2614	---	---

11A-Ant1-5745

11A-Ant1-5785

11A-Ant1-5825

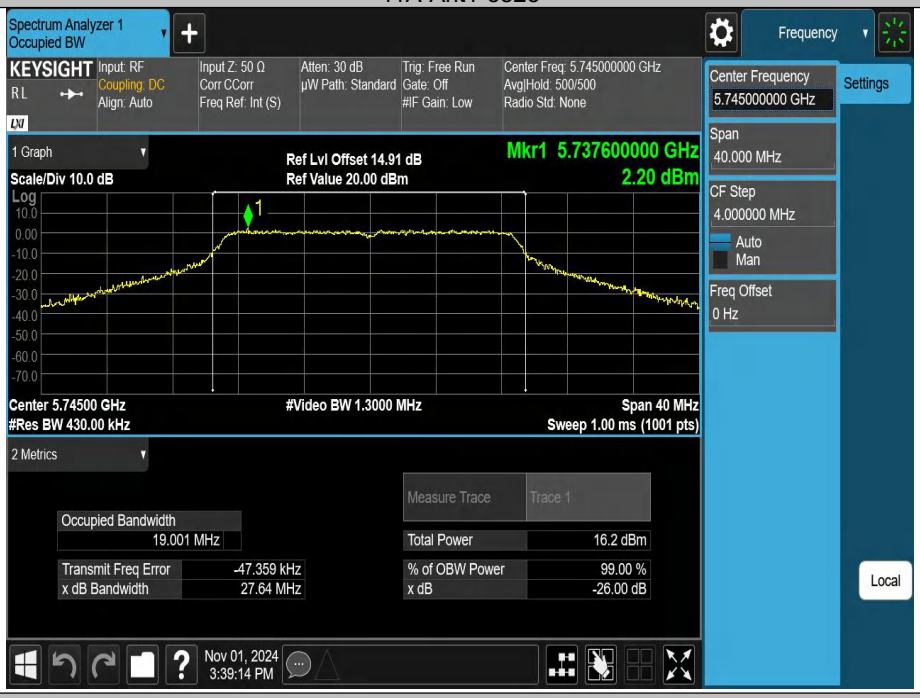

11N20SISO-Ant1-5745

11N20SISO-Ant1-5785

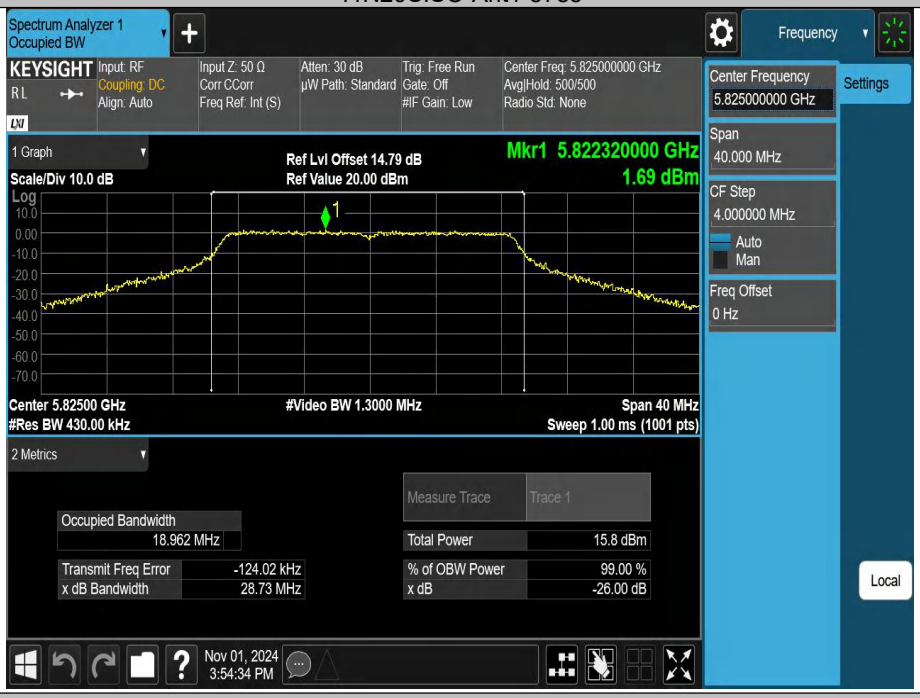

11N20SISO-Ant1-5825

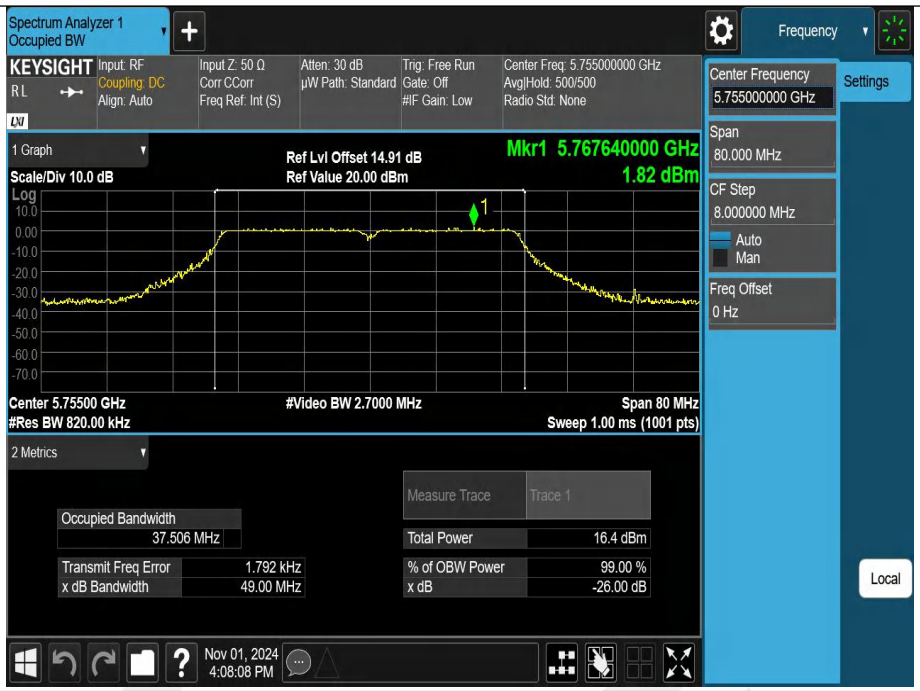

11N40SISO-Ant1-5755

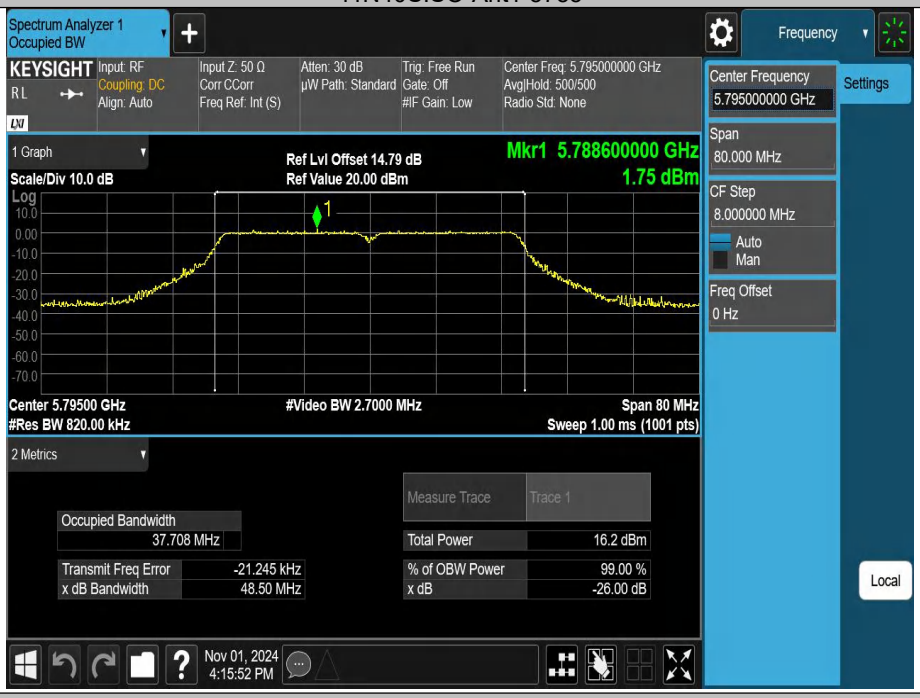

11N40SISO-Ant1-5795

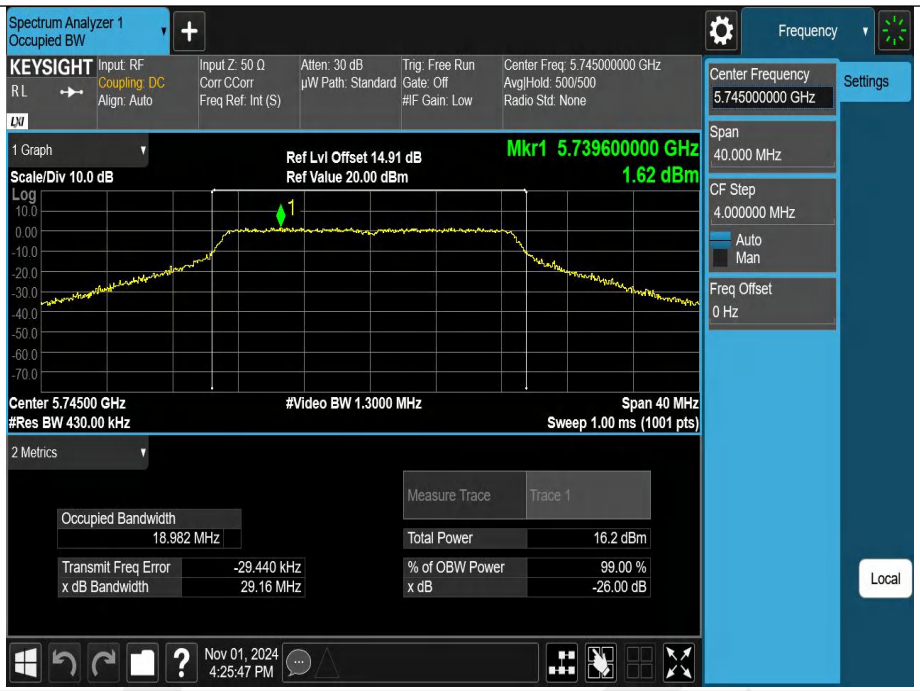

11AC20SISO-Ant1-5745

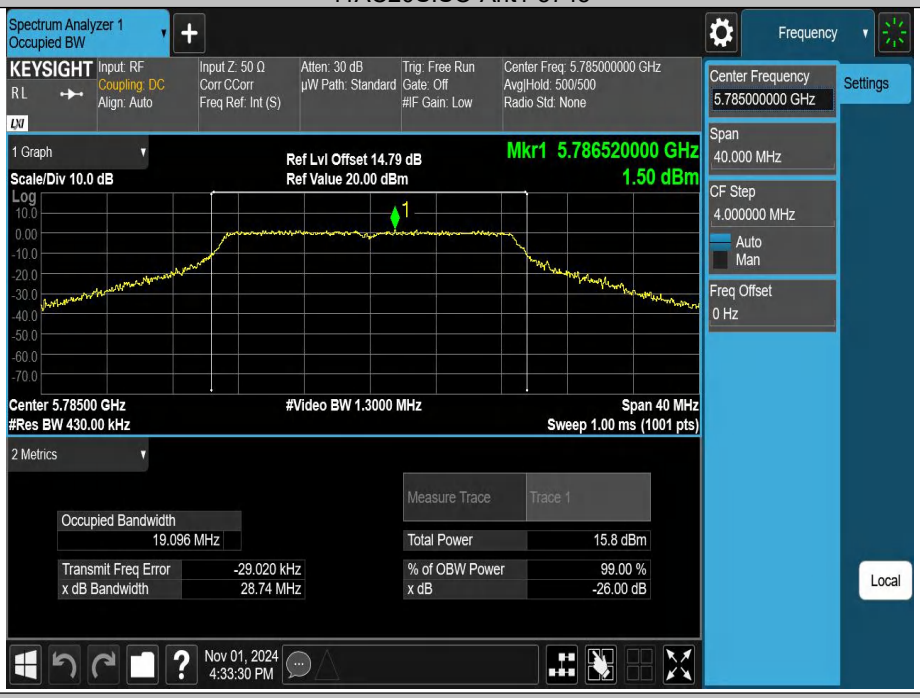

11AC20SISO-Ant1-5785

11AC20SISO-Ant1-5825

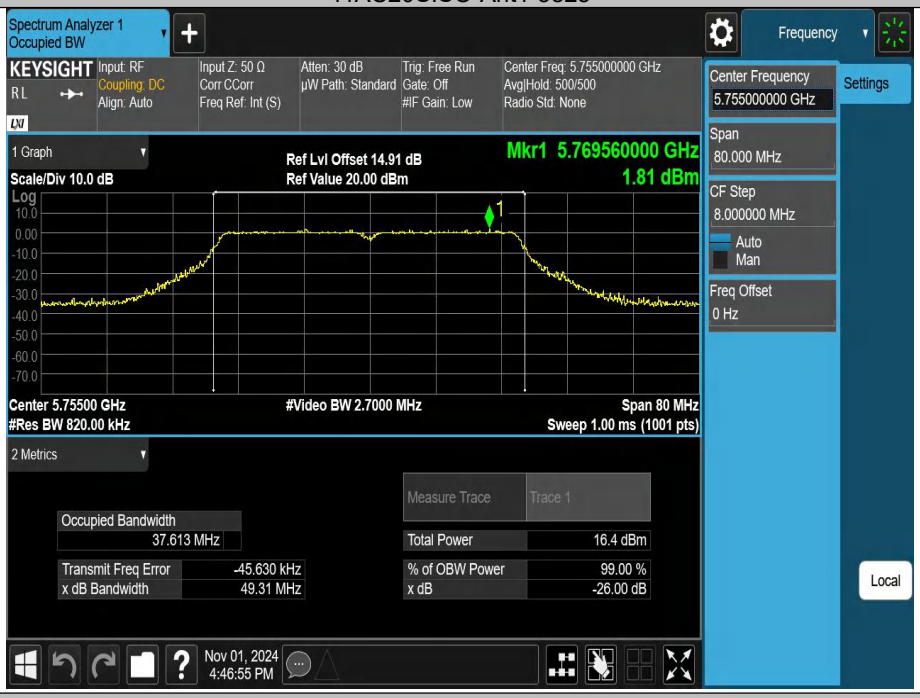

11AC40SISO-Ant1-5755

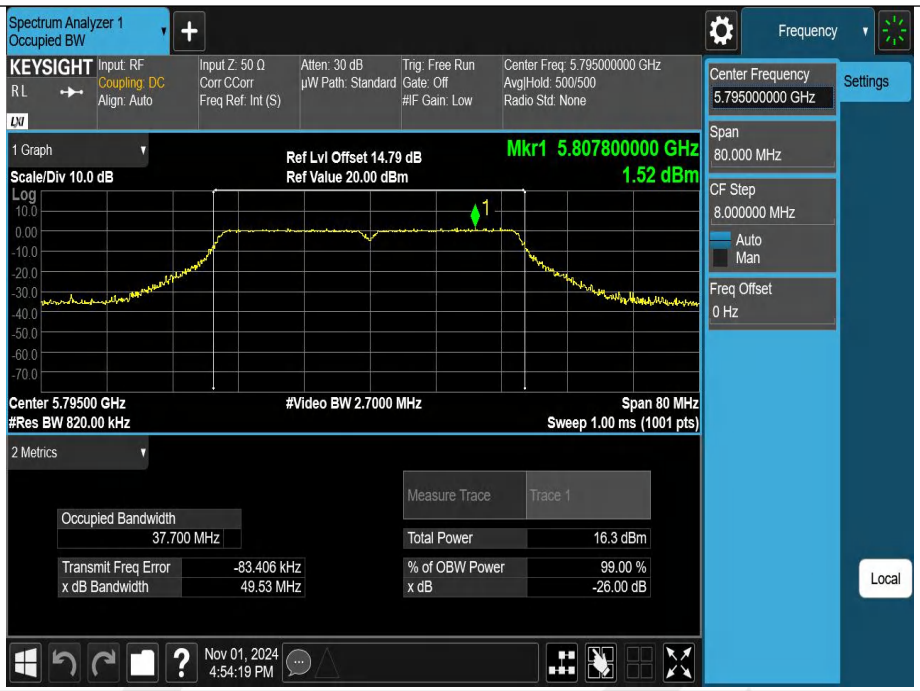

11AC40SISO-Ant1-5795

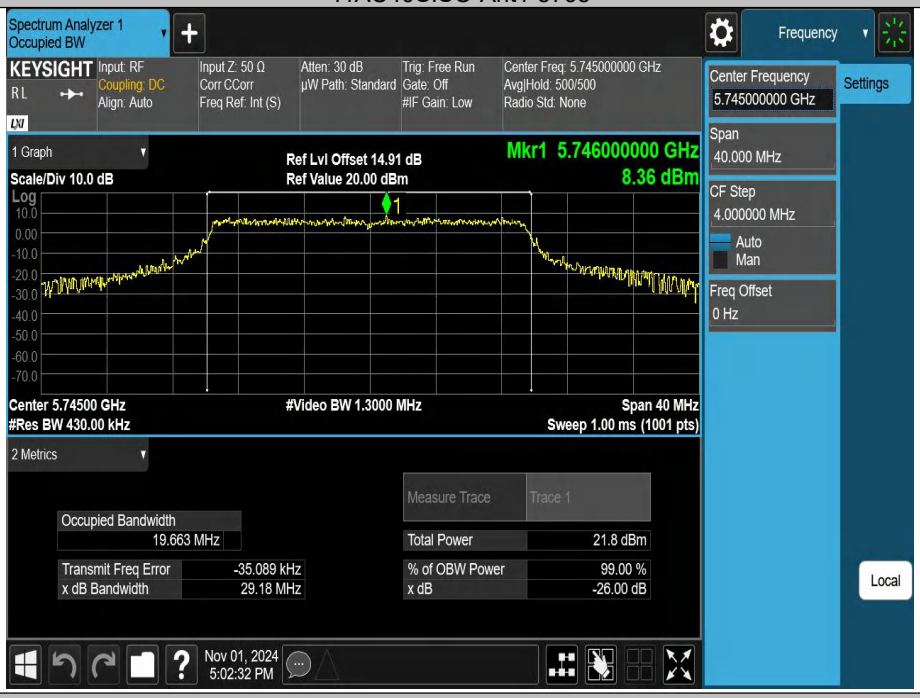

11AX20SISO-Ant1-5745

11AX20SISO-Ant1-5785

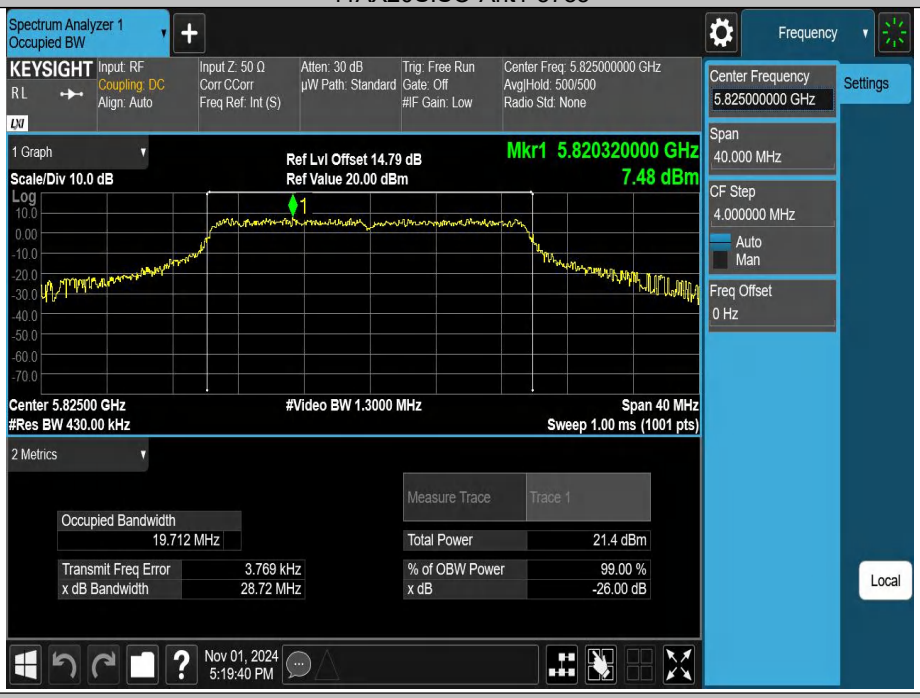

11AX20SISO-Ant1-5825

11AX40SISO-Ant1-5755

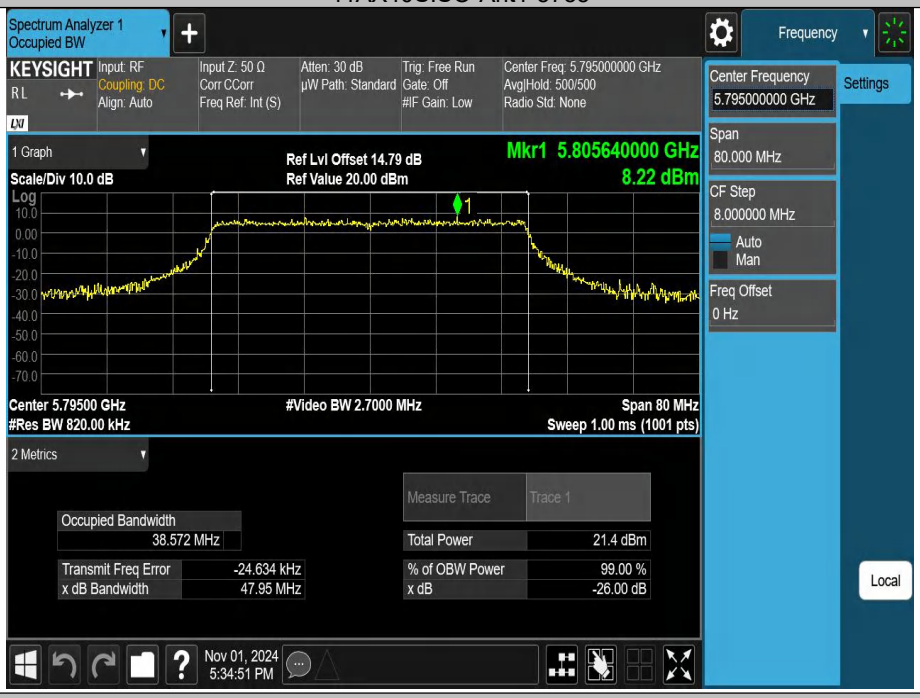

11AX40SISO-Ant1-5795

TestMode	Antenna	Frequency[MHz]	6db EBW [MHz]	FL[MHz]	FH[MHz]	Limit[MHz]	Verdict
11A	Ant1	5745	16.360	5736.800	5753.160	0.5	PASS
11A	Ant1	5785	16.320	5776.800	5793.120	0.5	PASS
11A	Ant1	5825	16.360	5816.800	5833.160	0.5	PASS
11N20SISO	Ant1	5745	17.600	5736.160	5753.760	0.5	PASS
11N20SISO	Ant1	5785	17.600	5776.160	5793.760	0.5	PASS
11N20SISO	Ant1	5825	17.600	5816.160	5833.760	0.5	PASS
11N40SISO	Ant1	5755	36.400	5736.760	5773.160	0.5	PASS
11N40SISO	Ant1	5795	36.400	5776.760	5813.160	0.5	PASS
11AC20SISO	Ant1	5745	17.600	5736.160	5753.760	0.5	PASS
11AC20SISO	Ant1	5785	17.600	5776.160	5793.760	0.5	PASS
11AC20SISO	Ant1	5825	17.600	5816.160	5833.760	0.5	PASS
11AC40SISO	Ant1	5755	36.240	5736.840	5773.080	0.5	PASS
11AC40SISO	Ant1	5795	36.320	5776.840	5813.160	0.5	PASS
11AX20SISO	Ant1	5745	18.800	5735.600	5754.400	0.5	PASS
11AX20SISO	Ant1	5785	19.040	5775.440	5794.480	0.5	PASS
11AX20SISO	Ant1	5825	18.960	5815.440	5834.400	0.5	PASS
11AX40SISO	Ant1	5755	37.680	5736.200	5773.880	0.5	PASS
11AX40SISO	Ant1	5795	37.920	5776.040	5813.960	0.5	PASS