TEST REPORT

Product Name : QHD 4.0MP Wi-Fi Camera
Model Number : R4M, R4S, R4C, R4P
FCC ID : ZDER4M

Prepared for : ShenZhen Foscam Intelligent Technology Co., Ltd
Address : Room 902,Building 1B, Shenzhen International innovationValley, Xingke 1st Street, Nanshan District, Shenzhen,Guangdong, China, 518055.

Prepared by : EMTEK (DONGGUAN) Co., Ltd.
Address : -1&2/F.,Buiding 2,Zone A,Zhongda Marine Biotechnology Research and Development Base,N.9,Xincheng Avenue,Songshanhu High-technology Industrial Development Zone, Dongguan, Guangdong, China

TEL: +86-0769-22807078
FAX: +86-0769-22807079

Report Number : EDG2406070166E00302R
Date(s) of Tests : June 07, 2024 to August 30, 2024
Date of issue : August 30, 2024

1 TEST RESULT CERTIFICATION

Applicant	:	ShenZhen Foscam Intelligent Technology Co., Ltd
Address	:	Room 902,Building 1B, Shenzhen International innovationValley, Xingke 1st Street, Nanshan District, Shenzhen,Guangdong, China, 518055.
Manufacturer	:	ShenZhen Foscam Intelligent Technology Co., Ltd
Address	:	Room 902,Building 1B, Shenzhen International innovationValley, Xingke 1st Street, Nanshan District, Shenzhen,Guangdong, China, 518055.
Factory	:	ShenZhen Foscam Intelligent Technology Co., Ltd
Address	:	701, 7th Floor, Building D, Guangming Port Intelligent Manufacturing Innovation Park, No. 8 Jinjun Road, Huangjiang Town, Dongguan, Guangdong, China,
EUT	:	QHD 4.0MP Wi-Fi Camera
Model Name	:	R4M, R4S, R4C, R4P
Trademark	:	FOSCAM

Measurement Procedure Used:

APPLICABLE STANDARDS	
STANDARD	**TEST RESULT**
FCC 47 CFR Part 2, Subpart J FCC 47 CFR Part 15, Subpart E	**PASS**
IC RSS-GEN, Issue 5(04-2018)+A1(03-2019)+A2(02-2021) IC RSS-247 Issue 3(08-2023)	**PASS**

The above equipment was tested by EMTEK (DONGGUAN) Co., Ltd. The test data, data evaluation, test procedures, and equipment configurations shown in this report were made in accordance with the procedures given in ANSI C63.10 (2013) and the energy emitted by the sample EUT tested as described in this report is in compliance with the requirements of FCC Rules Part 2, Part 15.407, IC RSS-247 Issue 2 and IC RSS-GEN, Issue 5.

The test results of this report relate only to the tested sample identified in this report.

Date of Test : June 07, 2024 to August 30, 2024

Prepared by : Warren Deng

Warren Deng /Editor

Reviewer : Tim Dong

Tim Dong /Supervisor

Approve & Authorized Signer : Sam Lv / Manager

Modified History

Version	Report No.	Revision Date	Summary
V1.0	EDG2406070166E00302R	/	Original Report

TABLE OF CONTENTS

1 TEST RESULT CERTIFICATION 2

2 EUT TECHNICAL DESCRIPTION 5

3 SUMMARY OF TEST RESULT 6

4 TEST METHODOLOGY 7

4.1 GENERAL DESCRIPTION OF APPLIED STANDARDS 7
4.2 DESCRIPTION OF TEST MODES 8

5 FACILITIES AND ACCREDITATIONS 10

5.1 FACILITIES 10
5.2 EQUIPMENT 10
5.3 LABORATORY ACCREDITATIONS AND LISTINGS 10

6 TEST SYSTEM UNCERTAINTY 11

7 SETUP OF EQUIPMENT UNDER TEST 12

7.1 RADIO FREQUENCY TEST SETUP 12
7.2 RADIO FREQUENCY TEST SETUP 12
7.3 CONDUCTED EMISSION TEST SETUP 14
7.4 BLOCK DIAGRAM CONFIGURATION OF TEST SYSTEM 15
7.5 SUPPORT EQUIPMENT 15

8 TEST REQUIREMENTS 16

8.1 BANDWIDTH MEASUREMENT 16
8.2 MAXIMUM CONDUCTED OUTPUT POWER 33
8.3 MAXIMUM PEAK POWER DENSITY 40
8.4 UNDESIRABLE RADIATED SPURIOUS EMISSION 47
8.5 POWER LINE CONDUCTED EMISSIONS 57
8.6 ANTENNA APPLICATION 60

2 EUT TECHNICAL DESCRIPTION

Characteristics	Description
Product:	QHD 4.0MP Wi-Fi Camera
Model Number:	R4M, R4S, R4C, R4P (The Model: R4M is the same as the Model: R4S, R4C, R4P in hardware aspect. The difference in model number serves as marketing strategy.)
Sample Number:	2#
Wifi Type:	Wifi 5G with 5725MHz-5850MHz Band
WLAN Supported:	802.11a/n
Data Rate :	802.11a: 54/48/36/24/18/12/9/6Mbps 802.11n: MCS0-MCS15
Modulation:	OFDM with BPSK/QPSK/16QAM/64QAM for 802.11a/n
Frequency Range:	UNII-3 with 5725MHz-5850MHz Band 5745-5825MHz for 802.11a/n(HT20); 5755-5795MHz for 802.11n(HT40);
TPC Function:	Not Applicable
Antenna Type:	FPC Antenna
Antenna Gain:	2.07 dBi
Transmit Power:	UNII-3 Band: 12.78 dBm(0.018967 W)
Power Supply :	DC 5V 1.5A from Adapter
Hardware version :	5.0
Date of Received:	June 07, 2024
Temperature Range:	0°C ~ +40°C

Note: *For more details, please refer to the User's manual of the EUT.*

3 SUMMARY OF TEST RESULT

FCC Part Clause	IC Part Clause	Test Parameter	Verdict	Remark
15.407 (a) 15.407 (e) 2.1049	RSS-247 6.2 RSS-Gen 6.7	99% , 6dB and 26dB Bandwidth	PASS	
15.407 (a)	RSS-247 6.2	Maximum Conducted Output Power	PASS	
15.407 (a)	RSS-247 6.2	Peak Power Spectral Density	PASS	
15.407 (b) 15.209 15.205	RSS-247 6.2 RSS-Gen 8.9 RSS-Gen 8.10 RSS-Gen 6.13	Radiated Spurious Emission	PASS	
15.207	RSS-Gen 8.8	Power Line Conducted Emission	PASS	
15.407(a) 15.203	RSS-Gen 6.8	Antenna Application	PASS	
NOTE1: N/A (Not Applicable) NOTE2: According to FCC OET KDB 789033, the report use radiated measurements in the restricted frequency bands. In addition, the radiated test is also performed to ensure the emissions emanating from the device cabinet also comply with the applicable limits.				

RELATED SUBMITTAL(S) / GRANT(S):

This submittal(s) (test report) is intended for **FCC ID: ZDER4M** filing to comply with Section 15.407 of the FCC Part 15, Subpart E Rules.

4 TEST METHODOLOGY

4.1 GENERAL DESCRIPTION OF APPLIED STANDARDS

According to its specifications, the EUT must comply with the requirements of the following standards:
FCC 47 CFR Part 2, Subpart J
FCC 47 CFR Part 15, Subpart E
IC RSS-GEN, Issue 5(04-2018)+A1(03-2019)+A2(02-2021)
IC RSS-247 Issue 3(08-2023)
FCC KDB 662911 D01 Multiple Transmitter Output v02r01
FCC KDB 789033 D2 General UNII Test Procedures New Rules v02r01
MEASUREMENT EQUIPMENT USED

Conducted Emission Test Equipment

Equipment	Manufacturer	Model No.	Serial No.	Last Cal.	Cal. Interval
EMI Test Receiver	Rohde&Schwarz	ESCI	100137	2024/4/29	1Year
Signal Analyzer	R&S	FSV30	103039	2024/4/28	1 Year
AMN	Rohde&Schwarz	ENV216	101209	2024/4/28	1Year
AMN	Rohde&Schwarz	ENV216	100017	2024/4/28	1Year
RF Switching Unit	CDS	RSU-M2	38401	2024/4/28	1Year
AMN	Schwarzbeck	NNLK8121	8121-641	2024/4/28	1Year
AMN	Rohde&Schwarz	ESH3-Z6	101101	2024/4/28	1Year
AMN	Rohde&Schwarz	ESH3-Z6	101102	2024/4/28	1Year
Power Splitters & Dividers	Weinschel Associates	WA1506A	A1066	2024/4/28	1Year
Current Probe	FCC	F-52	8377	2024/4/28	1Year
Passive voltage probe	Rohde&Schwarz	ESH2-Z3	100122	2024/4/28	1Year

For Spurious Emissions Test

Equipment	Manufacturer	Model No.	Serial No.	Last Cal.	Cal. Interval
EMI Test Receiver	Rohde&Schwarz	ESCI	101415	2024/4/28	1Year
Signal Analyzer	R&S	FSV30	103039	2024/4/28	1 Year
Bi-log Hybrid Antenna	Schwarzbeck	VULB9163	141	2024/5/5	1Year
Pre-Amplifie	HP	8447F	OPTH64	2024/4/28	1 Year
Signal Analyzer	R&S	FSV30	103039	2024/4/28	1 Year
Horn Antenna	Schwarzbeck	BBHA9120D	1272	2024/5/5	1Year
Horn Antenna	Schwarzbeck	BBHA9170	9170-567	2024/5/5	1Year
Pre-Amplifie	LUNAR EM	PM1-18-40	J10100000081	2024/4/28	1Year
Loop antenna	Schwarzbeck	FMZB1519	1519-012	2024/5/5	1Year

For other test items:

Equipment	Manufacturer	Model No.	Serial No.	Last Cal.	Cal. Interval
Wireless Connectivity Tester	R&S	CMW270	102543	2024/4/29	1Year
Automatic Control Unit	Tonscend	JS0806-2	21I8060480	2024/4/29	1Year
Signal Analyzer	KEYSIGHT	N9010B	MY60242456	2024/4/29	1Year
Analog Signal Generator	KEYSIGHT	N5173B	MY61252625	2024/4/29	1Year
UP/DOWN-Converter	R&S	CMW-Z800A	100274	2024/4/29	1Year
Vector Signal Generator	KEYSIGHT	N5182B	MY61252674	2024/4/29	1Year
Frequency Extender	KEYSIGHT	N5182BX07	MY59362541	2024/4/29	1Year
Temperature&Humidity test chamber	ESPEC	EL-02KA	12107166	2024/4/29	1 Year

Remark: *Each piece of equipment is scheduled for calibration once a year.*

4.2 DESCRIPTION OF TEST MODES

The EUT has been tested under its typical operating condition.
The EUT configuration for testing is installed on RF field strength measurement to meet the Commissions requirement and operating in a manner which intends to maximize its emission characteristics in a continuous normal application.
The Transmitter was operated in the normal operating mode. The TX frequency was fixed which was for the purpose of the measurements.
Test of channel included the lowest and middle and highest frequency to perform the test, then record on this report.
Those data rates (802.11a: 54 Mbps; 802.11n(HT20): MCS0; 802.11ac(VHT20): MCS0; 802.11n(HT40): MCS0; 802.11ac(VHT40): MCS0; 802.11ac(VHT80): MCS0;) were used for all test.

Pre-defined engineering program for regulatory testing used to control the EUT for staying in continuous transmitting and receiving mode is programmed.

Wifi 5G with U-NII -3

Frequency and Channel list for 802.11a, 802.11n (HT20), 802.11ac (VHT20):

Channel	Frequency (MHz)	Channel	Frequency (MHz)	Channel	Frequency (MHz)
149	5745	157	5785	165	5825
153	5765	161	5805		

Frequency and Channel list for 802.11n (HT40), 802.11ac (VHT40):

Channel	Frequency (MHz)	Channel	Frequency (MHz)	Channel	Frequency (MHz)
151	5755	159	5795		

Frequency and Channel list for 802.11ac(VHT80) :

Channel	Frequency (MHz)	Channel	Frequency (MHz)	Channel	Frequency (MHz)
155	5775				

Test Frequency and Channel for 802.11a, 802.11n (HT20), 802.11ac (VHT20):

Lowest Frequency		Middle Frequency		Highest Frequency	
Channel	Frequency (MHz)	Channel	Frequency (MHz)	Channel	Frequency (MHz)
149	5745	157	5785	165	5825

Test Frequency and channel for 802.11n (HT40):

Lowest Frequency		Middle Frequency		Highest Frequency	
Channel	Frequency (MHz)	Channel	Frequency (MHz)	Channel	Frequency (MHz)
151	5755	N/A	N/A	159	5795

Test Frequency and channel for 802.11ac(VHT80):

Lowest Frequency		Middle Frequency		Highest Frequency	
Channel	Frequency (MHz)	Channel	Frequency (MHz)	Channel	Frequency (MHz)
155	5775				

Multi-antenna correlation:

☐	Transmit Signals are Correlated
	Directional gain = 10 log[($10^{G1/20}$ + $10^{G2/20}$ + … + $10^{GN/20}$)2 /N_{ANT}] dBi
☐	All Transmit Signals are Completely Uncorrelated
	Directional gain = 10 log[($10^{G1/10}$ + $10^{G2/10}$ + … + $10^{GN/10}$)/N_{ANT}] dBi

5 FACILITIES AND ACCREDITATIONS

5.1 FACILITIES

All measurement facilities used to collect the measurement data are located at:

EMTEK (DONGGUAN) Co., Ltd.

-1&2/F.,Buiding 2,Zone A,Zhongda Marine Biotechnology Research and Development Base,N.9,Xincheng Avenue,Songshanhu High-technology Industrial Development Zone, Dongguan, Guangdong, China

5.2 EQUIPMENT

Radiated emissions are measured with one or more of the following types of linearly polarized antennas: tuned dipole, biconical, log periodic, bi-log, and/or ridged waveguide, horn. Spectrum analyzers with preselectors and quasi-peak detectors are used to perform radiated measurements.

Conducted emissions are measured with Line Impedance Stabilization Networks and EMI Test Receivers.

Calibrated wideband preamplifiers, coaxial cables, and coaxial attenuators are also used for making measurements.

All receiving equipment conforms to CISPR Publication 16-1, “Radio Interference Measuring Apparatus and Measurement Methods.”

5.3 LABORATORY ACCREDITATIONS AND LISTINGS

Site Description		
EMC Lab.	:	Accredited by CNAS, 2024.07.06 The certificate is valid until 2030.07.05 The Laboratory has been assessed and proved to be in compliance with CNAS/CL01:2018 The Certificate Registration Number is L3150 Accredited by FCC Designation Number: CN1300 Test Firm Registration Number: 945551 Accredited by A2LA, April 05, 2021 The Certificate Registration Number is 4321.02 Accredited by Industry Canada The Certificate Registration Number is CN0109
Name of Firm	:	EMTEK (DONGGUAN) Co., Ltd.
Site Location	:	-1&2/F.,Building 2, Zone A, Zhongda Marine Biotechnology Research and Development Base, No.9, Xincheng Avenue, Songshanhu High-technology Industrial Development Zone, Dongguan, Guangdong, China

6 TEST SYSTEM UNCERTAINTY

The following measurement uncertainty levels have been estimated for tests performed on the apparatus:

Test Parameter	Measurement Uncertainty
Radio Frequency	±1x10^-5
Maximum Peak Output Power Test	±1.0dB
Conducted Emissions Test	±2.0dB
Radiated Emission Test	±2.0dB
Power Density	±2.0dB
Occupied Bandwidth Test	±1.0dB
Band Edge Test	±3dB
All emission, radiated	±3dB
Antenna Port Emission	±3dB
Temperature	±0.5℃
Humidity	±3%

Measurement Uncertainty for a level of Confidence of 95%

7 SETUP OF EQUIPMENT UNDER TEST

7.1 RADIO FREQUENCY TEST SETUP

The WLAN component's antenna ports(s) of the EUT are connected to the measurement instrument per an appropriate attenuator. The EUT is controlled by PC/software to emit the specified signals for the purpose of measurements.

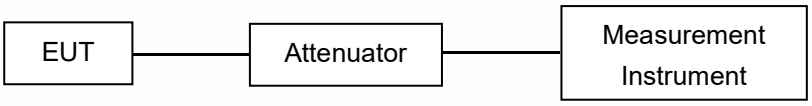

7.2 RADIO FREQUENCY TEST SETUP

The test site semi-anechoic chamber has met the requirement of NSA tolerance 4 dB according to the standards: ANSI C63.10. The test distance is 3m.The setup is according to the requirements in Section 13.1.4.1 of ANSI C63.10-2013 and CAN/CSA-CEI/IEC CISPR 22.

Below 30MHz：
The EUT is placed on a turntable 0.8 meters above the ground in the chamber, 3 meter away from the antenna (loop antenna). The Antenna should be positioned with its plane vertical at the specified distance from the EUT and rotated about its vertical axis for maximum response at each azimuth about the EUT. The center of the loop shall be 1 m above the ground. For certain applications, the loop antenna plane may also need to be positioned horizontally at the specified distance from the EUT.

Above 30MHz：
The EUT is placed on a turntable 0.8 meters above the ground in the chamber, 3 meter away from the antenna. The maximal emission value is acquired by adjusting the antenna height, polarisation and turntable azimuth. Normally, the height range of antenna is 1 m to 4 m, the azimuth range of turntable is 0° to 360°, and the receive antenna has two polarizations Vertical (V) and Horizontal (H).

Above 1GHz：
(Note: the FCC's permission to use 1.5m as an alternative per TCBC Conf call of Dec. 2, 2014.)
The EUT is placed on a turntable 1.5 meters above the ground in the chamber, 3 meter away from the antenna. The maximal emission value is acquired by adjusting the antenna height, polarisation and turntable azimuth. Normally, the height range of antenna is 1 m to 4 m, the azimuth range of turntable is 0° to 360°, and the receive antenna has two polarizations Vertical (V) and Horizontal (H).

(a) Radiated Emission Test Set-Up, Frequency Below 30MHz

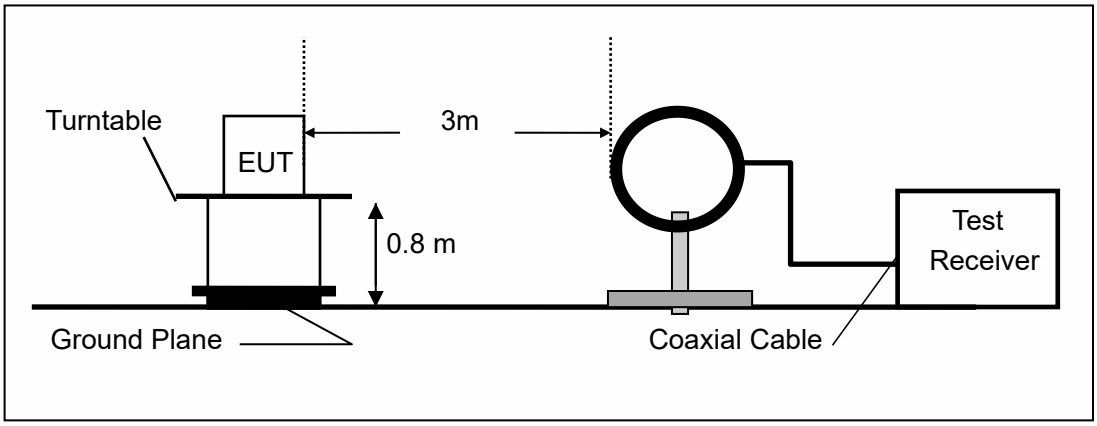

(b) Radiated Emission Test Set-Up, Frequency Below 1000MHz

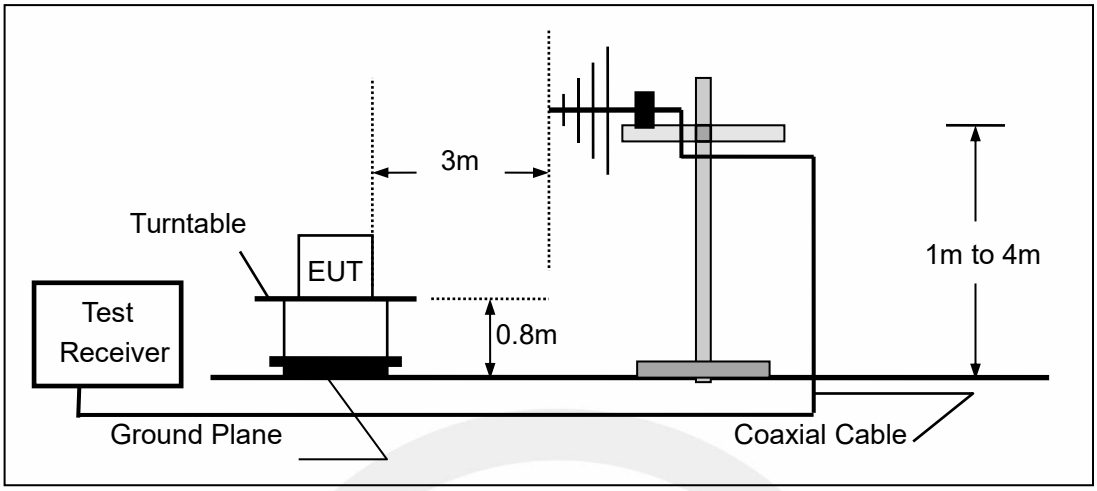

(c) Radiated Emission Test Set-Up, Frequency above 1000MHz

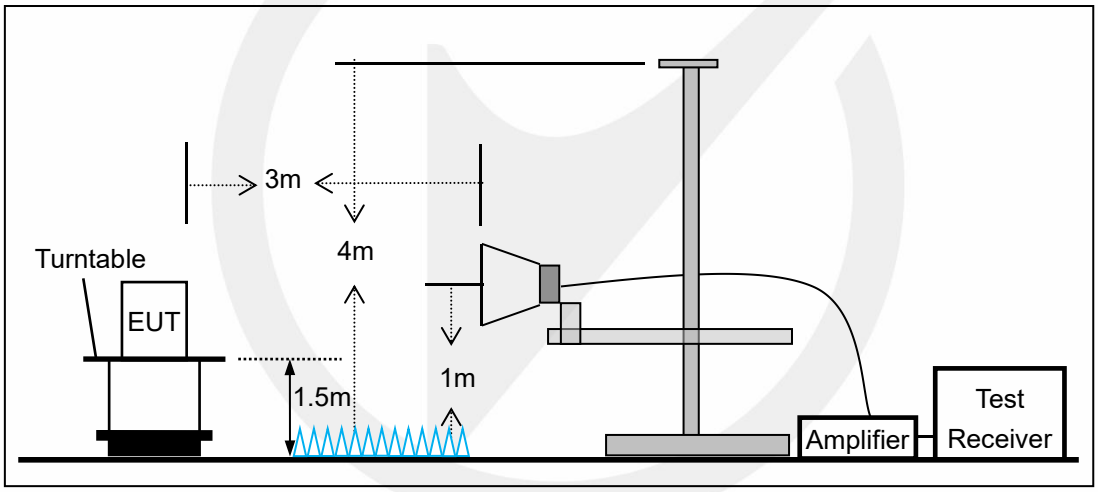

7.3 CONDUCTED EMISSION TEST SETUP

The mains cable of the EUT (maybe per AC/DC Adapter) must be connected to LISN. The LISN shall be placed 0.8 m from the boundary of EUT and bonded to a ground reference plane for LISN mounted on top of the ground reference plane. This distance is between the closest points of the LISN and the EUT. All other units of the EUT and associated equipment shall be at least 0.8m from the LISN.

Ground connections, where required for safety purposes, shall be connected to the reference ground point of the LISN and, where not otherwise provided or specified by the manufacturer, shall be of same length as the mains cable and run parallel to the mains connection at a separation distance of not more than 0.1 m.

According to the requirements in Section 13.1.4.1 of ANSI C63.10-2013 Conducted emissions from the EUT measured in the frequency range between 0.15 MHz and 30 MHz using CISPR Quasi-Peak and average detector mode.

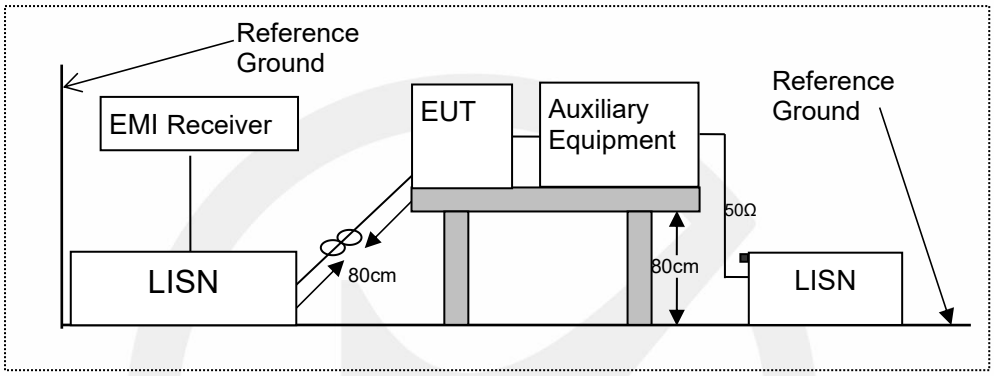

7.4 BLOCK DIAGRAM CONFIGURATION OF TEST SYSTEM

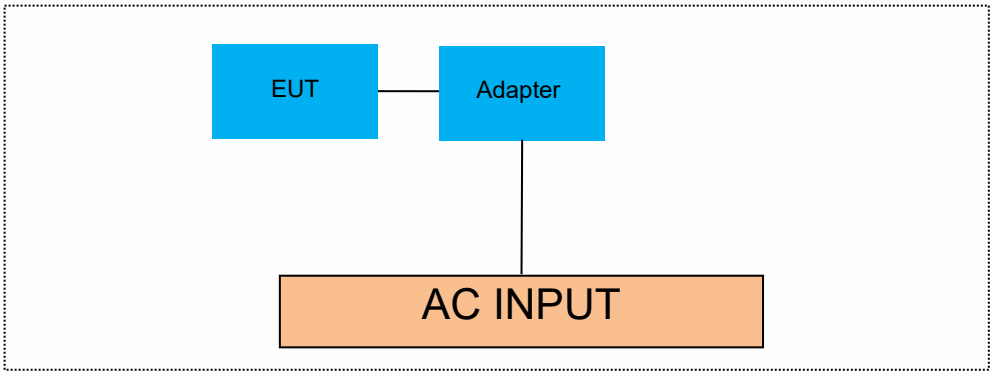

7.5 SUPPORT EQUIPMENT

Equipment List and Details			
Description	Manufacturer	Model	Serial Number
AC ADAPTER	Shenzhen ShiAn Power Technology Co.Ltd.	SA0101-0501500UA	/

Auxiliary Cable List and Details			
Cable Description	Length (m)	Shielded/Unshielded	With / Without Ferrite
/	/	/	/

Auxiliary Equipment List and Details			
Description	Manufacturer	Model	Serial Number
Notebook	Lenovo	E46L	11S168003748Z0LR06E0HG

Notes:

1. All the equipment/cables were placed in the worst-case configuration to maximize the emission during the test.

2. Grounding was established in accordance with the manufacturer's requirements and conditions for the intended use.

8 TEST REQUIREMENTS

8.1 BANDWIDTH MEASUREMENT

8.1.1 Applicable Standard

According to FCC Part 15.407(a)(1) for UNII Band I
According to FCC Part 15.407(a)(3) for UNII Band III
According to 789033 D02 Section II(C)
According to 789033 D02 Section II(D)
According to RSS-Gen 6.6, RSS 247 6.2

8.1.2 Conformance Limit

The 26dB bandwidth is used to determine the conducted power limits.
Within the 5.725-5.85 GHz band, the minimum 6 dB bandwidth of U-NII devices shall be at least 500 kHz.

8.1.3 Test Configuration

Test according to clause 7.1 radio frequency test setup

8.1.4 Test Procedure

According to 789033 D02 v02r01 section C&D, the following is the measurement procedure.

1. Emission Bandwidth (EBW)
a) Set RBW = approximately 1% of the emission bandwidth.
b) Set the VBW > RBW.
c) Detector = Peak.
d) Trace mode = max hold.
e) Measure the maximum width of the emission that is 26 dB down from the maximum of the emission. Compare this with the RBW setting of the analyzer. Readjust RBW and repeat measurement as needed until the RBW/EBW ratio is approximately 1%.

2. Minimum Emission Bandwidth for the band 5.725-5.85 GHz
Section 15.407(e) specifies the minimum 6 dB emission bandwidth of at least 500 KHz for the band 5.715-5.85 GHz. The following procedure shall be used for measuring this bandwidth:
a) Set RBW = 100 kHz.
b) Set the video bandwidth (VBW) ⩾ 3 × RBW.
c) Detector = Peak.
d) Trace mode = max hold.
e) Sweep = auto couple.
f) Allow the trace to stabilize.
g) Measure the maximum width of the emission that is constrained by the frequencies associated with the two outermost amplitude points (upper and lower frequencies) that are attenuated by 6 dB relative to the maximum level measured in the fundamental emission.
Note: The automatic bandwidth measurement capability of a spectrum analyzer or EMI receiver may be employed if it implements the functionality described above.

D. 99 Percent Occupied Bandwidth
The 99-percent occupied bandwidth is the frequency bandwidth such that, below its lower and above its upper frequency limits, the mean powers are each equal to 0.5 % of the total mean power of the given emission. Measurement of the 99-percent occupied bandwidth is required only as a condition for using the optional band-edge measurement techniques described in section II.G.3.d). Measurements of 99-percent occupied bandwidth may also optionally be used in lieu of the EBW to 789033 D02 v01r02 General UNII Test Procedures New Rules v01 define the minimum frequency range over which the spectrum is integrated when measuring maximum conducted output power as described in section II.E. However, the EBW must be measured to determine bandwidth dependent limits on maximum conducted output power in accordance with 15.407(a).

The following procedure shall be used for measuring (99 %) power bandwidth:
1. Set center frequency to the nominal EUT channel center frequency.
2. Set span = 1.5 times to 5.0 times the OBW.
3. Set RBW = 1 % to 5 % of the OBW
4. Set VBW ≥ 3 • RBW
5. Video averaging is not permitted. Where practical, a sample detection and single sweep mode shall be used. Otherwise, peak detection and max hold mode (until the trace stabilizes) shall be used.
6. Use the 99 % power bandwidth function of the instrument (if available).
7. If the instrument does not have a 99 % power bandwidth function, the trace data points are recovered and directly summed in power units. The recovered amplitude data points, beginning at the lowest frequency, are placed in a running sum until 0.5 % of the total is reached; that frequency is recorded as the lower frequency. The process is repeated until 99.5 % of the total is reached; that frequency is recorded as the upper frequency. The 99% occupied bandwidth is the difference between these two frequencies.

8.1.5 Test Results

Temperature:	25˚C
Relative Humidity:	45%
ATM Pressure:	1011 mbar

Note: N/A

TestMode	Antenna	Frequency[MHz]	26db EBW [MHz]	FL[MHz]	FH[MHz]	Limit[MHz]	Verdict
11A	Ant1	5745	19.320	5735.280	5754.600	---	---
11A	Ant1	5785	19.240	5775.400	5794.640	---	---
11A	Ant1	5825	19.040	5815.480	5834.520	---	---
11N20SISO	Ant1	5745	19.680	5734.960	5754.640	---	---
11N20SISO	Ant1	5785	19.960	5774.720	5794.680	---	---
11N20SISO	Ant1	5825	19.720	5815.120	5834.840	---	---
11N40SISO	Ant1	5755	37.920	5735.880	5773.800	---	---
11N40SISO	Ant1	5795	38.000	5775.880	5813.880	---	---

11A-Ant1-5745

11A-Ant1-5785

11A-Ant1-5825

11N20SISO-Ant1-5745

11N20SISO-Ant1-5785

11N20SISO-Ant1-5825

11N40SISO-Ant1-5755

11N40SISO-Ant1-5795

TestMode	Antenna	Frequency[MHz]	OCB [MHz]	FL[MHz]	FH[MHz]	Limit[MHz]	Verdict
11A	Ant1	5745	16.463	5736.7035	5753.1665	---	---
11A	Ant1	5785	16.476	5776.7134	5793.1894	---	---
11A	Ant1	5825	16.459	5816.7512	5833.2102	---	---
11N20SISO	Ant1	5745	17.514	5736.1500	5753.6640	---	---
11N20SISO	Ant1	5785	17.557	5776.1426	5793.6996	---	---
11N20SISO	Ant1	5825	17.538	5816.1852	5833.7232	---	---
11N40SISO	Ant1	5755	35.241	5737.1372	5772.3782	---	---
11N40SISO	Ant1	5795	35.301	5777.2677	5812.5687	---	---

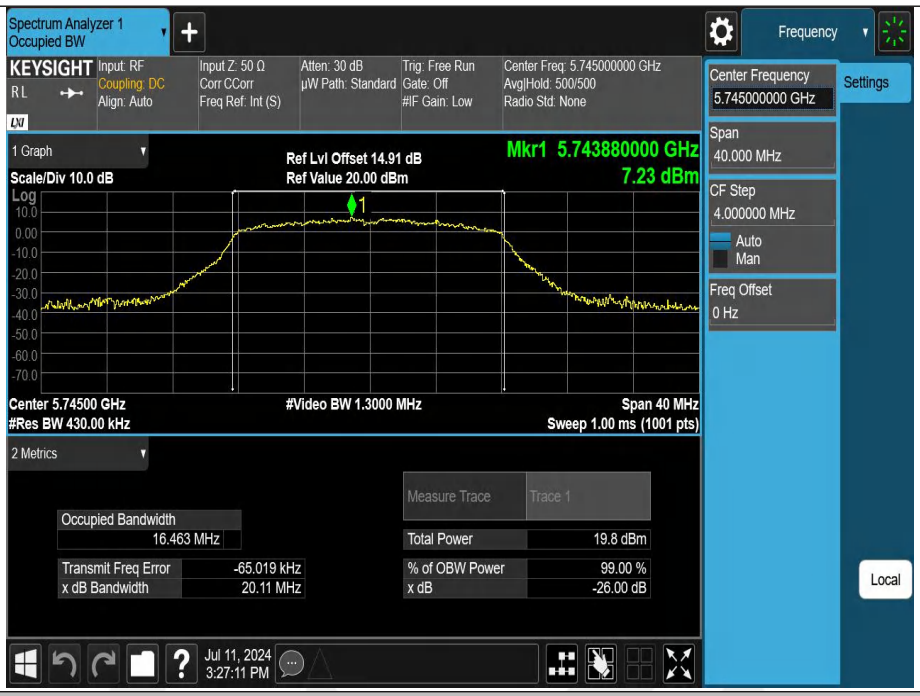

11A-Ant1-5745

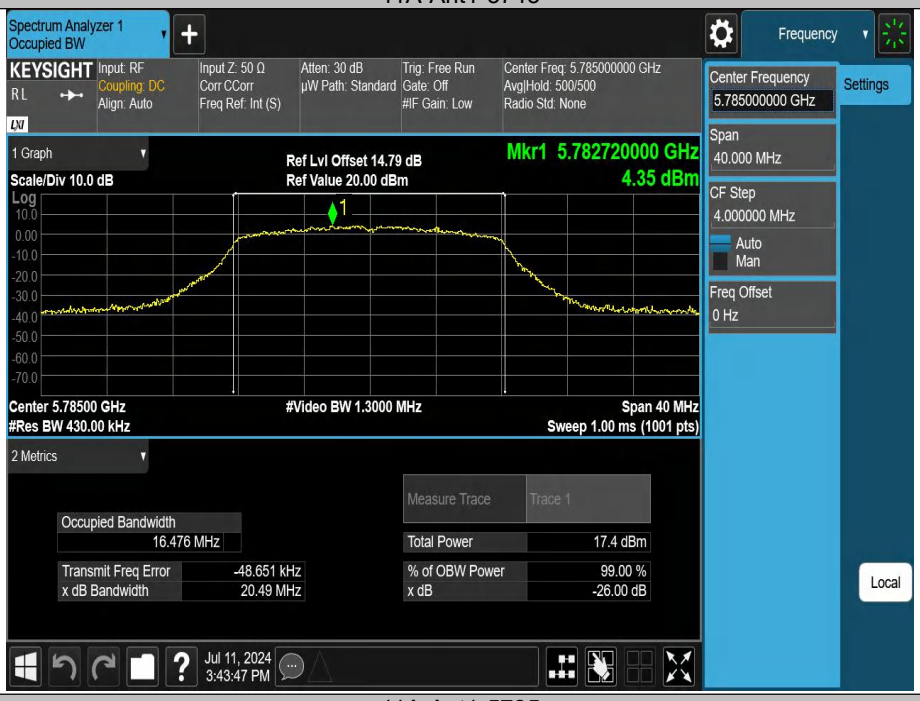

11A-Ant1-5785

11A-Ant1-5825

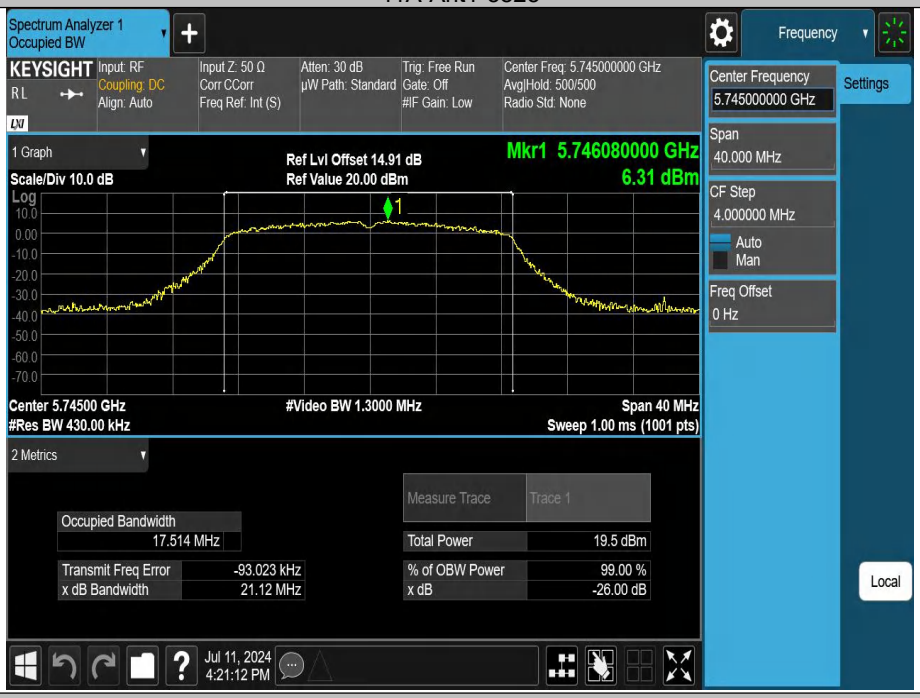

11N20SISO-Ant1-5745

11N20SISO-Ant1-5785

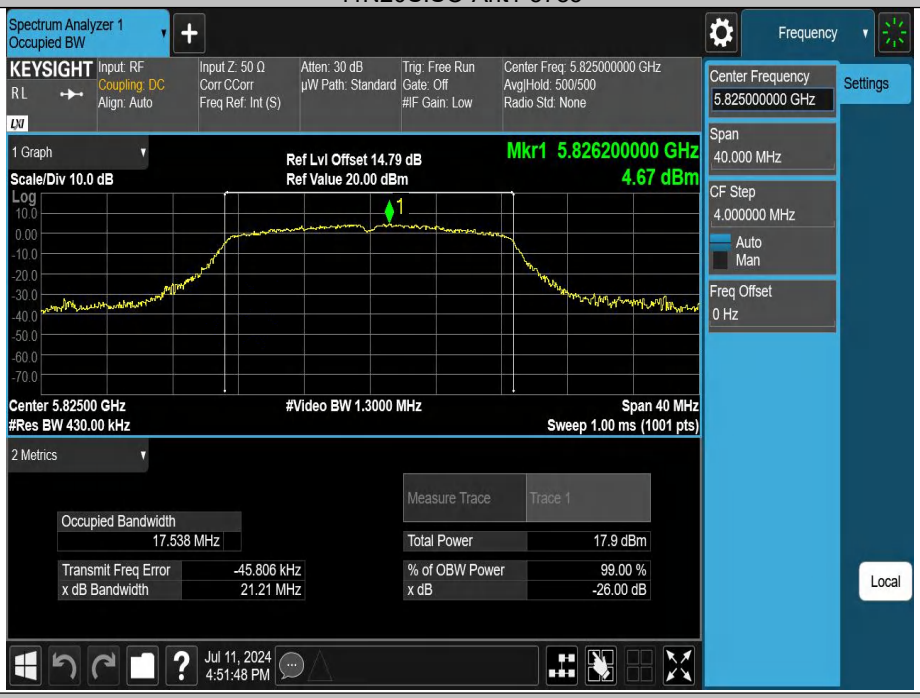

11N20SISO-Ant1-5825

11N40SISO-Ant1-5755

11N40SISO-Ant1-5795

TestMode	Antenna	Frequency[MHz]	6db EBW [MHz]	FL[MHz]	FH[MHz]	Limit[MHz]	Verdict
11A	Ant1	5745	14.400	5737.200	5751.600	0.5	PASS
11A	Ant1	5785	15.040	5777.440	5792.480	0.5	PASS
11A	Ant1	5825	13.840	5818.640	5832.480	0.5	PASS
11N20SISO	Ant1	5745	15.440	5737.040	5752.480	0.5	PASS
11N20SISO	Ant1	5785	15.080	5777.400	5792.480	0.5	PASS
11N20SISO	Ant1	5825	14.400	5818.320	5832.720	0.5	PASS
11N40SISO	Ant1	5755	30.000	5738.680	5768.680	0.5	PASS
11N40SISO	Ant1	5795	31.280	5778.680	5809.960	0.5	PASS

11A-Ant1-5745-PASS

11A-Ant1-5785-PASS

11A-Ant1-5825-PASS

11N20SISO-Ant1-5745-PASS

11N20SISO-Ant1-5785-PASS

11N20SISO-Ant1-5825-PASS

11N40SISO-Ant1-5755-PASS

11N40SISO-Ant1-5795-PASS

8.2 MAXIMUM CONDUCTED OUTPUT POWER

8.2.1 Applicable Standard

According to FCC Part 15.407(a)(1) for UNII Band I
According to FCC Part 15.407(a)(2) for UNII Band II-A and UNII Band II-C
According to FCC Part 15.407(a)(3) for UNII Band III
According to 789033 D02 Section II(E)
According to RSS 247 6.2

8.2.2 Conformance Limit

FCC Limit:

■ For the band 5.15-5.25 GHz

(a) (1) (i) For an outdoor access point, the maximum conducted output power over the frequency band of operation shall not exceed 1 W provided the maximum antenna gain does not exceed 6 dBi. If transmitting antennas of directional gain greater than 6 dBi are used, the maximum conducted output power shall be reduced by the amount in dB that the directional gain of the antenna exceeds 6 dBi. The maximum e.i.r.p. at any elevation angle above 30 degrees as measured from the horizon must not exceed 125 mW (21 dBm).

(a) (1) (ii) For an indoor access point, the maximum conducted output power over the frequency band of operation shall not exceed 1 W provided the maximum antenna gain does not exceed 6 dBi. If transmitting antennas of directional gain greater than 6 dBi are used, the maximum conducted output power shall be reduced by the amount in dB that the directional gain of the antenna exceeds 6 dBi.

(a) (1) (iii) For fixed point-to-point access points, the maximum conducted output power over the frequency band of operation shall not exceed 1 W. Fixed point-to-point U-NII devices may employ antennas with directional gain up to 23 dBi without any corresponding reduction in the maximum conducted output power. For fixed point-to-point transmitters that employ a directional antenna gain greater than 23 dBi, a 1 dB reduction in maximum conducted output power is required for each 1 dB of antenna gain in excess of 23 dBi. Fixed, point-to-point operations exclude the use of point-to-multipoint systems, omnidirectional applications, and multiple collocated transmitters transmitting the same information. The operator of the U-NII device, or if the equipment is professionally installed, the installer, is responsible for ensuring that systems employing high gain directional antennas are used exclusively for fixed, point-to-point operations.

(a) (1) (iv) For client devices, the maximum conducted output power over the frequency band of operation shall not exceed 250 mW provided the maximum antenna gain does not exceed 6 dBi. If transmitting antennas of directional gain greater than 6 dBi are used, the maximum conducted output power shall be reduced by the amount in dB that the directional gain of the antenna exceeds 6 dBi.

■ For the 5.25-5.35 GHz and 5.47-5.725 GHz bands

(a) (2) The maximum conducted output power over the frequency bands of operation shall not exceed the lesser of 250 mW or 11 dBm + 10 log B, where B is the 26 dB emission bandwidth in megahertz. If transmitting antennas of directional gain greater than 6 dBi are used, the maximum conducted output power shall be reduced by the amount in dB that the directional gain of the antenna exceeds 6 dBi.

■ For the band 5.725-5.85 GHz

(a) (3) The maximum conducted output power over the frequency band of operation shall not exceed 1 W. If transmitting antennas of directional gain greater than 6 dBi are used, the maximum conducted output power shall be reduced by the amount in dB that the directional gain of the antenna exceeds 6 dBi. However, fixed point-to-point U-NII devices operating in this band may employ transmitting antennas with directional gain greater than 6 dBi without any corresponding reduction in transmitter conducted power. Fixed, point-to-point operations exclude the use of point-to-multipoint systems, omnidirectional applications, and multiple collocated transmitters transmitting the same information. The operator of the U-NII device, or if the equipment is professionally installed, the installer, is responsible for ensuring that systems employing high gain directional antennas are used exclusively for fixed, point-to-point operations

IC Limit:

■ Frequency band 5150-5250 MHz

The maximum e.i.r.p. shall not exceed 200 mW or 10 + 10 $\log_{10}$B, dBm, whichever power is less. B is the 99% emission bandwidth in megahertz.

■ Frequency band 5250-5350 MHz

The maximum conducted output power shall not exceed 250 mW or 11 + 10 $\log_{10}$B, dBm, whichever is less.

The maximum e.i.r.p. shall not exceed 1.0 W or 17 + 10 $\log_{10}$B, dBm, whichever is less. B is the 99% emission bandwidth in megahertz. Note that devices with a maximum e.i.r.p. greater than 500 mW shall implement TPC in order to have the capability to operate at least 6 dB below the maximum permitted e.i.r.p. of 1 W.

■ Frequency bands 5470-5600 MHz and 5650-5725 MHz

The maximum conducted output power shall not exceed 250 mW or 11 + 10 $\log_{10}$B, dBm, whichever is less.

The maximum e.i.r.p. shall not exceed 1.0 W or 17 + 10 $\log_{10}$B, dBm, whichever is less. B is the 99% emission bandwidth in megahertz. Note that devices with a maximum e.i.r.p. greater than 500 mW shall implement TPC in order to have the capability to operate at least 6 dB below the maximum permitted e.i.r.p. of 1 W.

■ Frequency band 5725-5850 MHz

The maximum conducted output power shall not exceed 1 W. If transmitting antennas of directional gain greater than 6 dBi are used, the maximum conducted output power shall be reduced by the amount in dB that the directional gain of the antenna exceeds 6 dBi. However, fixed point-to-point devices operating in this band may employ transmitting antennas with directional gain greater than 6 dBi without any corresponding reduction in transmitter conducted power. Fixed point-to-point operations exclude the use of point-to-multipoint systems, omnidirectional applications and multiple collocated transmitters transmitting the same information.

8.2.3 Test Configuration

Test according to clause 6.1 radio frequency test setup

8.2.4 Test Procedure

The maximum average conducted output power can be measured using Method PM-G (Measurement using a gated RF average power meter):

Measurements may be performed using a wideband gated RF power meter provided that the gate parameters are adjusted such that the power is measured only when the EUT is transmitting at its maximum power control level. Since the measurement is made only during the ON time of the transmitter, no duty cycle correction factor is required.

a. The Transmitter output (antenna port) was connected to the power meter.
b. Turn on the EUT and power meter and then record the power value.
c. Repeat above procedures on all channels needed to be tested.

8.2.5 Test Results

Temperature:	25 °C
Relative Humidity:	45%
ATM Pressure:	1011 mbar

Note: N/A

Test Mode	Antenna	Frequency[MHz]	Set Power	TPC Mode	Channel Powert [dBm]	Limit [dBm]	Gain [dBi]	EIRP [dBm]	EIRP Limit [dBm]	Verdict
11A	Ant1	5745	---	NA	12.78	≤30.00	2.07	14.85	---	PASS
11A	Ant1	5785	---	NA	10.50	≤30.00	2.07	12.57	---	PASS
11A	Ant1	5825	---	NA	11.41	≤30.00	2.07	13.48	---	PASS
11N20SISO	Ant1	5745	---	NA	12.66	≤30.00	2.07	14.73	---	PASS
11N20SISO	Ant1	5785	---	NA	10.37	≤30.00	2.07	12.44	---	PASS
11N20SISO	Ant1	5825	---	NA	11.15	≤30.00	2.07	13.22	---	PASS
11N40SISO	Ant1	5755	---	NA	11.67	≤30.00	2.07	13.74	---	PASS
11N40SISO	Ant1	5795	---	NA	9.82	≤30.00	2.07	11.89	---	PASS

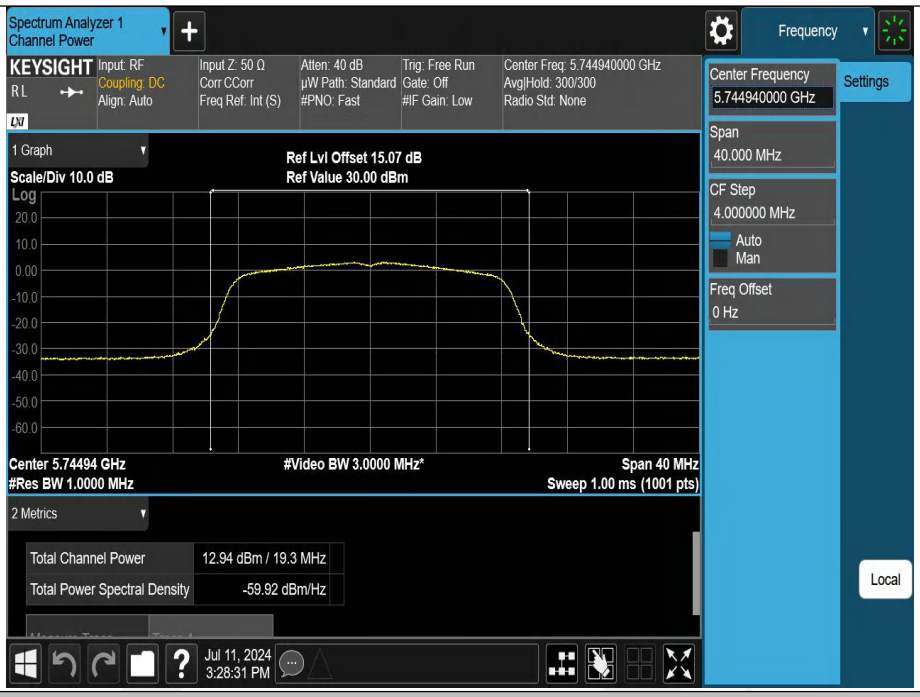

11A-Ant1-5745-PASS

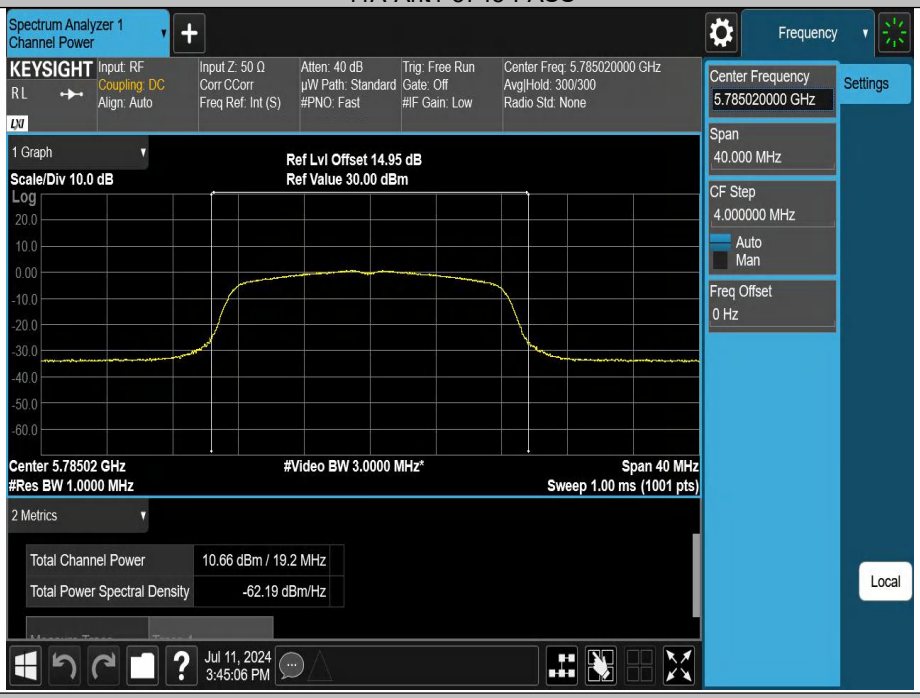

11A-Ant1-5785-PASS

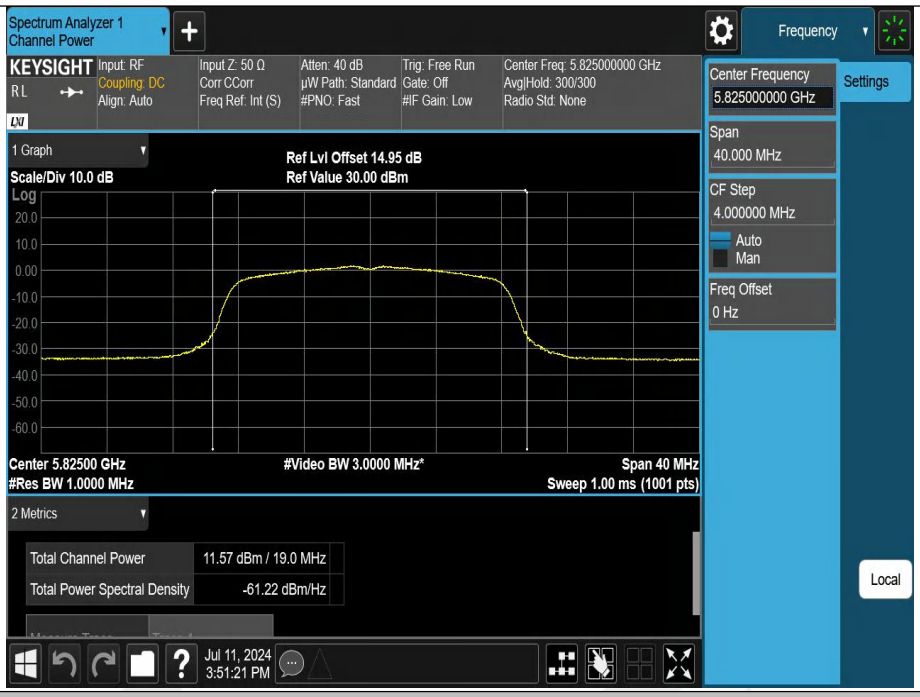

11A-Ant1-5825-PASS

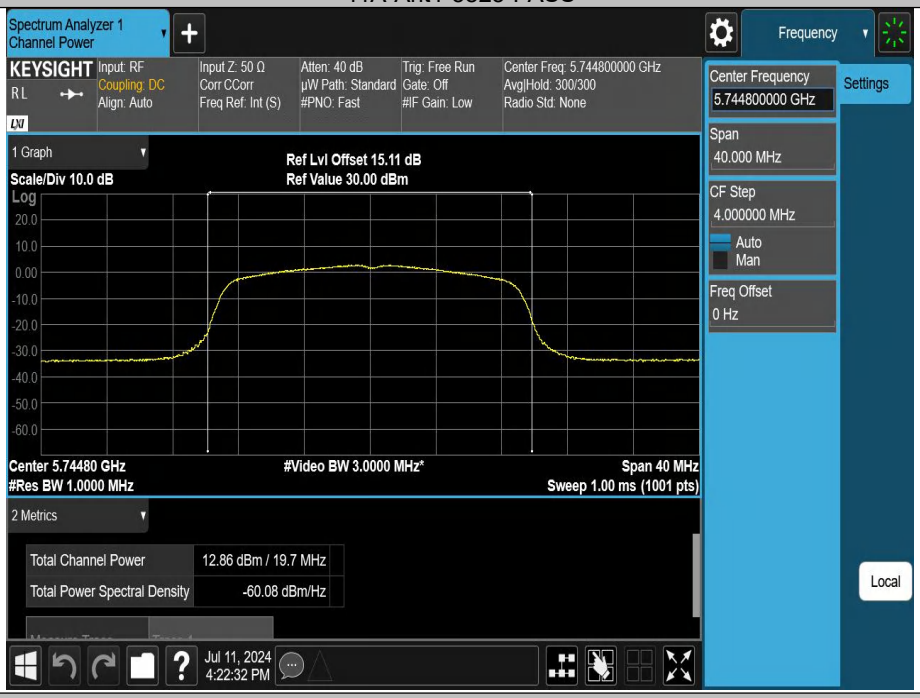

11N20SISO-Ant1-5745-PASS

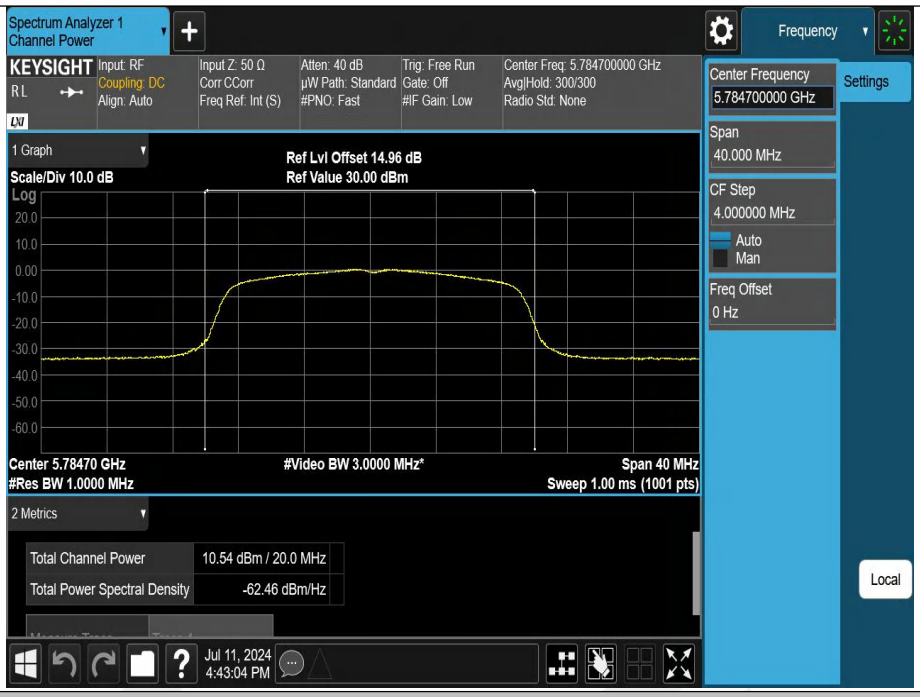

11N20SISO-Ant1-5785-PASS

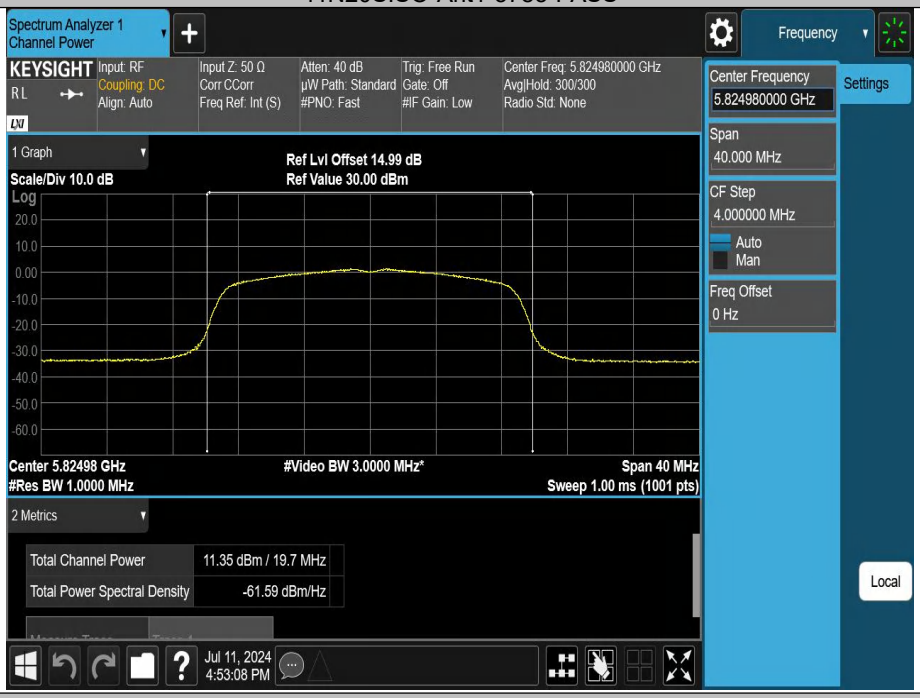

11N20SISO-Ant1-5825-PASS

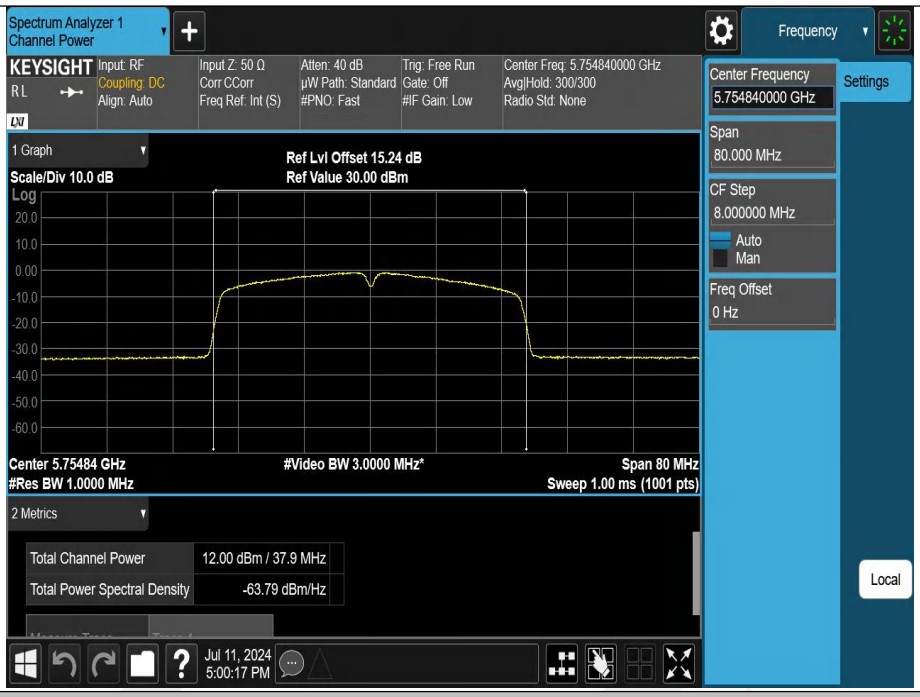

11N40SISO-Ant1-5755-PASS

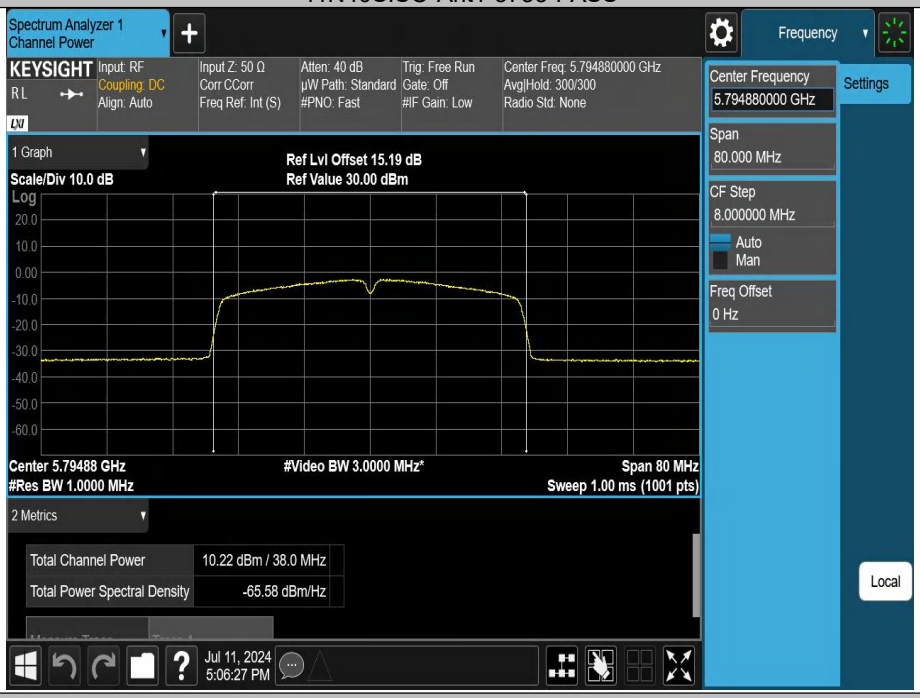

11N40SISO-Ant1-5795-PASS

8.3 MAXIMUM PEAK POWER DENSITY

8.3.1 Applicable Standard

According to FCC Part 15.407(a)(1) for UNII Band I
According to FCC Part 15.407(a)(3) for UNII Band III
According to 789033 D02 Section II(F)
According to RSS 247 6.2

8.3.2 Conformance Limit

FCC Limit:

■ For the band 5.15-5.25 GHz,

(a) (1) (i) For an outdoor access point, the maximum power spectral density shall not exceed 17 dBm in any 1 megahertz band provided the maximum antenna gain does not exceed 6 dBi. If transmitting antennas of directional gain greater than 6 dBi are used, the maximum power spectral density shall be reduced by the amount in dB that the directional gain of the antenna exceeds 6 dBi.

(a) (1) (ii) For an indoor access point, the maximum power spectral density shall not exceed 17 dBm in any 1 megahertz band provided the maximum antenna gain does not exceed 6 dBi. If transmitting antennas of directional gain greater than 6 dBi are used, the maximum power spectral density shall be reduced by the amount in dB that the directional gain of the antenna exceeds 6 dBi.

(a) (1) (iii) For fixed point-to-point access points, the maximum power spectral density shall not exceed 17 dBm in any 1 megahertz band. Fixed point-to-point U-NII devices may employ antennas with directional gain up to 23 dBi without any corresponding reduction in the maximum power spectral density. For fixed point-to-point transmitters that employ a directional antenna gain greater than 23 dBi, a 1 dB reduction in maximum power spectral density is required for each 1 dB of antenna gain in excess of 23 dBi. Fixed, point-to-point operations exclude the use of point-to-multipoint systems, omnidirectional applications, and multiple collocated transmitters transmitting the same information. The operator of the U-NII device, or if the equipment is professionally installed, the installer, is responsible for ensuring that systems employing high gain directional antennas are used exclusively for fixed, point-to-point operations.

(a) (1) (iv) For client devices, the maximum power spectral density shall not exceed 11 dBm in any 1 megahertz band provided the maximum antenna gain does not exceed 6 dBi. If transmitting antennas of directional gain greater than 6 dBi are used, the maximum power spectral density shall be reduced by the amount in dB that the directional gain of the antenna exceeds 6 dBi.

■ For the 5.25-5.35 GHz and 5.47-5.725 GHz bands

(b) (2) The maximum power spectral density shall not exceed 11 dBm in any 1 megahertz band provided the maximum antenna gain does not exceed 6 dBi. If transmitting antennas of directional gain greater than 6 dBi are used, the maximum power spectral density shall be reduced by the amount in dB that the directional gain of the antenna exceeds 6 dBi.

■ For the band 5.725-5.85 GHz

(a) (3)The maximum power spectral density shall not exceed 30 dBm in any 500-kHz band provided the maximum antenna gain does not exceed 6 dBi. If transmitting antennas of directional gain greater than 6 dBi are used, the maximum power spectral density shall be reduced by the amount in dB that the directional gain of the antenna exceeds 6 dBi. However, fixed point-to-point U-NII devices operating in this band may employ transmitting antennas with directional gain greater than 6 dBi without any corresponding reduction in transmitter conducted power. Fixed, point-to-point operations exclude the use of point-to-multipoint systems, omnidirectional applications, and multiple collocated transmitters transmitting the same information. The operator of the U-NII device, or if the equipment is professionally installed, the installer, is responsible for ensuring that systems employing high gain directional antennas are used exclusively for fixed, point-to-point operations

IC Limit:

■ Frequency band 5150-5250 MHz

The e.i.r.p. spectral density shall not exceed 10 dBm in any 1.0 MHz band.

■ Frequency band 5250-5350 MHz
The power spectral density shall not exceed 11 dBm in any 1.0 MHz band.

■ Frequency bands 5470-5600 MHz and 5650-5725 MHz
The power spectral density shall not exceed 11 dBm in any 1.0 MHz band.

■ Frequency band 5725-5850 MHz

The output power spectral density shall not exceed 30 dBm in any 500 kHz band. If transmitting antennas of directional gain greater than 6 dBi are used, the output power spectral density shall be reduced by the amount in dB that the directional gain of the antenna exceeds 6 dBi. However, fixed point-to-point devices operating in this band may employ transmitting antennas with directional gain greater than 6 dBi without any corresponding reduction in transmitter conducted power. Fixed point-to-point operations exclude the use of point-to-multipoint systems, omnidirectional applications and multiple collocated transmitters transmitting the same information.

8.3.3 Test Configuration

Test according to clause 6.1 radio frequency test setup

8.3.4 Test Procedure

Methods refer to FCC KDB 789033

For devices operating in the bands 5.15-5.25 GHz, 5.25-5.35 GHz, and 5.47-5.725 GHz, the above procedures make use of 1 MHz RBW to satisfy directly the 1 MHz reference bandwidth specified in § 15.407(a)(5). For devices operating in the band 5.725-5.85 GHz, the rules specify a measurement bandwidth of 500 kHz. Many spectrum analyzers do not have 500 kHz RBW, thus a narrower RBW may need to be used. The rules permit the use of a RBWs less than 1 MHz, or 500 kHz, "provided that the measured power is integrated over the full reference bandwidth" to show the total power over the specified measurement bandwidth (i.e., 1 MHz, or 500 kHz). If measurements are performed using a reduced resolution bandwidth (< 1 MHz, or < 500 kHz) and integrated over 1 MHz, or 500 KHz bandwidth, the following adjustments to the procedures apply:

a) Set RBW ≥ 1/T, where T is defined in section II.B.I.a).

b) Set VBW ≥ 3 RBW.

c) If measurement bandwidth of Maximum PSD is specified in 500 kHz, add 10log(500kHz/RBW) to the measured result, whereas RBW (< 500 KHz) is the reduced resolution bandwidth of the spectrum analyzer set during measurement.

d) If measurement bandwidth of Maximum PSD is specified in 1 MHz, add 10log(1MHz/RBW) to the measured result, whereas RBW (< 1 MHz) is the reduced resolution bandwidth of spectrum analyzer set during measurement.

e) Care must be taken to ensure that the measurements are performed during a period of continuous transmission or are corrected upward for duty cycle.

Note: As a practical matter, it is recommended to use reduced RBW of 100 KHz for the sections

5.c) and 5.d) above, since RBW=100 KHZ is available on nearly all spectrum analyzers.

8.3.5 Test Results

Temperature:	25 ˚C
Relative Humidity:	45%
ATM Pressure:	1011 mbar

Note: N/A

TestMode	Antenna	Frequency[MHz]	Result [dBm/MHz]	Limit[dBm/MHz]	Verdict
11A	Ant1	5745	0.34	≤30.00	PASS
11A	Ant1	5785	-2.02	≤30.00	PASS
11A	Ant1	5825	-0.89	≤30.00	PASS
11N20SISO	Ant1	5745	0.37	≤30.00	PASS
11N20SISO	Ant1	5785	-2.12	≤30.00	PASS
11N20SISO	Ant1	5825	-1.06	≤30.00	PASS
11N40SISO	Ant1	5755	-3.45	≤30.00	PASS
11N40SISO	Ant1	5795	-4.74	≤30.00	PASS

Note：1. The Result and Limit Unit is dBm/500 kHz in the band 5.725–5.85 GHz.
2. The Duty Cycle Factor and RBW Factor is compensated in the graph.

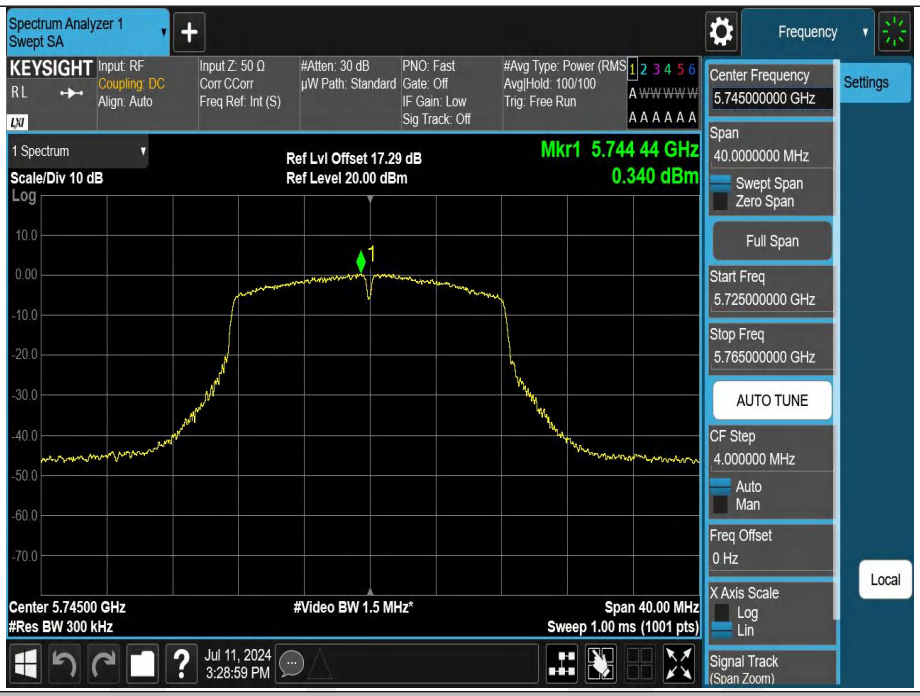

11A-Ant1-5745-PASS

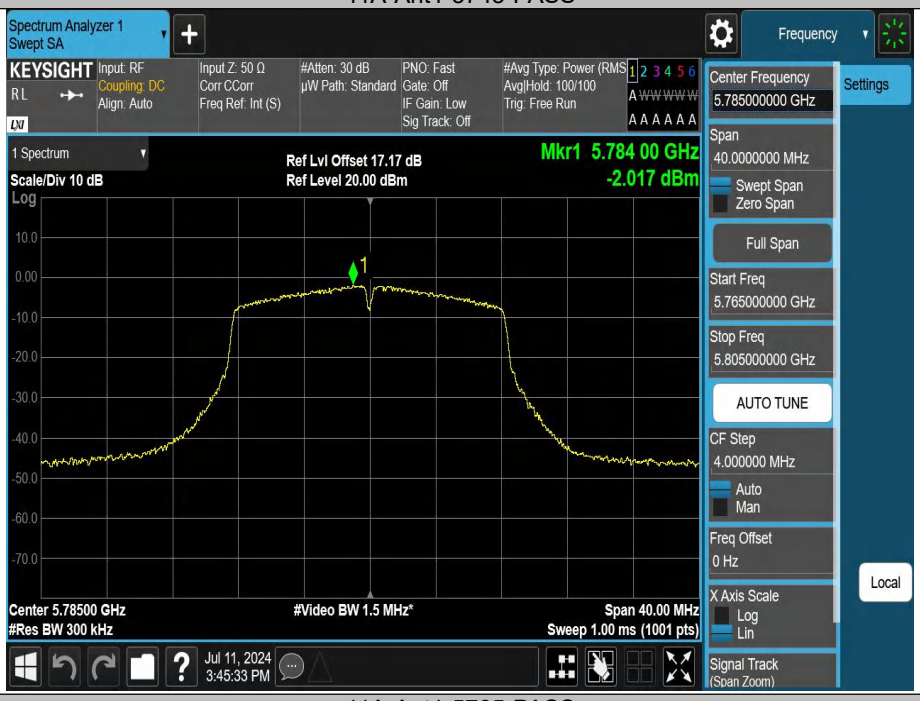

11A-Ant1-5785-PASS

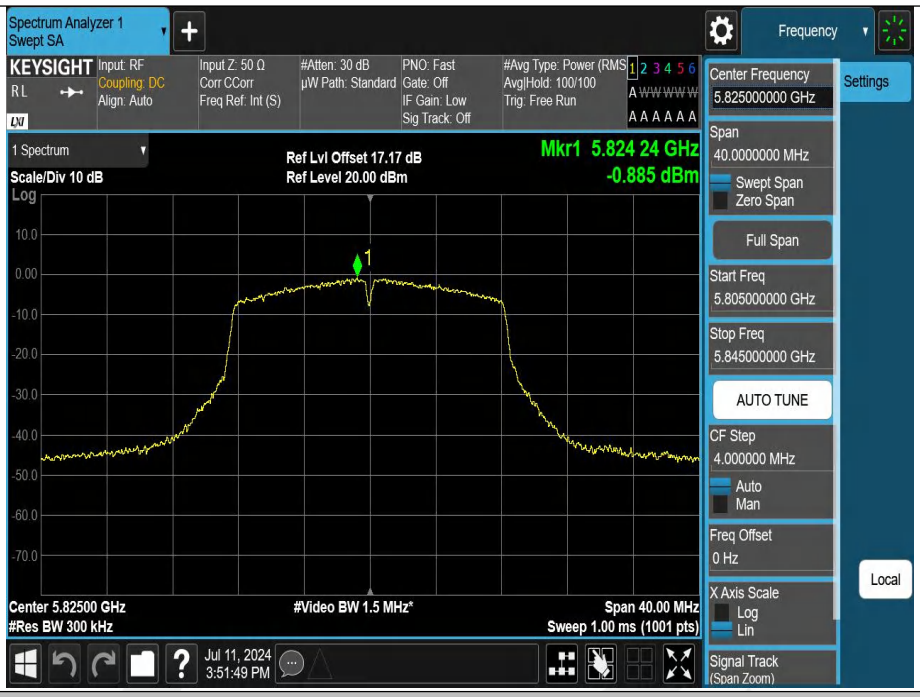

11A-Ant1-5825-PASS

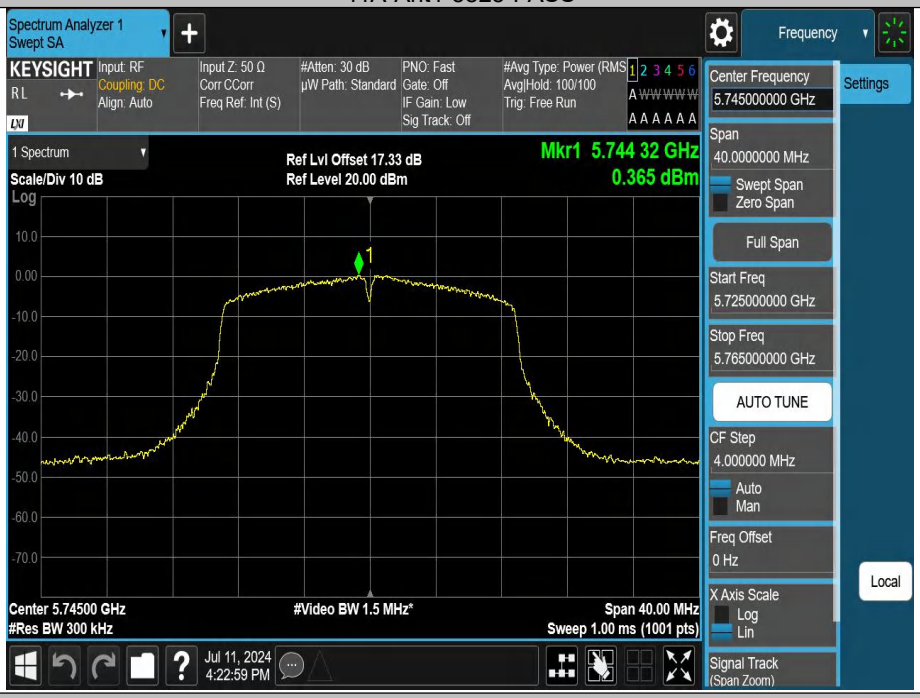

11N20SISO-Ant1-5745-PASS

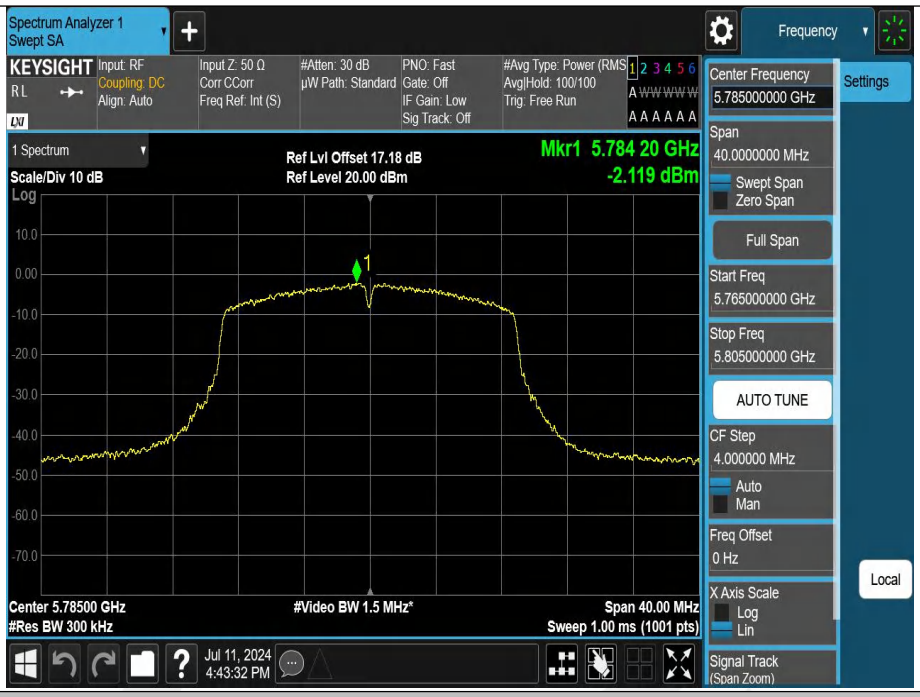

11N20SISO-Ant1-5785-PASS

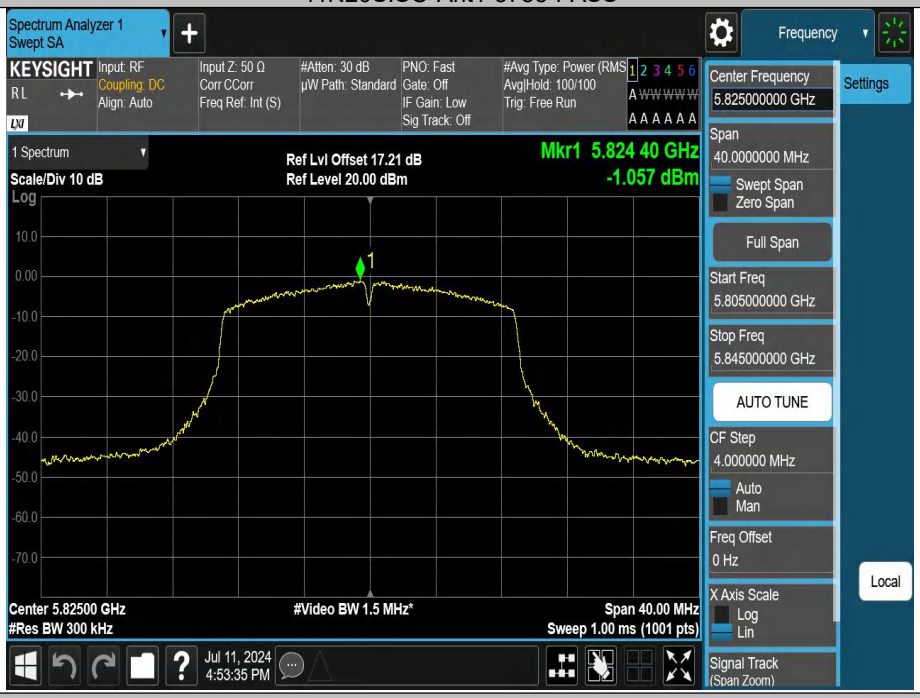

11N20SISO-Ant1-5825-PASS

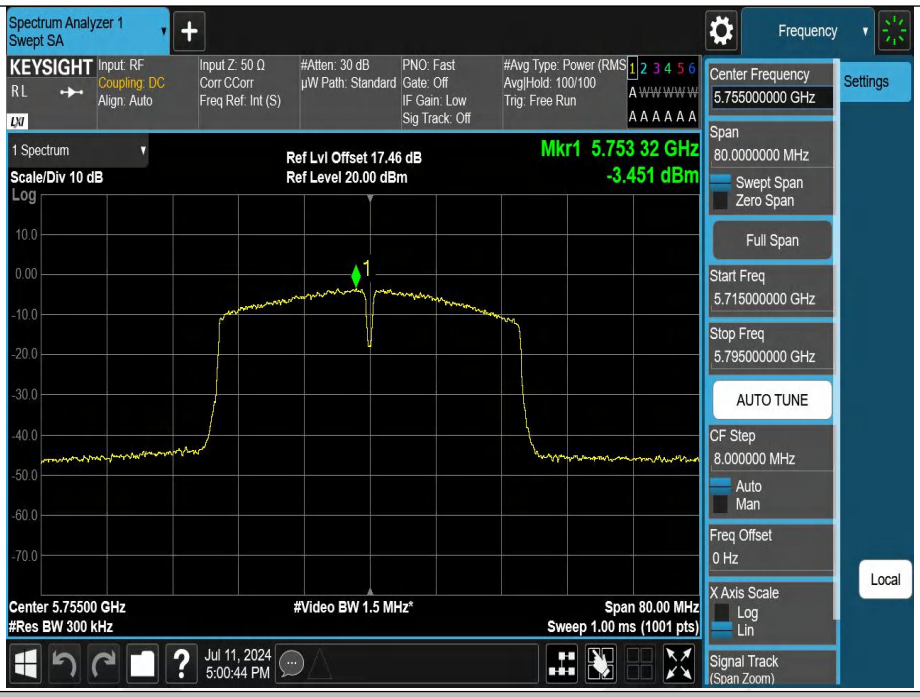

11N40SISO-Ant1-5755-PASS

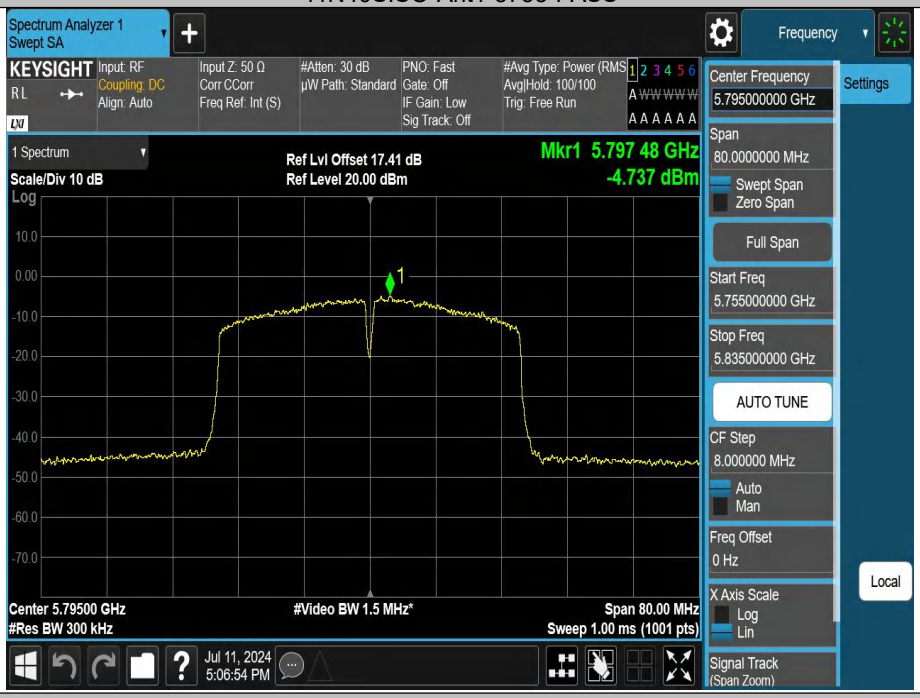

11N40SISO-Ant1-5795-PASS

8.4 UNDESIRABLE RADIATED SPURIOUS EMISSION

8.4.1 Applicable Standard

According to FCC Part 15.407 (b), 15.209, 15.205
According to 789033 D02 Section II(G)
According to RSS-GEN 8.9, 8.10 and 6.13

8.4.2 Conformance Limit

For transmitters operating in the 5.15-5.25 GHz band: All emissions outside of the 5.15-5.35 GHz band shall not exceed an e.i.r.p. of −27 dBm/MHz.
For transmitters operating in the 5.25-5.35 GHz band: All emissions outside of the 5.15-5.35 GHz band shall not exceed an e.i.r.p. of −27 dBm/MHz.
For transmitters operating in the 5.47-5.725 GHz band: All emissions outside of the 5.47-5.725 GHz band shall not exceed an e.i.r.p. of −27 dBm/MHz.
For transmitters operating in the 5.725-5.85 GHz band: All emissions shall be limited to a level of −27 dBm/MHz at 75 MHz or more above or below the band edge increasing linearly to 10 dBm/MHz at 25 MHz above or below the band edge, and from 25 MHz above or below the band edge increasing linearly to a level of 15.6 dBm/MHz at 5 MHz above or below the band edge, and from 5 MHz above or below the band edge increasing linearly to a level of 27 dBm/MHz at the band edge.
The emission measurements shall be performed using a minimum resolution bandwidth of 1 MHz. A lower resolution bandwidth may be employed near the band edge, when necessary, provided the measured energy is integrated to show the total power over 1 MHz.
Unwanted emissions below 1 GHz must comply with the general field strength limits set forth in §15.209
The emissions from an intentional radiator shall not exceed the field strength levels specified in the following table 15.209(a):

Restricted Frequency(MHz)	Field Strength (μV/m)	Field Strength (dBμV/m)	Measurement Distance
0.009-0.490	2400/F(KHz)	20 log (uV/m)	300
0.490-1.705	24000/F(KHz)	20 log (uV/m)	30
1.705-30	30	29.5	30
30-88	100	40	3
88-216	150	43.5	3
216-960	200	46	3
Above 960	500	54	3

The provisions of §15.205 apply to intentional radiators operating under this section,15.205 Restricted bands of operation

MHz	MHz	MHz	GHz
0.090-0.110	16.42-16.423	399.9-410	4.5-5.15
10.495-0.505	16.69475-16.69525	608-614	5.35-5.46
2.1735-2.1905	16.80425-16.80475	960-1240	7.25-7.75
4.125-4.128	25.5-25.67	1300-1427	8.025-8.5
4.17725-4.17775	37.5-38.25	1435-1626.5	9.0-9.2
4.20725-4.20775	73-74.6	1645.5-1646.5	9.3-9.5
6.215-6.218	74.8-75.2	1660-1710	10.6-12.7
6.26775-6.26825	123-138	2200-2300	14.47-14.5
8.291-8.294	149.9-150.05	2310-2390	15.35-16.2
8.362-8.366	156.52475-156.52525	2483.5-2500	17.7-21.4
8.37625-8.38675	156.7-156.9	2690-2900	22.01-23.12
8.41425-8.41475	162.0125-167.17	3260-3267	23.6-24.0
12.29-12.293	167.72-173.2	3332-3339	31.2-31.8
12.51975-12.52025	240-285	3345.8-3358	36.43-36.5
12.57675-12.57725	322-335.4	3600-4400	(2)
13.36-13.41			

Remark: 1. Emission level in dBuV/m=20 log (uV/m)
2. Measurement was performed at an antenna to the closed point of EUT distance of meters.
3. Only spurious frequency is permitted to locate within the Restricted Bands specified in provision of 15.205, and the emissions located in restricted bands also comply with 15.209 limit.

8.4.3 Test Configuration

Test according to clause 6.2 radio frequency test setup

8.4.4 Test Procedure

■ Unwanted Emissions Measurements below 1000 MHz

Compliance shall be demonstrated using CISPR quasi-peak detection; however, peak detection is permitted as an alternative to quasi-peak detection.
The EUT was placed on a turn table which is 0.8m above ground plane.
And also, each emission was to be maximized by changing the polarization of receiving antenna both horizontal and vertical.
Repeat above procedures until all frequency measured was complete.
We use software control the EUT, Let EUT hopping on and transmit with highest power, All the modes have been tested and the worst result was reported.
Use the following spectrum analyzer settings:
Set RBW=120kHz for f < 1 GHz(30MHz to 1GHz), 200Hz for f<150KHz(9KHz to 150KHz), 9KHz for <30MHz(150KHz to 30KHz).
Set the VBW > RBW.
Detector = Peak.
Trace mode = max hold.
Follow the guidelines in ANSI C63.10-2013 with respect to maximizing the emission by rotating the EUT, measuring the emission while the EUT is situated in three orthogonal planes (if appropriate), adjusting the measurement antenna height and polarization, etc. A pre-amp and a high pass filter are required for this test, in order to provide the measuring system with sufficient sensitivity. Allow the trace to stabilize. The peak reading of the emission, after being corrected by the antenna factor, cable loss, pre-amp gain, etc., is the peak field strength, which must comply with the limit specified in Section 15.35(b). Submit this data.
Repeat above procedures until all frequency measured was complete.

■ Unwanted Maximum peak Emissions Measurements above 1000 MHz

Maximum emission levels are measured by setting the analyzer as follows:
RBW = 1 MHz.
VBW ≥ 3 MHz.
Detector = Peak.
Sweep time = auto.
Trace mode = max hold.
Allow sweeps to continue until the trace stabilizes. Note that if the transmission is not continuous, the time required for the trace to stabilize will increase by a factor of approximately 1/x, where x is the duty cycle. For example, at 50 percent duty cycle, the measurement time will increase by a factor of two relative to measurement time for continuous transmission.

■ Unwanted Average Emissions Measurements above 1000 MHz

Method VB (Averaging using reduced video bandwidth): Alternative method.
RBW = 1 MHz.
Video bandwidth. • If the EUT is configured to transmit with duty cycle ≥ 98 percent, set VBW ≤ RBW/100 (i.e., 10 kHz) but not less than 10 Hz.
• If the EUT duty cycle is < 98 percent, set VBW ≥ 1/T, where T is defined in section II.B.1.a).
Video bandwidth mode or display mode • The instrument shall be set to ensure that video filtering is applied in the power domain. Typically, this requires setting the detector mode to RMS and setting the Average-VBW Type to Power (RMS).
• As an alternative, the analyzer may be set to linear detector mode. Ensure that video filtering is applied in linear voltage domain (rather than in a log or dB domain). Some analyzers require linear display mode in order to accomplish this. Others have a setting for Average-VBW Type, which can be set to “Voltage” regardless of the display mode.
Detector = Peak.

Sweep time = auto.
Trace mode = max hold.
Allow max hold to run for at least 50 traces if the transmitted signal is continuous or has at least 98 percent duty cycle. For lower duty cycles, increase the minimum number of traces by a factor of 1/x, where x is the duty cycle. For example, use at least 200 traces if the duty cycle is 25 percent. (If a specific emission is demonstrated to be continuous—i.e., 100 percent duty cycle—rather than turning on and off with the transmit cycle, at least 50 traces shall be averaged.)

■ Band edge measurements.
Unwanted band-edge emissions may be measured using either of the special band-edge measurement techniques (the marker-delta or integration methods) described below. Note that the marker-delta method is primarily a radiated measurement technique that requires the 99% occupied bandwidth edge to be within 2 MHz of the authorized band edge, whereas the integration method can be used in either a radiated or conducted measurement without any special requirement with regards to the displacement of the unwanted emission(s) relative to the authorized bandwidth.
Marker-Delta Method.
The marker-delta method, as described in ANSI C63.10, can be used to perform measurements of the radiated unwanted emissions level of emissions provided that the 99% occupied bandwidth of the fundamental is within 2 MHz of the authorized band-edge.

8.4.5 Test Results

Temperature:	22° C
Relative Humidity:	43%
ATM Pressure:	1011 mbar

■ Spurious Emission below 30MHz(9KHz to 30MHz)

Freq. (MHz)	Ant.Pol.	Emission Level(dBuV/m)		Limit 3m(dBuV/m)		Over(dB)	
	H/V	PK	AV	PK	AV	PK	AV
--	--	--	--	--	--	--	--

Note: the amplitude of spurious emission that is attenuated by more than 20dB below the permissible limit has no need to be reported.
Distance extrapolation factor =40log(Specific distance/ test distance)(dB);
Limit line=Specific limits(dBuV) + distance extrapolation factor

■ For Undesirable radiated Spurious Emission in U-NII -3

● Undesirable radiated Spurious Emission Above 1GHz (1GHz to 40GHz)

All the antenna(Antenna 1) and modes(802.11a/n) has been tested and the worst(Antenna 1, 802.11a) result recorded was report as below:

Test mode:	802.11a	Frequency:	Channel 149: 5745MHz		
Freq. (MHz)	Ant.Pol.	Field Strength (dBuV/m)	E.I.R.P (dBm)	Limit (dBm)	Over(dB)
11254.54	V	56.59	-38.64	-27	-11.64
14905.06	V	54.79	-40.44	-27	-13.44
17869.13	V	52.62	-42.61	-27	-15.61
11933.22	H	53.37	-41.86	-27	-14.86
14736.14	H	55.04	-40.19	-27	-13.19
17754.89	H	52.89	-42.34	-27	-15.34

Test mode:	802.11a	Frequency:	Channel 157: 5785MHz		
Freq. (MHz)	Ant.Pol.	Field Strength (dBuV/m)	E.I.R.P (dBm)	Limit (dBm)	Over(dB)
11286.41	V	55.34	-39.89	-27	-12.89
14925.72	V	54.33	-40.90	-27	-13.90
17896.36	V	53.84	-41.39	-27	-14.39
11867.6	H	54.14	-41.09	-27	-14.09
14670.02	H	54.77	-40.46	-27	-13.46
17673.34	H	53.19	-42.04	-27	-15.04

Test mode:	802.11a	Frequency:	Channel 165: 5825MHz		
Freq. (MHz)	Ant.Pol.	Field Strength (dBuV/m)	E.I.R.P (dBm)	Limit (dBm)	Over(dB)
11238.62	V	56.56	-38.67	-27	-11.67
14904.73	V	54.93	-40.30	-27	-13.30
17898.41	V	52.68	-42.55	-27	-15.55
11918.38	H	54.98	-40.25	-27	-13.25
14735.49	H	54.52	-40.71	-27	-13.71
17726.35	H	54.20	-41.03	-27	-14.03

Note: (1) All Readings are Peak Value (VBW=3MHz) and Average Value (VBW=10Hz).
(2) Emission Level= Reading Level+Probe Factor +Cable Loss.
(3)EIRP[dBm] = E[dBμV/m] + 20 log(d[meters]) - 104.77
d is the measurement distance in 3 meters

Test mode: 802.11a Frequency: Channel 149: 5745MHz

Freq. (MHz)	Ant.Pol.	Emission Level(dBuV/m)		Limit 3m(dBuV/m)		Over(dB)	
	H/V	PK	AV	PK	AV	PK	AV
7936.00	V	55.78	41.95	74.00	54.00	-18.22	-12.05
9704.00	V	55.89	42.05	74.00	54.00	-18.11	-11.95
14226.00	V	55.35	41.49	74.00	54.00	-18.65	-12.51
8106.00	H	56.17	42.33	74.00	54.00	-17.83	-11.67
10622.00	H	55.79	41.91	74.00	54.00	-18.21	-12.09
14396.00	H	56.09	42.23	74.00	54.00	-17.91	-11.77

Test mode: 802.11a Frequency: Channel 157: 5785MHz

Freq. (MHz)	Ant.Pol.	Emission Level(dBuV/m)		Limit 3m(dBuV/m)		Over(dB)	
	H/V	PK	AV	PK	AV	PK	AV
8038.00	V	55.55	41.79	74.00	54.00	-18.45	-12.21
10690.00	V	55.70	41.84	74.00	54.00	-18.30	-12.16
14430.00	V	54.90	41.04	74.00	54.00	-19.10	-12.96
8072.00	H	55.15	41.27	74.00	54.00	-18.85	-12.73
10316.00	H	55.35	41.52	74.00	54.00	-18.65	-12.48
13138.00	H	55.25	41.42	74.00	54.00	-18.75	-12.58

Test mode:: 802.11a Frequency: Channel 165: 5825MHz

Freq. (MHz)	Ant.Pol.	Emission Level(dBuV/m)		Limit 3m(dBuV/m)		Over(dB)	
	H/V	PK	AV	PK	AV	PK	AV
8616.00	V	55.48	41.60	74.00	54.00	-18.52	-12.40
10486.00	V	55.62	41.77	74.00	54.00	-18.38	-12.23
14294.00	V	55.50	41.66	74.00	54.00	-18.50	-12.34
7800.00	H	55.53	41.65	74.00	54.00	-18.47	-12.35
8956.00	H	55.83	41.98	74.00	54.00	-18.17	-12.02
13988.00	H	55.25	41.39	74.00	54.00	-18.75	-12.61

Note:
(1) All Readings are Peak Value (VBW=3MHz) and Average Value (VBW=10Hz).
(2) Emission Level= Reading Level+Correct Factor.
(3) Correct Factor= Ant_F + Cab_L - Preamp
(4) The reading of emissions are attenuated more than 20dB below the permissible limits or the field strength is too small to be measured.

● Undesirable radiated Undesirable radiated Spurious Emission in Band Edge
All the antenna(Antenna 1) and modes(802.11a/n) has been tested and the worst(Antenna 1, 802.11a) result recorded was report as below:

Test mode:	802.11a	Frequency:	Channel 149: 5745MHz		
Freq. (MHz)	Ant.Pol.	Field Strength (RBW=100KHz) (dBuV/m)	E.I.R.P (dBm)	Limit (dBm)	Verdict
5605.5	V	50.21	-45.02	68.23	Pass
5636.25	H	49.79	-45.44	68.23	Pass

Test mode:	802.11a	Frequency:	Channel 165: 5825MHz		
Freq. (MHz)	Ant.Pol.	Field Strength (RBW=100KHz) (dBuV/m)	E.I.R.P (dBm)	Limit (dBm)	Verdict
5945	V	50.95	-44.28	68.23	Pass
5936	H	50.52	-44.71	68.23	Pass

Note: (1) All Readings are Peak Value (VBW=3MHz) and Average Value (VBW=10Hz).
(2) Emission Level= Reading Level+Probe Factor +Cable Loss.
(3)EIRP[dBm] = E[dBμV/m] + 20 log(d[meters]) - 104.77
d is the measurement distance in 3 meters

U-NII -3			
Test Model	Undesirable radiated Undesirable radiated Spurious Emission in Band Edge		
802.11a	Channel 149: 5745MHz	Ant.Pol	H

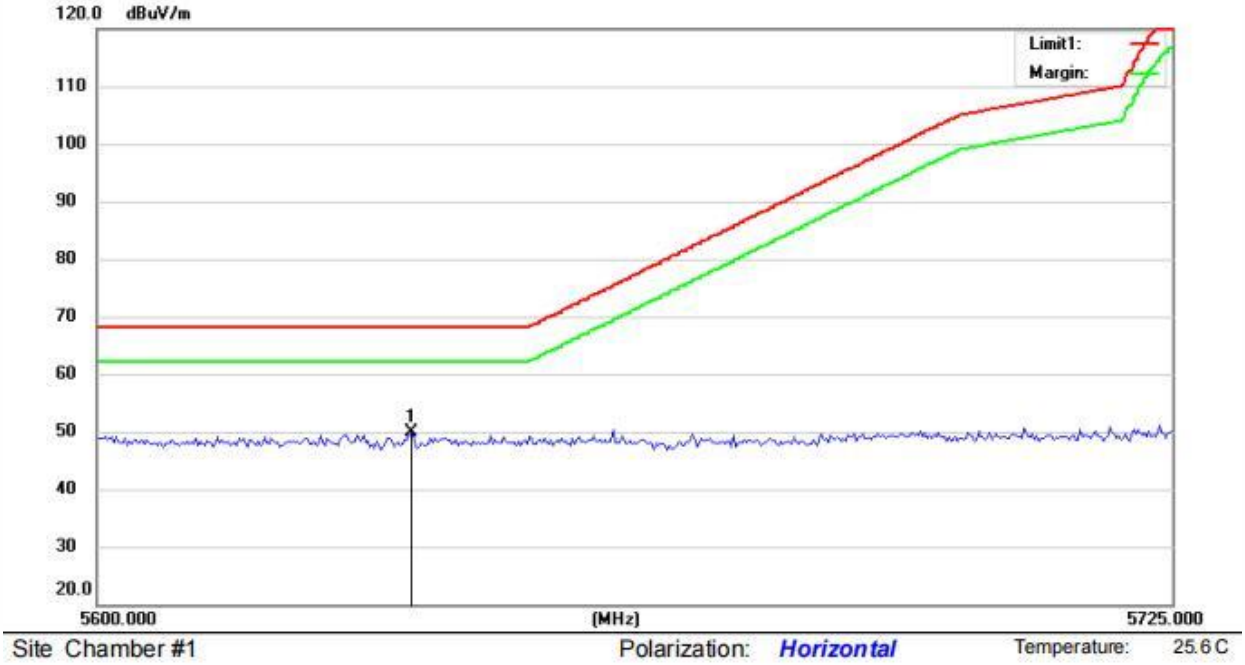

U-NII -3			
Test Model	Undesirable radiated Undesirable radiated Spurious Emission in Band Edge		
802.11a	Channel 149: 5745MHz	Ant.Pol	V

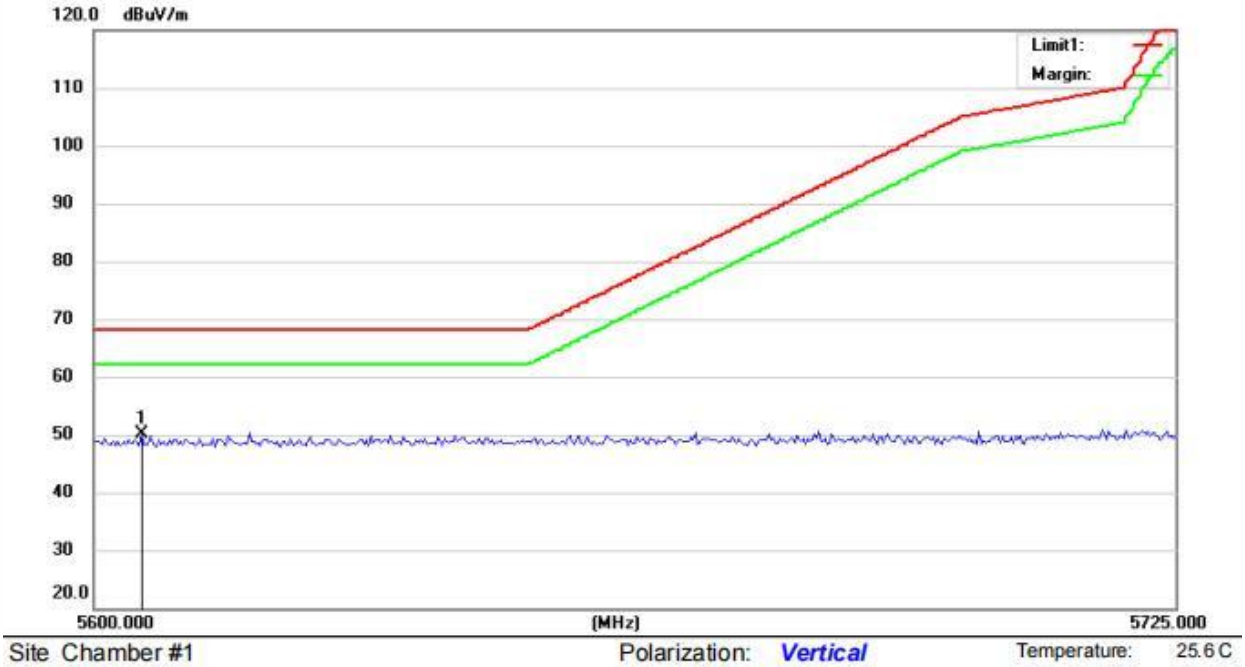

U-NII -3			
Test Model	Undesirable radiated Undesirable radiated Spurious Emission in Band Edge		
802.11a	Channel 165: 5825MHz	Ant.Pol	H

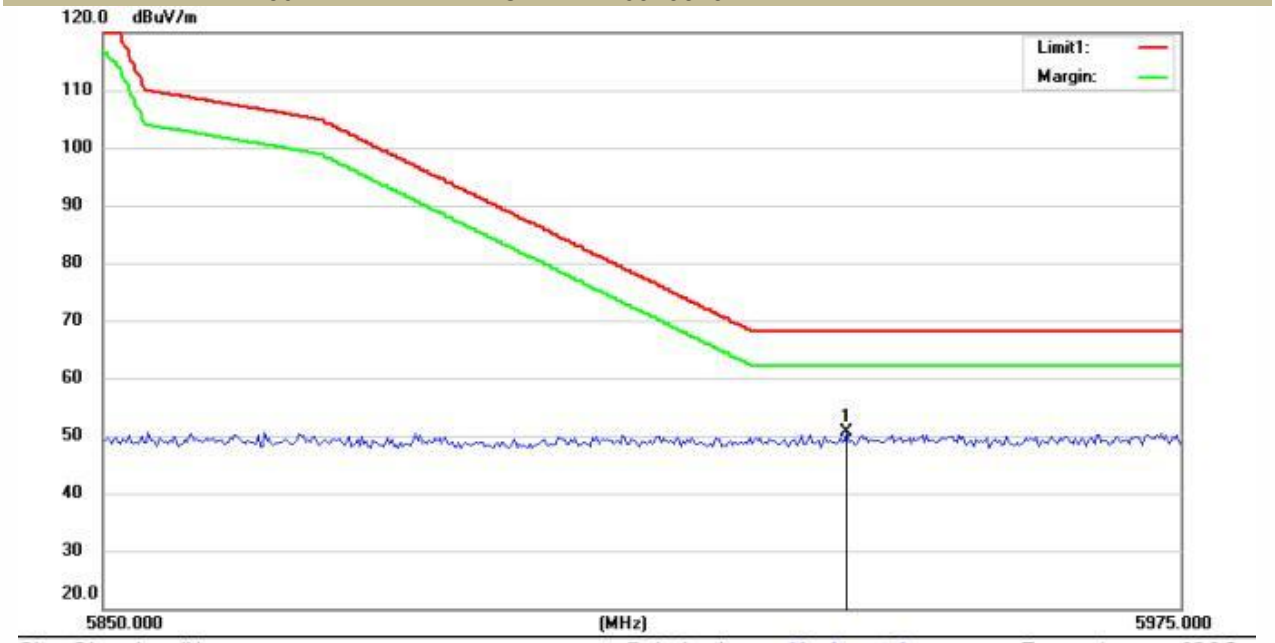

Site Chamber #1 Polarization: *Horizontal* Temperature: 25.6 C

U-NII -3			
Test Model	Undesirable radiated Undesirable radiated Spurious Emission in Band Edge		
802.11a	Channel 165: 5825MHz	Ant.Pol	V

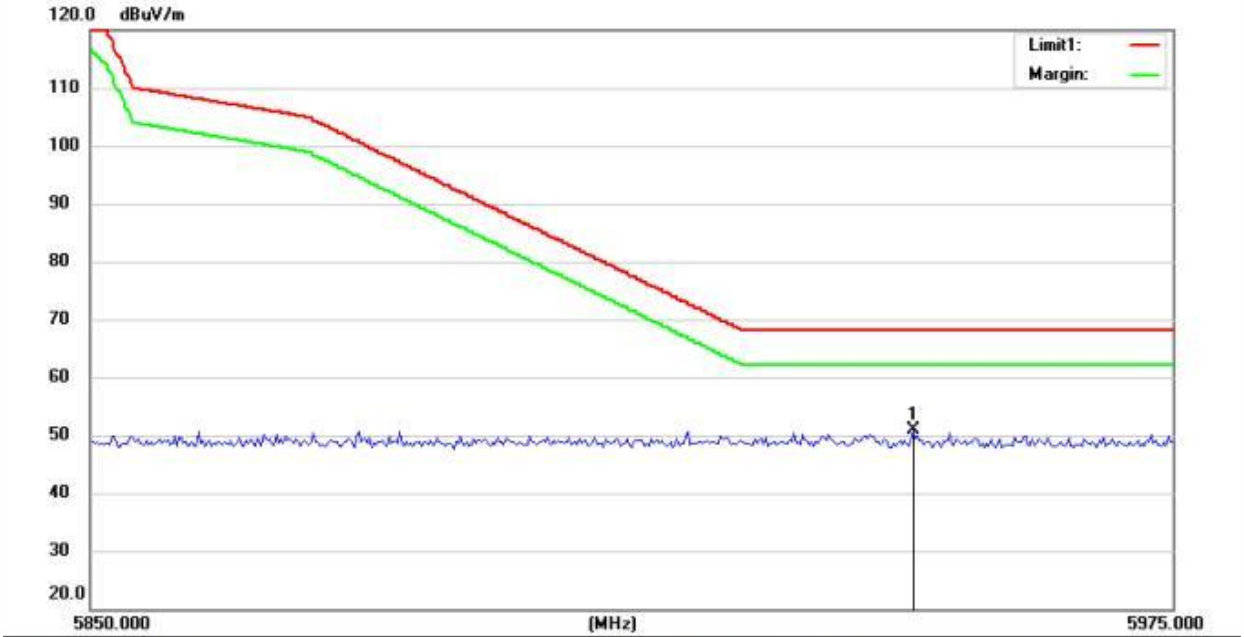

Site Chamber #1 Polarization: *Vertical* Temperature: 25.6 C

■ Undesirable radiated Spurious Emission below 1GHz (30MHz to 1GHz)
All the antenna(Antenna 1) and modes(802.11a/n) has been tested and the worst(Antenna 1 , 802.11a) result recorded was report as below:

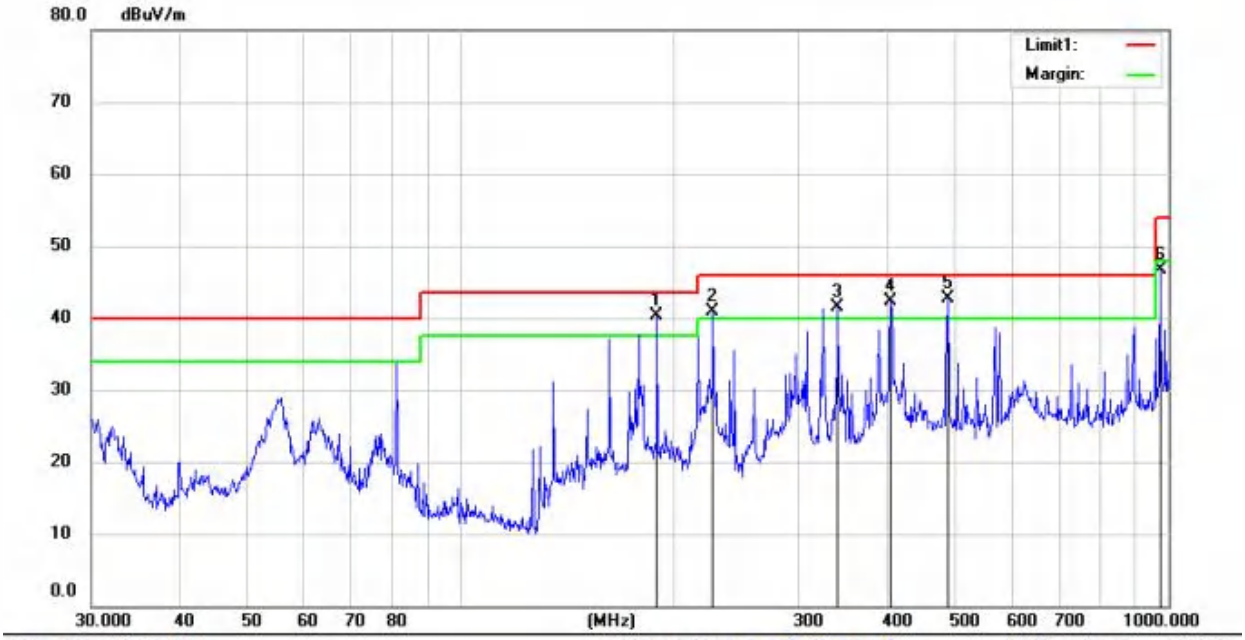

Site Chamber #1 Polarization: *Horizontal* Temperature: 23.6 C

No.	Mk.	Freq.	Reading Level	Ant. Factor	Pre Amp Gain	Cable loss	Measure-ment	Limit	Over		HI	Degree	
		MHz	dBuV	dB/m	dB	dB	dBuV/m	dBuV/m	dB	Detector	cm	deg.	Comment
1	!	189.0740	58.28	10.71	30.42	1.64	40.21	43.50	-3.29	QP			
2	!	226.8934	56.83	12.35	30.22	1.93	40.89	46.00	-5.11	QP			
3	!	340.7816	54.29	14.8	29.83	2.33	41.59	46.00	-4.41	QP			
4	!	404.6664	52.08	16.36	29.82	3.61	42.23	46.00	-3.77	QP			
5	*	487.3150	52.21	17.57	29.81	2.82	42.79	46.00	-3.21	QP			
6		972.3373	48.77	23.33	29.5	4.09	46.69	54.00	-7.31	QP			

*:Maximum data x:Over limit !:over margin Operator: Ccyf

Site Chamber #1 Polarization: *Vertical* Temperature: 23.6 C

No.	Mk.	Freq.	Reading Level	Ant. Factor	Pre Amp Gain	Cable loss	Measure-ment	Limit	Over		HI	Degree	
		MHz	dBuV	dB/m	dB	dB	dBuV/m	dBuV/m	dB	Detector	cm	deg.	Comment
1	!	80.9274	56.99	8.03	30.6	1.05	35.47	40.00	-4.53	QP			
2	*	178.1325	59.87	9.66	30.48	1.59	40.64	43.50	-2.86	QP			
3	!	189.0741	58.38	10.71	30.42	1.64	40.31	43.50	-3.19	QP			
4	!	324.4560	55.99	14.44	29.83	2.26	42.86	46.00	-3.14	QP			
5	!	406.0880	52.75	16.37	29.82	3.58	42.88	46.00	-3.12	QP			
6	!	487.3150	52.40	17.57	29.81	2.82	42.98	46.00	-3.02	QP			

*:Maximum data x:Over limit !:over margin Operator: Ccyf

8.5 POWER LINE CONDUCTED EMISSIONS

8.5.1 Applicable Standard

According to FCC Part 15.207(a)
According to IC RSS-Gen 8.8

8.5.2 Conformance Limit

Conducted Emission Limit

Frequency(MHz)	Quasi-peak	Average
0.15-0.5	66-56	56-46
0.5-5.0	56	46
5.0-30.0	60	50

Note: 1. The lower limit shall apply at the transition frequencies
2. The limit decreases in line with the logarithm of the frequency in the range of 0.15 to 0.50MHz.

8.5.3 Test Configuration

Test according to clause 6.3 conducted emission test setup

8.5.4 Test Procedure

The EUT was placed on a table which is 0.8m above ground plane.
Maximum procedure was performed on the highest emissions to ensure EUT compliance.
Repeat above procedures until all frequency measured were complete.

8.5.5 Test Results

Pass

The AC120V &240V voltage have been tested, and the worst result recorded was report as below:

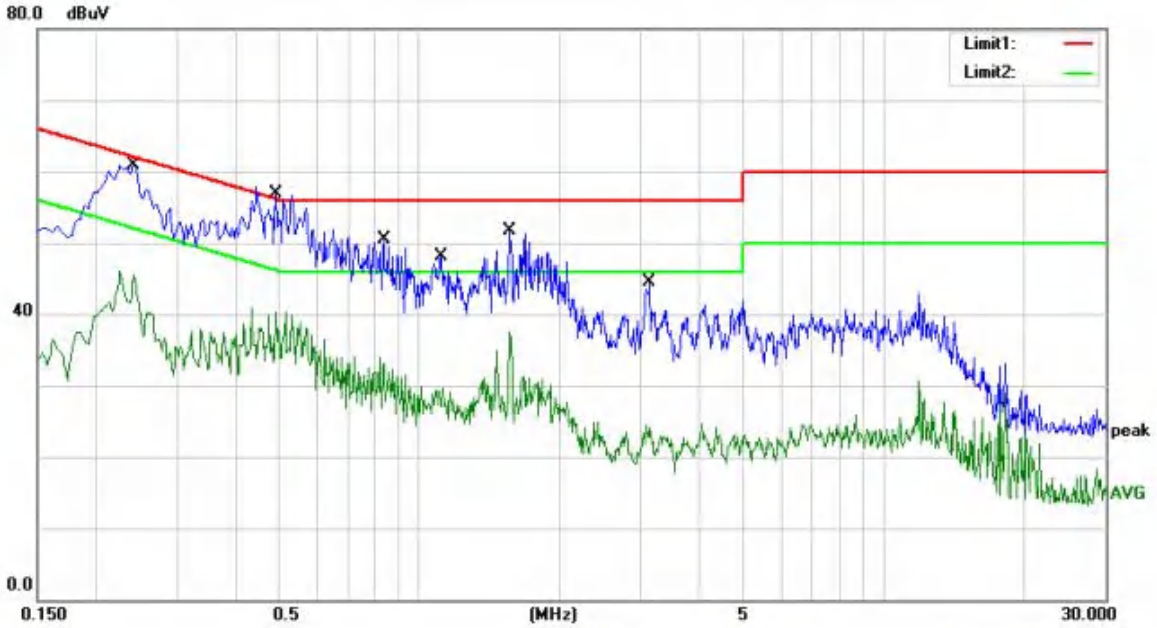

Site site #1 Phase: L1 Temperature: 22.5

No.	Mk.	Freq.	Reading Level	Correct Factor	Measure-ment	Limit	Over		
		MHz	dBuV	dB	dBuV	dBuV	dB	Detector	Comment
1		0.2420	39.74	17.06	56.80	62.03	-5.23	QP	
2		0.2420	29.11	17.06	46.17	52.03	-5.86	AVG	
3	*	0.4900	35.50	17.10	52.60	56.17	-3.57	QP	
4		0.4900	23.27	17.10	40.37	46.17	-5.80	AVG	
5		0.8380	33.39	17.02	50.41	56.00	-5.59	QP	
6		0.8380	16.84	17.02	33.86	46.00	-12.14	AVG	
7		1.1140	31.06	17.04	48.10	56.00	-7.90	QP	
8		1.1140	12.62	17.04	29.66	46.00	-16.34	AVG	
9		1.5620	34.65	17.07	51.72	56.00	-4.28	QP	
10		1.5620	20.45	17.07	37.52	46.00	-8.48	AVG	
11		3.1300	27.54	17.02	44.56	56.00	-11.44	QP	
12		3.1300	7.55	17.02	24.57	46.00	-21.43	AVG	

*:Maximum data x:Over limit !:over margin Comment: Factor build in receiver. Operator: Jian

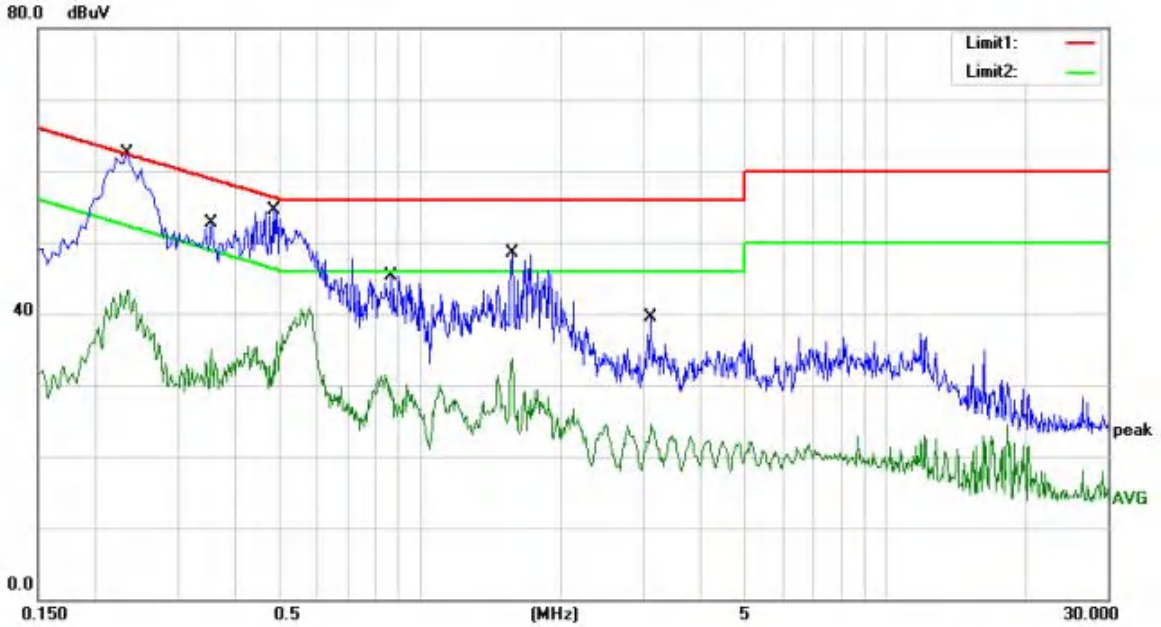

Site site #1 Phase: N Temperature: 22.5

No.	Mk.	Freq.	Reading Level	Correct Factor	Measure-ment	Limit	Over		
		MHz	dBuV	dB	dBuV	dBuV	dB	Detector	Comment
1	*	0.2340	40.24	17.06	57.30	62.31	-5.01	QP	
2		0.2340	26.29	17.06	43.35	52.31	-8.96	AVG	
3		0.3540	35.69	17.07	52.76	58.87	-6.11	QP	
4		0.3540	17.98	17.07	35.05	48.87	-13.82	AVG	
5		0.4820	30.40	17.10	47.50	56.30	-8.80	QP	
6		0.4820	18.15	17.10	35.25	46.30	-11.05	AVG	
7		0.8660	28.35	17.02	45.37	56.00	-10.63	QP	
8		0.8660	14.58	17.02	31.60	46.00	-14.40	AVG	
9		1.5700	31.52	17.08	48.60	56.00	-7.40	QP	
10		1.5700	16.60	17.08	33.68	46.00	-12.32	AVG	
11		3.1260	22.49	17.02	39.51	56.00	-16.49	QP	
12		3.1260	7.48	17.02	24.50	46.00	-21.50	AVG	

*:Maximum data x:Over limit !:over margin Comment: Factor build in receiver. Operator: Jian

8.6 ANTENNA APPLICATION

8.6.1 Antenna Requirement

Standard	Requirement
FCC CRF Part 15.203	An intentional radiator shall be designed to ensure that no antenna other than that furnished by the responsible party shall be used with the device. The use of a permanently attached antenna or of an antenna that uses a unique coupling to the intentional radiator shall be considered sufficient to comply with the provisions of this section. The manufacturer may design the unit so that a broken antenna can be replaced by the user, but the use of a standard antenna jack or electrical connector is prohibited.
FCC 47 CFR Part 15.407(a)	If transmitting antennas of directional gain greater than 6dBi are used, the power shall be reduced by the amount in dB that the directional gain of the antenna exceeds 6dBi.
RSS-Gen Section 6.8	The applicant for equipment certification shall provide a list of all antenna types that may be used with the transmitter, where applicable (i.e. for transmitters with detachable antenna), indicating the maximum permissible antenna gain (in dBi) and the required impedance for each antenna. The test report shall demonstrate the compliance of the transmitter with the limit for maximum equivalent isotropically radiated power (e.i.r.p.) specified in the applicable RSS, when the transmitter is equipped with any antenna type, selected from this list.

8.6.2 Result

PASS.

Note: ☑ Antenna use a permanently attached antenna which is not replaceable.
☐ Not using a standard antenna jack or electrical connector for antenna replacement
☐ The antenna has to be professionally installed (please provide method of installation)

Please refer to the attached document Internal Photos to show the antenna connector.

Detail of factor for radiated emission

Frequency(MHz)	Ant_F(dB)	Cab_L(dB)	Preamp(dB)	Correct Factor(dB)
0.009	20.6	0.03	\	20.63
0.15	20.7	0.1	\	20.8
1	20.9	0.15	\	21.05
10	20.1	0.28	\	20.38
30	18.8	0.45	\	19.25
30	11.7	0.62	27.9	-15.58
100	12.5	1.02	27.8	-14.28
300	12.9	1.91	27.5	-12.69
600	19.2	2.92	27	-4.88
800	21.1	3.54	26.6	-1.96
1000	22.3	4.17	26.2	0.27
1000	25.6	1.76	41.4	-14.04
3000	28.9	3.27	43.2	-11.03
5000	31.1	4.2	44.6	-9.3
8000	36.2	5.95	44.7	-2.55
10000	38.4	6.3	43.9	0.8
12000	38.5	7.14	42.3	3.34
15000	40.2	8.15	41.4	6.95
18000	45.4	9.02	41.3	13.12
18000	37.9	1.81	47.9	-8.19
21000	37.9	1.95	48.7	-8.85
25000	39.3	2.01	42.8	-1.49
28000	39.6	2.16	46.0	-4.24
31000	41.2	2.24	44.5	-1.06
34000	41.5	2.29	46.6	-2.81
37000	43.8	2.30	46.4	-0.3
40000	43.2	2.50	42.2	3.5

--------- END OF REPORT --------