# TEST REPORT

**Product Name : Wireless IP Camera**
**Model Number : SD8P, SD8, SD8T, SD8V**
**FCC ID : ZDESD8P**

Prepared for : ShenZhen Foscam Intelligent Technology Co., Ltd
Address : Room 902,Building 1B, Shenzhen International innovationValley, Xingke 1st Street, Nanshan District, Shenzhen,Guangdong, China, 518055.

Prepared by : EMTEK (DONGGUAN) Co., Ltd.
Address : -1&2/F.,Buiding 2,Zone A,Zhongda Marine Biotechnology Research and Development Base,N.9,Xincheng Avenue,Songshanhu High-technology Industrial Development Zone, Dongguan, Guangdong, China

TEL: +86-0769-22807078
FAX: +86-0769-22807079

Report Number : EDG2406070166E00802R
Date(s) of Tests : June 07, 2024 to August 22, 2024
Date of issue : August 22, 2024

# 1 TEST RESULT CERTIFICATION

| | | |
|---|---|---|
| Applicant | : | ShenZhen Foscam Intelligent Technology Co., Ltd |
| Address | : | Room 902,Building 1B, Shenzhen International innovationValley, Xingke 1st Street, Nanshan District, Shenzhen,Guangdong, China, 518055. |
| Manufacturer | : | ShenZhen Foscam Intelligent Technology Co., Ltd |
| Address | : | Room 902,Building 1B, Shenzhen International innovationValley, Xingke 1st Street, Nanshan District, Shenzhen,Guangdong, China, 518055. |
| Factory | : | ShenZhen Foscam Intelligent Technology Co., Ltd |
| Address | : | 701, 7th Floor, Building D, Guangming Port Intelligent Manufacturing Innovation Park, No. 8 Jinjun Road, Huangjiang Town, Dongguan, Guangdong, China, 523769 |
| EUT | : | Wireless IP Camera |
| Model Name | : | SD8P, SD8, SD8T, SD8V |
| Trademark | : | FOSCAM |

Measurement Procedure Used:

| APPLICABLE STANDARDS | |
|---|---|
| **STANDARD** | **TEST RESULT** |
| FCC 47 CFR Part 2, Subpart J<br>FCC 47 CFR Part 15, Subpart E | **PASS** |
| IC RSS-GEN, Issue 5(04-2018)+A1(03-2019)+A2(02-2021)<br>IC RSS-247 Issue 3(08-2023) | **PASS** |

The above equipment was tested by EMTEK (DONGGUAN) Co., Ltd. The test data, data evaluation, test procedures, and equipment configurations shown in this report were made in accordance with the procedures given in ANSI C63.10 (2013) and the energy emitted by the sample EUT tested as described in this report is in compliance with the requirements of FCC Rules Part 2, Part 15.407, IC RSS-247 Issue 2 and IC RSS-GEN, Issue 5.

The test results of this report relate only to the tested sample identified in this report.

Date of Test : June 07, 2024 to August 22, 2024

Prepared by : Warren Deng

Warren Deng /Editor

Reviewer : Tim Dong

Tim Dong /Supervisor

Approve & Authorized Signer : Sam Lv / Manager

# Modified History

| Version | Report No. | Revision Date | Summary |
|---|---|---|---|
| V1.0 | EDG2406070166E00802R | / | Original Report |
| | | | |
| | | | |

# TABLE OF CONTENTS

**1 TEST RESULT CERTIFICATION ..... 2**

**2 EUT TECHNICAL DESCRIPTION ..... 5**

**3 SUMMARY OF TEST RESULT ..... 6**

**4 TEST METHODOLOGY ..... 7**

4.1 GENERAL DESCRIPTION OF APPLIED STANDARDS ..... 7
4.2 MEASUREMENT EQUIPMENT USED ..... 7
4.3 DESCRIPTION OF TEST MODES ..... 7

**5 FACILITIES AND ACCREDITATIONS ..... 10**

5.1 FACILITIES ..... 10
5.2 EQUIPMENT ..... 10
5.3 LABORATORY ACCREDITATIONS AND LISTINGS ..... 10

**6 TEST SYSTEM UNCERTAINTY ..... 11**

**7 SETUP OF EQUIPMENT UNDER TEST ..... 12**

7.1 RADIO FREQUENCY TEST SETUP ..... 12
7.2 RADIO FREQUENCY TEST SETUP ..... 12
7.3 CONDUCTED EMISSION TEST SETUP ..... 14
7.4 BLOCK DIAGRAM CONFIGURATION OF TEST SYSTEM ..... 15
7.5 SUPPORT EQUIPMENT ..... 15

**8 TEST REQUIREMENTS ..... 16**

8.1 BANDWIDTH MEASUREMENT ..... 16
8.2 MAXIMUM CONDUCTED OUTPUT POWER ..... 33
8.3 MAXIMUM PEAK POWER DENSITY ..... 40
8.4 UNDESIRABLE RADIATED SPURIOUS EMISSION ..... 47
8.5 POWER LINE CONDUCTED EMISSIONS ..... 57
8.6 ANTENNA APPLICATION ..... 60

# 2 EUT TECHNICAL DESCRIPTION

| Characteristics | Description |
|---|---|
| **Product:** | Wireless IP Camera |
| **Model Number:** | SD8P, SD8, SD8T, SD8V<br>(The Model: SD8P is the same as the Model: SD8, SD8T, SD8V in hardware aspect. The difference in model number serves as marketing strategy.) |
| **Sample Number:** | 2# |
| **Wifi Type:** | Wifi 5G with 5725MHz-5850MHz Band |
| **WLAN Supported:** | 802.11a/n |
| **Data Rate :** | 802.11a: 54/48/36/24/18/12/9/6Mbps<br>802.11n: MCS0-MCS15 |
| **Modulation:** | OFDM with BPSK/QPSK/16QAM/64QAM for 802.11a/n |
| **Frequency Range:** | UNII-3 with 5725MHz-5850MHz Band<br>5745-5825MHz for 802.11a/n(HT20);<br>5755-5795MHz for 802.11n(HT40); |
| **TPC Function:** | Not Applicable |
| **Antenna Type:** | External Antenna |
| **Antenna Gain:** | 4.36 dBi |
| **Transmit Power:** | UNII-3 Band: 12.69 dBm(0.018578 W) |
| **Power Supply :** | DC 12V 2A from Adapter |
| **Hardware version:** | 1.0 |
| **Date of Received:** | June 07, 2024 |
| **Temperature Range:** | 0°C ~ +40°C |

***Note:*** *For more details, please refer to the User's manual of the EUT.*

# 3 SUMMARY OF TEST RESULT

| FCC Part Clause | IC Part Clause | Test Parameter | Verdict | Remark |
|---|---|---|---|---|
| 15.407 (a)<br>15.407 (e)<br>2.1049 | RSS-247 6.2<br>RSS-Gen 6.7 | 99% , 6dB and 26dB Bandwidth | PASS | |
| 15.407 (a) | RSS-247 6.2 | Maximum Conducted Output Power | PASS | |
| 15.407 (a) | RSS-247 6.2 | Peak Power Spectral Density | PASS | |
| 15.407 (b)<br>15.209<br>15.205 | RSS-247 6.2<br>RSS-Gen 8.9<br>RSS-Gen 8.10<br>RSS-Gen 6.13 | Radiated Spurious Emission | PASS | |
| 15.207 | RSS-Gen 8.8 | Power Line Conducted Emission | PASS | |
| 15.407(a)<br>15.203 | RSS-Gen 6.8 | Antenna Application | PASS | |
| NOTE1: N/A (Not Applicable)<br>NOTE2: According to FCC OET KDB 789033, the report use radiated measurements in the restricted frequency bands. In addition, the radiated test is also performed to ensure the emissions emanating from the device cabinet also comply with the applicable limits. | | | | |

RELATED SUBMITTAL(S) / GRANT(S):

This submittal(s) (test report) is intended for **FCC ID: ZDESD8P** filing to comply with Section 15.407 of the FCC Part 15, Subpart E Rules.

# 4 TEST METHODOLOGY

## 4.1 GENERAL DESCRIPTION OF APPLIED STANDARDS

According to its specifications, the EUT must comply with the requirements of the following standards:
FCC 47 CFR Part 2, Subpart J
FCC 47 CFR Part 15, Subpart E
IC RSS-GEN, Issue 5(04-2018)+A1(03-2019)+A2(02-2021)
IC RSS-247 Issue 3(08-2023)
FCC KDB 662911 D01 Multiple Transmitter Output v02r01
FCC KDB 789033 D2 General UNII Test Procedures New Rules v02r01
MEASUREMENT EQUIPMENT USED**Conducted Emission Test Equipment**

| Equipment | Manufacturer | Model No. | Serial No. | Last Cal. | Cal. Interval |
|---|---|---|---|---|---|
| EMI Test Receiver | Rohde&Schwarz | ESCI | 100137 | 2024/4/29 | 1Year |
| Signal Analyzer | R&S | FSV30 | 103039 | 2024/4/28 | 1 Year |
| AMN | Rohde&Schwarz | ENV216 | 101209 | 2024/4/28 | 1Year |
| AMN | Rohde&Schwarz | ENV216 | 100017 | 2024/4/28 | 1Year |
| RF Switching Unit | CDS | RSU-M2 | 38401 | 2024/4/28 | 1Year |
| AMN | Schwarzbeck | NNLK8121 | 8121-641 | 2024/4/28 | 1Year |
| AMN | Rohde&Schwarz | ESH3-Z6 | 101101 | 2024/4/28 | 1Year |
| AMN | Rohde&Schwarz | ESH3-Z6 | 101102 | 2024/4/28 | 1Year |
| Power Splitters & Dividers | Weinschel Associates | WA1506A | A1066 | 2024/4/28 | 1Year |
| Current Probe | FCC | F-52 | 8377 | 2024/4/28 | 1Year |
| Passive voltage probe | Rohde&Schwarz | ESH2-Z3 | 100122 | 2024/4/28 | 1Year |

**For Spurious Emissions Test**

| Equipment | Manufacturer | Model No. | Serial No. | Last Cal. | Cal. Interval |
|---|---|---|---|---|---|
| EMI Test Receiver | Rohde&Schwarz | ESCI | 101415 | 2024/4/28 | 1Year |
| Signal Analyzer | R&S | FSV30 | 103039 | 2024/4/28 | 1 Year |
| Bi-log Hybrid Antenna | Schwarzbeck | VULB9163 | 141 | 2024/5/5 | 1Year |
| Pre-Amplifie | HP | 8447F | OPTH64 | 2024/4/28 | 1 Year |
| Signal Analyzer | R&S | FSV30 | 103039 | 2024/4/28 | 1 Year |
| Horn Antenna | Schwarzbeck | BBHA9120D | 1272 | 2024/5/5 | 1Year |
| Horn Antenna | Schwarzbeck | BBHA9170 | 9170-567 | 2024/5/5 | 1Year |
| Pre-Amplifie | LUNAR EM | PM1-18-40 | J10100000081 | 2024/4/28 | 1Year |
| Loop antenna | Schwarzbeck | FMZB1519 | 1519-012 | 2024/5/5 | 1Year |

**For other test items:**

| Equipment | Manufacturer | Model No. | Serial No. | Last Cal. | Cal. Interval |
|---|---|---|---|---|---|
| Wireless Connectivity Tester | R&S | CMW270 | 102543 | 2024/4/29 | 1Year |
| Automatic Control Unit | Tonscend | JS0806-2 | 21I8060480 | 2024/4/29 | 1Year |
| Signal Analyzer | KEYSIGHT | N9010B | MY60242456 | 2024/4/29 | 1Year |
| Analog Signal Generator | KEYSIGHT | N5173B | MY61252625 | 2024/4/29 | 1Year |
| UP/DOWN-Converter | R&S | CMW-Z800A | 100274 | 2024/4/29 | 1Year |
| Vector Signal Generator | KEYSIGHT | N5182B | MY61252674 | 2024/4/29 | 1Year |
| Frequency Extender | KEYSIGHT | N5182BX07 | MY59362541 | 2024/4/29 | 1Year |
| Temperature&Humidity test chamber | ESPEC | EL-02KA | 12107166 | 2024/4/29 | 1 Year |

***Remark:*** *Each piece of equipment is scheduled for calibration once a year.*

## 4.2 DESCRIPTION OF TEST MODES

The EUT has been tested under its typical operating condition.
The EUT configuration for testing is installed on RF field strength measurement to meet the Commissions requirement and operating in a manner which intends to maximize its emission characteristics in a continuous normal application.
The Transmitter was operated in the normal operating mode. The TX frequency was fixed which was for the purpose of the measurements.
Test of channel included the lowest and middle and highest frequency to perform the test, then record on this report.
Those data rates (802.11a: 54 Mbps; 802.11n(HT20): MCS0; 802.11ac(VHT20): MCS0; 802.11n(HT40): MCS0; 802.11ac(VHT40): MCS0; 802.11ac(VHT80): MCS0;) were used for all test.

Pre-defined engineering program for regulatory testing used to control the EUT for staying in continuous transmitting and receiving mode is programmed.

**Wifi 5G with U-NII -3**

Frequency and Channel list for 802.11a, 802.11n (HT20), 802.11ac (VHT20):

| Channel | Frequency (MHz) | Channel | Frequency (MHz) | Channel | Frequency (MHz) |
|---|---|---|---|---|---|
| 149 | 5745 | 157 | 5785 | 165 | 5825 |
| 153 | 5765 | 161 | 5805 | | |

Frequency and Channel list for 802.11n (HT40), 802.11ac (VHT40):

| Channel | Frequency (MHz) | Channel | Frequency (MHz) | Channel | Frequency (MHz) |
|---|---|---|---|---|---|
| 151 | 5755 | 159 | 5795 | | |

Frequency and Channel list for 802.11ac(VHT80) :

| Channel | Frequency (MHz) | Channel | Frequency (MHz) | Channel | Frequency (MHz) |
|---|---|---|---|---|---|
| 155 | 5775 | | | | |
| | | | | | |

Test Frequency and Channel for 802.11a, 802.11n (HT20), 802.11ac (VHT20):

| Lowest Frequency | | Middle Frequency | | Highest Frequency | |
|---|---|---|---|---|---|
| Channel | Frequency (MHz) | Channel | Frequency (MHz) | Channel | Frequency (MHz) |
| 149 | 5745 | 157 | 5785 | 165 | 5825 |

Test Frequency and channel for 802.11n (HT40):

| Lowest Frequency | | Middle Frequency | | Highest Frequency | |
|---|---|---|---|---|---|
| Channel | Frequency (MHz) | Channel | Frequency (MHz) | Channel | Frequency (MHz) |
| 151 | 5755 | N/A | N/A | 159 | 5795 |

Test Frequency and channel for 802.11ac(VHT80):

| Lowest Frequency | | Middle Frequency | | Highest Frequency | |
|---|---|---|---|---|---|
| Channel | Frequency (MHz) | Channel | Frequency (MHz) | Channel | Frequency (MHz) |
| 155 | 5775 | | | | |

Multi-antenna correlation:

| | |
|---|---|
| ☐ | Transmit Signals are Correlated |
| | Directional gain = 10 log[($10^{G1/20}$ + $10^{G2/20}$ + … + $10^{GN/20}$)2 /$N_{ANT}$] dBi |
| ☐ | All Transmit Signals are Completely Uncorrelated |
| | Directional gain = 10 log[($10^{G1/10}$ + $10^{G2/10}$ + … + $10^{GN/10}$)/$N_{ANT}$] dBi |

# 5 FACILITIES AND ACCREDITATIONS

## 5.1 FACILITIES

All measurement facilities used to collect the measurement data are located at:

EMTEK (DONGGUAN) Co., Ltd.

-1&2/F.,Buiding 2,Zone A,Zhongda Marine Biotechnology Research and Development Base,N.9,Xincheng Avenue,Songshanhu High-technology Industrial Development Zone, Dongguan, Guangdong, China

## 5.2 EQUIPMENT

Radiated emissions are measured with one or more of the following types of linearly polarized antennas: tuned dipole, biconical, log periodic, bi-log, and/or ridged waveguide, horn. Spectrum analyzers with preselectors and quasi-peak detectors are used to perform radiated measurements.

Conducted emissions are measured with Line Impedance Stabilization Networks and EMI Test Receivers.

Calibrated wideband preamplifiers, coaxial cables, and coaxial attenuators are also used for making measurements.

All receiving equipment conforms to CISPR Publication 16-1, “Radio Interference Measuring Apparatus and Measurement Methods.”

## 5.3 LABORATORY ACCREDITATIONS AND LISTINGS

| Site Description | | |
|---|---|---|
| EMC Lab. | : | Accredited by CNAS, 2024.07.06<br>The certificate is valid until 2030.07.05<br>The Laboratory has been assessed and proved to be in compliance with CNAS/CL01:2018<br>The Certificate Registration Number is L3150<br><br>Accredited by FCC<br>Designation Number: CN1300<br>Test Firm Registration Number: 945551<br><br>Accredited by A2LA, April 05, 2021<br>The Certificate Registration Number is 4321.02<br><br>Accredited by Industry Canada<br>The Certificate Registration Number is CN0109 |
| Name of Firm | : | EMTEK (DONGGUAN) Co., Ltd. |
| Site Location | : | -1&2/F.,Building 2, Zone A, Zhongda Marine Biotechnology Research and Development Base, No.9, Xincheng Avenue, Songshanhu High-technology Industrial Development Zone, Dongguan, Guangdong, China |

# 6 TEST SYSTEM UNCERTAINTY

The following measurement uncertainty levels have been estimated for tests performed on the apparatus:

| Test Parameter | Measurement Uncertainty |
|---|---|
| Radio Frequency | ±1x10^-5 |
| Maximum Peak Output Power Test | ±1.0dB |
| Conducted Emissions Test | ±2.0dB |
| Radiated Emission Test | ±2.0dB |
| Power Density | ±2.0dB |
| Occupied Bandwidth Test | ±1.0dB |
| Band Edge Test | ±3dB |
| All emission, radiated | ±3dB |
| Antenna Port Emission | ±3dB |
| Temperature | ±0.5℃ |
| Humidity | ±3% |

Measurement Uncertainty for a level of Confidence of 95%

# 7 SETUP OF EQUIPMENT UNDER TEST

## 7.1 RADIO FREQUENCY TEST SETUP

The WLAN component's antenna ports(s) of the EUT are connected to the measurement instrument per an appropriate attenuator. The EUT is controlled by PC/software to emit the specified signals for the purpose of measurements.

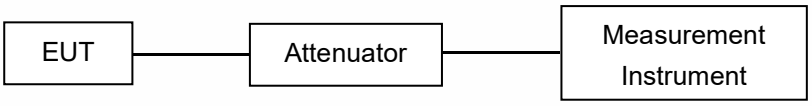


## 7.2 RADIO FREQUENCY TEST SETUP

The test site semi-anechoic chamber has met the requirement of NSA tolerance 4 dB according to the standards: ANSI C63.10. The test distance is 3m.The setup is according to the requirements in Section 13.1.4.1 of ANSI C63.10-2013 and CAN/CSA-CEI/IEC CISPR 22.

Below 30MHz：
The EUT is placed on a turntable 0.8 meters above the ground in the chamber, 3 meter away from the antenna (loop antenna). The Antenna should be positioned with its plane vertical at the specified distance from the EUT and rotated about its vertical axis for maximum response at each azimuth about the EUT. The center of the loop shall be 1 m above the ground. For certain applications, the loop antenna plane may also need to be positioned horizontally at the specified distance from the EUT.

Above 30MHz：
The EUT is placed on a turntable 0.8 meters above the ground in the chamber, 3 meter away from the antenna. The maximal emission value is acquired by adjusting the antenna height, polarisation and turntable azimuth. Normally, the height range of antenna is 1 m to 4 m, the azimuth range of turntable is 0° to 360°, and the receive antenna has two polarizations Vertical (V) and Horizontal (H).

Above 1GHz：
(Note: the FCC's permission to use 1.5m as an alternative per TCBC Conf call of Dec. 2, 2014.)
The EUT is placed on a turntable 1.5 meters above the ground in the chamber, 3 meter away from the antenna. The maximal emission value is acquired by adjusting the antenna height, polarisation and turntable azimuth. Normally, the height range of antenna is 1 m to 4 m, the azimuth range of turntable is 0° to 360°, and the receive antenna has two polarizations Vertical (V) and Horizontal (H).

(a) Radiated Emission Test Set-Up, Frequency Below 30MHz

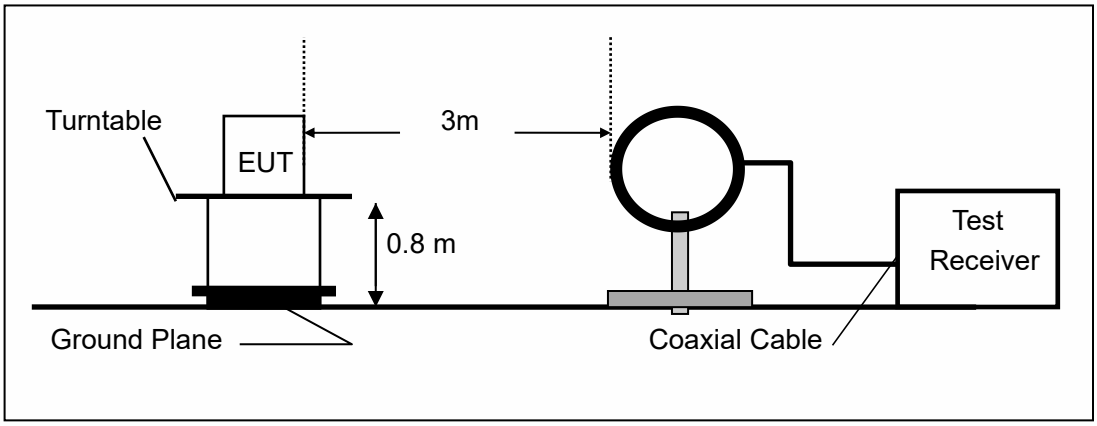

(b) Radiated Emission Test Set-Up, Frequency Below 1000MHz

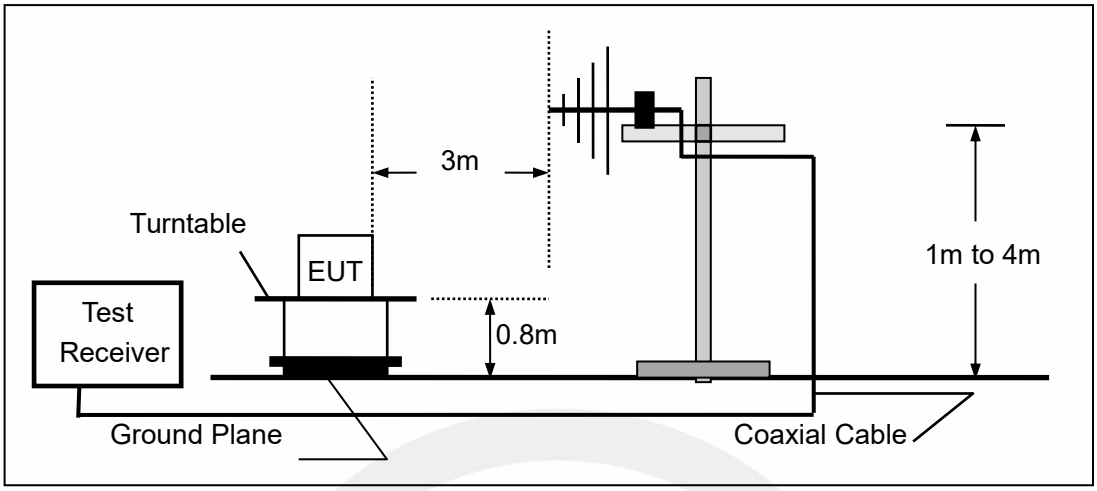


(c) Radiated Emission Test Set-Up, Frequency above 1000MHz

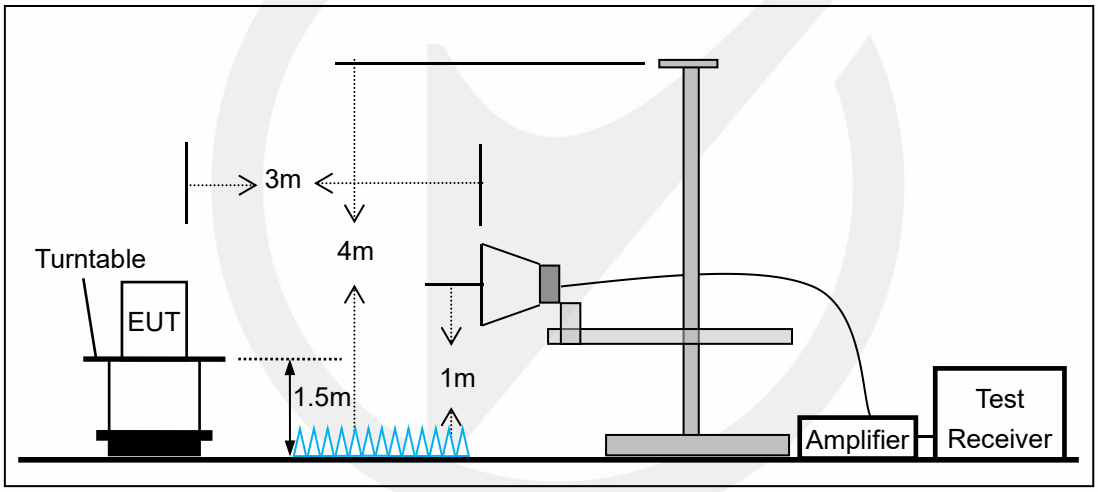

## 7.3 CONDUCTED EMISSION TEST SETUP

The mains cable of the EUT (maybe per AC/DC Adapter) must be connected to LISN. The LISN shall be placed 0.8 m from the boundary of EUT and bonded to a ground reference plane for LISN mounted on top of the ground reference plane. This distance is between the closest points of the LISN and the EUT. All other units of the EUT and associated equipment shall be at least 0.8m from the LISN.

Ground connections, where required for safety purposes, shall be connected to the reference ground point of the LISN and, where not otherwise provided or specified by the manufacturer, shall be of same length as the mains cable and run parallel to the mains connection at a separation distance of not more than 0.1 m.

According to the requirements in Section 13.1.4.1 of ANSI C63.10-2013 Conducted emissions from the EUT measured in the frequency range between 0.15 MHz and 30 MHz using CISPR Quasi-Peak and average detector mode.

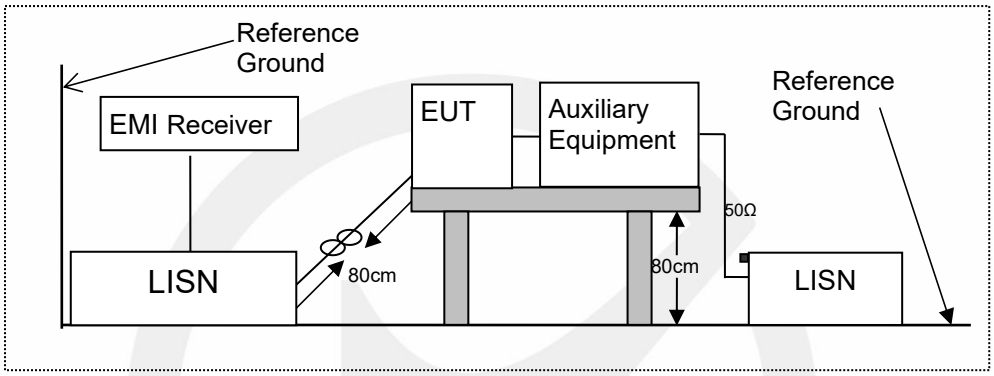

## 7.4 BLOCK DIAGRAM CONFIGURATION OF TEST SYSTEM

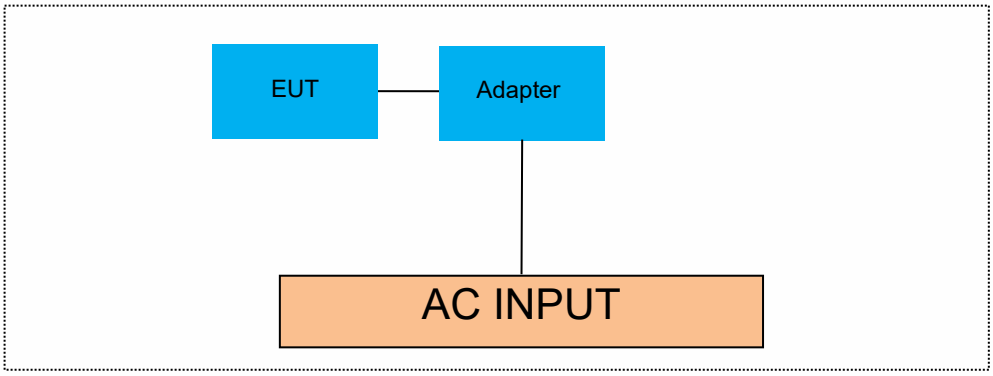


## 7.5 SUPPORT EQUIPMENT

| Equipment List and Details | | | |
|---|---|---|---|
| Description | Manufacturer | Model | Serial Number |
| / | / | / | / |

| **Auxiliary Cable List and Details** | | | |
|---|---|---|---|
| Cable Description | Length (m) | Shielded/Unshielded | With / Without Ferrite |
| AC ADAPTER | ShenZhen Foscam Intelligent Technology Co., Ltd | SAW30A-120-2000 U | / |

| **Auxiliary Equipment List and Details** | | | |
|---|---|---|---|
| Description | Manufacturer | Model | Serial Number |
| Notebook | Lenovo | E46L | 11S168003748Z0LR06E0HG |

**Notes:**

*1.* All the equipment/cables were placed in the worst-case configuration to maximize the emission during the test.

*2.* Grounding was established in accordance with the manufacturer's requirements and conditions for the intended use.

# 8 TEST REQUIREMENTS

## 8.1 BANDWIDTH MEASUREMENT

### 8.1.1 Applicable Standard

According to FCC Part 15.407(a)(1) for UNII Band I
According to FCC Part 15.407(a)(3) for UNII Band III
According to 789033 D02 Section II(C)
According to 789033 D02 Section II(D)
According to RSS-Gen 6.6, RSS 247 6.2

### 8.1.2 Conformance Limit

The 26dB bandwidth is used to determine the conducted power limits.
Within the 5.725-5.85 GHz band, the minimum 6 dB bandwidth of U-NII devices shall be at least 500 kHz.

### 8.1.3 Test Configuration

Test according to clause 7.1 radio frequency test setup

### 8.1.4 Test Procedure

According to 789033 D02 v02r01 section C&D, the following is the measurement procedure.

1. Emission Bandwidth (EBW)
a) Set RBW = approximately 1% of the emission bandwidth.
b) Set the VBW > RBW.
c) Detector = Peak.
d) Trace mode = max hold.
e) Measure the maximum width of the emission that is 26 dB down from the maximum of the emission. Compare this with the RBW setting of the analyzer. Readjust RBW and repeat measurement as needed until the RBW/EBW ratio is approximately 1%.

2. Minimum Emission Bandwidth for the band 5.725-5.85 GHz
Section 15.407(e) specifies the minimum 6 dB emission bandwidth of at least 500 KHz for the band 5.715-5.85 GHz. The following procedure shall be used for measuring this bandwidth:
a) Set RBW = 100 kHz.
b) Set the video bandwidth (VBW) ⩾ 3 × RBW.
c) Detector = Peak.
d) Trace mode = max hold.
e) Sweep = auto couple.
f) Allow the trace to stabilize.
g) Measure the maximum width of the emission that is constrained by the frequencies associated with the two outermost amplitude points (upper and lower frequencies) that are attenuated by 6 dB relative to the maximum level measured in the fundamental emission.
Note: The automatic bandwidth measurement capability of a spectrum analyzer or EMI receiver may be employed if it implements the functionality described above.

D. 99 Percent Occupied Bandwidth
The 99-percent occupied bandwidth is the frequency bandwidth such that, below its lower and above its upper frequency limits, the mean powers are each equal to 0.5 % of the total mean power of the given emission. Measurement of the 99-percent occupied bandwidth is required only as a condition for using the optional band-edge measurement techniques described in section II.G.3.d). Measurements of 99-percent occupied bandwidth may also optionally be used in lieu of the EBW to 789033 D02 v01r02 General UNII Test Procedures New Rules v01 define the minimum frequency range over which the spectrum is integrated when measuring maximum conducted output power as described in section II.E. However, the EBW must be measured to determine bandwidth dependent limits on maximum conducted output power in accordance with 15.407(a).

The following procedure shall be used for measuring (99 %) power bandwidth:
1. Set center frequency to the nominal EUT channel center frequency.
2. Set span = 1.5 times to 5.0 times the OBW.
3. Set RBW = 1 % to 5 % of the OBW
4. Set VBW ≥ 3 • RBW
5. Video averaging is not permitted. Where practical, a sample detection and single sweep mode shall be used. Otherwise, peak detection and max hold mode (until the trace stabilizes) shall be used.
6. Use the 99 % power bandwidth function of the instrument (if available).
7. If the instrument does not have a 99 % power bandwidth function, the trace data points are recovered and directly summed in power units. The recovered amplitude data points, beginning at the lowest frequency, are placed in a running sum until 0.5 % of the total is reached; that frequency is recorded as the lower frequency. The process is repeated until 99.5 % of the total is reached; that frequency is recorded as the upper frequency. The 99% occupied bandwidth is the difference between these two frequencies.

8.1.5 Test Results

| | |
|---|---|
| Temperature: | 25˚C |
| Relative Humidity: | 45% |
| ATM Pressure: | 1011 mbar |

Note: N/A

| TestMode | Antenna | Frequency[MHz] | 26db EBW [MHz] | FL[MHz] | FH[MHz] | Limit[MHz] | Verdict |
|---|---|---|---|---|---|---|---|
| 11A | Ant1 | 5745 | 19.240 | 5735.320 | 5754.560 | --- | --- |
| 11A | Ant1 | 5785 | 18.960 | 5775.480 | 5794.440 | --- | --- |
| 11A | Ant1 | 5825 | 19.160 | 5815.400 | 5834.560 | --- | --- |
| 11N20SISO | Ant1 | 5745 | 19.960 | 5734.920 | 5754.880 | --- | --- |
| 11N20SISO | Ant1 | 5785 | 20.360 | 5774.880 | 5795.240 | --- | --- |
| 11N20SISO | Ant1 | 5825 | 20.120 | 5814.800 | 5834.920 | --- | --- |
| 11N40SISO | Ant1 | 5755 | 37.760 | 5736.040 | 5773.800 | --- | --- |
| 11N40SISO | Ant1 | 5795 | 38.000 | 5775.960 | 5813.960 | --- | --- |

11A-Ant1-5745

11A-Ant1-5785

11A-Ant1-5825

11N20SISO-Ant1-5745

11N20SISO-Ant1-5785

11N20SISO-Ant1-5825

11N40SISO-Ant1-5755

11N40SISO-Ant1-5795

| TestMode | Antenna | Frequency[MHz] | OCB [MHz] | FL[MHz] | FH[MHz] | Limit[MHz] | Verdict |
|---|---|---|---|---|---|---|---|
| 11A | Ant1 | 5745 | 16.449 | 5736.7257 | 5753.1747 | --- | --- |
| 11A | Ant1 | 5785 | 16.477 | 5776.7348 | 5793.2118 | --- | --- |
| 11A | Ant1 | 5825 | 16.469 | 5816.7365 | 5833.2055 | --- | --- |
| 11N20SISO | Ant1 | 5745 | 17.530 | 5736.1654 | 5753.6954 | --- | --- |
| 11N20SISO | Ant1 | 5785 | 17.558 | 5776.1638 | 5793.7218 | --- | --- |
| 11N20SISO | Ant1 | 5825 | 17.550 | 5816.1790 | 5833.7290 | --- | --- |
| 11N40SISO | Ant1 | 5755 | 35.239 | 5737.2502 | 5772.4892 | --- | --- |
| 11N40SISO | Ant1 | 5795 | 35.305 | 5777.2752 | 5812.5802 | --- | --- |

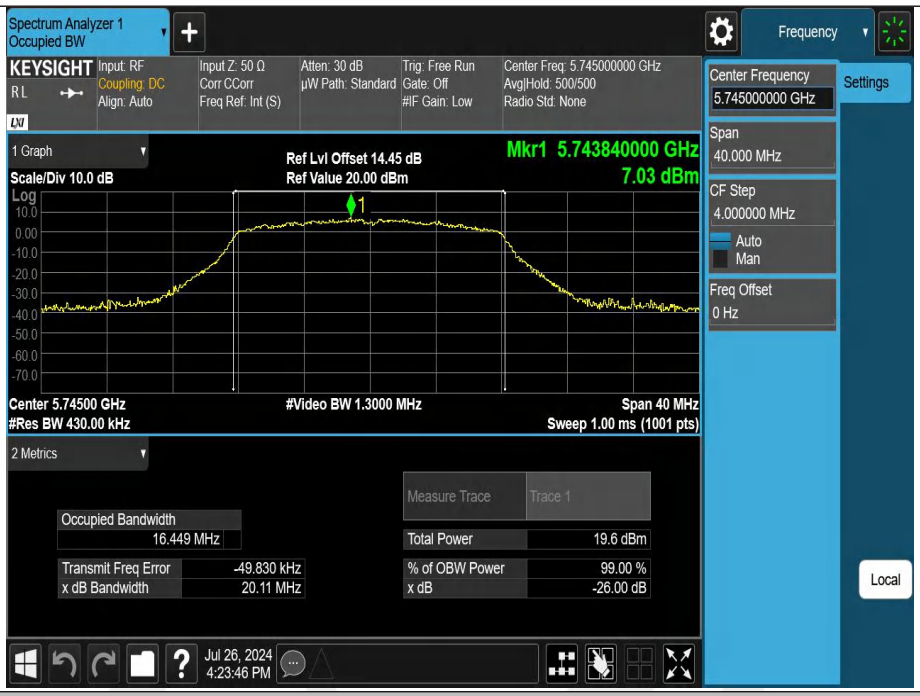


11A-Ant1-5745

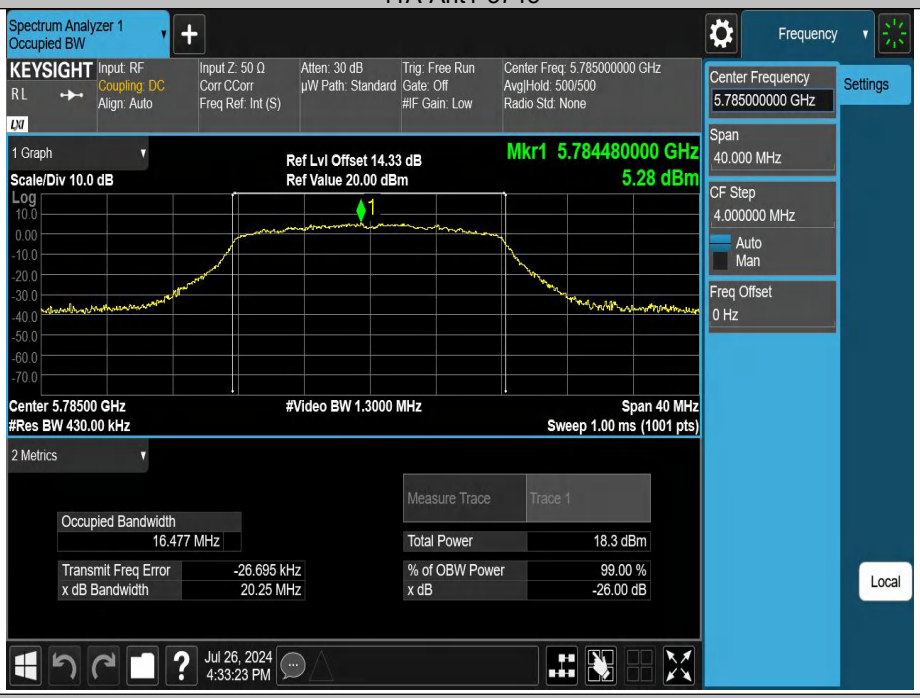


11A-Ant1-5785

11A-Ant1-5825

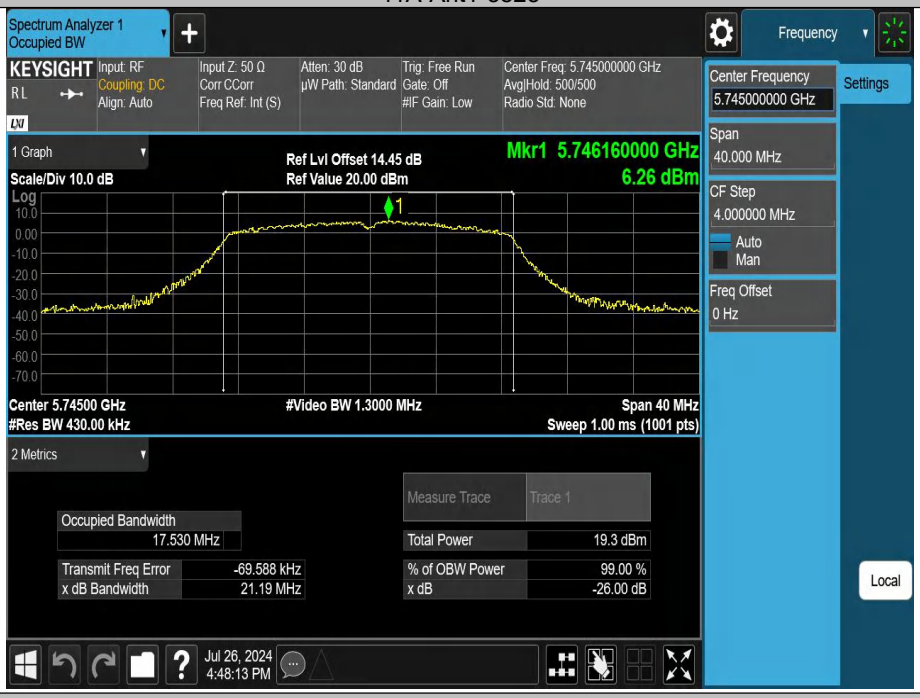


11N20SISO-Ant1-5745

11N20SISO-Ant1-5785

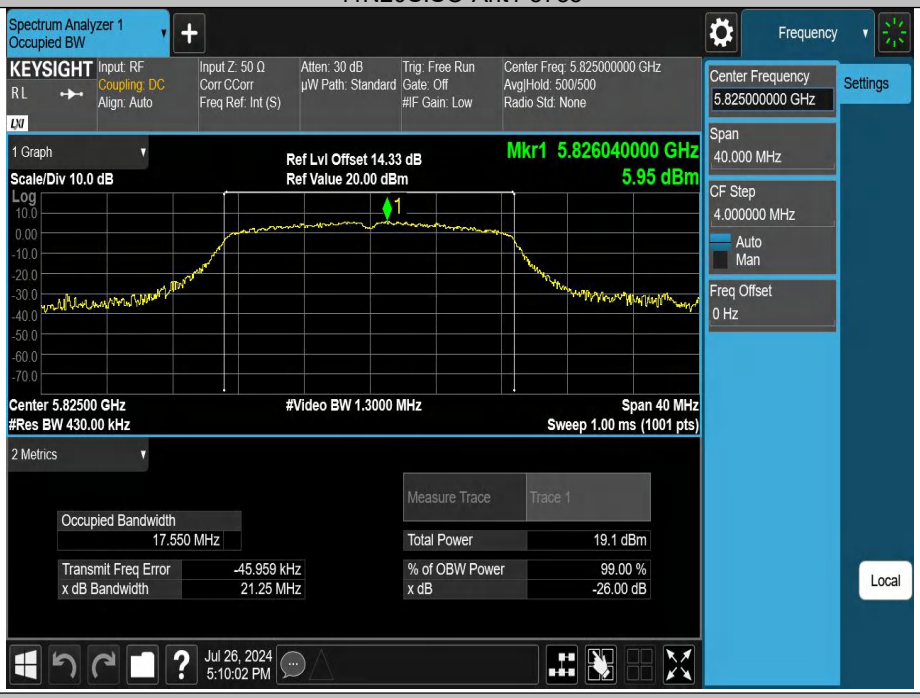


11N20SISO-Ant1-5825

11N40SISO-Ant1-5755

11N40SISO-Ant1-5795

| TestMode | Antenna | Frequency[MHz] | 6db EBW [MHz] | FL[MHz] | FH[MHz] | Limit[MHz] | Verdict |
|---|---|---|---|---|---|---|---|
| 11A | Ant1 | 5745 | 12.240 | 5737.400 | 5749.640 | 0.5 | PASS |
| 11A | Ant1 | 5785 | 15.080 | 5777.400 | 5792.480 | 0.5 | PASS |
| 11A | Ant1 | 5825 | 13.400 | 5818.440 | 5831.840 | 0.5 | PASS |
| 11N20SISO | Ant1 | 5745 | 14.960 | 5737.520 | 5752.480 | 0.5 | PASS |
| 11N20SISO | Ant1 | 5785 | 14.440 | 5778.280 | 5792.720 | 0.5 | PASS |
| 11N20SISO | Ant1 | 5825 | 14.080 | 5817.400 | 5831.480 | 0.5 | PASS |
| 11N40SISO | Ant1 | 5755 | 28.800 | 5739.960 | 5768.760 | 0.5 | PASS |
| 11N40SISO | Ant1 | 5795 | 28.880 | 5779.880 | 5808.760 | 0.5 | PASS |

11A-Ant1-5745-PASS

11A-Ant1-5785-PASS

11A-Ant1-5825-PASS

11N20SISO-Ant1-5745-PASS

11N20SISO-Ant1-5785-PASS

11N20SISO-Ant1-5825-PASS

11N40SISO-Ant1-5755-PASS

11N40SISO-Ant1-5795-PASS

## 8.2 MAXIMUM CONDUCTED OUTPUT POWER

### 8.2.1 Applicable Standard

According to FCC Part 15.407(a)(1) for UNII Band I
According to FCC Part 15.407(a)(2) for UNII Band II-A and UNII Band II-C
According to FCC Part 15.407(a)(3) for UNII Band III
According to 789033 D02 Section II(E)
According to RSS 247 6.2

### 8.2.2 Conformance Limit

**FCC Limit:**

■ For the band 5.15-5.25 GHz

(a) (1) (i) For an outdoor access point, the maximum conducted output power over the frequency band of operation shall not exceed 1 W provided the maximum antenna gain does not exceed 6 dBi. If transmitting antennas of directional gain greater than 6 dBi are used, the maximum conducted output power shall be reduced by the amount in dB that the directional gain of the antenna exceeds 6 dBi. The maximum e.i.r.p. at any elevation angle above 30 degrees as measured from the horizon must not exceed 125 mW (21 dBm).

(a) (1) (ii) For an indoor access point, the maximum conducted output power over the frequency band of operation shall not exceed 1 W provided the maximum antenna gain does not exceed 6 dBi. If transmitting antennas of directional gain greater than 6 dBi are used, the maximum conducted output power shall be reduced by the amount in dB that the directional gain of the antenna exceeds 6 dBi.

(a) (1) (iii) For fixed point-to-point access points, the maximum conducted output power over the frequency band of operation shall not exceed 1 W. Fixed point-to-point U-NII devices may employ antennas with directional gain up to 23 dBi without any corresponding reduction in the maximum conducted output power. For fixed point-to-point transmitters that employ a directional antenna gain greater than 23 dBi, a 1 dB reduction in maximum conducted output power is required for each 1 dB of antenna gain in excess of 23 dBi. Fixed, point-to-point operations exclude the use of point-to-multipoint systems, omnidirectional applications, and multiple collocated transmitters transmitting the same information. The operator of the U-NII device, or if the equipment is professionally installed, the installer, is responsible for ensuring that systems employing high gain directional antennas are used exclusively for fixed, point-to-point operations.

(a) (1) (iv) For client devices, the maximum conducted output power over the frequency band of operation shall not exceed 250 mW provided the maximum antenna gain does not exceed 6 dBi. If transmitting antennas of directional gain greater than 6 dBi are used, the maximum conducted output power shall be reduced by the amount in dB that the directional gain of the antenna exceeds 6 dBi.

■ For the 5.25-5.35 GHz and 5.47-5.725 GHz bands

(a) (2) The maximum conducted output power over the frequency bands of operation shall not exceed the lesser of 250 mW or 11 dBm + 10 log B, where B is the 26 dB emission bandwidth in megahertz. If transmitting antennas of directional gain greater than 6 dBi are used, the maximum conducted output power shall be reduced by the amount in dB that the directional gain of the antenna exceeds 6 dBi.

■ For the band 5.725-5.85 GHz

(a) (3) The maximum conducted output power over the frequency band of operation shall not exceed 1 W. If transmitting antennas of directional gain greater than 6 dBi are used, the maximum conducted output power shall be reduced by the amount in dB that the directional gain of the antenna exceeds 6 dBi. However, fixed point-to-point U-NII devices operating in this band may employ transmitting antennas with directional gain greater than 6 dBi without any corresponding reduction in transmitter conducted power. Fixed, point-to-point operations exclude the use of point-to-multipoint systems, omnidirectional applications, and multiple collocated transmitters transmitting the same information. The operator of the U-NII device, or if the equipment is professionally installed, the installer, is responsible for ensuring that systems employing high gain directional antennas are used exclusively for fixed, point-to-point operations

**IC Limit:**

■ Frequency band 5150-5250 MHz

The maximum e.i.r.p. shall not exceed 200 mW or 10 + 10 $\log_{10}$B, dBm, whichever power is less. B is the 99% emission bandwidth in megahertz.

■ Frequency band 5250-5350 MHz

The maximum conducted output power shall not exceed 250 mW or 11 + 10 $\log_{10}$B, dBm, whichever is less.

The maximum e.i.r.p. shall not exceed 1.0 W or 17 + 10 $\log_{10}$B, dBm, whichever is less. B is the 99% emission bandwidth in megahertz. Note that devices with a maximum e.i.r.p. greater than 500 mW shall implement TPC in order to have the capability to operate at least 6 dB below the maximum permitted e.i.r.p. of 1 W.

■ Frequency bands 5470-5600 MHz and 5650-5725 MHz

The maximum conducted output power shall not exceed 250 mW or 11 + 10 $\log_{10}$B, dBm, whichever is less.

The maximum e.i.r.p. shall not exceed 1.0 W or 17 + 10 $\log_{10}$B, dBm, whichever is less. B is the 99% emission bandwidth in megahertz. Note that devices with a maximum e.i.r.p. greater than 500 mW shall implement TPC in order to have the capability to operate at least 6 dB below the maximum permitted e.i.r.p. of 1 W.

■ Frequency band 5725-5850 MHz

The maximum conducted output power shall not exceed 1 W. If transmitting antennas of directional gain greater than 6 dBi are used, the maximum conducted output power shall be reduced by the amount in dB that the directional gain of the antenna exceeds 6 dBi. However, fixed point-to-point devices operating in this band may employ transmitting antennas with directional gain greater than 6 dBi without any corresponding reduction in transmitter conducted power. Fixed point-to-point operations exclude the use of point-to-multipoint systems, omnidirectional applications and multiple collocated transmitters transmitting the same information.

### 8.2.3 Test Configuration

Test according to clause 6.1 radio frequency test setup

### 8.2.4 Test Procedure

The maximum average conducted output power can be measured using Method PM-G (Measurement using a gated RF average power meter):

Measurements may be performed using a wideband gated RF power meter provided that the gate parameters are adjusted such that the power is measured only when the EUT is transmitting at its maximum power control level. Since the measurement is made only during the ON time of the transmitter, no duty cycle correction factor is required.

a. The Transmitter output (antenna port) was connected to the power meter.
b. Turn on the EUT and power meter and then record the power value.
c. Repeat above procedures on all channels needed to be tested.

### 8.2.5 Test Results

| | |
|---|---|
| Temperature: | 25 °C |
| Relative Humidity: | 45% |
| ATM Pressure: | 1011 mbar |

Note: N/A

| Test Mode | Antenna | Frequency[MHz] | TPC Mode | Channel Powert [dBm] | Limit [dBm] | Gain [dBi] | EIRP [dBm] | EIRP Limit [dBm] | Verdict |
|---|---|---|---|---|---|---|---|---|---|
| 11A | Ant1 | 5745 | NA | 12.69 | ≤30.00 | 4.36 | 17.05 | --- | PASS |
| 11A | Ant1 | 5785 | NA | 11.36 | ≤30.00 | 4.36 | 15.72 | --- | PASS |
| 11A | Ant1 | 5825 | NA | 12.45 | ≤30.00 | 4.36 | 16.81 | --- | PASS |
| 11N20SISO | Ant1 | 5745 | NA | 12.51 | ≤30.00 | 4.36 | 16.87 | --- | PASS |
| 11N20SISO | Ant1 | 5785 | NA | 11.21 | ≤30.00 | 4.36 | 15.57 | --- | PASS |
| 11N20SISO | Ant1 | 5825 | NA | 12.33 | ≤30.00 | 4.36 | 16.69 | --- | PASS |
| 11N40SISO | Ant1 | 5755 | NA | 11.89 | ≤30.00 | 4.36 | 16.25 | --- | PASS |
| 11N40SISO | Ant1 | 5795 | NA | 11.02 | ≤30.00 | 4.36 | 15.38 | --- | PASS |

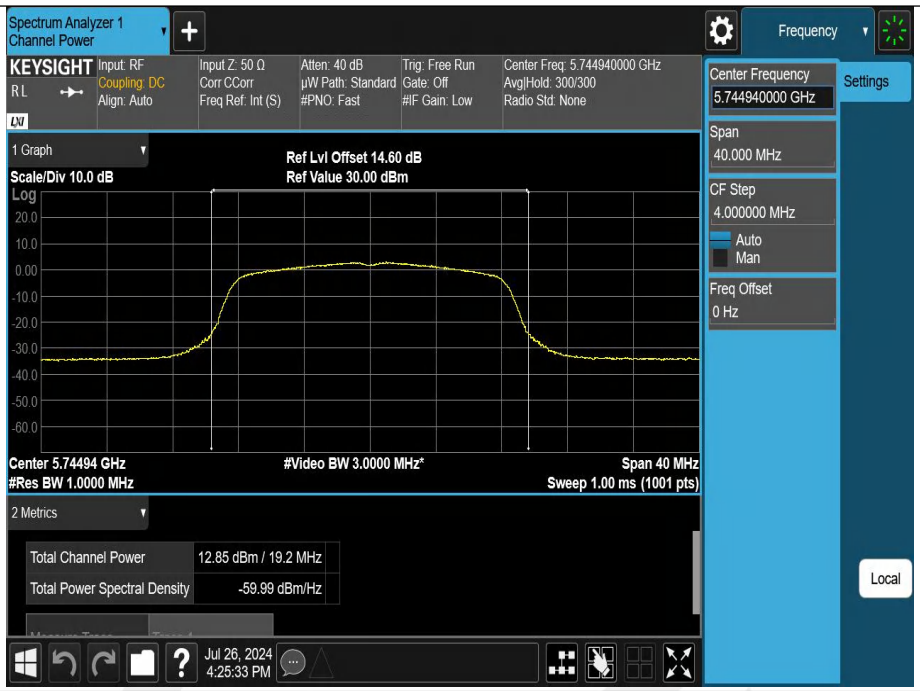


11A-Ant1-5745-PASS

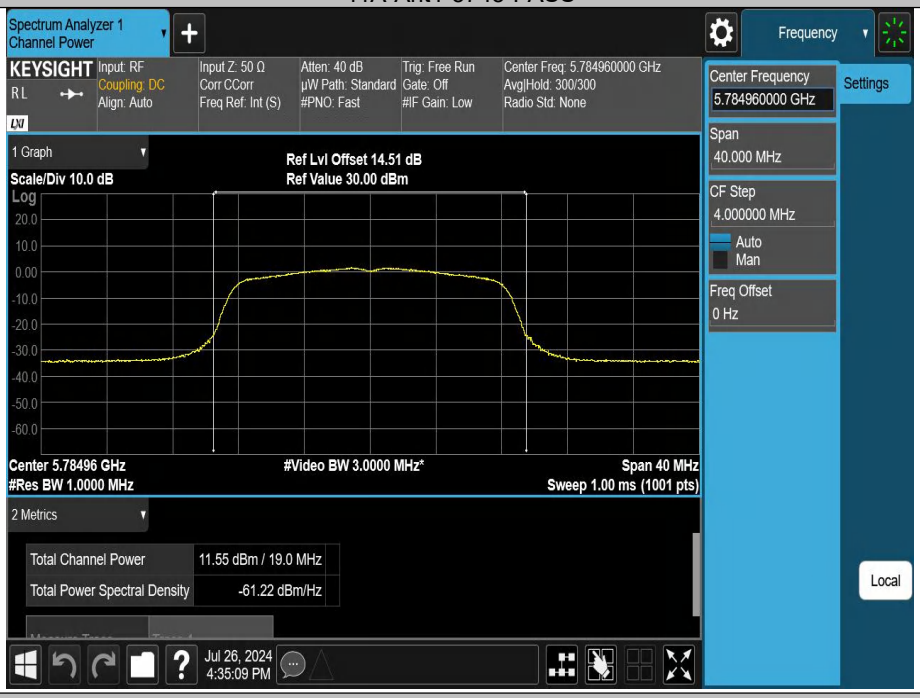


11A-Ant1-5785-PASS

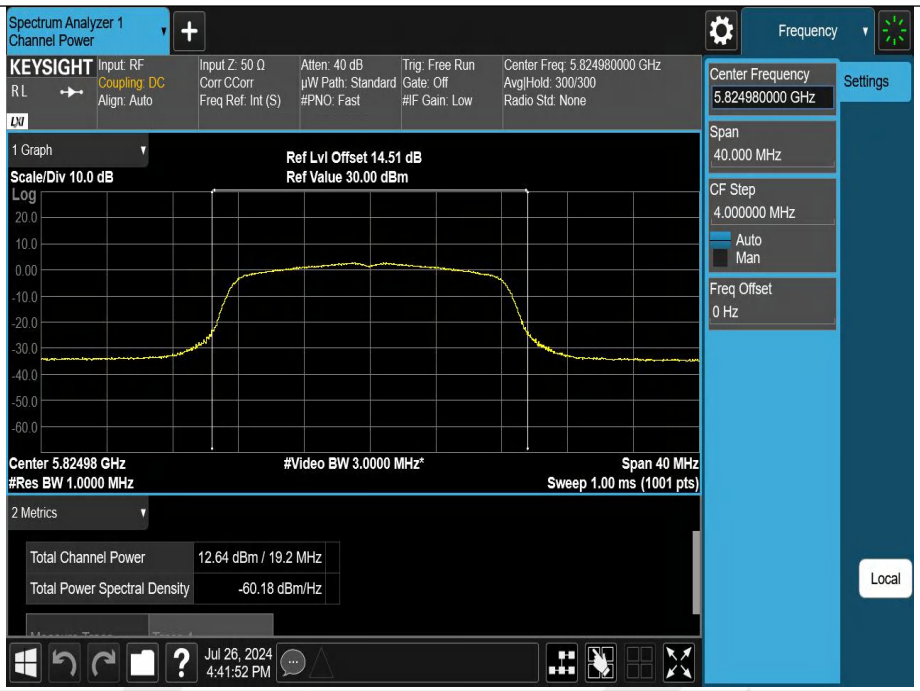


11A-Ant1-5825-PASS

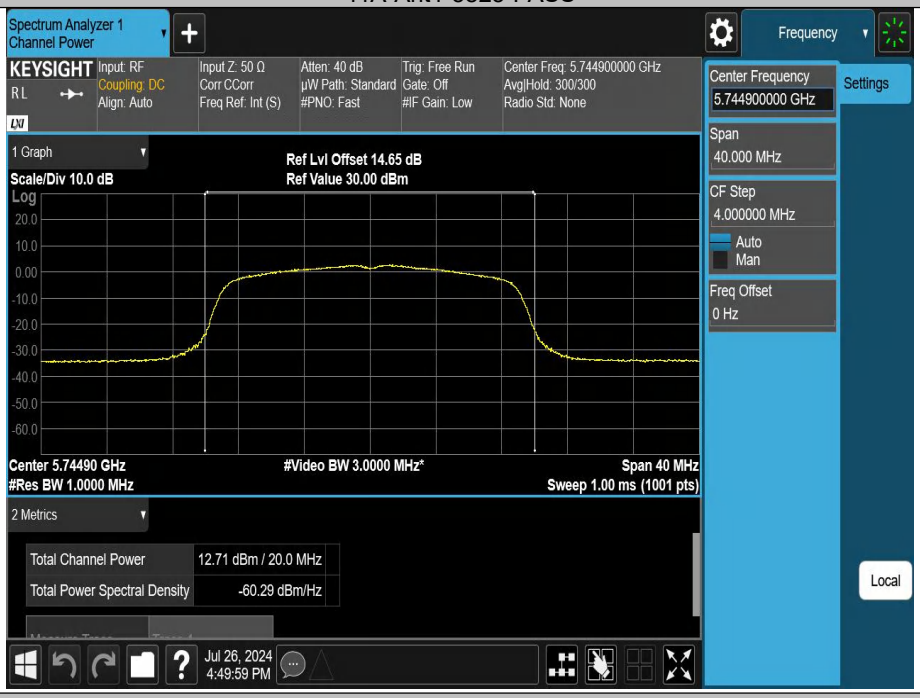


11N20SISO-Ant1-5745-PASS

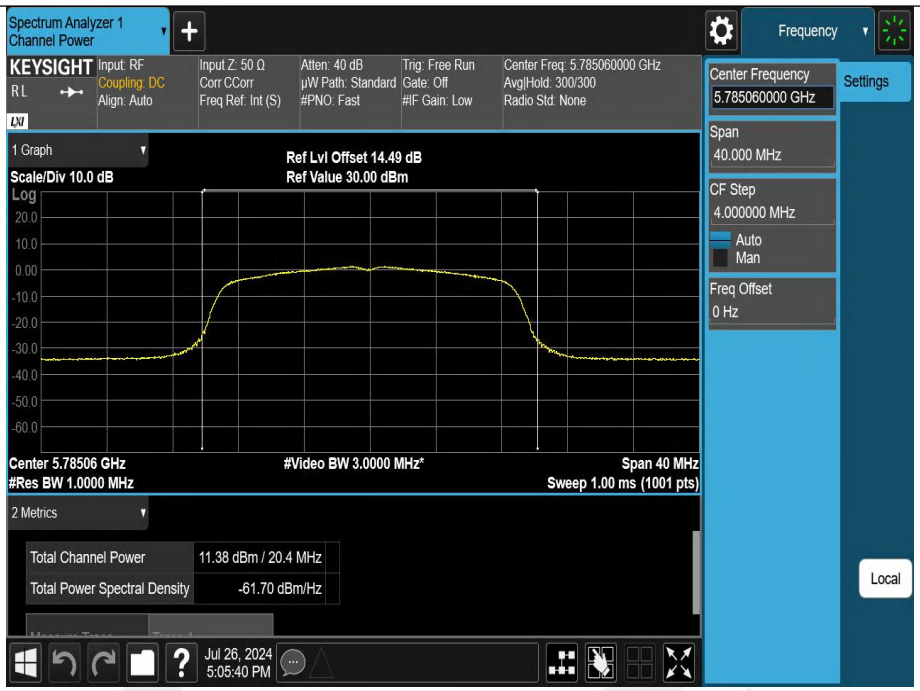


11N20SISO-Ant1-5785-PASS

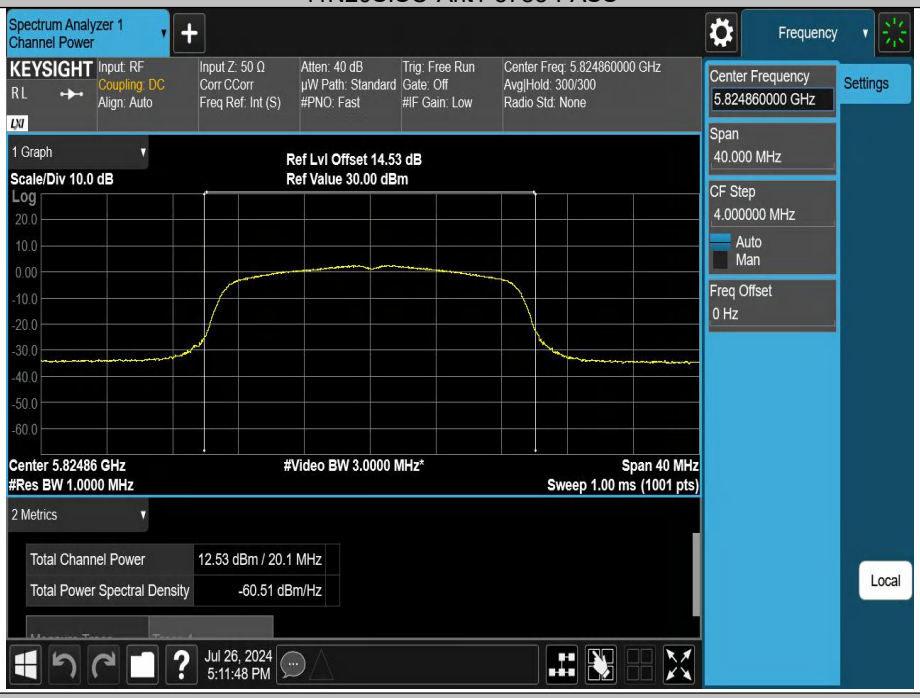


11N20SISO-Ant1-5825-PASS

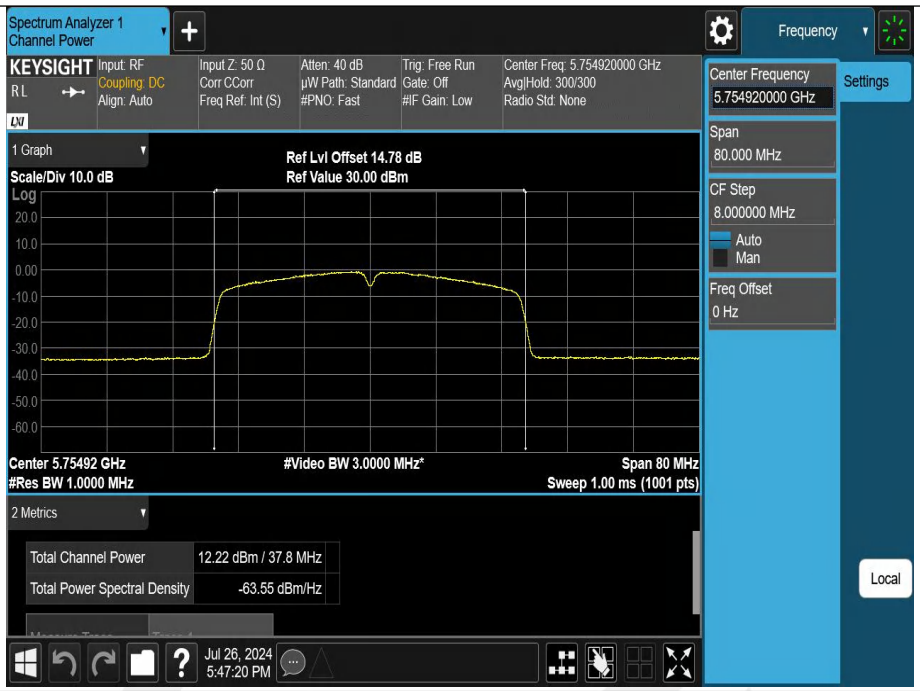


11N40SISO-Ant1-5755-PASS

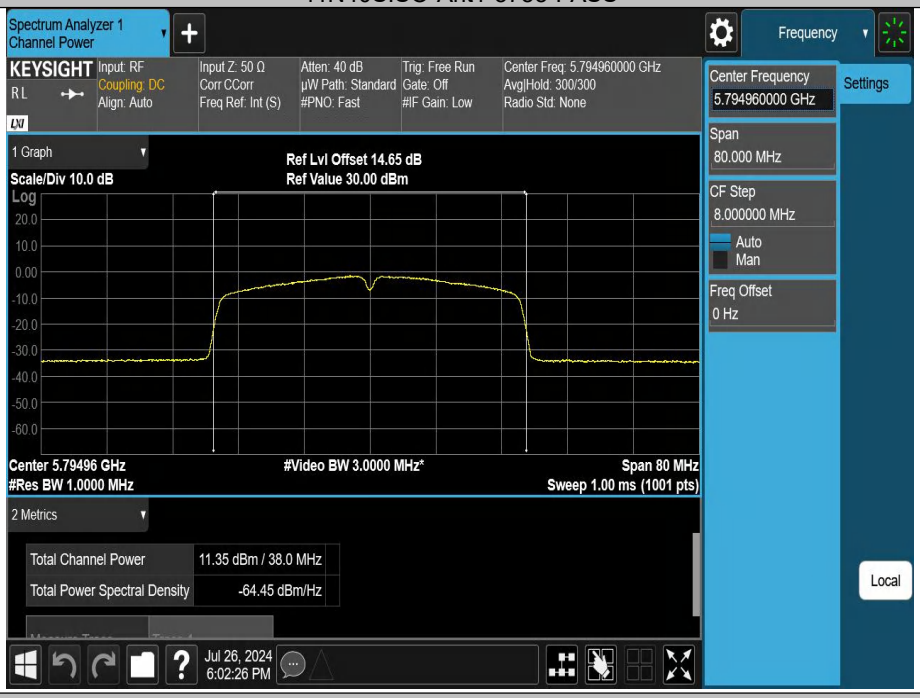


11N40SISO-Ant1-5795-PASS

## 8.3 MAXIMUM PEAK POWER DENSITY

8.3.1 Applicable Standard

According to FCC Part 15.407(a)(1) for UNII Band I
According to FCC Part 15.407(a)(3) for UNII Band III
According to 789033 D02 Section II(F)
According to RSS 247 6.2

8.3.2 Conformance Limit

**FCC Limit:**

- For the band 5.15-5.25 GHz,

(a) (1) (i) For an outdoor access point, the maximum power spectral density shall not exceed 17 dBm in any 1 megahertz band provided the maximum antenna gain does not exceed 6 dBi. If transmitting antennas of directional gain greater than 6 dBi are used, the maximum power spectral density shall be reduced by the amount in dB that the directional gain of the antenna exceeds 6 dBi.

(a) (1) (ii) For an indoor access point, the maximum power spectral density shall not exceed 17 dBm in any 1 megahertz band provided the maximum antenna gain does not exceed 6 dBi. If transmitting antennas of directional gain greater than 6 dBi are used, the maximum power spectral density shall be reduced by the amount in dB that the directional gain of the antenna exceeds 6 dBi.

(a) (1) (iii) For fixed point-to-point access points, the maximum power spectral density shall not exceed 17 dBm in any 1 megahertz band. Fixed point-to-point U-NII devices may employ antennas with directional gain up to 23 dBi without any corresponding reduction in the maximum power spectral density. For fixed point-to-point transmitters that employ a directional antenna gain greater than 23 dBi, a 1 dB reduction in maximum power spectral density is required for each 1 dB of antenna gain in excess of 23 dBi. Fixed, point-to-point operations exclude the use of point-to-multipoint systems, omnidirectional applications, and multiple collocated transmitters transmitting the same information. The operator of the U-NII device, or if the equipment is professionally installed, the installer, is responsible for ensuring that systems employing high gain directional antennas are used exclusively for fixed, point-to-point operations.

(a) (1) (iv) For client devices, the maximum power spectral density shall not exceed 11 dBm in any 1 megahertz band provided the maximum antenna gain does not exceed 6 dBi. If transmitting antennas of directional gain greater than 6 dBi are used, the maximum power spectral density shall be reduced by the amount in dB that the directional gain of the antenna exceeds 6 dBi.

- For the 5.25-5.35 GHz and 5.47-5.725 GHz bands

(b) (2) The maximum power spectral density shall not exceed 11 dBm in any 1 megahertz band provided the maximum antenna gain does not exceed 6 dBi. If transmitting antennas of directional gain greater than 6 dBi are used, the maximum power spectral density shall be reduced by the amount in dB that the directional gain of the antenna exceeds 6 dBi.

- For the band 5.725-5.85 GHz

(a) (3)The maximum power spectral density shall not exceed 30 dBm in any 500-kHz band provided the maximum antenna gain does not exceed 6 dBi. If transmitting antennas of directional gain greater than 6 dBi are used, the maximum power spectral density shall be reduced by the amount in dB that the directional gain of the antenna exceeds 6 dBi. However, fixed point-to-point U-NII devices operating in this band may employ transmitting antennas with directional gain greater than 6 dBi without any corresponding reduction in transmitter conducted power. Fixed, point-to-point operations exclude the use of point-to-multipoint systems, omnidirectional applications, and multiple collocated transmitters transmitting the same information. The operator of the U-NII device, or if the equipment is professionally installed, the installer, is responsible for ensuring that systems employing high gain directional antennas are used exclusively for fixed, point-to-point operations

**IC Limit:**

- Frequency band 5150-5250 MHz

The e.i.r.p. spectral density shall not exceed 10 dBm in any 1.0 MHz band.

- Frequency band 5250-5350 MHz

The power spectral density shall not exceed 11 dBm in any 1.0 MHz band.

- Frequency bands 5470-5600 MHz and 5650-5725 MHz

The power spectral density shall not exceed 11 dBm in any 1.0 MHz band.

- Frequency band 5725-5850 MHz

The output power spectral density shall not exceed 30 dBm in any 500 kHz band. If transmitting antennas of directional gain greater than 6 dBi are used, the output power spectral density shall be reduced by the amount in dB that the directional gain of the antenna exceeds 6 dBi. However, fixed point-to-point devices operating in this band may employ transmitting antennas with directional gain greater than 6 dBi without any corresponding reduction in transmitter conducted power. Fixed point-to-point operations exclude the use of point-to-multipoint systems, omnidirectional applications and multiple collocated transmitters transmitting the same information.

### 8.3.3 Test Configuration

Test according to clause 6.1 radio frequency test setup

### 8.3.4 Test Procedure

Methods refer to FCC KDB 789033

For devices operating in the bands 5.15-5.25 GHz, 5.25-5.35 GHz, and 5.47-5.725 GHz, the above procedures make use of 1 MHz RBW to satisfy directly the 1 MHz reference bandwidth specified in § 15.407(a)(5). For devices operating in the band 5.725-5.85 GHz, the rules specify a measurement bandwidth of 500 kHz. Many spectrum analyzers do not have 500 kHz RBW, thus a narrower RBW may need to be used. The rules permit the use of a RBWs less than 1 MHz, or 500 kHz, "provided that the measured power is integrated over the full reference bandwidth" to show the total power over the specified measurement bandwidth (i.e., 1 MHz, or 500 kHz). If measurements are performed using a reduced resolution bandwidth (< 1 MHz, or < 500 kHz) and integrated over 1 MHz, or 500 KHz bandwidth, the following adjustments to the procedures apply:

a) Set RBW ≥ 1/T, where T is defined in section II.B.I.a).

b) Set VBW ≥ 3 RBW.

c) If measurement bandwidth of Maximum PSD is specified in 500 kHz, add 10log(500kHz/RBW) to the measured result, whereas RBW (< 500 KHz) is the reduced resolution bandwidth of the spectrum analyzer set during measurement.

d) If measurement bandwidth of Maximum PSD is specified in 1 MHz, add 10log(1MHz/RBW) to the measured result, whereas RBW (< 1 MHz) is the reduced resolution bandwidth of spectrum analyzer set during measurement.

e) Care must be taken to ensure that the measurements are performed during a period of continuous transmission or are corrected upward for duty cycle.

Note: As a practical matter, it is recommended to use reduced RBW of 100 KHz for the sections

5.c) and 5.d) above, since RBW=100 KHZ is available on nearly all spectrum analyzers.

### 8.3.5 Test Results

| | |
|---|---|
| Temperature: | 25 ˚C |
| Relative Humidity: | 45% |
| ATM Pressure: | 1011 mbar |

Note: N/A

| TestMode | Antenna | Frequency[MHz] | Result [dBm/MHz] | Limit[dBm/MHz] | Verdict |
|---|---|---|---|---|---|
| 11A | Ant1 | 5745 | 0.83 | ≤30.00 | PASS |
| 11A | Ant1 | 5785 | -0.71 | ≤30.00 | PASS |
| 11A | Ant1 | 5825 | 0.34 | ≤30.00 | PASS |
| 11N20SISO | Ant1 | 5745 | 0.37 | ≤30.00 | PASS |
| 11N20SISO | Ant1 | 5785 | -1.12 | ≤30.00 | PASS |
| 11N20SISO | Ant1 | 5825 | 0.00 | ≤30.00 | PASS |
| 11N40SISO | Ant1 | 5755 | -2.52 | ≤30.00 | PASS |
| 11N40SISO | Ant1 | 5795 | -4.10 | ≤30.00 | PASS |

Note：1. The Result and Limit Unit is dBm/500 kHz in the band 5.725–5.85 GHz.
2. The Duty Cycle Factor and RBW Factor is compensated in the graph.

11A-Ant1-5745-PASS

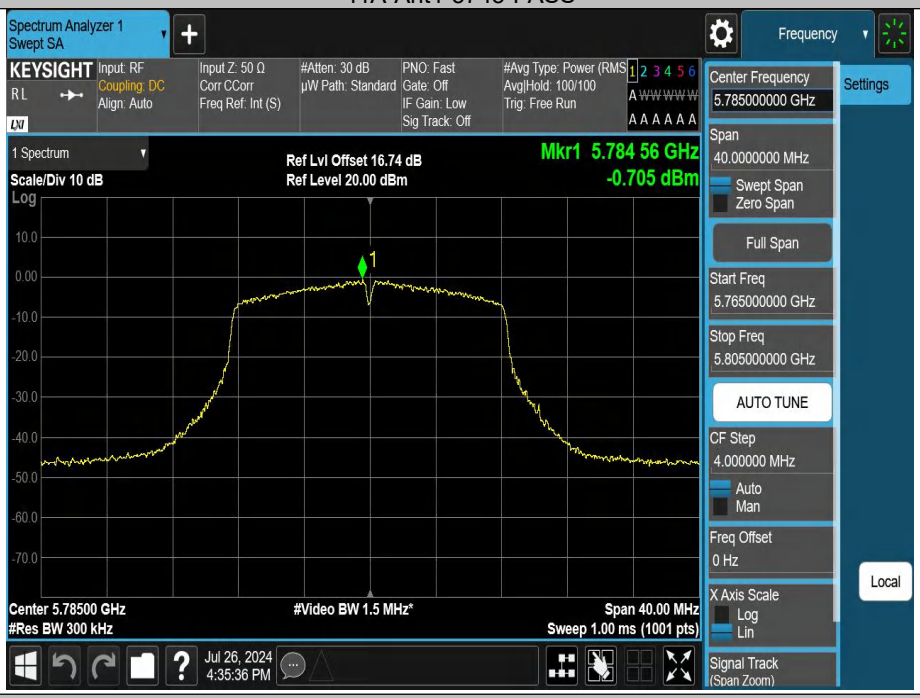


11A-Ant1-5785-PASS

11A-Ant1-5825-PASS

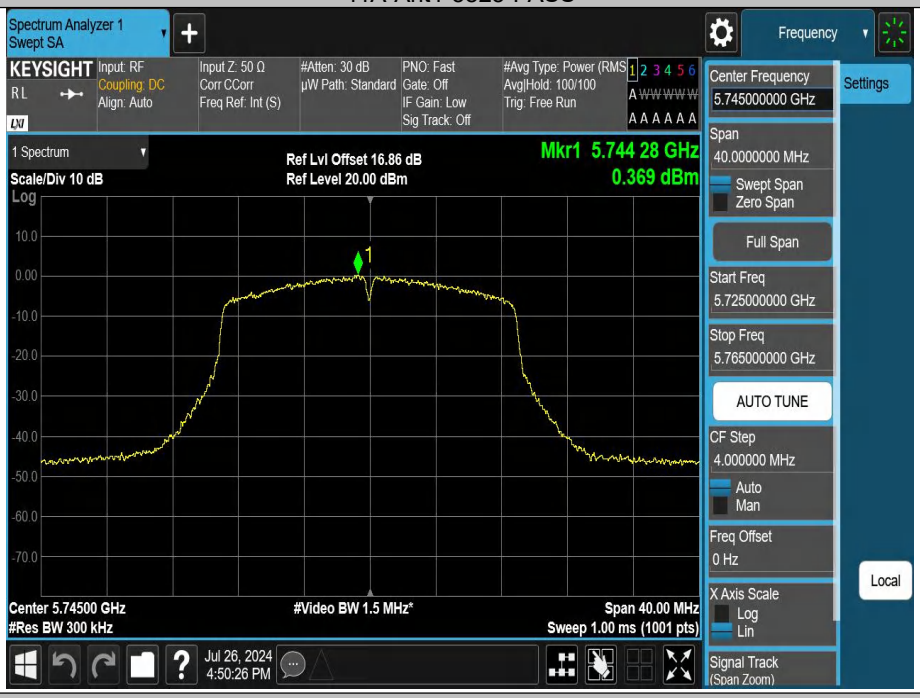


11N20SISO-Ant1-5745-PASS

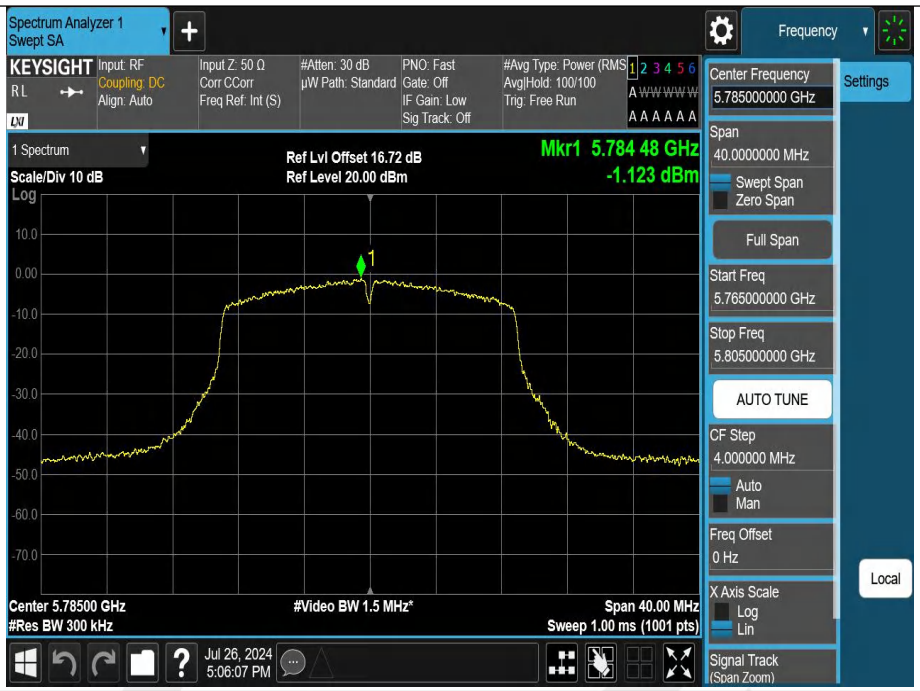


11N20SISO-Ant1-5785-PASS

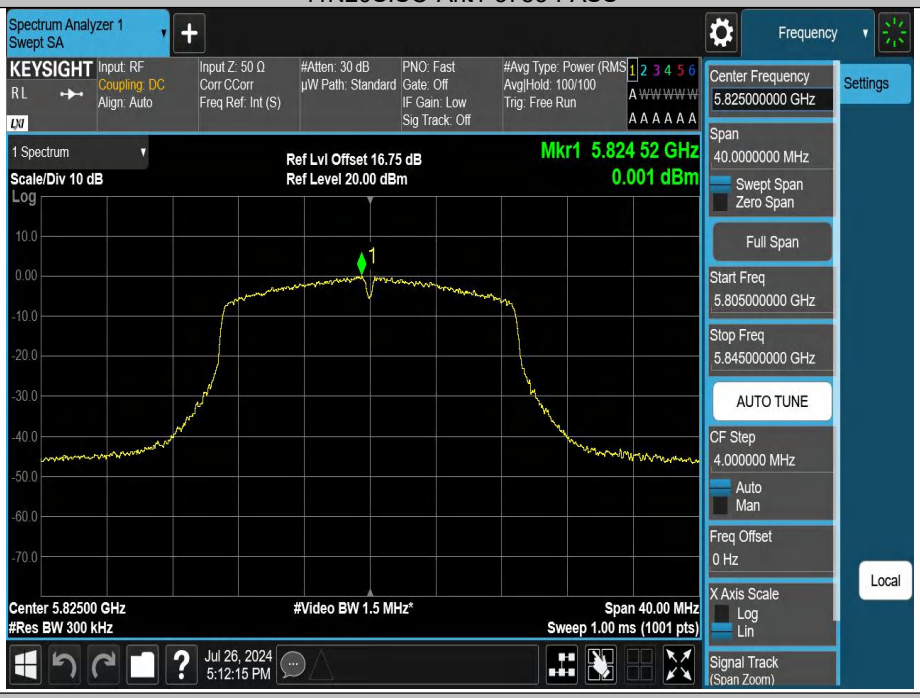


11N20SISO-Ant1-5825-PASS

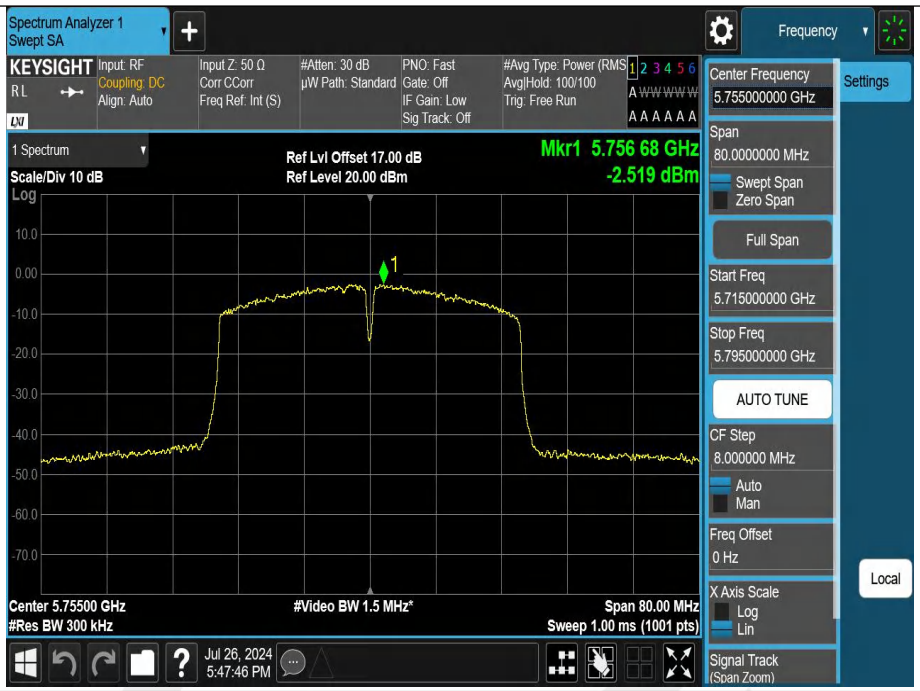


11N40SISO-Ant1-5755-PASS

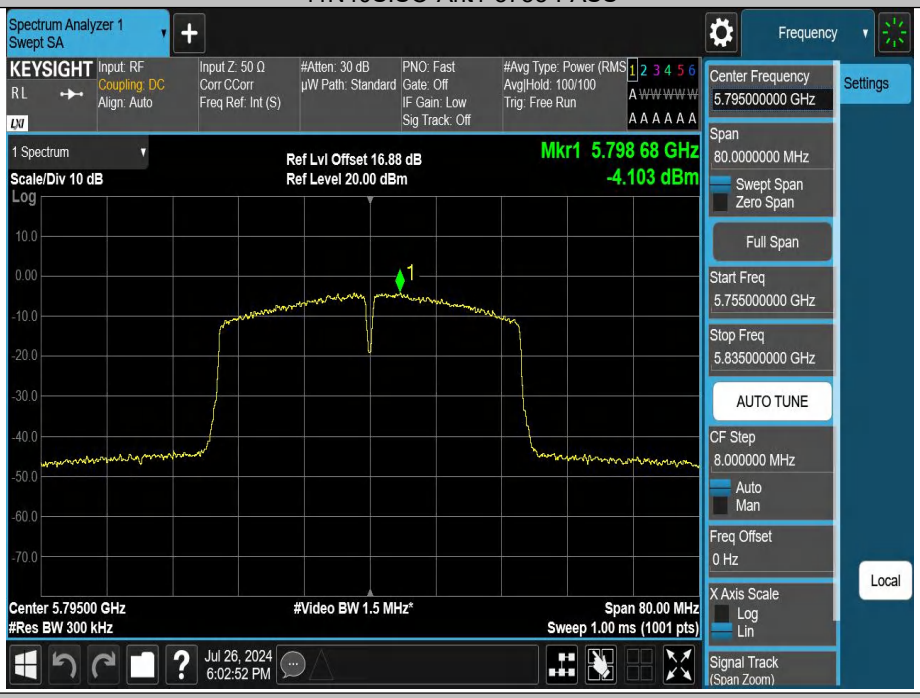


11N40SISO-Ant1-5795-PASS

## 8.4 UNDESIRABLE RADIATED SPURIOUS EMISSION

### 8.4.1 Applicable Standard

According to FCC Part 15.407 (b), 15.209, 15.205
According to 789033 D02 Section II(G)
According to RSS-GEN 8.9, 8.10 and 6.13

### 8.4.2 Conformance Limit

For transmitters operating in the 5.15-5.25 GHz band: All emissions outside of the 5.15-5.35 GHz band shall not exceed an e.i.r.p. of −27 dBm/MHz.
For transmitters operating in the 5.25-5.35 GHz band: All emissions outside of the 5.15-5.35 GHz band shall not exceed an e.i.r.p. of −27 dBm/MHz.
For transmitters operating in the 5.47-5.725 GHz band: All emissions outside of the 5.47-5.725 GHz band shall not exceed an e.i.r.p. of −27 dBm/MHz.
For transmitters operating in the 5.725-5.85 GHz band: All emissions shall be limited to a level of −27 dBm/MHz at 75 MHz or more above or below the band edge increasing linearly to 10 dBm/MHz at 25 MHz above or below the band edge, and from 25 MHz above or below the band edge increasing linearly to a level of 15.6 dBm/MHz at 5 MHz above or below the band edge, and from 5 MHz above or below the band edge increasing linearly to a level of 27 dBm/MHz at the band edge.
The emission measurements shall be performed using a minimum resolution bandwidth of 1 MHz. A lower resolution bandwidth may be employed near the band edge, when necessary, provided the measured energy is integrated to show the total power over 1 MHz.
Unwanted emissions below 1 GHz must comply with the general field strength limits set forth in §15.209
The emissions from an intentional radiator shall not exceed the field strength levels specified in the following table 15.209(a):

| Restricted Frequency(MHz) | Field Strength (μV/m) | Field Strength (dBμV/m) | Measurement Distance |
|---|---|---|---|
| 0.009-0.490 | 2400/F(KHz) | 20 log (uV/m) | 300 |
| 0.490-1.705 | 24000/F(KHz) | 20 log (uV/m) | 30 |
| 1.705-30 | 30 | 29.5 | 30 |
| 30-88 | 100 | 40 | 3 |
| 88-216 | 150 | 43.5 | 3 |
| 216-960 | 200 | 46 | 3 |
| Above 960 | 500 | 54 | 3 |

The provisions of §15.205 apply to intentional radiators operating under this section,15.205 Restricted bands of operation

| MHz | MHz | MHz | GHz |
|---|---|---|---|
| 0.090-0.110 | 16.42-16.423 | 399.9-410 | 4.5-5.15 |
| 10.495-0.505 | 16.69475-16.69525 | 608-614 | 5.35-5.46 |
| 2.1735-2.1905 | 16.80425-16.80475 | 960-1240 | 7.25-7.75 |
| 4.125-4.128 | 25.5-25.67 | 1300-1427 | 8.025-8.5 |
| 4.17725-4.17775 | 37.5-38.25 | 1435-1626.5 | 9.0-9.2 |
| 4.20725-4.20775 | 73-74.6 | 1645.5-1646.5 | 9.3-9.5 |
| 6.215-6.218 | 74.8-75.2 | 1660-1710 | 10.6-12.7 |
| 6.26775-6.26825 | 123-138 | 2200-2300 | 14.47-14.5 |
| 8.291-8.294 | 149.9-150.05 | 2310-2390 | 15.35-16.2 |
| 8.362-8.366 | 156.52475-156.52525 | 2483.5-2500 | 17.7-21.4 |
| 8.37625-8.38675 | 156.7-156.9 | 2690-2900 | 22.01-23.12 |
| 8.41425-8.41475 | 162.0125-167.17 | 3260-3267 | 23.6-24.0 |
| 12.29-12.293 | 167.72-173.2 | 3332-3339 | 31.2-31.8 |
| 12.51975-12.52025 | 240-285 | 3345.8-3358 | 36.43-36.5 |
| 12.57675-12.57725 | 322-335.4 | 3600-4400 | (2) |
| 13.36-13.41 | | | |

Remark: 1. Emission level in dBuV/m=20 log (uV/m)
2. Measurement was performed at an antenna to the closed point of EUT distance of meters.
3. Only spurious frequency is permitted to locate within the Restricted Bands specified in provision of 15.205, and the emissions located in restricted bands also comply with 15.209 limit.

### 8.4.3 Test Configuration

Test according to clause 6.2 radio frequency test setup

### 8.4.4 Test Procedure

■ Unwanted Emissions Measurements below 1000 MHz

Compliance shall be demonstrated using CISPR quasi-peak detection; however, peak detection is permitted as an alternative to quasi-peak detection.
The EUT was placed on a turn table which is 0.8m above ground plane.
And also, each emission was to be maximized by changing the polarization of receiving antenna both horizontal and vertical.
Repeat above procedures until all frequency measured was complete.
We use software control the EUT, Let EUT hopping on and transmit with highest power, All the modes have been tested and the worst result was reported.
Use the following spectrum analyzer settings:
Set RBW=120kHz for f < 1 GHz(30MHz to 1GHz), 200Hz for f<150KHz(9KHz to 150KHz), 9KHz for <30MHz(150KHz to 30KHz).
Set the VBW > RBW.
Detector = Peak.
Trace mode = max hold.
Follow the guidelines in ANSI C63.10-2013 with respect to maximizing the emission by rotating the EUT, measuring the emission while the EUT is situated in three orthogonal planes (if appropriate), adjusting the measurement antenna height and polarization, etc. A pre-amp and a high pass filter are required for this test, in order to provide the measuring system with sufficient sensitivity. Allow the trace to stabilize. The peak reading of the emission, after being corrected by the antenna factor, cable loss, pre-amp gain, etc., is the peak field strength, which must comply with the limit specified in Section 15.35(b). Submit this data.
Repeat above procedures until all frequency measured was complete.

■ Unwanted Maximum peak Emissions Measurements above 1000 MHz

Maximum emission levels are measured by setting the analyzer as follows:
RBW = 1 MHz.
VBW ≥ 3 MHz.
Detector = Peak.
Sweep time = auto.
Trace mode = max hold.
Allow sweeps to continue until the trace stabilizes. Note that if the transmission is not continuous, the time required for the trace to stabilize will increase by a factor of approximately 1/x, where x is the duty cycle. For example, at 50 percent duty cycle, the measurement time will increase by a factor of two relative to measurement time for continuous transmission.

■ Unwanted Average Emissions Measurements above 1000 MHz

Method VB (Averaging using reduced video bandwidth): Alternative method.
RBW = 1 MHz.
Video bandwidth. • If the EUT is configured to transmit with duty cycle ≥ 98 percent, set VBW ≤ RBW/100 (i.e., 10 kHz) but not less than 10 Hz.
• If the EUT duty cycle is < 98 percent, set VBW ≥ 1/T, where T is defined in section II.B.1.a).
Video bandwidth mode or display mode • The instrument shall be set to ensure that video filtering is applied in the power domain. Typically, this requires setting the detector mode to RMS and setting the Average-VBW Type to Power (RMS).
• As an alternative, the analyzer may be set to linear detector mode. Ensure that video filtering is applied in linear voltage domain (rather than in a log or dB domain). Some analyzers require linear display mode in order to accomplish this. Others have a setting for Average-VBW Type, which can be set to “Voltage” regardless of the display mode.
Detector = Peak.

Sweep time = auto.
Trace mode = max hold.
Allow max hold to run for at least 50 traces if the transmitted signal is continuous or has at least 98 percent duty cycle. For lower duty cycles, increase the minimum number of traces by a factor of 1/x, where x is the duty cycle. For example, use at least 200 traces if the duty cycle is 25 percent. (If a specific emission is demonstrated to be continuous—i.e., 100 percent duty cycle—rather than turning on and off with the transmit cycle, at least 50 traces shall be averaged.)

■ Band edge measurements.
Unwanted band-edge emissions may be measured using either of the special band-edge measurement techniques (the marker-delta or integration methods) described below. Note that the marker-delta method is primarily a radiated measurement technique that requires the 99% occupied bandwidth edge to be within 2 MHz of the authorized band edge, whereas the integration method can be used in either a radiated or conducted measurement without any special requirement with regards to the displacement of the unwanted emission(s) relative to the authorized bandwidth.
Marker-Delta Method.
The marker-delta method, as described in ANSI C63.10, can be used to perform measurements of the radiated unwanted emissions level of emissions provided that the 99% occupied bandwidth of the fundamental is within 2 MHz of the authorized band-edge.

8.4.5 Test Results

| | |
|---|---|
| Temperature: | 22° C |
| Relative Humidity: | 43% |
| ATM Pressure: | 1011 mbar |

■ Spurious Emission below 30MHz(9KHz to 30MHz)

| Freq. (MHz) | Ant.Pol. | Emission Level(dBuV/m) | | Limit 3m(dBuV/m) | | Over(dB) | |
|---|---|---|---|---|---|---|---|
| | H/V | PK | AV | PK | AV | PK | AV |
| -- | -- | -- | -- | -- | -- | -- | -- |

Note: the amplitude of spurious emission that is attenuated by more than 20dB below the permissible limit has no need to be reported.
Distance extrapolation factor =40log(Specific distance/ test distance)( dB);
Limit line=Specific limits(dBuV) + distance extrapolation factor

■ For Undesirable radiated Spurious Emission in U-NII -3

● Undesirable radiated Spurious Emission Above 1GHz (1GHz to 40GHz)

All the antenna(Antenna 1) and modes(802.11a/n) has been tested and the worst(Antenna 1, 802.11a) result recorded was report as below:

| Test mode: | 802.11a | Frequency: | Channel 149: 5745MHz | | |
|---|---|---|---|---|---|
| Freq. (MHz) | Ant.Pol. | Field Strength (dBuV/m) | E.I.R.P (dBm) | Limit (dBm) | Over(dB) |
| 11306.88 | V | 56.24 | -38.99 | -27 | -11.99 |
| 14896.74 | V | 55.34 | -39.89 | -27 | -12.89 |
| 17933.65 | V | 52.32 | -42.91 | -27 | -15.91 |
| 11871.37 | H | 53.74 | -41.49 | -27 | -14.49 |
| 14684.61 | H | 54.86 | -40.37 | -27 | -13.37 |
| 17675.12 | H | 52.95 | -42.28 | -27 | -15.28 |

| Test mode: | 802.11a | Frequency: | Channel 157: 5785MHz | | |
|---|---|---|---|---|---|
| Freq. (MHz) | Ant.Pol. | Field Strength (dBuV/m) | E.I.R.P (dBm) | Limit (dBm) | Over(dB) |
| 11283.7 | V | 55.78 | -39.45 | -27 | -12.45 |
| 14926.65 | V | 55.26 | -39.97 | -27 | -12.97 |
| 17925.69 | V | 53.71 | -41.52 | -27 | -14.52 |
| 11893.88 | H | 55.08 | -40.15 | -27 | -13.15 |
| 14670.21 | H | 53.88 | -41.35 | -27 | -14.35 |
| 17698.85 | H | 52.43 | -42.80 | -27 | -15.80 |

| Test mode: | 802.11a | Frequency: | Channel 165: 5825MHz | | |
|---|---|---|---|---|---|
| Freq. (MHz) | Ant.Pol. | Field Strength (dBuV/m) | E.I.R.P (dBm) | Limit (dBm) | Over(dB) |
| 11327.35 | V | 54.90 | -40.33 | -27 | -13.33 |
| 14978.9 | V | 54.61 | -40.62 | -27 | -13.62 |
| 17852.2 | V | 53.17 | -42.06 | -27 | -15.06 |
| 11890.71 | H | 53.85 | -41.38 | -27 | -14.38 |
| 14671.08 | H | 53.72 | -41.51 | -27 | -14.51 |
| 17700.16 | H | 52.95 | -42.28 | -27 | -15.28 |

**Note:** (1) All Readings are Peak Value (VBW=3MHz) and Average Value (VBW=10Hz).
(2) Emission Level= Reading Level+Probe Factor +Cable Loss.
(3)EIRP[dBm] = E[dBμV/m] + 20 log(d[meters]) - 104.77
d is the measurement distance in 3 meters

| Test mode: 802.11a | | | | Frequency: | | Channel 149: 5745MHz | |
|---|---|---|---|---|---|---|---|
| Freq. (MHz) | Ant.Pol. | Emission Level(dBuV/m) | | Limit 3m(dBuV/m) | | Over(dB) | |
| | H/V | PK | AV | PK | AV | PK | AV |
| 7800 | V | 55.87 | 42 | 74 | 54 | -18.13 | -12.00 |
| 9568 | V | 55.58 | 41.65 | 74 | 54 | -18.42 | -12.35 |
| 12050 | V | 55.6 | 41.66 | 74 | 54 | -18.40 | -12.34 |
| 8242 | H | 56.6 | 42.69 | 74 | 54 | -17.40 | -11.31 |
| 10316 | H | 56.27 | 42.26 | 74 | 54 | -17.73 | -11.74 |
| 14498 | H | 56.4 | 42.45 | 74 | 54 | -17.60 | -11.55 |

| Test mode: 802.11a | | | | Frequency: | | Channel 157: 5785MHz | |
|---|---|---|---|---|---|---|---|
| Freq. (MHz) | Ant.Pol. | Emission Level(dBuV/m) | | Limit 3m(dBuV/m) | | Over(dB) | |
| | H/V | PK | AV | PK | AV | PK | AV |
| 8038 | V | 56.55 | 42.68 | 74 | 54 | -17.45 | -11.32 |
| 11268 | V | 55.83 | 41.92 | 74 | 54 | -18.17 | -12.08 |
| 13716 | V | 55.55 | 41.47 | 74 | 54 | -18.45 | -12.53 |
| 6984 | H | 55.54 | 41.6 | 74 | 54 | -18.46 | -12.40 |
| 8718 | H | 55.28 | 41.4 | 74 | 54 | -18.72 | -12.60 |
| 13580 | H | 55.68 | 41.75 | 74 | 54 | -18.32 | -12.25 |

| Test mode:: 802.11a | | | | Frequency: | | Channel 165: 5825MHz | |
|---|---|---|---|---|---|---|---|
| Freq. (MHz) | Ant.Pol. | Emission Level(dBuV/m) | | Limit 3m(dBuV/m) | | Over(dB) | |
| | H/V | PK | AV | PK | AV | PK | AV |
| 8650 | V | 56.32 | 42.47 | 74 | 54 | -17.68 | -11.53 |
| 11370 | V | 55.78 | 41.9 | 74 | 54 | -18.22 | -12.10 |
| 13376 | V | 55.27 | 41.4 | 74 | 54 | -18.73 | -12.60 |
| 7732 | H | 55.79 | 41.91 | 74 | 54 | -18.21 | -12.09 |
| 10928 | H | 55.29 | 41.42 | 74 | 54 | 13.87 | -12.58 |
| 13138 | H | 54.87 | 41.04 | 74 | 54 | -19.13 | -12.96 |

**Note:**
(1) All Readings are Peak Value (VBW=3MHz) and Average Value (VBW=10Hz).
(2) Emission Level= Reading Level+Correct Factor.
(3) Correct Factor= Ant_F + Cab_L - Preamp
(4) The reading of emissions are attenuated more than 20dB below the permissible limits or the field strength is too small to be measured.

● Undesirable radiated Undesirable radiated Spurious Emission in Band Edge
All the antenna(Antenna 1) and modes(802.11a/n) has been tested and the worst(Antenna 1, 802.11a) result recorded was report as below:

| Test mode: | 802.11a | Frequency: | Channel 149: 5745MHz | | |
|---|---|---|---|---|---|
| Freq. (MHz) | Ant.Pol. | Field Strength (RBW=100KHz) (dBuV/m) | E.I.R.P (dBm) | Limit (dBm) | Verdict |
| 5635.5 | V | 50.37 | -44.86 | 68.23 | Pass |
| 5647 | H | 50.07 | -45.16 | 68.23 | Pass |

| Test mode: | 802.11a | Frequency: | Channel 165: 5825MHz | | |
|---|---|---|---|---|---|
| Freq. (MHz) | Ant.Pol. | Field Strength (RBW=100KHz) (dBuV/m) | E.I.R.P (dBm) | Limit (dBm) | Verdict |
| 5939 | V | 50.62 | -44.61 | 68.23 | Pass |
| 5929.75 | H | 50.48 | -44.75 | 68.23 | Pass |

**Note:** (1) All Readings are Peak Value (VBW=3MHz) and Average Value (VBW=10Hz).
(2) Emission Level= Reading Level+Probe Factor +Cable Loss.
(3)EIRP[dBm] = E[dBμV/m] + 20 log(d[meters]) - 104.77
d is the measurement distance in 3 meters

| U-NII -3 | | | |
|---|---|---|---|
| Test Model | Undesirable radiated Undesirable radiated Spurious Emission in Band Edge | | |
| 802.11a | Channel 149: 5745MHz | Ant.Pol | H |

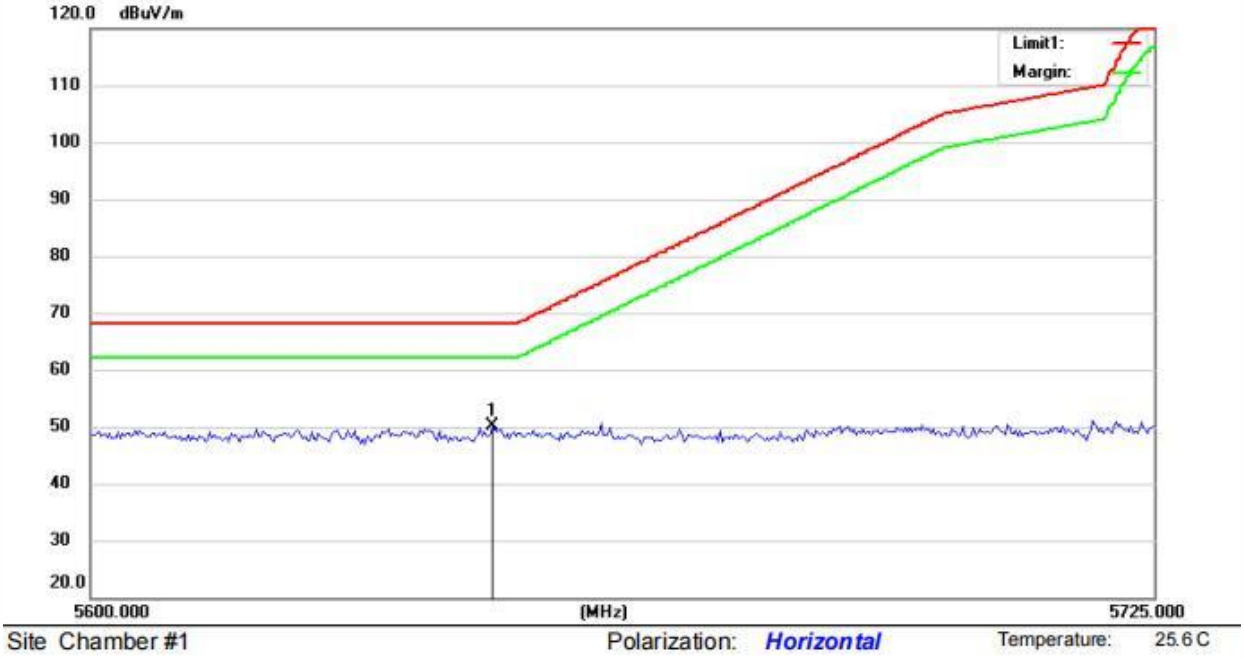


| U-NII -3 | | | |
|---|---|---|---|
| Test Model | Undesirable radiated Undesirable radiated Spurious Emission in Band Edge | | |
| 802.11a | Channel 149: 5745MHz | Ant.Pol | V |

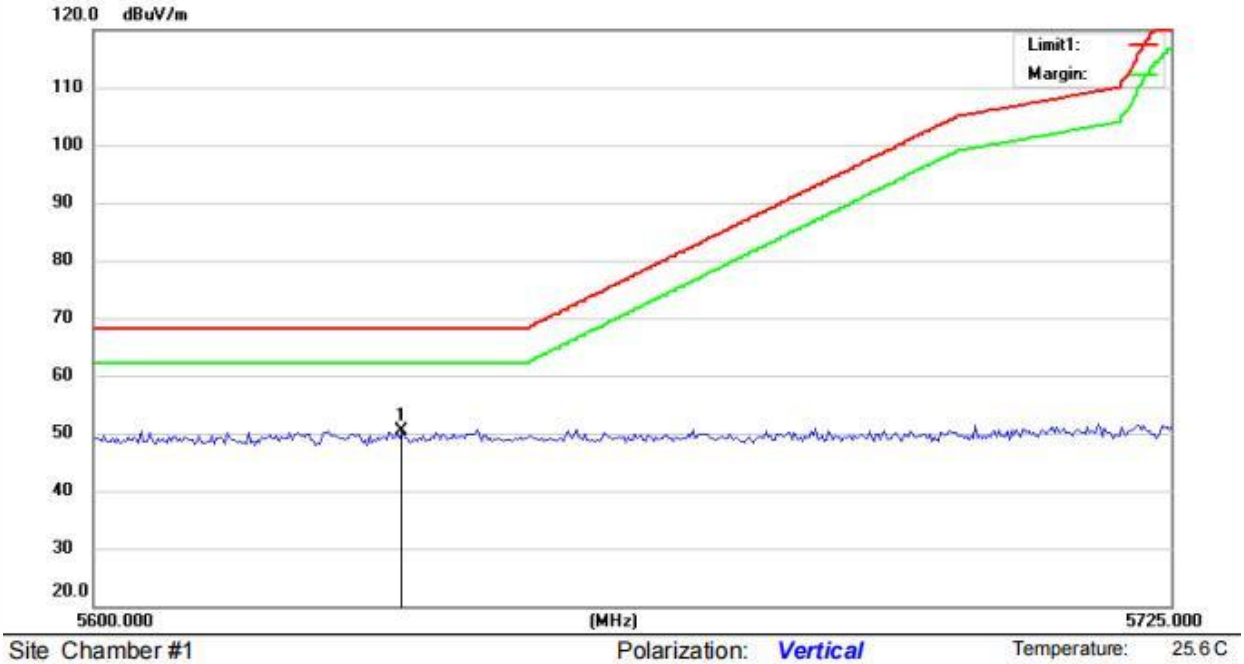

| U-NII -3 | | | |
|---|---|---|---|
| Test Model | Undesirable radiated Undesirable radiated Spurious Emission in Band Edge | | |
| 802.11a | Channel 165: 5825MHz | Ant.Pol | H |

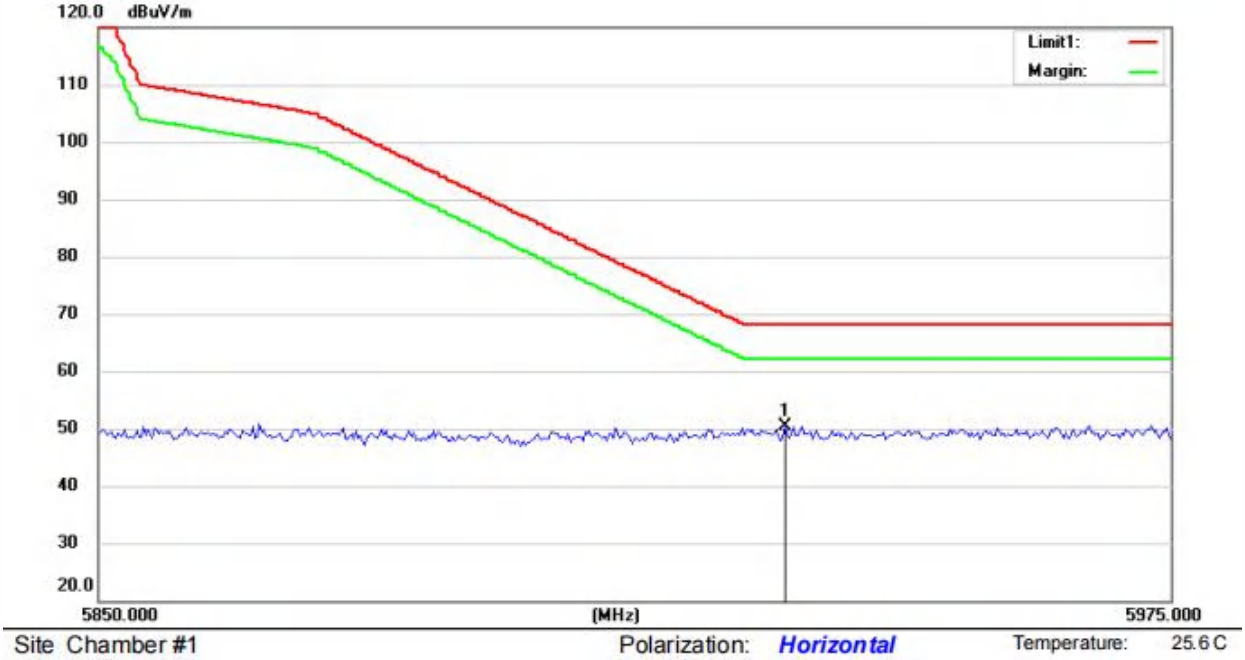


| U-NII -3 | | | |
|---|---|---|---|
| Test Model | Undesirable radiated Undesirable radiated Spurious Emission in Band Edge | | |
| 802.11a | Channel 165: 5825MHz | Ant.Pol | V |

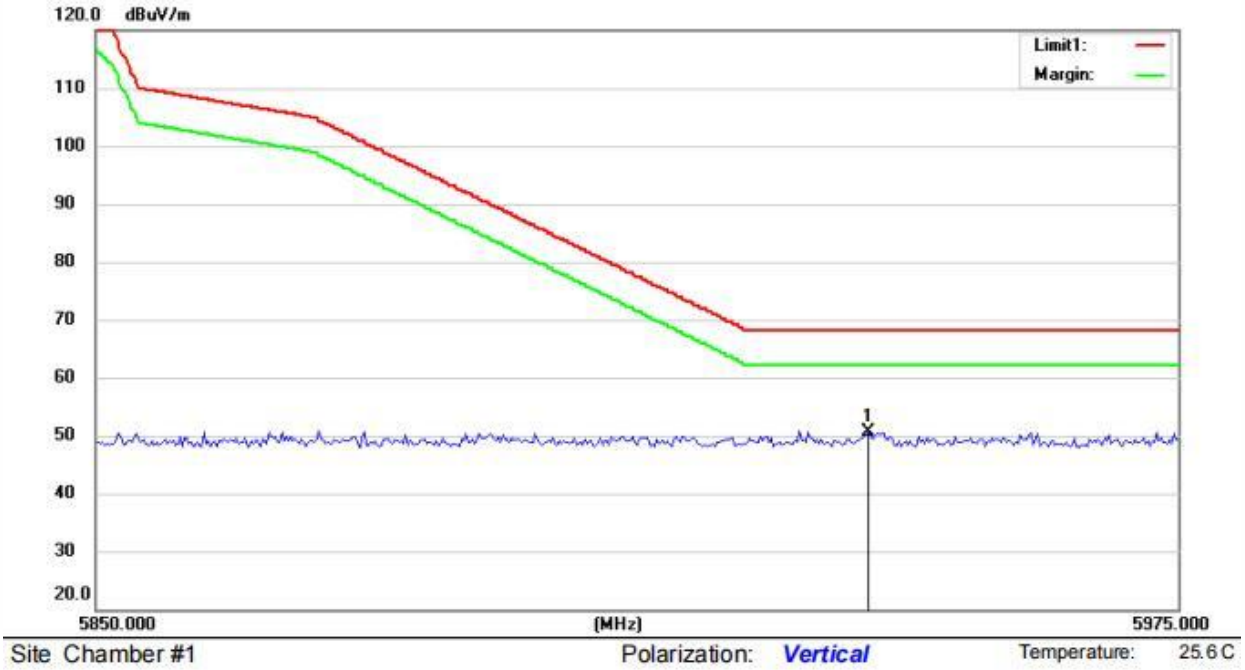

■ Undesirable radiated Spurious Emission below 1GHz (30MHz to 1GHz)
All the antenna( Antenna 1 ) and modes( 802.11a/n ) has been tested and the worst( Antenna 1 , 802.11a) result recorded was report as below:

Site Chamber #1 Polarization: *Horizontal* Temperature: 23.6 C

| No. | Mk. | Freq. | Reading Level | Ant. Factor | Pre Amp Gain | Cable loss | Measure-ment | Limit | Over | | HI | Degree | |
|---|---|---|---|---|---|---|---|---|---|---|---|---|---|
| | | MHz | dBuV | dB/m | dB | dB | dBuV/m | dBuV/m | dB | Detector | cm | deg. | Comment |
| 1 | | 32.2925 | 44.82 | 11.34 | 30.56 | 0.59 | 26.19 | 40.00 | -13.81 | QP | | | |
| 2 | | 55.0274 | 42.70 | 13.49 | 30.5 | 0.92 | 26.61 | 40.00 | -13.39 | QP | | | |
| 3 | * | 64.6594 | 52.54 | 11 | 30.53 | 1.08 | 34.09 | 40.00 | -5.91 | QP | | | |
| 4 | | 98.4866 | 49.59 | 11.36 | 30.87 | 1.08 | 31.16 | 43.50 | -12.34 | QP | | | |
| 5 | | 150.5378 | 49.93 | 8.52 | 30.62 | 1.44 | 29.27 | 43.50 | -14.23 | QP | | | |
| 6 | | 319.9370 | 46.68 | 14.34 | 29.83 | 2.24 | 33.43 | 46.00 | -12.57 | QP | | | |

*:Maximum data x:Over limit !:over margin Operator: Ccyf

Site Chamber #1 Polarization: *Vertical* Temperature: 23.6 C

| No. | Mk. | Freq. | Reading Level | Ant. Factor | Pre Amp Gain | Cable loss | Measure-ment | Limit | Over | | HI | Degree | |
|---|---|---|---|---|---|---|---|---|---|---|---|---|---|
| | | MHz | dBuV | dB/m | dB | dB | dBuV/m | dBuV/m | dB | Detector | cm | deg. | Comment |
| 1 | ! | 41.8596 | 51.34 | 13.23 | 30.52 | 0.65 | 34.70 | 40.00 | -5.30 | QP | | | |
| 2 | * | 63.7588 | 55.21 | 11.25 | 30.53 | 1.07 | 37.00 | 40.00 | -3.00 | QP | | | |
| 3 | ! | 99.8777 | 57.78 | 11.58 | 30.89 | 1.08 | 39.55 | 43.50 | -3.95 | QP | | | |
| 4 | | 111.7380 | 52.87 | 11.19 | 30.83 | 1.16 | 34.39 | 43.50 | -9.11 | QP | | | |
| 5 | | 147.9214 | 51.79 | 8.46 | 30.64 | 1.43 | 31.04 | 43.50 | -12.46 | QP | | | |
| 6 | | 432.5457 | 40.39 | 16.69 | 29.82 | 3.04 | 30.30 | 46.00 | -15.70 | QP | | | |

*:Maximum data x:Over limit !:over margin Operator: Ccyf

## 8.5 POWER LINE CONDUCTED EMISSIONS

8.5.1 Applicable Standard

According to FCC Part 15.207(a)
According to IC RSS-Gen 8.8

8.5.2 Conformance Limit

Conducted Emission Limit

| Frequency(MHz) | Quasi-peak | Average |
|---|---|---|
| 0.15-0.5 | 66-56 | 56-46 |
| 0.5-5.0 | 56 | 46 |
| 5.0-30.0 | 60 | 50 |

Note: 1. The lower limit shall apply at the transition frequencies
2. The limit decreases in line with the logarithm of the frequency in the range of 0.15 to 0.50MHz.

8.5.3 Test Configuration

Test according to clause 6.3 conducted emission test setup

8.5.4 Test Procedure

The EUT was placed on a table which is 0.8m above ground plane.
Maximum procedure was performed on the highest emissions to ensure EUT compliance.
Repeat above procedures until all frequency measured were complete.

8.5.5 Test Results

Pass

The AC120V &240V voltage have been tested, and the worst result recorded was report as below:

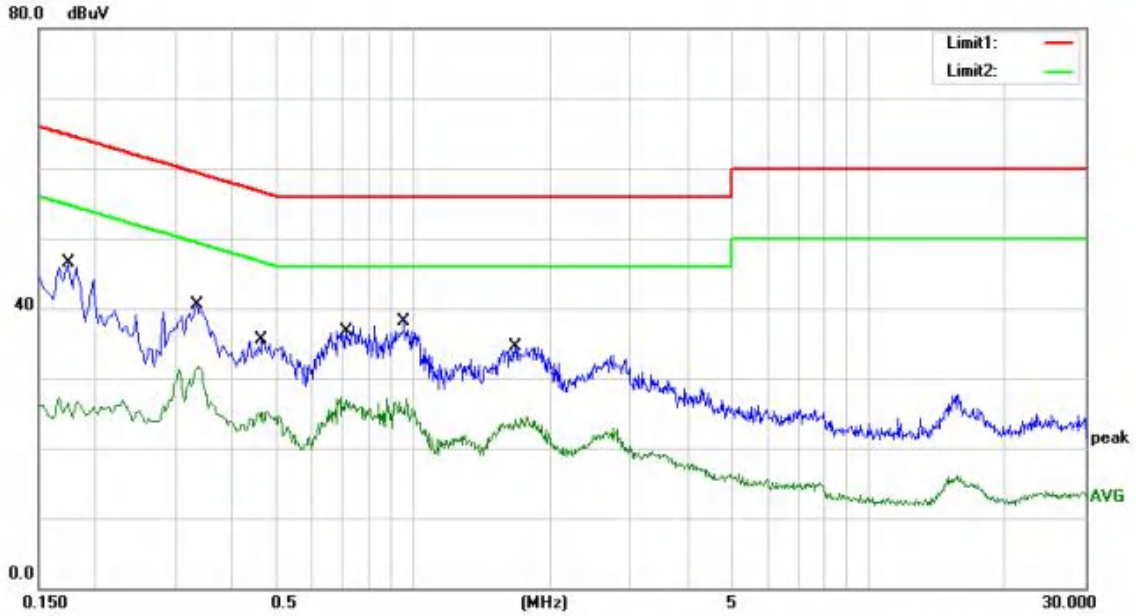


Site site #1 Phase: L1 Temperature: 22.5

| No. | Mk. | Freq. | Reading Level | Correct Factor | Measure-ment | Limit | Over | | |
|---|---|---|---|---|---|---|---|---|---|
| | | MHz | dBuV | dB | dBuV | dBuV | dB | Detector | Comment |
| 1 | | 0.1740 | 29.47 | 17.05 | 46.52 | 64.77 | -18.25 | QP | |
| 2 | | 0.1740 | 9.42 | 17.05 | 26.47 | 54.77 | -28.30 | AVG | |
| 3 | | 0.3340 | 23.51 | 17.08 | 40.59 | 59.35 | -18.76 | QP | |
| 4 | * | 0.3340 | 14.60 | 17.08 | 31.68 | 49.35 | -17.67 | AVG | |
| 5 | | 0.4660 | 18.44 | 17.08 | 35.52 | 56.58 | -21.06 | QP | |
| 6 | | 0.4660 | 8.11 | 17.08 | 25.19 | 46.58 | -21.39 | AVG | |
| 7 | | 0.7140 | 19.78 | 17.01 | 36.79 | 56.00 | -19.21 | QP | |
| 8 | | 0.7140 | 9.95 | 17.01 | 26.96 | 46.00 | -19.04 | AVG | |
| 9 | | 0.9580 | 21.17 | 17.03 | 38.20 | 56.00 | -17.80 | QP | |
| 10 | | 0.9580 | 10.06 | 17.03 | 27.09 | 46.00 | -18.91 | AVG | |
| 11 | | 1.6780 | 17.38 | 17.08 | 34.46 | 56.00 | -21.54 | QP | |
| 12 | | 1.6780 | 7.18 | 17.08 | 24.26 | 46.00 | -21.74 | AVG | |

*:Maximum data x:Over limit !:over margin Comment: Factor build in receiver. Operator: Jian

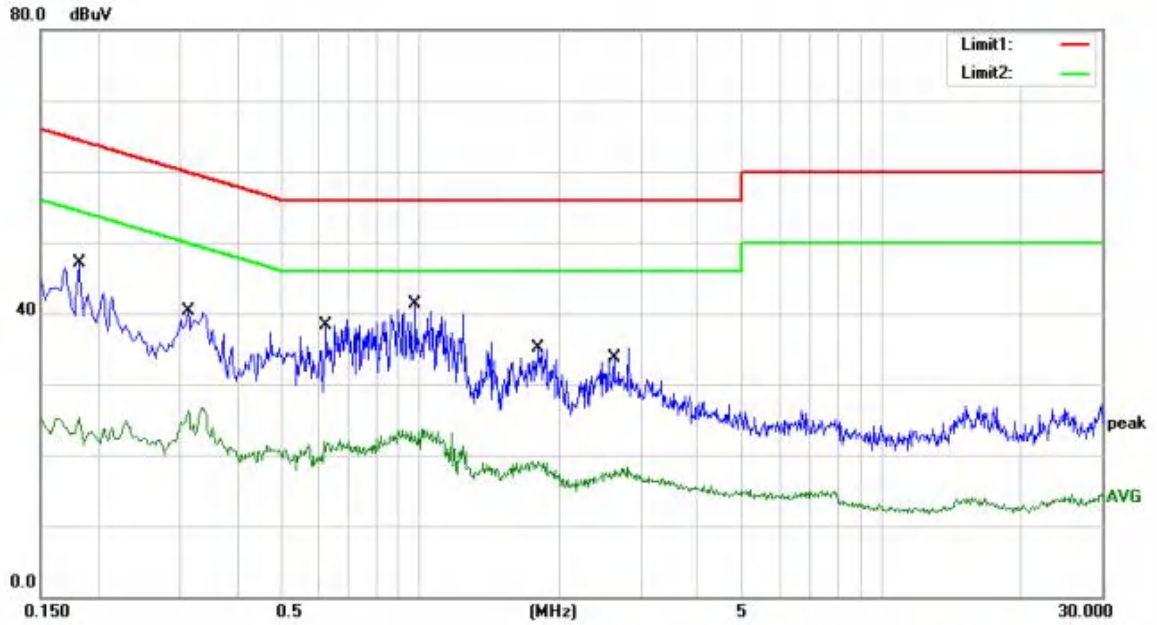


Site site #1 Phase: N Temperature: 22.5

| No. | Mk. | Freq. | Reading Level | Correct Factor | Measure-ment | Limit | Over | | |
|---|---|---|---|---|---|---|---|---|---|
| | | MHz | dBuV | dB | dBuV | dBuV | dB | Detector | Comment |
| 1 | | 0.1820 | 30.13 | 17.04 | 47.17 | 64.39 | -17.22 | QP | |
| 2 | | 0.1820 | 8.32 | 17.04 | 25.36 | 54.39 | -29.03 | AVG | |
| 3 | | 0.3140 | 23.12 | 17.10 | 40.22 | 59.86 | -19.64 | QP | |
| 4 | | 0.3140 | 9.13 | 17.10 | 26.23 | 49.86 | -23.63 | AVG | |
| 5 | | 0.6260 | 21.23 | 17.05 | 38.28 | 56.00 | -17.72 | QP | |
| 6 | | 0.6260 | 4.75 | 17.05 | 21.80 | 46.00 | -24.20 | AVG | |
| 7 | * | 0.9780 | 24.21 | 17.03 | 41.24 | 56.00 | -14.76 | QP | |
| 8 | | 0.9780 | 6.66 | 17.03 | 23.69 | 46.00 | -22.31 | AVG | |
| 9 | | 1.8020 | 18.00 | 17.09 | 35.09 | 56.00 | -20.91 | QP | |
| 10 | | 1.8020 | 2.04 | 17.09 | 19.13 | 46.00 | -26.87 | AVG | |
| 11 | | 2.6260 | 16.68 | 17.05 | 33.73 | 56.00 | -22.27 | QP | |
| 12 | | 2.6260 | 1.18 | 17.05 | 18.23 | 46.00 | -27.77 | AVG | |

*:Maximum data x:Over limit !:over margin Comment: Factor build in receiver. Operator: Jian

## 8.6 ANTENNA APPLICATION

### 8.6.1 Antenna Requirement

| Standard | Requirement |
|---|---|
| FCC CRF Part 15.203 | An intentional radiator shall be designed to ensure that no antenna other than that furnished by the responsible party shall be used with the device. The use of a permanently attached antenna or of an antenna that uses a unique coupling to the intentional radiator shall be considered sufficient to comply with the provisions of this section. The manufacturer may design the unit so that a broken antenna can be replaced by the user, but the use of a standard antenna jack or electrical connector is prohibited. |
| FCC 47 CFR Part 15.407(a) | If transmitting antennas of directional gain greater than 6dBi are used, the power shall be reduced by the amount in dB that the directional gain of the antenna exceeds 6dBi. |
| RSS-Gen Section 6.8 | The applicant for equipment certification shall provide a list of all antenna types that may be used with the transmitter, where applicable (i.e. for transmitters with detachable antenna), indicating the maximum permissible antenna gain (in dBi) and the required impedance for each antenna. The test report shall demonstrate the compliance of the transmitter with the limit for maximum equivalent isotropically radiated power (e.i.r.p.) specified in the applicable RSS, when the transmitter is equipped with any antenna type, selected from this list. |

8.6.2 Result

PASS.

Note: ☑ Antenna use a permanently attached antenna which is not replaceable.
☐ Not using a standard antenna jack or electrical connector for antenna replacement
☐ The antenna has to be professionally installed (please provide method of installation)

Please refer to the attached document Internal Photos to show the antenna connector.

Detail of factor for radiated emission

| Frequency(MHz) | Ant_F(dB) | Cab_L(dB) | Preamp(dB) | Correct Factor(dB) |
|---|---|---|---|---|
| 0.009 | 20.6 | 0.03 | \ | 20.63 |
| 0.15 | 20.7 | 0.1 | \ | 20.8 |
| 1 | 20.9 | 0.15 | \ | 21.05 |
| 10 | 20.1 | 0.28 | \ | 20.38 |
| 30 | 18.8 | 0.45 | \ | 19.25 |
| | | | | |
| 30 | 11.7 | 0.62 | 27.9 | -15.58 |
| 100 | 12.5 | 1.02 | 27.8 | -14.28 |
| 300 | 12.9 | 1.91 | 27.5 | -12.69 |
| 600 | 19.2 | 2.92 | 27 | -4.88 |
| 800 | 21.1 | 3.54 | 26.6 | -1.96 |
| 1000 | 22.3 | 4.17 | 26.2 | 0.27 |
| | | | | |
| 1000 | 25.6 | 1.76 | 41.4 | -14.04 |
| 3000 | 28.9 | 3.27 | 43.2 | -11.03 |
| 5000 | 31.1 | 4.2 | 44.6 | -9.3 |
| 8000 | 36.2 | 5.95 | 44.7 | -2.55 |
| 10000 | 38.4 | 6.3 | 43.9 | 0.8 |
| 12000 | 38.5 | 7.14 | 42.3 | 3.34 |
| 15000 | 40.2 | 8.15 | 41.4 | 6.95 |
| 18000 | 45.4 | 9.02 | 41.3 | 13.12 |
| | | | | |
| 18000 | 37.9 | 1.81 | 47.9 | -8.19 |
| 21000 | 37.9 | 1.95 | 48.7 | -8.85 |
| 25000 | 39.3 | 2.01 | 42.8 | -1.49 |
| 28000 | 39.6 | 2.16 | 46.0 | -4.24 |
| 31000 | 41.2 | 2.24 | 44.5 | -1.06 |
| 34000 | 41.5 | 2.29 | 46.6 | -2.81 |
| 37000 | 43.8 | 2.30 | 46.4 | -0.3 |
| 40000 | 43.2 | 2.50 | 42.2 | 3.5 |

--------- END OF REPORT --------