SAR Test Report

Product Name : Mobile Phone

Model No. : PT-7

Applicant : cellnet 7 HK limited

Address : Room 813, 8/F, Hollywood Plaza, 610 Nathan Road, Kowloon, HongKong

Date of Receipt : Mar. 10, 2011

Date of Test : Mar. 13, 2011

Issued Date : Mar. 14, 2011

Report No. : 113S025R-HP-US-P03V01

Report Version : V1.0

The test results relate only to the samples tested.
The test report shall not be reproduced except in full without the written approval of QuieTek Corporation.

Test Report Certification

Issued Date: Mar. 14, 2011
Report No: 113S025R-HP-US-P03V01

QuieTek

Product Name	:	Mobile Phone
Applicant	:	Cellnet 7 HK limited
Address	:	Room 813, 8/F, Hollywood Plaza, 610 Nathan Road, Kowloon, HongKong
Manufacturer	:	Phone-Talk Technology Co., Ltd.
Address	:	1209, Tower B, Tianan High-Tech Plaza, Phase I, Futian District, Shenzhen China
Model No.	:	PT-7
Trade Name	:	Vibe
EUT Voltage	:	DC 3.7V
Applicable Standard	:	FCC Oet65 Supplement C June 2001 IEEE Std. 1528-2003,47CFR § 2.1093
Test Result	:	Max. SAR Measurement (1g) Head: 0.452 W/kg Body: 0.536 W/kg
Performed Location	:	Suzhou EMC Laboratory No.99 Hongye Rd., Suzhou Industrial Park Loufeng Hi-Tech Development Zone., Suzhou, China TEL: +86-512-6251-5088 / FAX: +86-512-6251-5098 FCC Registration Number: 800392
Documented By	:	Alice Ni (Engineering ADM: Alice Ni)
Tested By	:	Robin Wu (Senior Engineer: Robin Wu)
Approved By	:	Marlin Chen (Engineering Supervisor: Marlin Chen)

Laboratory Information

We, **QuieTek Corporation**, are an independent EMC and safety consultancy that was established the whole facility in our laboratories. The test facility has been accredited/accepted(audited or listed) by the following related bodies in compliance with ISO 17025, EN 45001 and specified testing scope:

Taiwan R.O.C.	**:**	**BSMI, NCC, TAF**
Germany	**:**	**TUV Rheinland**
Norway	**:**	**Nemko, DNV**
USA	**:**	**FCC, NVLAP**
Japan	**:**	**VCCI**

The related certificate for our laboratories about the test site and management system can be downloaded from QuieTek Corporation's Web Site : http://www.quietek.com/tw/ctg/cts/accreditations.htm
The address and introduction of QuieTek Corporation's laboratories can be founded in our Web site : http://www.quietek.com/
If you have any comments, Please don't hesitate to contact us. Our contact information is as below:

HsinChu Testing Laboratory :
No.75-2, 3rd Lin, Wangye Keng, Yonghxing Tsuen, Qionglin Shiang, Hsinchu County 307, Taiwan, R.O.C.
TEL:+886-3-592-8858 / FAX:+886-3-592-8859 E-Mail : service@quietek.com

NVLAP Lab Code : 200347-0

Testing Laboratory 1313

LinKou Testing Laboratory :
No. 5-22, Ruei-Shu Valley, Ruei-Ping Tsuen, Lin-Kou Shiang, Taipei, Taiwan, R.O.C.
TEL : 886-2-8601-3788 / FAX : 886-2-8601-3789 E-Mail : service@quietek.com

NVLAP Lab Code: 200533-0

Testing Laboratory 0914

Suzhou (China) Testing Laboratory :
No. 99 Hongye Rd., Suzhou Industrial Park Loufeng Hi-Tech Development Zone., Suzhou,China.
TEL : +86-512-6251-5088 / FAX : +86-512-6251-5098 E-Mail : service@quietek.com

NVLAP Lab Code : 200743-0

Testing Laboratory 1596

TABLE OF CONTENTS

Description **Page**

1. General Information 6

1.1. EUT Description 6
1.2. Test Environment 6

2. SAR Measurement System 7

2.1. DASY5 System Description 7
2.1.1. Applications 8
2.1.2. Area Scans 8
2.1.3. Zoom Scan (Cube Scan Averaging) 8
2.1.4. Uncertainty of Inter-/Extrapolation and Averaging 8
2.2. DASY5 E-Field Probe 9
2.2.1. Isotropic E-Field Probe Specification 9
2.3. Boundary Detection Unit and Probe Mounting Device 10
2.4. DATA Acquisition Electronics (DAE) and Measurement Server 10
2.5. Robot 11
2.6. Light Beam Unit 11
2.7. Device Holder 12
2.8. SAM Twin Phantom 12

3. Tissue Simulating Liquid 13

3.1. The composition of the tissue simulating liquid 13
3.2. Tissue Calibration Result 14
3.3. Tissue Dielectric Parameters for Head and Body Phantoms 15

4. SAR Measurement Procedure 16

4.1. SAR System Validation 16
4.1.1. Validation Dipoles 16
4.1.2. Validation Result 17
4.2. SAR Measurement Procedure 18

5. SAR Exposure Limits 19

6. Test Equipment List 20

7. Measurement Uncertainty 21

8. Conducted Power Measurement 22

9. Test Results 23

9.1. SAR Test Results Summary 23

Appendix A. SAR System Validation Data 28

Appendix B. SAR measurement Data 32

Appendix C. Test Setup Photographs & EUT Photographs 74

Appendix D. Probe Calibration Data 79

Appendix E. Dipole Calibration Data.....86

Appendix F. DAE Calibration Data.....103

1. General Information

1.1. EUT Description

Product Name	Mobile Phone
Trade Name	Vibe
Model No.	PT-7
IMEI 1	358865032520896
IMEI 2	358865032531091
SW Version	G608RA_F2_IPRO.09.110125
HW Version	G608R V1.0 20100930
Tx Frequency Range	GSM 850: 824~849MHz PCS 1900: 1850~1910MHz
Rx Frequency Range	GSM 850: 869~894MHz PCS 1900: 1930~1990MHz
Antenna Type	Internal
GPRS Class	Class 12
Type of Modulation	GMSK for GSM&GPRS
Device Category	Portable
Peak Antenna Gain	0.8dBi
Max. Output Power (Conducted)	GSM850: 32.85 <SIM 1> PCS1900: 29.74 <SIM 1>
Max. Output Power (Radiated)	GSM850: 30.42 - ERP PCS1900: 28.63 - EIRP
Headset Model Number	PT-7
Battery	Brand Name: HBK Model Name: BL-4U Rated Voltage and Capacitance: 4.2V, 900mAh

1.2. Test Environment

Ambient conditions in the laboratory:

Items	Required	Actual
Temperature (°C)	18-25	21.3± 2
Humidity (%RH)	30-70	52

2. SAR Measurement System

2.1. DASY5 System Description

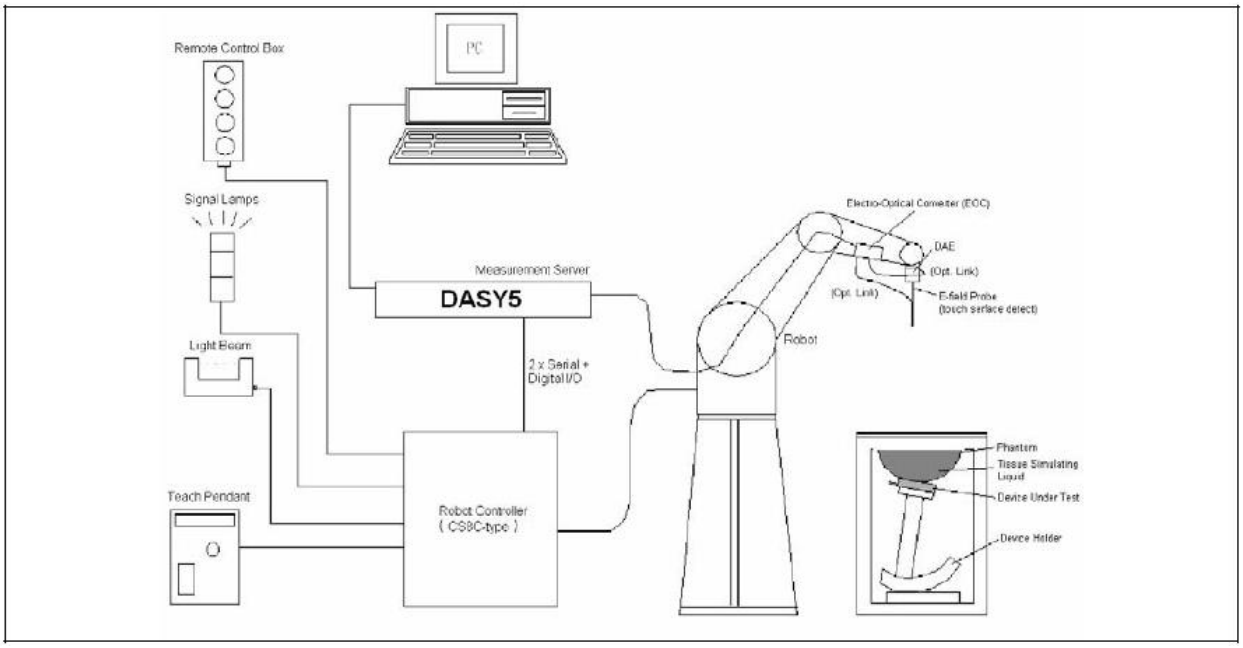

The DASY5 system for performing compliance tests consists of the following items:

- A standard high precision 6-axis robot with controller, teach pendant and software. An arm extension for accommodating the data acquisition electronics (DAE).
- A data acquisition electronics (DAE) which performs the signal amplification, signal multiplexing, AD-conversion, offset measurements, mechanical surface detection, collision detection, etc. The unit is battery powered with standard or rechargeable batteries. The signal is optically transmitted to the EOC.
- The Electro-optical converter (EOC) performs the conversion from optical to electrical signals for the digital communication to the DAE. To use optical surface detection, a special version of the EOC is required. The EOC signal is transmitted to the measurement server.
- The Light Beam used is for probe alignment. This improves the (absolute) accuracy of the probe positioning.
- A computer running WinXP and the DASY5 software.
- Remote control and teach pendant as well as additional circuitry for robot safety such as warning lamps, etc.
- The phantom, the device holder and other accessories according to the targeted measurement.

2.1.1. Applications

Predefined procedures and evaluations for automated compliance testing with all worldwide standards, e.g., IEEE 1528, OET 65, IEC 62209-1, IEC 62209-2, EN 50360, EN 50383 and others.

2.1.2. Area Scans

Area scans are defined prior to the measurement process being executed with a user defined variable spacing between each measurement point (integral) allowing low uncertainty measurements to be conducted. Scans defined for FCC applications utilize a $10mm^2$ step integral, with 1mm interpolation used to locate the peak SAR area used for zoom scan assessments.

When an Area Scan has measured all reachable points, it computes the field maxima found in the scanned area, within a range of the global maximum. The range (in dB) is specified in the standards for compliance testing. For example, a 2 dB range is required in IEEE 1528-2003, EN 50361 and IEC 62209 standards, whereby 3 dB is a requirement when compliance is assessed in accordance with the ARIB standard (Japan).

2.1.3. Zoom Scan (Cube Scan Averaging)

Zoom Scans are used to assess the peak spatial SAR values within a cubic averaging volume containing 1 g and 10 g of simulated tissue. A density of 1000 kg/m^3 is used to represent the head and body tissue density and not the phantom liquid density, in order to be consistent with the definition of the liquid dielectric properties, i.e. the side length of the 1 g cube is 10mm, with the side length of the 10 g cube 21,5mm.

The zoom scan integer steps can be user defined so as to reduce uncertainty, but normal practice for typical test applications utilize a physical step of 7x7x7 (5mmx5mmx5mm) providing a volume of 30mm in the X & Y axis, and 30mm in the Z axis.

2.1.4. Uncertainty of Inter-/Extrapolation and Averaging

In order to evaluate the uncertainty of the interpolation, extrapolation and averaged SAR calculation algorithms of the Postprocessor, DASY5 allows the generation of measurement grids which are artificially predefined by analytically based test functions. Therefore, the grids of area scans and zoom scans can be filled with uncertainty test data, according to the SAR benchmark functions of IEEE 1528.The three analytical functions shown in equations as below are used to describe the possible range of the expected SAR distributions for the tested handsets. The field gradients are covered by the spatially flat distribution f1, the spatially steep distribution f3 and f2 accounts for H-field cancellation on the phantom/tissue surface.

$$f_1(x,y,z) = Ae^{-\frac{z}{2a}} \cos^2\left(\frac{\pi}{2}\frac{\sqrt{x'^2+y'^2}}{5a}\right)$$

$$f_2(x,y,z) = Ae^{-\frac{z}{a}} \frac{a^2}{a^2+x'^2}\left(3-e^{-\frac{2z}{a}}\right)\cos^2\left(\frac{\pi}{2}\frac{y'}{3a}\right)$$

$$f_3(x,y,z) = A\frac{a^2}{\frac{a^2}{4}+x'^2+y'^2}\left(e^{-\frac{2z}{a}}+\frac{a^2}{2(a+2z)^2}\right)$$

2.2. DASY5 E-Field Probe

The SAR measurement is conducted with the dosimetric probe manufactured by SPEAG. The probe is specially designed and calibrated for use in liquid with high permittivity. The dosimetric probe has special calibration in liquid at different frequency.

SPEAG conducts the probe calibration in compliance with international and national standards (e.g. IEEE 1528, EN 62209-1, IEC 62209, etc.) under ISO 17025. The calibration data are in Appendix D.

2.2.1. Isotropic E-Field Probe Specification

Model	EX3DV4	
Construction	Symmetrical design with triangular core Built-in shielding against static charges PEEK enclosure material (resistant to organic solvents, e.g., DGBE)	
Frequency	10 MHz to 6 GHz Linearity: ± 0.2 dB (30 MHz to 6 GHz)	
Directivity	± 0.3 dB in HSL (rotation around probe axis) ± 0.5 dB in tissue material (rotation normal to probe axis)	
Dynamic Range	10 μW/g to 100 mW/g Linearity: ± 0.2 dB (noise: typically < 1 μW/g)	
Dimensions	Overall length: 330 mm (Tip: 20 mm) Tip diameter: 2.5 mm (Body: 12 mm) Typical distance from probe tip to dipole centers: 1 mm	
Application	High precision dosimetric measurements in any exposure scenario (e.g., very strong gradient fields). Only probe which enables compliance testing for frequencies up to 6 GHz with precision of better 30%.	

2.3. Boundary Detection Unit and Probe Mounting Device

The DASY probes use a precise connector and an additional holder for the probe, consisting of a plastic tube and a flexible silicon ring to center the probe. The connector at the DAE is flexibly mounted and held in the default position with magnets and springs. Two switching systems in the connector mount detect frontal and lateral probe collisions and trigger the necessary software response.

2.4. DATA Acquisition Electronics (DAE) and Measurement Server

The data acquisition electronics (DAE) consists of a highly sensitive electrometer-grade preamplifier with auto-zeroing, a channel and gain-switching multiplexer, a fast 16 bit AD-converter and a command decoder and control logic unit.

Transmission to the measurement server is accomplished through an optical downlink for data and status information as well as an optical uplink for commands and the clock.

The input impedance of the DAE4 is 200M Ohm; the inputs are symmetrical and floating. Common mode rejection is above 80dB.

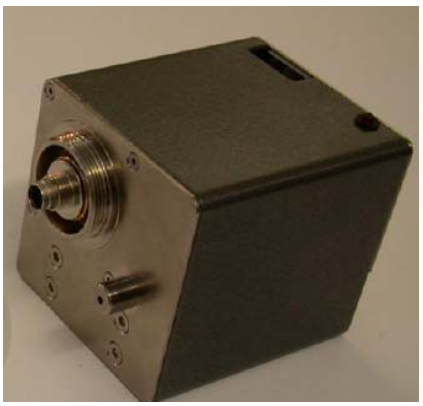

The DASY5 measurement server is based on a PC/104 CPU board with a 400MHz intel ULV Celeron, 128MB chipdisk and 128MB RAM. The necessary circuits for communication with the DAE electronics box, as well as the 16 bit AD converter system for optical detection and digital I/O interface are contained on the DASY5 I/O board, which is directly connected to the PC/104 bus of the CPU board.

2.5. Robot

The DASY5 system uses the high precision robots TX90 XL type out of the newer series from Stäubli SA (France). For the 6-axis controller DASY5 system, the CS8C robot controller version from Stäubli is used.

The XL robot series have many features that are important for our application:

- High precision (repeatability 0.02 mm)
- High reliability (industrial design)
- Jerk-free straight movements
- Low ELF interference (the closed metallic construction shields against motor control fields)
- 6-axis controller

2.6. Light Beam Unit

The light beam switch allows automatic "tooling" of the probe. During the process, the actual position of the probe tip with respect to the robot arm is measured, as well as the probe length and the horizontal probe offset. The software then corrects all movements, such that the robot coordinates are valid for the probe tip.

The repeatability of this process is better than 0.1 mm. If a position has been taught with an aligned probe, the same position will be reached with another aligned probe within 0.1 mm, even if the other probe has different dimensions. During probe rotations, the probe tip will keep its actual position.

2.7. Device Holder

The DASY5 device holder is designed to cope with different positions given in the standard. It has two scales for the device rotation (with respect to the body axis) and the device inclination (with respect to the line between the ear reference points). The rotation center for both scales is the ear reference point (EPR).

Thus the device needs no repositioning when changing the angles.

The DASY5 device holder has been made out of low-loss POM material having the following dielectric parameters: relative permittivity εr =3 and loss tangent δ = 0.02. The amount of dielectric material has been reduced in the closest vicinity of the device, since measurements have suggested that the influence of the clamp on the test results could thus be lowered.

2.8. SAM Twin Phantom

The SAM twin phantom is a fiberglass shell phantom with 2mm shell thickness (except the ear region where shell thickness increases to 6mm). It has three measurement areas:

- Left head
- Right head
- Flat phantom

The bottom plate contains three pair of bolts for locking the device holder. The device holder positions are adjusted to the standard measurement positions in the three sections. A white cover is provided to tap the phantom during off-periods to prevent water evaporation and changes in the liquid parameters. On the phantom top, three reference markers are provided to identify the phantom position with respect to the robot.

3. Tissue Simulating Liquid

3.1. The composition of the tissue simulating liquid

INGREDIENT (% Weight)	835MHz Head	835MHz Body	1900MHz Head	1900MHz Body
Water	40.45	52.4	54.90	40.5
Salt	1.45	1.40	0.18	0.50
Sugar	57.6	45.0	0.00	58.0
HEC	0.40	1.00	0.00	0.50
Preventol	0.10	0.20	0.00	0.50
DGBE	0.00	0.00	44.92	0.00

3.2. Tissue Calibration Result

The dielectric parameters of the liquids were verified prior to the SAR evaluation using DASY5 Dielectric Probe Kit and Agilent Vector Network Analyzer E5071C

Head Tissue Simulant Measurement				
Frequency [MHz]	Description	Dielectric Parameters		Tissue Temp. [°C]
		ε_r	σ [s/m]	
835 MHz	Reference result ± 5% window	41.50 39.43 to 43.58	0.90 0.86 to 0.95	N/A
	13-Mar-2011	41.40	0.92	21.0

Body Tissue Simulant Measurement				
Frequency [MHz]	Description	Dielectric Parameters		Tissue Temp. [°C]
		ε_r	σ [s/m]	
835 MHz	Reference result ± 5% window	55.20 52.44 to 57.96	0.97 0.92 to 1.02	N/A
	13-Mar-2011	54.20	0.99	21.0

Head Tissue Simulant Measurement				
Frequency [MHz]	Description	Dielectric Parameters		Tissue Temp. [°C]
		ε_r	σ [s/m]	
1900 MHz	Reference result ± 5% window	40.0 38.00 to 42.00	1.40 1.33 to 1.47	N/A
	13-Mar-2011	39.10	1.45	21.2

Body Tissue Simulant Measurement				
Frequency [MHz]	Description	Dielectric Parameters		Tissue Temp. [°C]
		ε_r	σ [s/m]	
1900 MHz	Reference result ± 5% window	53.30 50.64 to 55.97	1.52 1.44 to 1.60	N/A
	13-Mar-2011	53.00	1.55	21.2

3.3. Tissue Dielectric Parameters for Head and Body Phantoms

The head tissue dielectric parameters recommended by the IEEE SCC-34/SC-2 in P1528 have been incorporated in the following table. These head parameters are derived from planar layer models simulating the highest expected SAR for the dielectric properties and tissue thickness variations in a human head. Other head and body tissue parameters that have not been specified in P1528 are derived from the tissue dielectric parameters computed from the 4-Cole-Cole equations described in Reference [12] and extrapolated according to the head parameters specified in P1528.

Target Frequency	Head		Body	
(MHz)	ε_r	σ (S/m)	ε_r	σ (S/m)
150	52.3	0.76	61.9	0.80
300	45.3	0.87	58.2	0.92
450	43.5	0.87	56.7	0.94
835	**41.5**	**0.90**	**55.2**	**0.97**
900	41.5	0.97	55.0	1.05
915	41.5	0.98	55.0	1.06
1450	40.5	1.20	54.0	1.30
1610	40.3	1.29	53.8	1.40
1800 – 2000	**40.0**	**1.40**	**53.3**	**1.52**
2450	39.2	1.80	52.7	1.95
3000	38.5	2.40	52.0	2.73
5800	35.3	5.27	48.2	6.00

(ε_r = relative permittivity, σ = conductivity and ρ = 1000 kg/m^3)

4. SAR Measurement Procedure

4.1. SAR System Validation

4.1.1. Validation Dipoles

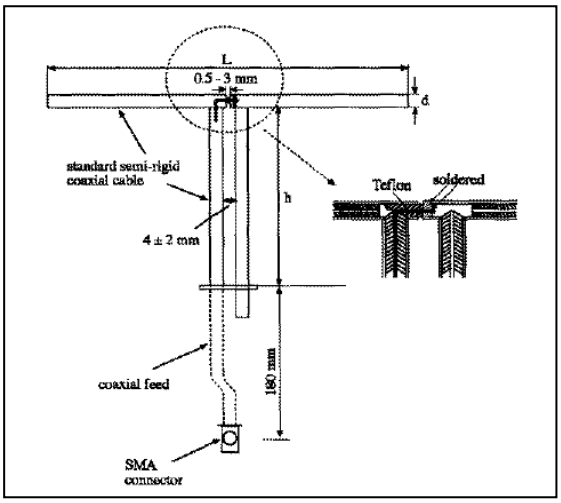

The dipoles used is based on the IEEE-1528 standard, and is complied with mechanical and electrical specifications in line with the requirements of both IEEE and FCC Supplement C. the table below provides details for the mechanical and electrical specifications for the dipoles.

Frequency	L (mm)	h (mm)	d (mm)
835MHz	165.0	900	3.6
1900MHz	68.0	39.5	3.6

4.1.2. Validation Result

System Performance Check at 835MHz &1900MHz for Head

Validation Kit: D835V2-SN 4d094

Frequency [MHz]	Description	SAR [w/kg] 1g	SAR [w/kg] 10g	Tissue Temp. [°C]
835 MHz	Reference result ± 10% window	9.70 8.73 to 10.67	6.30 5.67 to 6.93	N/A
	13-Mar-2011	10.04	6.52	21.0

Validation Kit: D1900V2-SN 5d121

Frequency [MHz]	Description	SAR [w/kg] 1g	SAR [w/kg] 10g	Tissue Temp. [°C]
1900 MHz	Reference result ± 10% window	39.8 35.82 to 43.78	21.1 18.99 to 23.21	N/A
	13-Mar-2011	42.00	21.32	21.0

Note: All SAR values are normalized to 1W forward power.

System Performance Check at 835MHz &1900MHz for Body

Validation Kit: D835V2-SN 4d094

Frequency [MHz]	Description	SAR [w/kg] 1g	SAR [w/kg] 10g	Tissue Temp. [°C]
835 MHz	Reference result ± 10% window	9.90 8.91 to 10.89	6.53 5.88 to 7.18	N/A
	13-Mar-2011	10.36	6.68	21.0

Validation Kit: D1900V2-SN 5d121

Frequency [MHz]	Description	SAR [w/kg] 1g	SAR [w/kg] 10g	Tissue Temp. [°C]
1900 MHz	Reference result ± 10% window	41.4 37.26 to 45.54	22.3 20.07 to 24.53	N/A
	13-Mar-2011	39.60	20.28	21.0

Note: All SAR values are normalized to 1W forward power.

4.2. SAR Measurement Procedure

The ALSAS-10U calculates SAR using the following equation,

$$SAR = \frac{\sigma |E|^2}{\rho}$$

σ: represents the simulated tissue conductivity
ρ: represents the tissue density

The EUT is set to transmit at the required power in line with product specification, at each frequency relating to the LOW, MID, and HIGH channel settings.

Pre-scans are made on the device to establish the location for the transmitting antenna, using a large area scan in either air or tissue simulation fluid.

The EUT is placed against the Universal Phantom where the maximum area scan dimensions are larger than the physical size of the resonating antenna. When the scan size is not large enough to cover the peak SAR distribution, it is modified by either extending the area scan size in both the X and Y directions, or the device is shifted within the predefined area.

The area scan is then run to establish the peak SAR location (interpolated resolution set at $1mm^2$) which is then used to orient the center of the zoom scan. The zoom scan is then executed and the 1g and 10g averages are derived from the zoom scan volume (interpolated resolution set at $1mm^3$).

5. SAR Exposure Limits

SAR assessments have been made in line with the requirements of IEEE-1528, FCC Supplement C, and comply with ANSI/IEEE C95.1-1992 “Uncontrolled Environments” limits. These limits apply to a location which is deemed as “Uncontrolled Environment” which can be described as a situation where the general public may be exposed to an RF source with no prior knowledge or control over their exposure.

Limits for General Population/Uncontrolled Exposure (W/kg)

Type Exposure	Uncontrolled Environment Limit
Spatial Peak SAR (1g cube tissue for brain or body)	1.60 W/kg
Spatial Average SAR (whole body)	0.08 W/kg
Spatial Peak SAR (10g for hands, feet, ankles and wrist)	4.00 W/kg

6. Test Equipment List

Instrument	Manufacturer	Model No.	Serial No.	Last Calibration	Next Calibration
Stäubli Robot TX60L	Stäubli	TX60L	F10/5C90A1/A/01	2010.03.10	only once
Controller	Stäubli	SP1	S-0034	2010.03.10	only once
Dipole Validation Kits	SPEAG	D835V2	4d094	2010.04.10	2012.04.10
Dipole Validation Kits	SPEAG	D1900V2	5d121	2010.04.10	2012.04.10
SAM Twin Phantom	Speag	SAM	TP-1561/1562	N/A	N/A
Device Holder	Speag	SD 000 H01 HA	N/A	N/A	N/A
Data Acquisition Electronic	Speag	DAE4	1220	2010.12.03	2012.12.03
E-Field Probe	Speag	EX3DV4	3710	2011.02.25	2012.02.25
SAR Software	Speag	DASY5	V5.2 Build 162	N/A	N/A
Power Amplifier	Mini-Circuit	ZVA-183-S+	N657400950	N/A	N/A
Directional Coupler	Agilent	778D	20160	N/A	N/A
Universal Radio Communication Tester	R&S	CMU 200	117088	2010.07.12	2011.07.12
Vector Network	Agilent	E5071C	MY48367267	2010.04.10	2011.04.10
Signal Generator	Agilent	E4438C	MY49070163	2010.04.23	2011.04.23
Power Meter	Anritsu	ML2495A	0905006	2011.01.12	2012.01.12
Wide Bandwidth Sensor	Anritsu	MA2411B	0846014	2011.01.12	2012.01.12

7. Measurement Uncertainty

DASY5 Uncertainty								
Error Description	Uncert. value	Prob. Dist.	Div.	(c_i) 1g	(c_i) 10g	Std. Unc. (1g)	Std. Unc. (10g)	(v_i) v_{eff}
Measurement System								
Probe Calibration	±5.5%	N	1	1	1	±5.5%	±5.5%	∞
Axial Isotropy	±4.7%	R	$\sqrt{3}$	0.7	0.7	±1.9%	±1.9%	∞
Hemispherical Isotropy	±9.6%	R	$\sqrt{3}$	0.7	0.7	±3.9%	±3.9%	∞
Boundary Effects	±1.0%	R	$\sqrt{3}$	1	1	±0.6%	±0.6%	∞
Linearity	±4.7%	R	$\sqrt{3}$	1	1	±2.7%	±2.7%	∞
System Detection Limits	±1.0%	R	$\sqrt{3}$	1	1	±0.6%	±0.6%	∞
Readout Electronics	±0.3%	N	1	1	1	±0.3%	±0.3%	∞
Response Time	±0.8%	R	$\sqrt{3}$	1	1	±0.5%	±0.5%	∞
Integration Time	±2.6%	R	$\sqrt{3}$	1	1	±1.5%	±1.5%	∞
RF Ambient Noise	±3.0%	R	$\sqrt{3}$	1	1	±1.7%	±1.7%	∞
RF Ambient Reflections	±3.0%	R	$\sqrt{3}$	1	1	±1.7%	±1.7%	∞
Probe Positioner	±0.4%	R	$\sqrt{3}$	1	1	±0.2%	±0.2%	∞
Probe Positioning	±2.9%	R	$\sqrt{3}$	1	1	±1.7%	±1.7%	∞
Max. SAR Eval.	±1.0%	R	$\sqrt{3}$	1	1	±0.6%	±0.6%	∞
Test Sample Related								
Device Positioning	±2.9%	N	1	1	1	±2.9%	±2.9%	145
Device Holder	±3.6%	N	1	1	1	±3.6%	±3.6%	5
Power Drift	±5.0%	R	$\sqrt{3}$	1	1	±2.9%	±2.9%	∞
Phantom and Setup								
Phantom Uncertainty	±4.0%	R	$\sqrt{3}$	1	1	±2.3%	±2.3%	∞
Liquid Conductivity (target)	±5.0%	R	$\sqrt{3}$	0.64	0.43	±1.8%	±1.2%	∞
Liquid Conductivity (meas.)	±2.5%	N	1	0.64	0.43	±1.6%	±1.1%	∞
Liquid Permittivity (target)	±5.0%	R	$\sqrt{3}$	0.6	0.49	±1.7%	±1.4%	∞
Liquid Permittivity (meas.)	±2.5%	N	1	0.6	0.49	±1.5%	±1.2%	∞
Combined Std. Uncertainty						±10.7%	±10.5%	387
Expanded STD Uncertainty						±21.5%	±21.0%	

8. Conducted Power Measurement

Mode	Frequency (MHz)	Output Power (dBm)	Path Loss (dB)	Result (dBm)
Maximum Power (SIM 1)				
GSM850	824.2	32.15	0.7	**32.85**
	836.6	31.94	0.7	32.64
	848.8	31.78	0.7	32.48
PCS1900	1850.2	28.74	1.0	**29.74**
	1880.0	28.52	1.0	29.52
	1909.8	28.30	1.0	29.30
GPRS850 2slot	824.2	31.03	0.7	31.73
	836.6	30.88	0.7	31.58
	848.8	30.65	0.7	31.35
GPRS850 3slot	824.2	29.73	0.7	30.43
	836.6	29.57	0.7	30.27
	848.8	29.42	0.7	30.12
GPRS850 4slot	824.2	28.16	0.7	28.86
	836.6	28.05	0.7	28.75
	848.8	27.86	0.7	28.56
GPRS1900 2slot	1850.2	27.97	1.0	28.97
	1880.0	27.76	1.0	28.76
	1909.8	27.63	1.0	28.63
GPRS1900 3slot	1850.2	26.06	1.0	27.06
	1880.0	25.97	1.0	26.97
	1909.8	25.95	1.0	26.95
GPRS1900 4slot	1850.2	24.83	1.0	25.83
	1880.0	24.72	1.0	25.72
	1909.8	24.64	1.0	25.64
Maximum Power (SIM 2)				
GSM850	836.6	31.91	0.7	32.61
PCS1900	1880.0	28.47	1.0	29.47

Note: All SAR testing was done in SIM 1.

9. Test Results

9.1. SAR Test Results Summary

9.1.1. Test position and configuration

Head SAR was performed with the device configured in the positions according to IEEE1528, and Body SAR was performed with the device 15mm from the phantom. Body SAR was also performed with the headset attached and without.

9.1.2. Body SAR without Headset

Testing without the headset was performed at the position and channels that resulted in the highest body SAR. This testing was performed with GPRS transmitting with 4 uplink timeslots. This operation mode represents the maximum SAR situation, when downloading data via GPRS and listening to music by headset. SAR without the headset attached was significantly higher than with the headset, and also was verified several times and confirmed, so the final test data shown were the worst case without headset.

In the Body SAR test result table, body-worn means display of device down, body-front means display of device up.

9.1.3. GPRS Operation Mode

This is a multislot class 12 device capable of 2/3/4 uplink timeslots. During the head SAR test, the device was transmitting with 1 uplink timeslot; during the body SAR test, it was transmitting with 4 uplink timeslots. Additionally, this device doesn’t support dual transfer mode (DTM).

9.1.4. Referenced Documents

FCC KDB 447498 D01 V04 and KDB 941225 D03 V01

9.1.5. Test Result

SAR MEASUREMENT							
Ambient Temperature (°C) : 21.5 ±2				Relative Humidity (%): 54			
Liquid Temperature (°C) : 21.0 ±2				Depth of Liquid (cm):>15			
Product: Mobile Phone							
Test Mode: GSM850 <SIM 1>							
Test Position Head	Antenna Position	Frequency		Conducted Power (dBm)	Power Drift (<±0.2)	SAR 1g (W/kg)	Limit (W/kg)
		Channel	MHz				
Left-Cheek	Fixed	128	824.2	32.85	-0.050	0.411	1.6
Left-Cheek	Fixed	189	836.6	32.64	-0.132	0.334	1.6
Left-Cheek	Fixed	251	848.8	32.48	-0.025	0.215	1.6
Left-Tilted	Fixed	189	836.6	32.64	0.113	0.292	1.6
Right-Cheek	Fixed	128	824.2	32.85	-0.023	**0.414**	1.6
Right-Cheek	Fixed	189	836.6	32.64	-0.008	0.341	1.6
Right-Cheek	Fixed	251	848.8	32.48	0.015	0.287	1.6
Right-Tilted	Fixed	189	836.6	32.64	-0.065	0.240	1.6
Test Mode: GSM850 <SIM 2>							
Right-Cheek	Fixed	189	836.6	32.61	0.046	0.328	1.6

SAR MEASUREMENT

Ambient Temperature (°C) : 21.5 ±2 Relative Humidity (%): 54

Liquid Temperature (°C) : 21.0 ±2 Depth of Liquid (cm):>15

Product: Mobile Phone

Test Mode: GSM850

Test Position Body	Antenna Position	Frequency		Conducted Power (dBm)	Power Drift (<±0.2)	SAR 1g (W/kg)	Limit (W/kg)
		Channel	MHz				
Body-worn	Fixed	128	824.2	32.85	0.096	0.241	1.6
Body-worn	Fixed	189	836.6	32.64	-0.023	0.165	1.6
Body-worn	Fixed	251	848.8	32.48	-0.077	0.187	1.6
Body-front	Fixed	189	836.6	32.64	0.102	0.133	1.6
Test Mode: GPRS850 2slot							
Body-worn	Fixed	189	836.6	31.58	0.054	0.431	1.6
Test Mode: GPRS850 3slot							
Body-worn	Fixed	128	824.2	30.43	0.031	**0.536**	1.6
Body-worn	Fixed	189	836.6	30.27	-0.006	0.446	1.6
Body-worn	Fixed	251	848.8	30.12	-0.016	0.370	1.6
Body-front	Fixed	189	836.6	30.27	0.030	0.294	1.6
Body-worn (with headset)	Fixed	189	836.6	30.27	0.066	0.192	1.6
Test Mode: GPRS850 4slot							
Body-worn	Fixed	189	836.6	28.75	0.033	0.437	1.6

SAR MEASUREMENT

Ambient Temperature (°C) : 21.5 ±2 Relative Humidity (%): 52

Liquid Temperature (°C) : 21.0 ±2 Depth of Liquid (cm):>15

Product: Mobile Phone

Test Mode: PCS1900 <SIM 1>

Test Position Head	Antenna Position	Frequency		Conducted Power (dBm)	Power Drift (<±0.2)	SAR 1g (W/kg)	Limit (W/kg)
		Channel	MHz				
Left-Cheek	Fixed	512	1850.2	29.74	-0.024	**0.452**	1.6
Left-Cheek	Fixed	661	1880.0	29.52	-0.057	0.294	1.6
Left-Cheek	Fixed	810	1909.8	29.30	0.024	0.285	1.6
Left-Tilted	Fixed	661	1880.0	29.52	-0.015	0.269	1.6
Right-Cheek	Fixed	512	1850.2	29.74	0.017	0.332	1.6
Right-Cheek	Fixed	661	1880.0	29.52	-0.088	0.253	1.6
Right-Cheek	Fixed	810	1909.8	29.30	-0.024	0.208	1.6
Right-Tilted	Fixed	661	1880.0	29.52	-0.006	0.218	1.6
Test Mode: PCS1900 <SIM 2>							
Left-Cheek	Fixed	661	1880.0	29.47	-0.025	0.302	1.6

SAR MEASUREMENT

Ambient Temperature (°C) : 21.5 ±2 Relative Humidity (%): 52

Liquid Temperature (°C) : 21.0 ±2 Depth of Liquid (cm):>15

Product: Mobile Phone

Test Mode: PCS1900

Test Position Body	Antenna Position	Frequency		Conducted Power (dBm)	Power Drift (<±0.2)	SAR 1g (W/kg)	Limit (W/kg)
		Channel	MHz				
Body-worn	Fixed	512	1850.2	29.74	-0.022	0.104	1.6
Body-worn	Fixed	661	1880.0	29.52	0.048	0.081	1.6
Body-worn	Fixed	810	1909.8	29.30	-0.054	0.087	1.6
Body-front	Fixed	661	1880.0	29.52	0.079	0.067	1.6
Test Mode: GPRS1900 2slot							
Body-worn	Fixed	661	1880.0	28.76	-0.003	0.194	1.6
Test Mode: GPRS1900 3slot							
Body-worn	Fixed	661	1880.0	26.97	0.106	0.133	1.6
Test Mode: GPRS1900 4slot							
Body-worn	Fixed	512	1850.2	25.83	-0.074	0.220	1.6
Body-worn	Fixed	661	1880.0	25.72	-0.179	**0.258**	1.6
Body-worn	Fixed	810	1909.8	25.64	0.074	0.222	1.6
Body-front	Fixed	661	1880.0	25.72	0.056	0.163	1.6
Body-worn (with headset)	Fixed	661	1880.0	25.72	0.020	0.179	1.6

Appendix A. SAR System Validation Data

Date/Time: 13-Mar-2011

Test Laboratory: QuieTek Lab

System Check Head 835MHz

DUT: Dipole 835 MHz D835V2; Type: D835V2

Communication System: CW; Communication System Band: D835 (835.0 MHz); Duty Cycle: 1:1;

Frequency: 835 MHz; Medium parameters used: f = 835 MHz; σ = 0.92 mho/m; εr = 41.4; ρ = 1000 kg/m3 ;

Phantom section: Flat Section ; Input Power=250mW

Ambient temperature (℃): 21.5, Liquid temperature (℃): 21.0

DASY5 Configuration:

- Probe: EX3DV4 - SN3710; ConvF(3.843, 4.303, 4.435); Calibrated: 2011/2/25
- Sensor-Surface: 4mm (Mechanical Surface Detection)
- Electronics: DAE4 Sn1220; Calibrated: 2010/12/3
- Phantom: SAM1; Type: SAM; Serial: TP1561
- Measurement SW: DASY5, V5.2 Build 162; SEMCAD X Version 14.0 Build 59

Configuration/System Check GSM850 Head/Area Scan (6x19x1): Measurement grid: dx=10mm, dy=10mm

Maximum value of SAR (measured) = 2.59 mW/g

Configuration/System Check GSM850 Head/Zoom Scan (7x7x7)/Cube 0: Measurement grid: dx=5mm, dy=5mm, dz=5mm, Reference Value = 54.6 V/m; Power Drift = 0.001 dB

Peak SAR (extrapolated) = 3.83 W/kg

SAR(1 g) = 2.51 mW/g; SAR(10 g) = 1.63 mW/g Maximum value of SAR (measured) = 2.71 mW/g

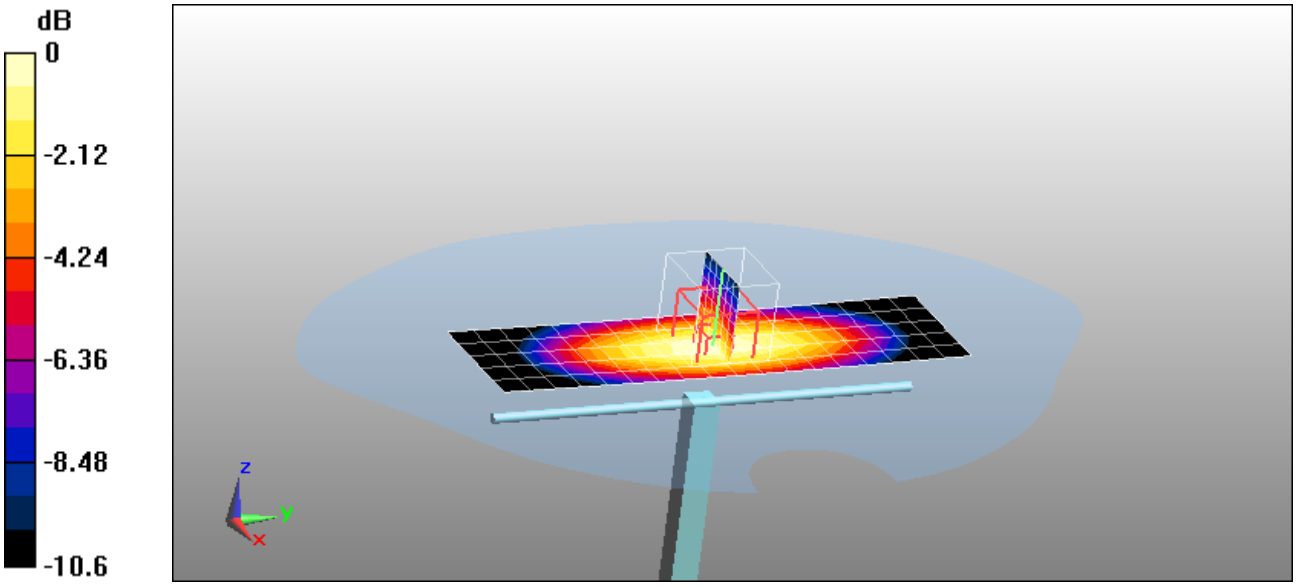

0 dB = 2.71mW/g

Date/Time: 13-Mar-2011

Test Laboratory: QuieTek Lab

System Check Body 835MHz

DUT: Dipole 835 MHz D835V2; Type: D835V2

Communication System: CW; Communication System Band: D835 (835.0 MHz); Duty Cycle: 1:1;

Frequency: 835 MHz; Medium parameters used: f = 835 MHz; σ = 0.99 mho/m; εr = 54.2; ρ = 1000 kg/m3 ;

Phantom section: Flat Section ; Input Power=250mW

Ambient temperature (℃): 21.5, Liquid temperature (℃): 21.0

DASY5 Configuration:

- Probe: EX3DV4 - SN3710; ConvF(4.438, 4.985, 5.123); Calibrated: 2011/2/25
- Sensor-Surface: 4mm (Mechanical Surface Detection)
- Electronics: DAE4 Sn1220; Calibrated: 2010/12/3
- Phantom: SAM1; Type: SAM; Serial: TP1561
- Measurement SW: DASY5, V5.2 Build 162; SEMCAD X Version 14.0 Build 59

Configuration/System Check GSM835 Body/Area Scan (8x16x1): Measurement grid: dx=10mm, dy=10mm

Maximum value of SAR (measured) = 2.65 mW/g

Configuration/System Check GSM835 Body/Zoom Scan (7x7x7)/Cube 0: Measurement grid: dx=5mm, dy=5mm, dz=5mm, Reference Value = 53.2 V/m; Power Drift = 0.017 dB

Peak SAR (extrapolated) = 3.94 W/kg

SAR(1 g) = 2.59 mW/g; SAR(10 g) = 1.67 mW/g Maximum value of SAR (measured) = 2.8 mW/g

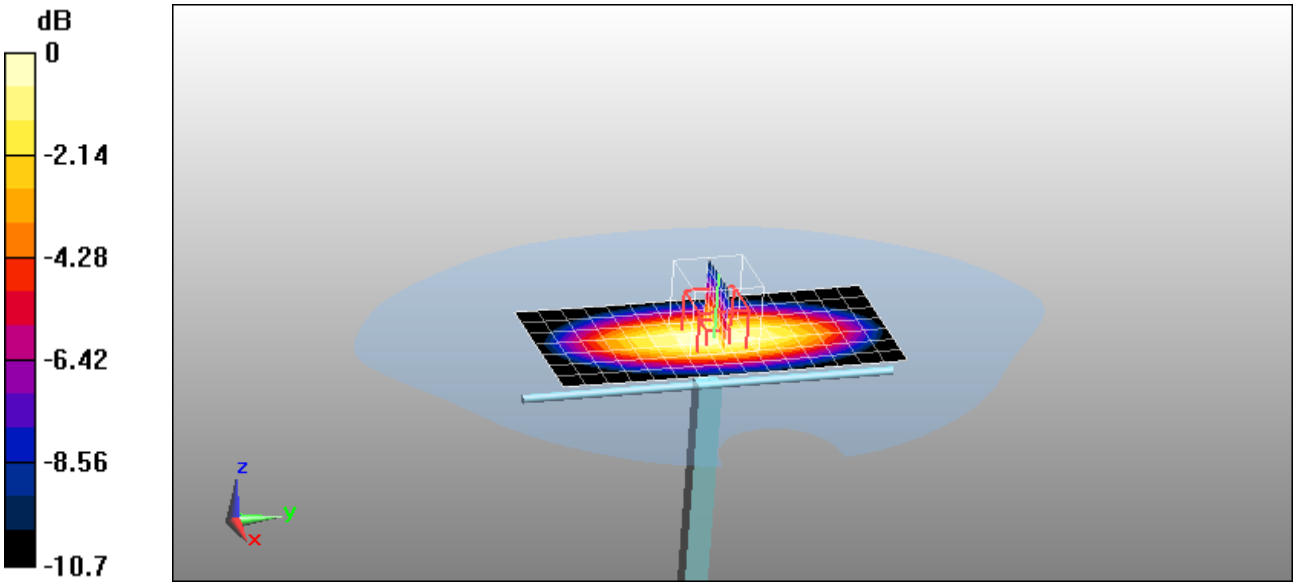

0 dB = 2.8mW/g

Date/Time: 13-Mar-2011

Test Laboratory: QuieTek Lab

System Check Head 1900MHz

DUT: Dipole 1900 MHz D1900V2; Type: D1900V2

Communication System: CW; Communication System Band: D1900 (1900.0 MHz); Duty Cycle: 1:1;

Frequency: 1900 MHz; Medium parameters used: f = 1900 MHz; σ = 1.45 mho/m; εr = 39.1; ρ = 1000 kg/m3 ;

Phantom section: Flat Section ; Input Power=250mW

Ambient temperature (℃): 21.5, Liquid temperature (℃): 21.0

DASY5 Configuration:

- Probe: EX3DV4 - SN3710; ConvF(3.609, 4.015, 4.146); Calibrated: 2011/2/25
- Sensor-Surface: 4mm (Mechanical Surface Detection)
- Electronics: DAE4 Sn1220; Calibrated: 2010/12/3
- Phantom: SAM2; Type: SAM; Serial: TP1562
- Measurement SW: DASY5, V5.2 Build 162; SEMCAD X Version 14.0 Build 59

Configuration/System Check PCS1900 Head/Area Scan (6x11x1): Measurement grid: dx=10mm, dy=10mm

Maximum value of SAR (measured) = 10.8 mW/g

Configuration/System Check PCS1900 Head/Zoom Scan (7x7x7)/Cube 0: Measurement grid: dx=5mm, dy=5mm, dz=5mm, Reference Value = 89.9 V/m; Power Drift = -0.018 dB

Peak SAR (extrapolated) = 20.2 W/kg

SAR(1 g) = 10.5 mW/g; SAR(10 g) = 5.33 mW/g Maximum value of SAR (measured) = 11.8 mW/g

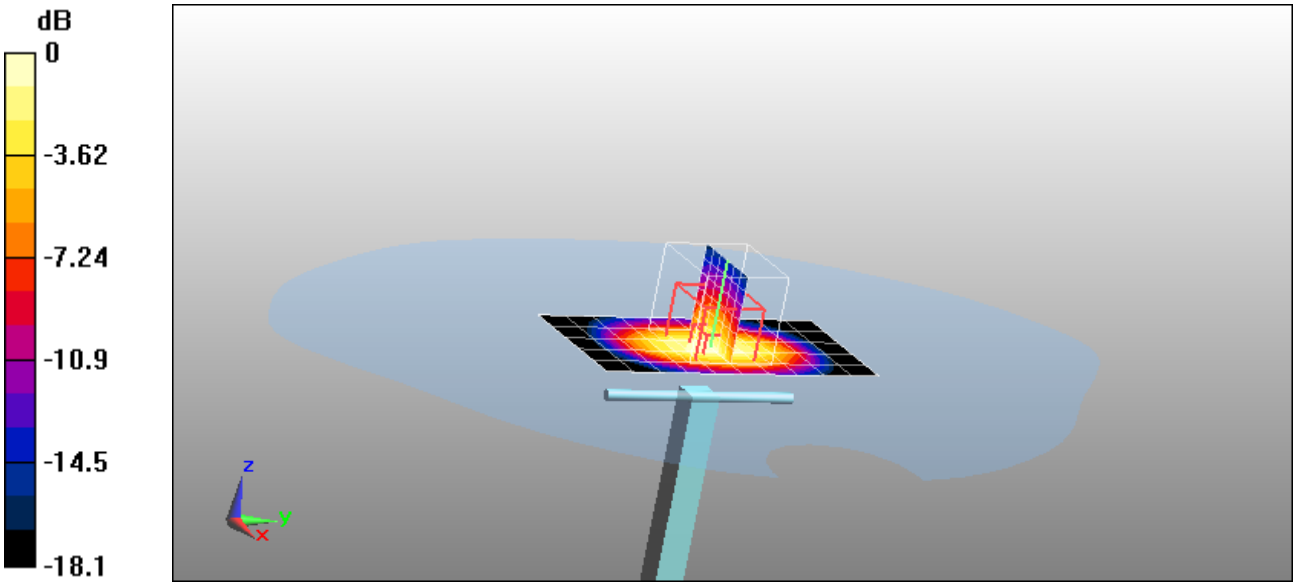

0 dB = 11.8mW/g

Date/Time: 13-Mar-2011

Test Laboratory: QuieTek Lab

System Check Body 1900MHz

DUT: Dipole 1900 MHz D1900V2; Type: D1900V2

Communication System: CW; Communication System Band: D1900 (1900.0 MHz); Duty Cycle: 1:1;

Frequency: 1900 MHz; Medium parameters used: f = 1900 MHz; σ = 1.55 mho/m; εr = 53; ρ = 1000 kg/m3 ;

Phantom section: Flat Section ; Input Power=250mW

Ambient temperature (℃): 21.5, Liquid temperature (℃): 21.0

DASY5 Configuration:

- Probe: EX3DV4 - SN3710; ConvF(4.193, 4.677, 4.833); Calibrated: 2011/2/25
- Sensor-Surface: 4mm (Mechanical Surface Detection)
- Electronics: DAE4 Sn1220; Calibrated: 2010/12/3
- Phantom: SAM2; Type: SAM; Serial: TP1562
- Measurement SW: DASY5, V5.2 Build 162; SEMCAD X Version 14.0 Build 59

Configuration/System Check PCS1900 Body/Area Scan (7x11x1): Measurement grid: dx=10mm, dy=10mm

Maximum value of SAR (measured) = 11.2 mW/g

Configuration/System Check PCS1900 Body/Zoom Scan (7x7x7)/Cube 0: Measurement grid: dx=5mm, dy=5mm, dz=5mm, Reference Value = 84.8 V/m; Power Drift = -0.027 dB

Peak SAR (extrapolated) = 18.5 W/kg

SAR(1 g) = 9.9 mW/g; SAR(10 g) = 5.07 mW/g Maximum value of SAR (measured) = 11.2 mW/g

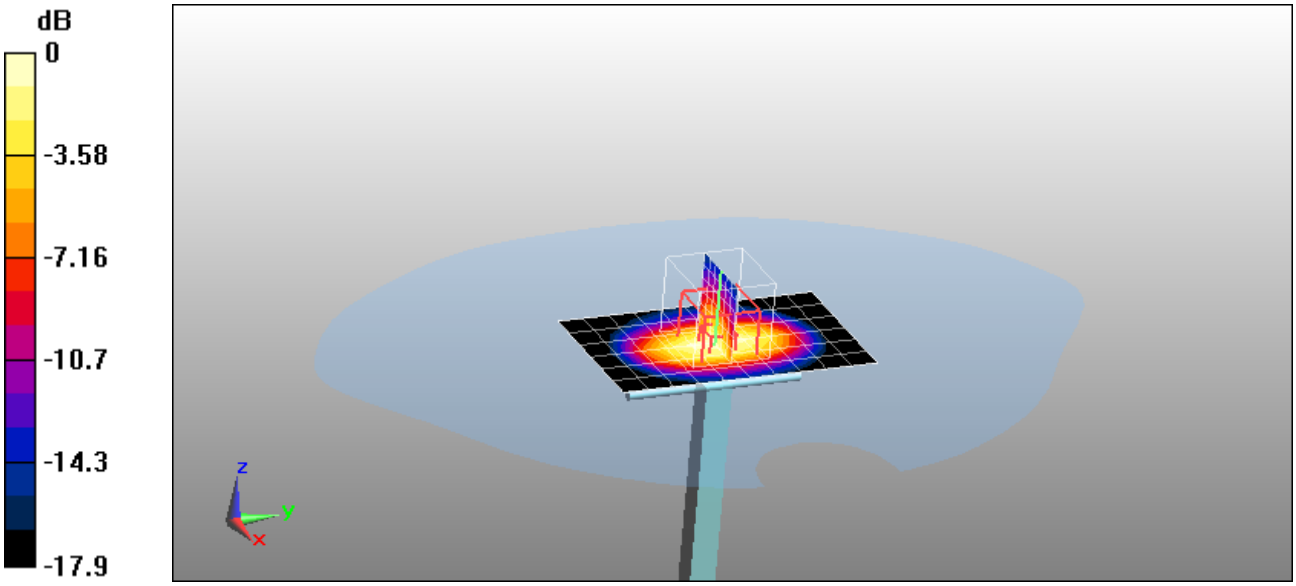

0 dB = 11.2mW/g

Appendix B. SAR measurement Data

Date/Time: 13-Mar-2011

Test Laboratory: QuieTek Lab

GSM850 Low Left-Touch

DUT: Mobile Phone ; Type: PT-7

Communication System: Generic GSM; Communication System Band: GSM 850 (824.0 - 849.0 MHz); Duty Cycle: 1:8.3; Frequency: 824.2 MHz; Medium parameters used: f = 824.2 MHz; σ = 0.9 mho/m; εr = 41.5; ρ = 1000 kg/m3 ; Phantom section: Left Section

Ambient temperature (℃): 21.5, Liquid temperature (℃): 21.0

DASY5 Configuration:

- Probe: EX3DV4 - SN3710; ConvF(3.843, 4.303, 4.435); Calibrated: 2011/2/25
- Sensor-Surface: 4mm (Mechanical Surface Detection)
- Electronics: DAE4 Sn1220; Calibrated: 2010/12/3
- Phantom: SAM1; Type: SAM; Serial: TP1561
- Measurement SW: DASY5, V5.2 Build 162; SEMCAD X Version 14.0 Build 59

Configuration/GSM850 Low Left-Touch/Area Scan (8x14x1): Measurement grid: dx=10mm, dy=10mm

Maximum value of SAR (measured) = 0.441 mW/g

Configuration/GSM850 Low Left-Touch/Zoom Scan (5x5x7)/Cube 0: Measurement grid: dx=8mm, dy=8mm, dz=5mm, Reference Value = 17.2 V/m; Power Drift = -0.050 dB

Peak SAR (extrapolated) = 0.735 W/kg

SAR(1 g) = 0.411 mW/g; SAR(10 g) = 0.281 mW/g Maximum value of SAR (measured) = 0.437 mW/g

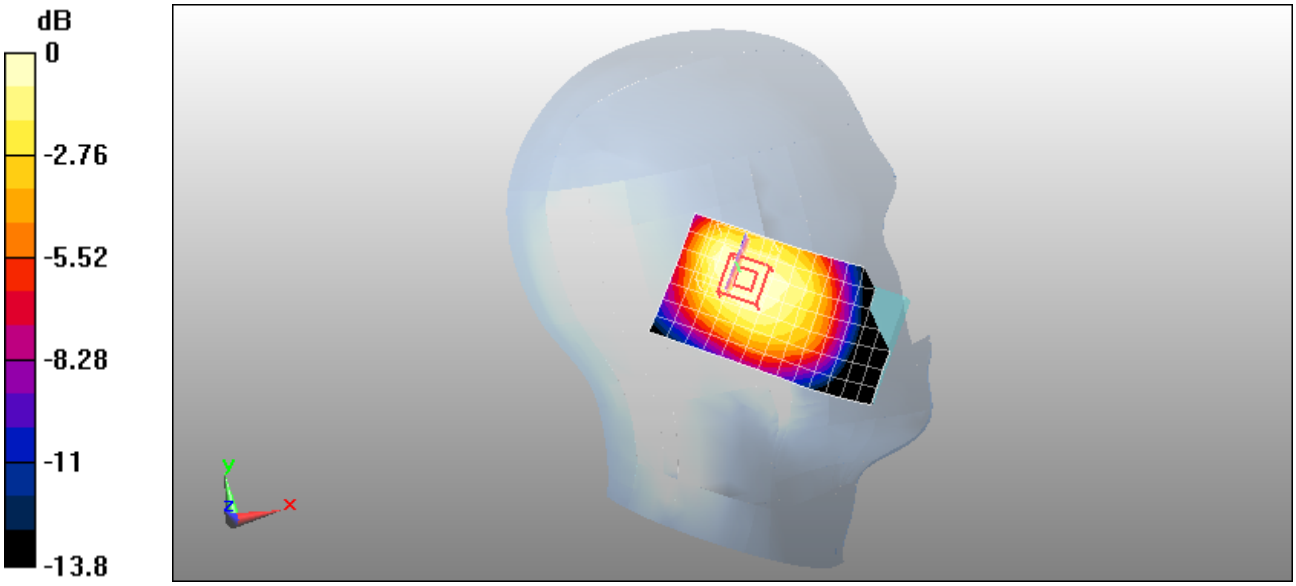

0 dB = 0.437mW/g

Date/Time: 13-Mar-2011

Test Laboratory: QuieTek Lab

GSM850 Mid Left-Touch

DUT: Mobile Phone ; Type: PT-7

Communication System: Generic GSM; Communication System Band: GSM 850 (824.0 - 849.0 MHz); Duty Cycle: 1:8.3; Frequency: 836.6 MHz; Medium parameters used: f = 836.6 MHz; σ = 0.92 mho/m; εr = 41.4; ρ = 1000 kg/m3 ; Phantom section: Left Section

Ambient temperature (℃): 21.5, Liquid temperature (℃): 21.0

DASY5 Configuration:

- Probe: EX3DV4 - SN3710; ConvF(3.843, 4.303, 4.435); Calibrated: 2011/2/25
- Sensor-Surface: 4mm (Mechanical Surface Detection)
- Electronics: DAE4 Sn1220; Calibrated: 2010/12/3
- Phantom: SAM1; Type: SAM; Serial: TP1561
- Measurement SW: DASY5, V5.2 Build 162; SEMCAD X Version 14.0 Build 59

Configuration/GSM850 Mid Left-Touch/Area Scan (8x14x1): Measurement grid: dx=10mm, dy=10mm

Maximum value of SAR (measured) = 0.352 mW/g

Configuration/GSM850 Mid Left-Touch/Zoom Scan (5x5x7)/Cube 0: Measurement grid: dx=8mm, dy=8mm, dz=5mm, Reference Value = 15.2 V/m; Power Drift = -0.132 dB

Peak SAR (extrapolated) = 0.604 W/kg

SAR(1 g) = 0.334 mW/g; SAR(10 g) = 0.230 mW/g Maximum value of SAR (measured) = 0.352 mW/g

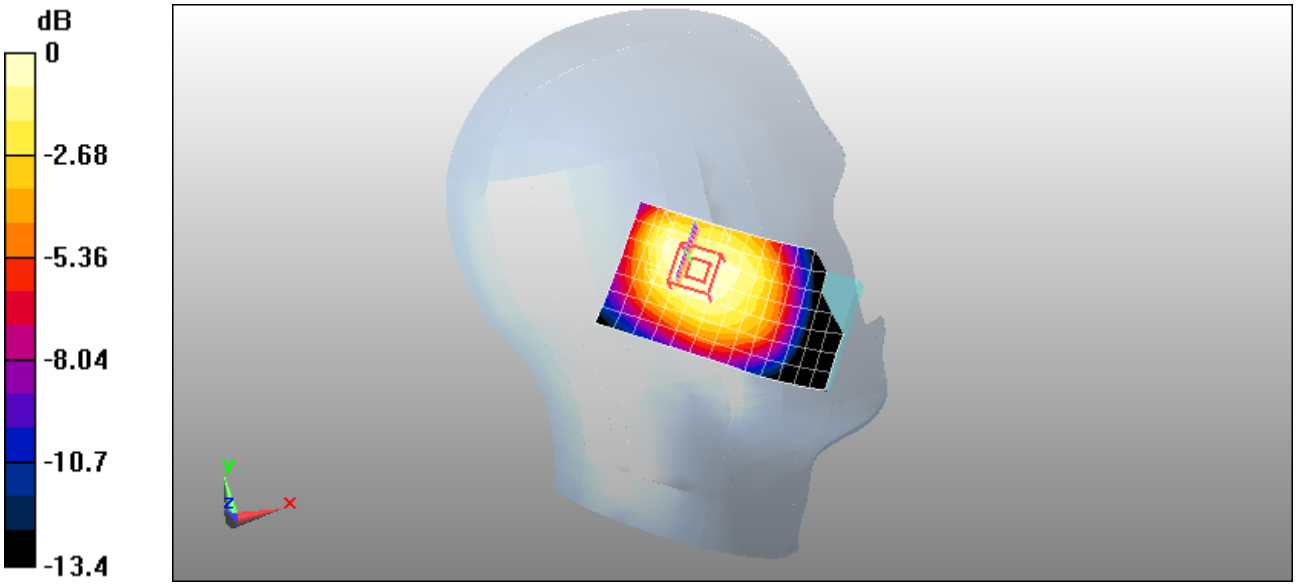

0 dB = 0.352mW/g

Date/Time: 13-Mar-2011

Test Laboratory: QuieTek Lab

GSM850 High Left-Touch

DUT: Mobile Phone ; Type: PT-7

Communication System: Generic GSM; Communication System Band: GSM 850 (824.0 - 849.0 MHz); Duty Cycle: 1:8.3; Frequency: 848.6 MHz; Medium parameters used: f = 848.6 MHz; σ = 0.93 mho/m; εr = 41.2; ρ = 1000 kg/m3 ; Phantom section: Left Section

Ambient temperature (℃): 21.5, Liquid temperature (℃): 21.0

DASY5 Configuration:

- Probe: EX3DV4 - SN3710; ConvF(3.843, 4.303, 4.435); Calibrated: 2011/2/25
- Sensor-Surface: 4mm (Mechanical Surface Detection)
- Electronics: DAE4 Sn1220; Calibrated: 2010/12/3
- Phantom: SAM1; Type: SAM; Serial: TP1561
- Measurement SW: DASY5, V5.2 Build 162; SEMCAD X Version 14.0 Build 59

Configuration/GSM850 High Left-Touch/Area Scan (8x14x1): Measurement grid: dx=10mm, dy=10mm

Maximum value of SAR (measured) = 0.238 mW/g

Configuration/GSM850 High Left-Touch/Zoom Scan (5x5x7)/Cube 0: Measurement grid: dx=8mm, dy=8mm, dz=5mm, Reference Value = 13.8 V/m; Power Drift = -0.025 dB

Peak SAR (extrapolated) = 0.339 W/kg

SAR(1 g) = 0.215 mW/g; SAR(10 g) = 0.150 mW/g Maximum value of SAR (measured) = 0.228 mW/g

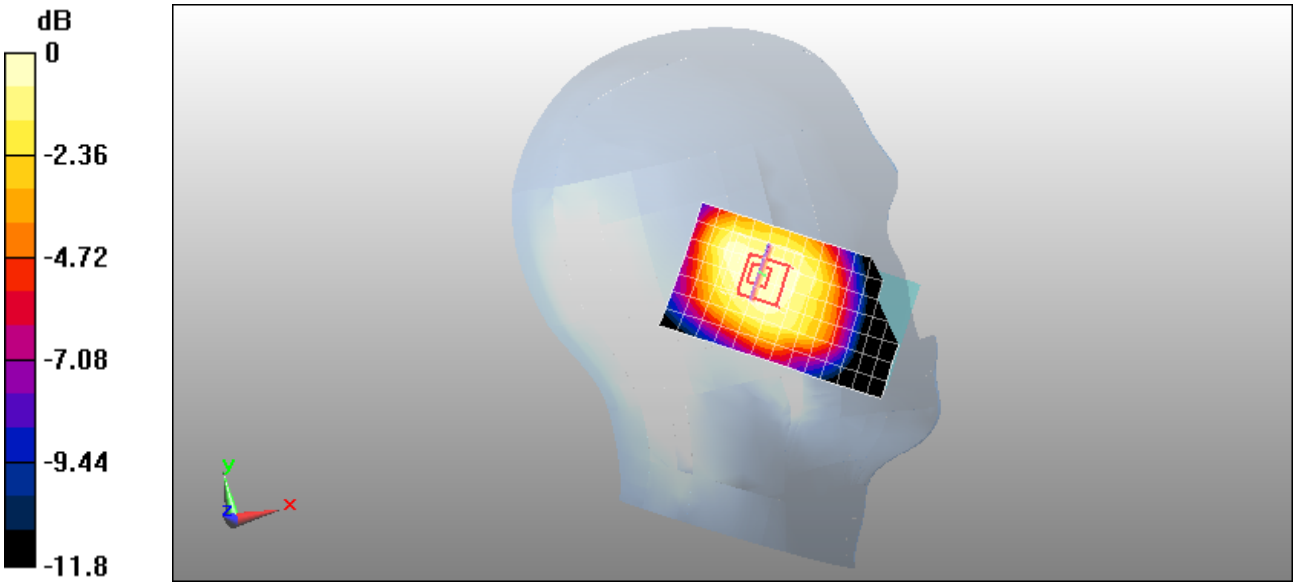

0 dB = 0.228mW/g

Date/Time: 13-Mar-2011

Test Laboratory: QuieTek Lab

GSM850 Mid Left-Tilt

DUT: Mobile Phone ; Type: PT-7

Communication System: Generic GSM; Communication System Band: GSM 850 (824.0 - 849.0 MHz); Duty Cycle: 1:8.3; Frequency: 836.6 MHz; Medium parameters used: f = 836.6 MHz; σ = 0.92 mho/m; εr = 41.4; ρ = 1000 kg/m3 ; Phantom section: Left Section

Ambient temperature (℃): 21.5, Liquid temperature (℃): 21.0

DASY5 Configuration:

- Probe: EX3DV4 - SN3710; ConvF(3.843, 4.303, 4.435); Calibrated: 2011/2/25
- Sensor-Surface: 4mm (Mechanical Surface Detection)
- Electronics: DAE4 Sn1220; Calibrated: 2010/12/3
- Phantom: SAM1; Type: SAM; Serial: TP1561
- Measurement SW: DASY5, V5.2 Build 162; SEMCAD X Version 14.0 Build 59

Configuration/GSM850 Mid Left-Tilt/Area Scan (8x14x1): Measurement grid: dx=10mm, dy=10mm

Maximum value of SAR (measured) = 0.325 mW/g

Configuration/GSM850 Mid Left-Tilt/Zoom Scan (5x5x7)/Cube 0: Measurement grid: dx=8mm, dy=8mm, dz=5mm, Reference Value = 14.9 V/m; Power Drift = 0.113 dB

Peak SAR (extrapolated) = 0.556 W/kg

SAR(1 g) = 0.292 mW/g; SAR(10 g) = 0.181 mW/g Maximum value of SAR (measured) = 0.316 mW/g

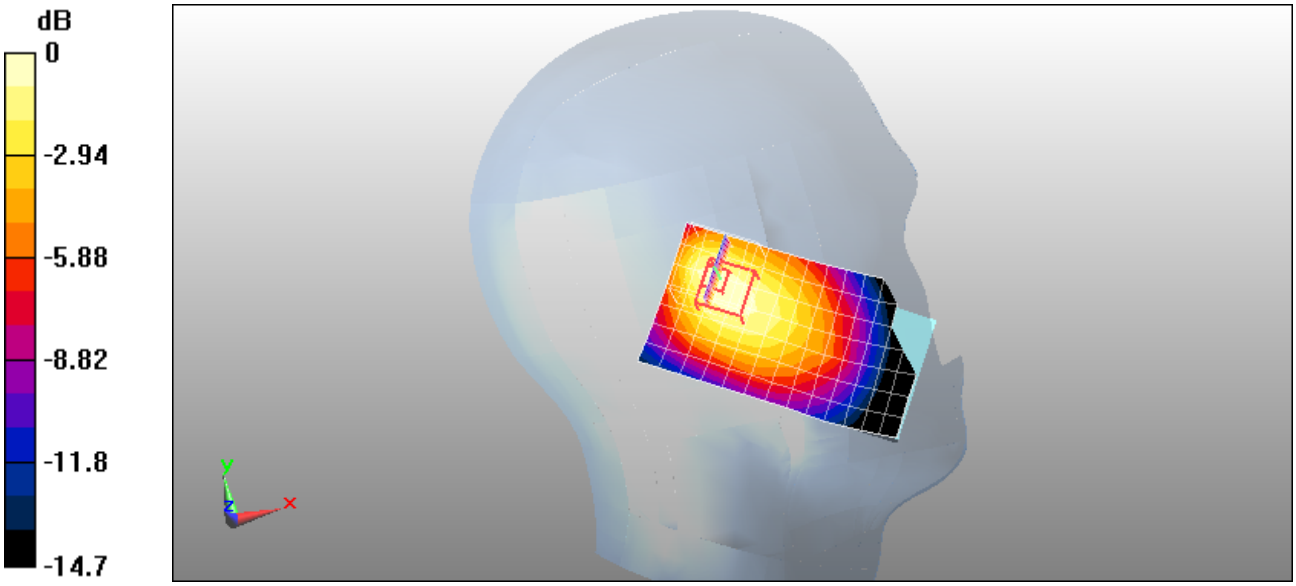

0 dB = 0.316mW/g

Date/Time: 13-Mar-2011

Test Laboratory: QuieTek Lab

GSM850 Low Right-Touch

DUT: Mobile Phone ; Type: PT-7

Communication System: Generic GSM; Communication System Band: GSM 850 (824.0 - 849.0 MHz); Duty Cycle: 1:8.3; Frequency: 824.2 MHz; Medium parameters used: f = 824.2 MHz; σ = 0.9 mho/m; εr = 41.5; ρ = 1000 kg/m3 ; Phantom section: Right Section

Ambient temperature (℃): 21.5, Liquid temperature (℃): 21.0

DASY5 Configuration:

- Probe: EX3DV4 - SN3710; ConvF(3.843, 4.303, 4.435); Calibrated: 2011/2/25
- Sensor-Surface: 4mm (Mechanical Surface Detection)
- Electronics: DAE4 Sn1220; Calibrated: 2010/12/3
- Phantom: SAM2; Type: SAM; Serial: TP1562
- Measurement SW: DASY5, V5.2 Build 162; SEMCAD X Version 14.0 Build 59

Configuration/GSM850 Low Right-Touch/Area Scan (8x14x1): Measurement grid: dx=10mm, dy=10mm

Maximum value of SAR (measured) = 0.433 mW/g

Configuration/GSM850 Low Right-Touch/Zoom Scan (5x5x7)/Cube 0: Measurement grid: dx=8mm, dy=8mm, dz=5mm, Reference Value = 18.1 V/m; Power Drift = -0.023 dB

Peak SAR (extrapolated) = 0.547 W/kg

SAR(1 g) = 0.414 mW/g; SAR(10 g) = 0.289 mW/g Maximum value of SAR (measured) = 0.429 mW/g

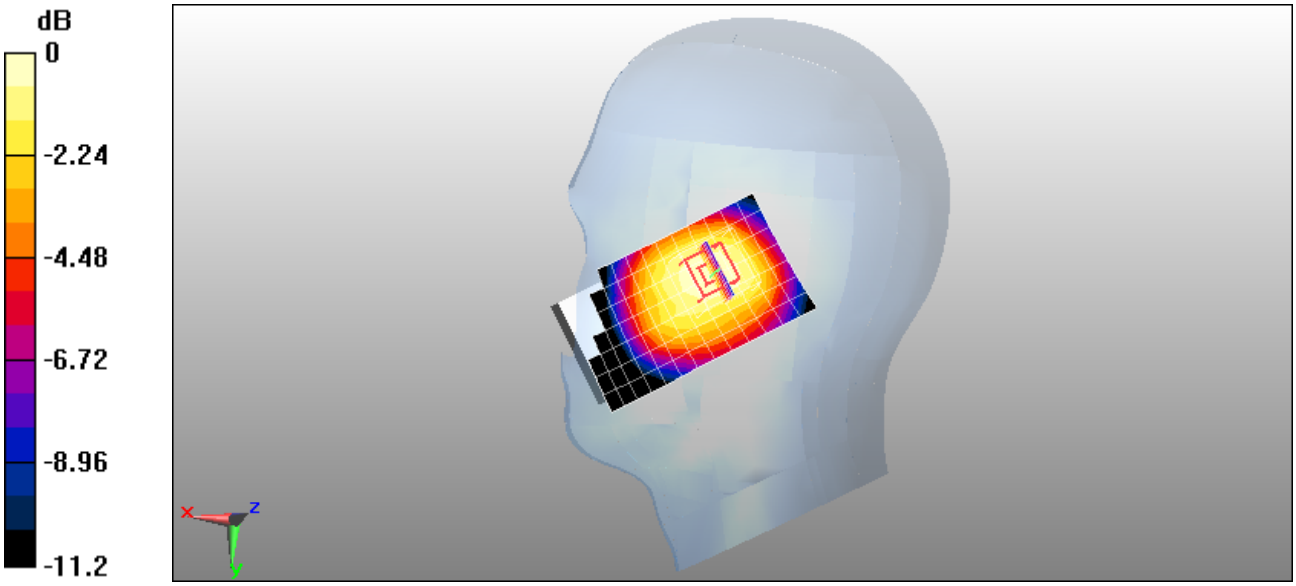

0 dB = 0.429mW/g

Date/Time: 13-Mar-2011

Test Laboratory: QuieTek Lab

GSM850 Mid Right-Touch

DUT: Mobile Phone ; Type: PT-7

Communication System: Generic GSM; Communication System Band: GSM 850 (824.0 - 849.0 MHz); Duty Cycle: 1:8.3; Frequency: 836.6 MHz; Medium parameters used: f = 836.6 MHz; σ = 0.92 mho/m; εr = 41.4; ρ = 1000 kg/m3 ; Phantom section: Right Section

Ambient temperature (℃): 21.5, Liquid temperature (℃): 21.0

DASY5 Configuration:

- Probe: EX3DV4 - SN3710; ConvF(3.843, 4.303, 4.435); Calibrated: 2011/2/25
- Sensor-Surface: 4mm (Mechanical Surface Detection)
- Electronics: DAE4 Sn1220; Calibrated: 2010/12/3
- Phantom: SAM2; Type: SAM; Serial: TP1562
- Measurement SW: DASY5, V5.2 Build 162; SEMCAD X Version 14.0 Build 59

Configuration/GSM850 Mid Right-Touch/Area Scan (8x14x1): Measurement grid: dx=10mm, dy=10mm

Maximum value of SAR (measured) = 0.365 mW/g

Configuration/GSM850 Mid Right-Touch/Zoom Scan (5x5x7)/Cube 0: Measurement grid: dx=8mm, dy=8mm, dz=5mm, Reference Value = 16.4 V/m; Power Drift = -0.008 dB

Peak SAR (extrapolated) = 0.464 W/kg

SAR(1 g) = 0.341 mW/g; SAR(10 g) = 0.241 mW/g Maximum value of SAR (measured) = 0.361 mW/g

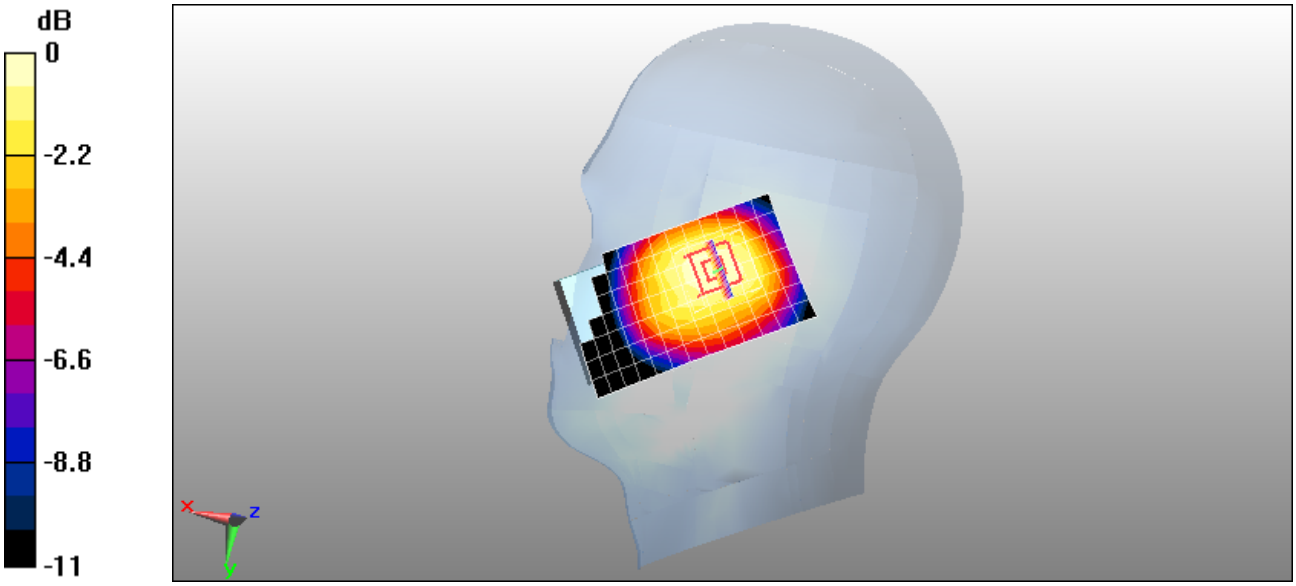

0 dB = 0.361mW/g

Date/Time: 13-Mar-2011

Test Laboratory: QuieTek Lab

GSM850 High Right-Touch

DUT: Mobile Phone ; Type: PT-7

Communication System: Generic GSM; Communication System Band: GSM 850 (824.0 - 849.0 MHz); Duty Cycle: 1:8.3; Frequency: 848.6 MHz; Medium parameters used: f = 848.6 MHz; σ = 0.93 mho/m; εr = 41.2; ρ = 1000 kg/m3 ; Phantom section: Right Section

Ambient temperature (℃): 21.5, Liquid temperature (℃): 21.0

DASY5 Configuration:

- Probe: EX3DV4 - SN3710; ConvF(3.843, 4.303, 4.435); Calibrated: 2011/2/25
- Sensor-Surface: 4mm (Mechanical Surface Detection)
- Electronics: DAE4 Sn1220; Calibrated: 2010/12/3
- Phantom: SAM2; Type: SAM; Serial: TP1562
- Measurement SW: DASY5, V5.2 Build 162; SEMCAD X Version 14.0 Build 59

Configuration/GSM850 High Right-Touch/Area Scan (8x14x1): Measurement grid: dx=10mm, dy=10mm

Maximum value of SAR (measured) = 0.302 mW/g

Configuration/GSM850 High Right-Touch/Zoom Scan (5x5x7)/Cube 0: Measurement grid: dx=8mm, dy=8mm, dz=5mm, Reference Value = 14.6 V/m; Power Drift = 0.015 dB

Peak SAR (extrapolated) = 0.388 W/kg

SAR(1 g) = 0.287 mW/g; SAR(10 g) = 0.202 mW/g Maximum value of SAR (measured) = 0.305 mW/g

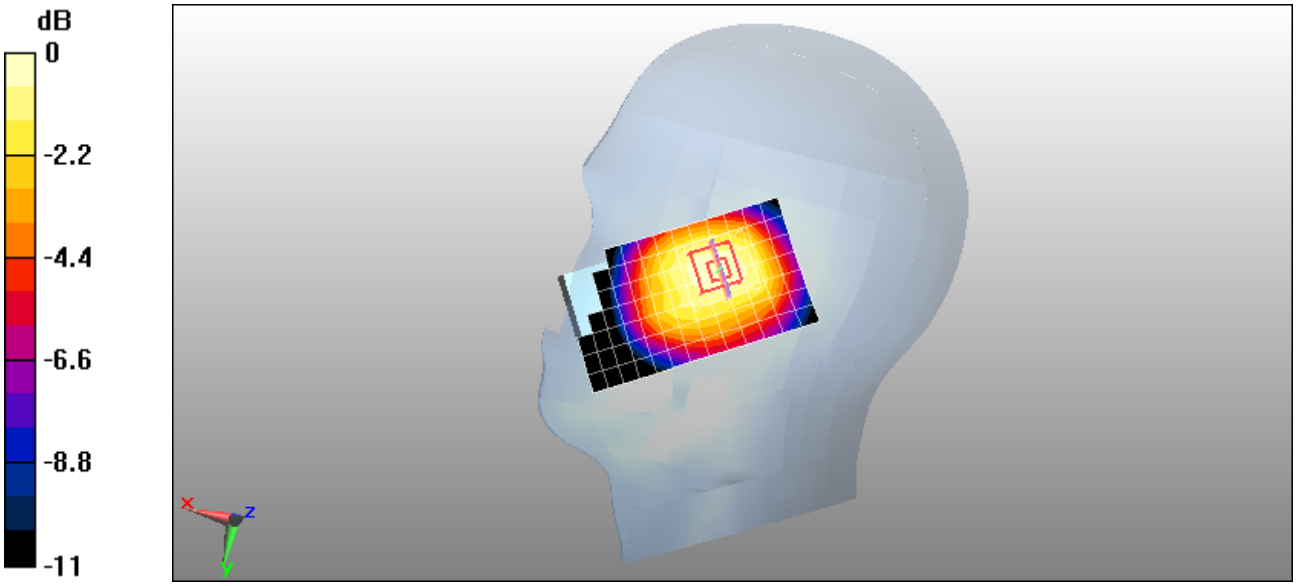

0 dB = 0.305mW/g

Date/Time: 13-Mar-2011

Test Laboratory: QuieTek Lab

GSM850 Mid Right-Tilt

DUT: Mobile Phone ; Type: PT-7

Communication System: Generic GSM; Communication System Band: GSM 850 (824.0 - 849.0 MHz); Duty Cycle: 1:8.3; Frequency: 836.6 MHz; Medium parameters used: f = 836.6 MHz; σ = 0.92 mho/m; εr = 41.4; ρ = 1000 kg/m3 ; Phantom section: Right Section

Ambient temperature (℃): 21.5, Liquid temperature (℃): 21.0

DASY5 Configuration:

- Probe: EX3DV4 - SN3710; ConvF(3.843, 4.303, 4.435); Calibrated: 2011/2/25
- Sensor-Surface: 4mm (Mechanical Surface Detection)
- Electronics: DAE4 Sn1220; Calibrated: 2010/12/3
- Phantom: SAM2; Type: SAM; Serial: TP1562
- Measurement SW: DASY5, V5.2 Build 162; SEMCAD X Version 14.0 Build 59

Configuration/GSM850 Mid Right-Tilt/Area Scan (8x14x1): Measurement grid: dx=10mm, dy=10mm

Maximum value of SAR (measured) = 0.252 mW/g

Configuration/GSM850 Mid Right-Tilt/Zoom Scan (5x5x7)/Cube 0: Measurement grid: dx=8mm, dy=8mm, dz=5mm, Reference Value = 15.4 V/m; Power Drift = -0.065 dB

Peak SAR (extrapolated) = 0.357 W/kg

SAR(1 g) = 0.240 mW/g; SAR(10 g) = 0.164 mW/g Maximum value of SAR (measured) = 0.256 mW/g

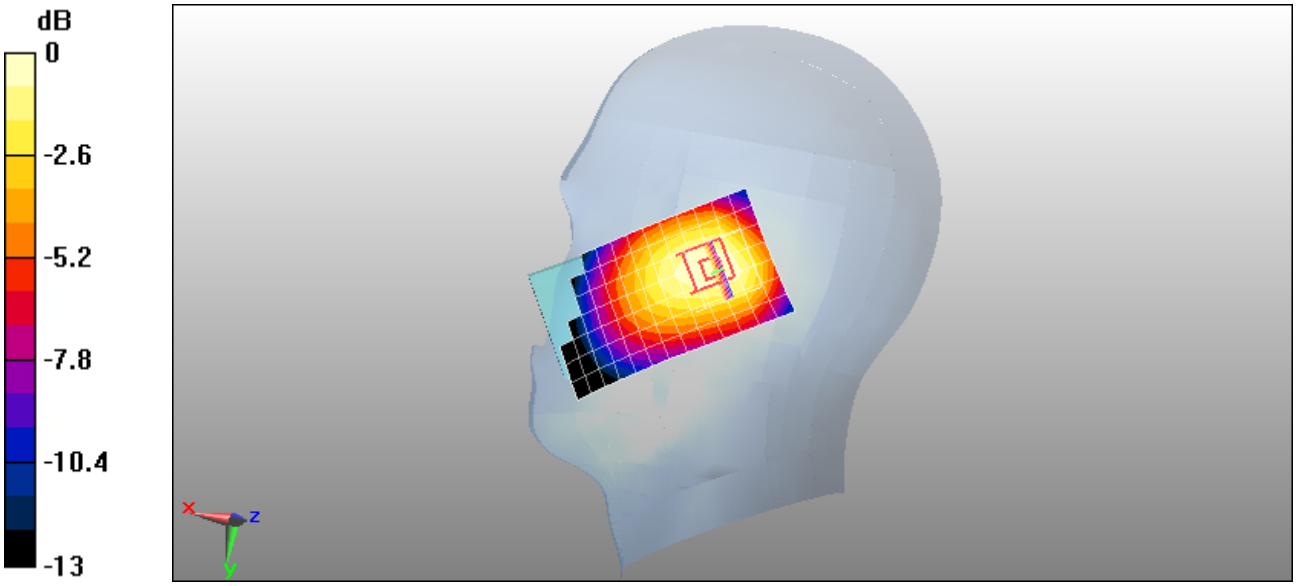

0 dB = 0.256mW/g

Date/Time: 13-Mar-2011

Test Laboratory: QuieTek Lab

GSM 850 Low Body-Back

DUT: Mobile Phone ; Type: PT-7

Communication System: Generic GSM; Communication System Band: GSM 850 (824.0 - 849.0 MHz); Duty Cycle: 1:8.3; Frequency: 824.2 MHz; Medium parameters used: f = 824.2 MHz; σ = 0.98 mho/m; εr = 54.4; ρ = 1000 kg/m3 ; Phantom section: Flat Section

Ambient temperature (℃): 21.5, Liquid temperature (℃): 21.0

DASY5 Configuration:

- Probe: EX3DV4 - SN3710; ConvF(4.438, 4.985, 5.123); Calibrated: 2011/2/25
- Sensor-Surface: 4mm (Mechanical Surface Detection)
- Electronics: DAE4 Sn1220; Calibrated: 2010/12/3
- Phantom: SAM1; Type: SAM; Serial: TP1561
- Measurement SW: DASY5, V5.2 Build 162; SEMCAD X Version 14.0 Build 59

Configuration/GSM 850 Low Body-Back/Area Scan (9x15x1): Measurement grid: dx=10mm, dy=10mm

Maximum value of SAR (measured) = 0.254 mW/g

Configuration/GSM 850 Low Body-Back/Zoom Scan (5x5x7)/Cube 0: Measurement grid: dx=8mm, dy=8mm, dz=5mm, Reference Value = 11.4 V/m; Power Drift = 0.096 dB

Peak SAR (extrapolated) = 0.364 W/kg

SAR(1 g) = 0.241 mW/g; SAR(10 g) = 0.166 mW/g Maximum value of SAR (measured) = 0.253 mW/g

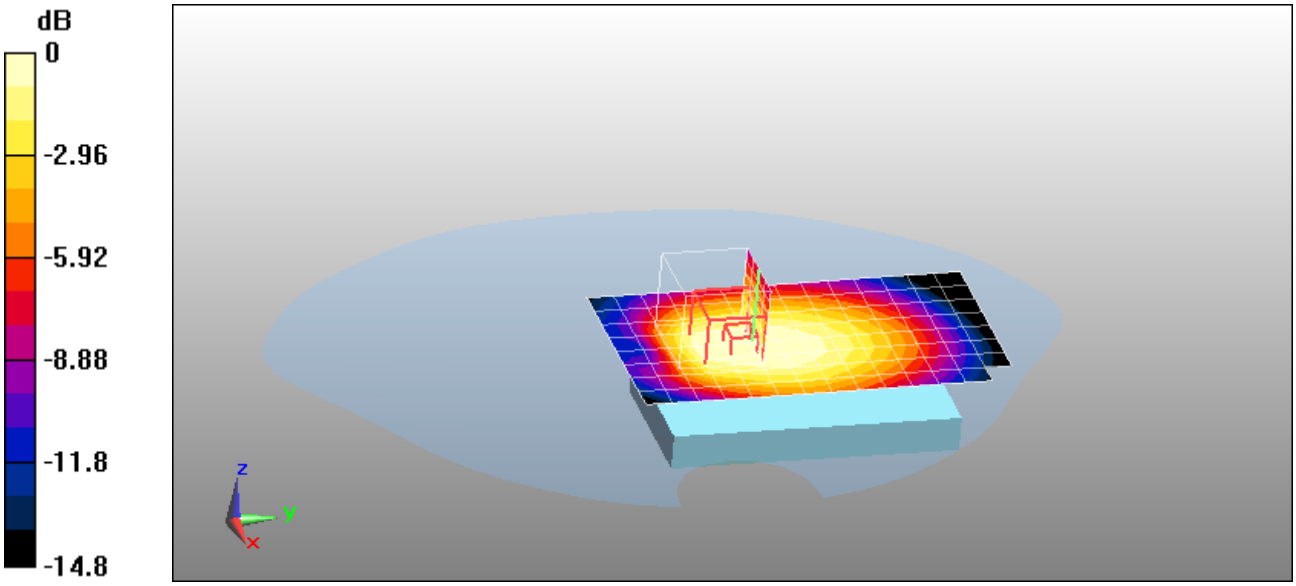

0 dB = 0.253mW/g

Date/Time: 13-Mar-2011

Test Laboratory: QuieTek Lab

GSM 850 Mid Body-Back

DUT: Mobile Phone ; Type: PT-7

Communication System: Generic GSM; Communication System Band: GSM 850 (824.0 - 849.0 MHz); Duty Cycle: 1:8.3; Frequency: 836.6 MHz; Medium parameters used: f = 836.6 MHz; σ = 0.99 mho/m; εr = 54.2; ρ = 1000 kg/m3 ; Phantom section: Flat Section

Ambient temperature (℃): 21.5, Liquid temperature (℃): 21.0

DASY5 Configuration:

- Probe: EX3DV4 - SN3710; ConvF(4.438, 4.985, 5.123); Calibrated: 2011/2/25
- Sensor-Surface: 4mm (Mechanical Surface Detection)
- Electronics: DAE4 Sn1220; Calibrated: 2010/12/3
- Phantom: SAM1; Type: SAM; Serial: TP1561
- Measurement SW: DASY5, V5.2 Build 162; SEMCAD X Version 14.0 Build 59

Configuration/GSM 850 Mid Body-Back/Area Scan (9x15x1): Measurement grid: dx=10mm, dy=10mm

Maximum value of SAR (measured) = 0.173 mW/g

Configuration/GSM 850 Mid Body-Back/Zoom Scan (5x5x7)/Cube 0: Measurement grid: dx=8mm, dy=8mm, dz=5mm, Reference Value = 8.68 V/m; Power Drift = -0.023 dB

Peak SAR (extrapolated) = 0.216 W/kg

SAR(1 g) = 0.165 mW/g; SAR(10 g) = 0.120 mW/g Maximum value of SAR (measured) = 0.174 mW/g

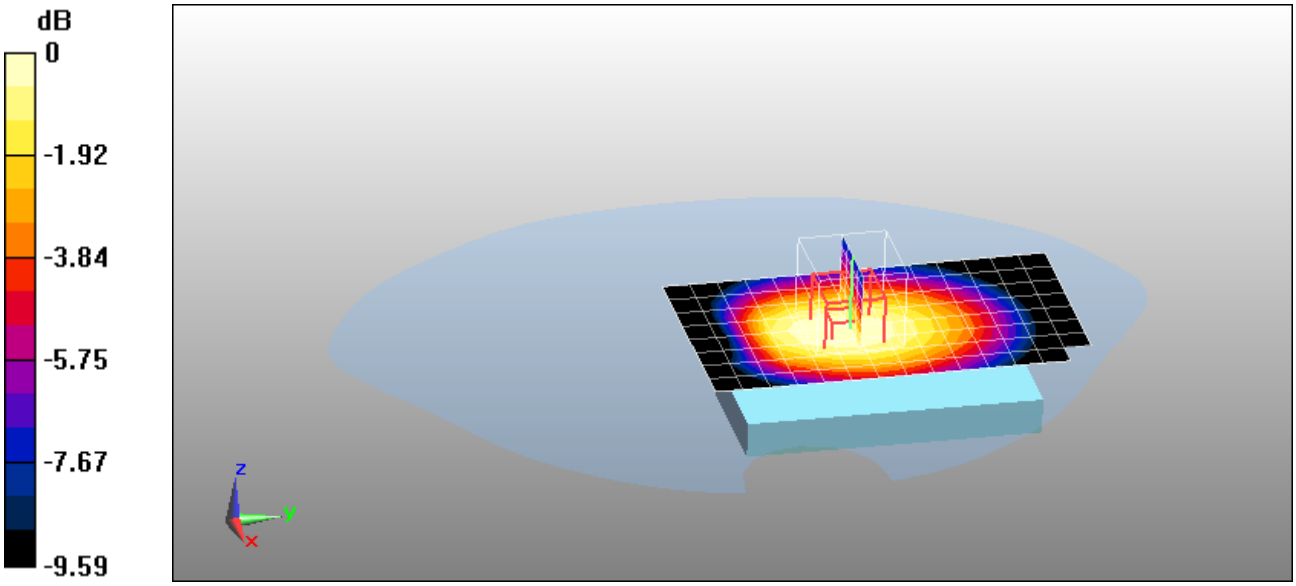

0 dB = 0.174mW/g

Date/Time: 13-Mar-2011

Test Laboratory: QuieTek Lab

GSM 850 High Body-Back

DUT: Mobile Phone ; Type: PT-7

Communication System: Generic GSM; Communication System Band: GSM 850 (824.0 - 849.0 MHz); Duty Cycle: 1:8.3; Frequency: 848.6 MHz; Medium parameters used: f = 848.6 MHz; σ = 1 mho/m; εr = 54.1; ρ = 1000 kg/m3 ; Phantom section: Flat Section

Ambient temperature (℃): 21.5, Liquid temperature (℃): 21.0

DASY5 Configuration:

- Probe: EX3DV4 - SN3710; ConvF(4.438, 4.985, 5.123); Calibrated: 2011/2/25
- Sensor-Surface: 4mm (Mechanical Surface Detection)
- Electronics: DAE4 Sn1220; Calibrated: 2010/12/3
- Phantom: SAM1; Type: SAM; Serial: TP1561
- Measurement SW: DASY5, V5.2 Build 162; SEMCAD X Version 14.0 Build 59

Configuration/GSM 850 High Body-Back/Area Scan (9x15x1): Measurement grid: dx=10mm, dy=10mm

Maximum value of SAR (measured) = 0.199 mW/g

Configuration/GSM 850 High Body-Back/Zoom Scan (5x5x7)/Cube 0: Measurement grid: dx=8mm, dy=8mm, dz=5mm, Reference Value = 9.14 V/m; Power Drift = -0.077 dB

Peak SAR (extrapolated) = 0.245 W/kg

SAR(1 g) = 0.187 mW/g; SAR(10 g) = 0.136 mW/g Maximum value of SAR (measured) = 0.198 mW/g

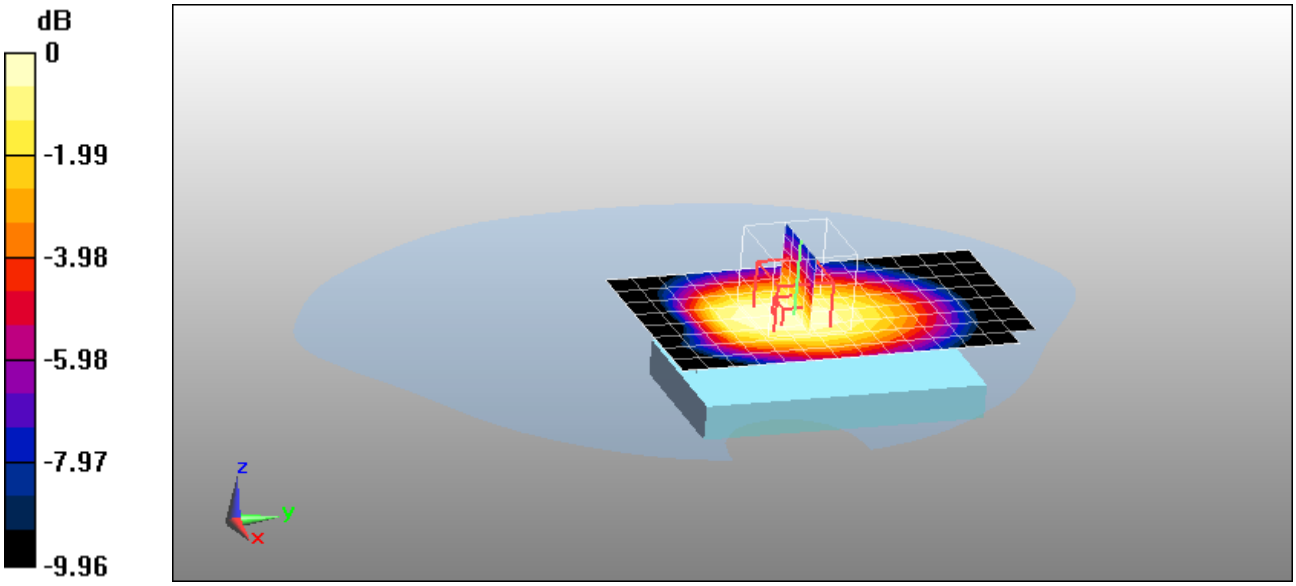

0 dB = 0.198mW/g

Date/Time: 13-Mar-2011

Test Laboratory: QuieTek Lab

GSM 850 Mid Body-Front

DUT: Mobile Phone ; Type: PT-7

Communication System: Generic GSM; Communication System Band: GSM 850 (824.0 - 849.0 MHz); Duty Cycle: 1:8.3; Frequency: 836.6 MHz; Medium parameters used: f = 836.6 MHz; σ = 0.99 mho/m; εr = 54.2; ρ = 1000 kg/m3 ; Phantom section: Flat Section

Ambient temperature (℃): 21.5, Liquid temperature (℃): 21.0

DASY5 Configuration:

- Probe: EX3DV4 - SN3710; ConvF(4.438, 4.985, 5.123); Calibrated: 2011/2/25
- Sensor-Surface: 4mm (Mechanical Surface Detection)
- Electronics: DAE4 Sn1220; Calibrated: 2010/12/3
- Phantom: SAM1; Type: SAM; Serial: TP1561
- Measurement SW: DASY5, V5.2 Build 162; SEMCAD X Version 14.0 Build 59

Configuration/GSM 850 Mid Body-Front/Area Scan (9x15x1): Measurement grid: dx=10mm, dy=10mm

Maximum value of SAR (measured) = 0.145 mW/g

Configuration/GSM 850 Mid Body-Front/Zoom Scan (5x5x7)/Cube 0: Measurement grid: dx=8mm, dy=8mm, dz=5mm, Reference Value = 8.99 V/m; Power Drift = 0.102 dB

Peak SAR (extrapolated) = 0.210 W/kg

SAR(1 g) = 0.133 mW/g; SAR(10 g) = 0.086 mW/g Maximum value of SAR (measured) = 0.144 mW/g

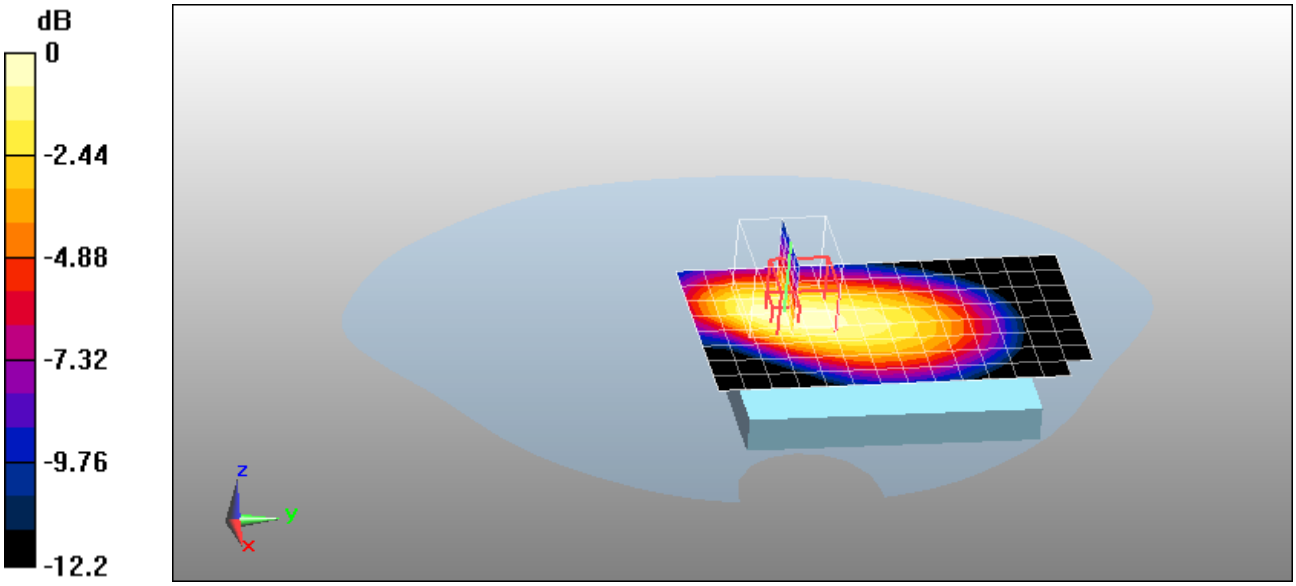

0 dB = 0.144mW/g

Date/Time: 13-Mar-2011

Test Laboratory: QuieTek Lab

GPRS 850 Mid Body-Back(2up)

DUT: Mobile Phone ; Type: PT-7

Communication System: GPRS/EGPRS-2 Slot; Communication System Band: GSM 850; Duty Cycle: 1:4.1; Frequency: 836.6 MHz; Medium parameters used: f = 836.6 MHz; σ = 0.99 mho/m; εr = 54.2; ρ = 1000 kg/m3 ; Phantom section: Flat Section

Ambient temperature (℃): 21.5, Liquid temperature (℃): 21.0

DASY5 Configuration:

- Probe: EX3DV4 - SN3710; ConvF(4.438, 4.985, 5.123); Calibrated: 2011/2/25
- Sensor-Surface: 4mm (Mechanical Surface Detection)
- Electronics: DAE4 Sn1220; Calibrated: 2010/12/3
- Phantom: SAM1; Type: SAM; Serial: TP1561
- Measurement SW: DASY5, V5.2 Build 162; SEMCAD X Version 14.0 Build 59

Configuration/GPRS 850 Mid Body-Back/Area Scan (9x15x1): Measurement grid: dx=10mm, dy=10mm

Maximum value of SAR (measured) = 0.448 mW/g

Configuration/GPRS 850 Mid Body-Back/Zoom Scan (5x5x7)/Cube 0: Measurement grid: dx=8mm, dy=8mm, dz=5mm, Reference Value = 13.4 V/m; Power Drift = 0.054 dB

Peak SAR (extrapolated) = 0.574 W/kg

SAR(1 g) = 0.431 mW/g; SAR(10 g) = 0.311 mW/g Maximum value of SAR (measured) = 0.455 mW/g

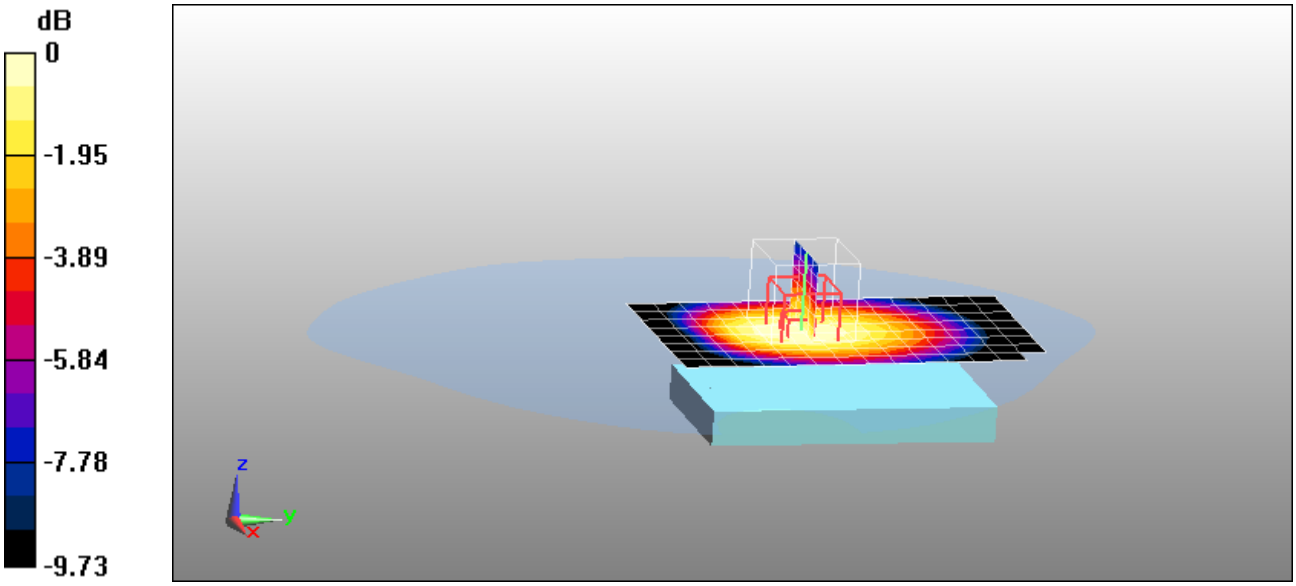

0 dB = 0.455mW/g

Date/Time: 13-Mar-2011

Test Laboratory: QuieTek Lab

GPRS 850 Low Body-Back(3up)

DUT: Mobile Phone ; Type: PT-7

Communication System: GPRS/EGPRS-3 Slot; Communication System Band: GSM 850; Duty Cycle: 1:2.0; Frequency: 824.2 MHz; Medium parameters used: f = 824.2 MHz; σ = 0.98 mho/m; εr = 54.4; ρ = 1000 kg/m3 ; Phantom section: Flat Section

Ambient temperature (℃): 21.5, Liquid temperature (℃): 21.0

DASY5 Configuration:

- Probe: EX3DV4 - SN3710; ConvF(4.438, 4.985, 5.123); Calibrated: 2011/2/25
- Sensor-Surface: 4mm (Mechanical Surface Detection)
- Electronics: DAE4 Sn1220; Calibrated: 2010/12/3
- Phantom: SAM1; Type: SAM; Serial: TP1561
- Measurement SW: DASY5, V5.2 Build 162; SEMCAD X Version 14.0 Build 59

Configuration/GPRS 850 Low Body-Back/Area Scan (9x15x1): Measurement grid: dx=10mm, dy=10mm

Maximum value of SAR (measured) = 0.565 mW/g

Configuration/GPRS 850 Low Body-Back/Zoom Scan (5x5x7)/Cube 0: Measurement grid: dx=8mm, dy=8mm, dz=5mm, Reference Value = 15.5 V/m; Power Drift = 0.031 dB

Peak SAR (extrapolated) = 0.702 W/kg

SAR(1 g) = 0.536 mW/g; SAR(10 g) = 0.390 mW/g Maximum value of SAR (measured) = 0.563 mW/g

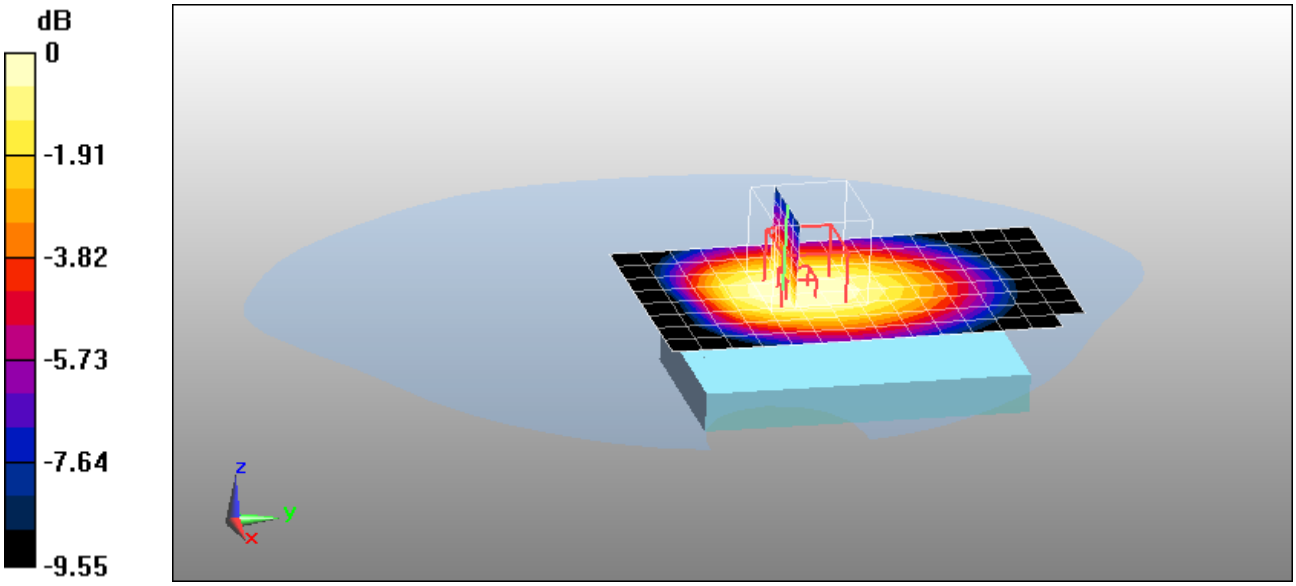

0 dB = 0.563mW/g

Z-Axis Plot

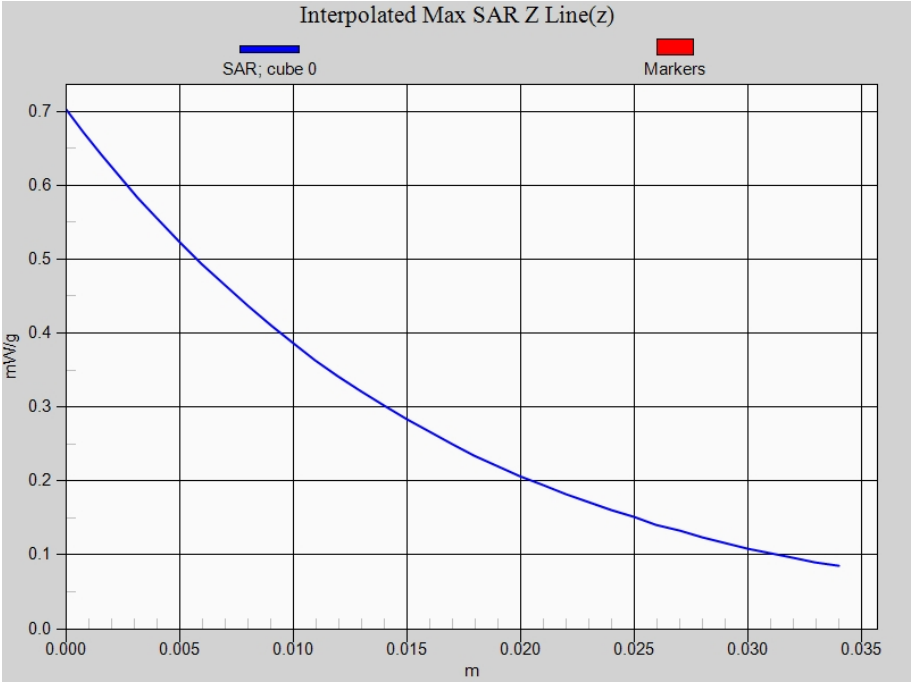
Interpolated Max SAR Z Line(z)
SAR; cube 0
Markers
mW/g
0.7
0.6
0.5
0.4
0.3
0.2
0.1
0.0
0.000
0.005
0.010
0.015
0.020
0.025
0.030
0.035
m

Date/Time: 13-Mar-2011

Test Laboratory: QuieTek Lab

GPRS 850 Mid Body-Back(3up)

DUT: Mobile Phone ; Type: PT-7

Communication System: GPRS/EGPRS-3 Slot; Communication System Band: GSM 850; Duty Cycle: 1:2.0; Frequency: 836.6 MHz; Medium parameters used: f = 836.6 MHz; σ = 0.99 mho/m; εr = 54.2; ρ = 1000 kg/m3 ; Phantom section: Flat Section

Ambient temperature (℃): 21.5, Liquid temperature (℃): 21.0

DASY5 Configuration:

- Probe: EX3DV4 - SN3710; ConvF(4.438, 4.985, 5.123); Calibrated: 2011/2/25
- Sensor-Surface: 4mm (Mechanical Surface Detection)
- Electronics: DAE4 Sn1220; Calibrated: 2010/12/3
- Phantom: SAM1; Type: SAM; Serial: TP1561
- Measurement SW: DASY5, V5.2 Build 162; SEMCAD X Version 14.0 Build 59

Configuration/GPRS 850 Mid Body-Back/Area Scan (9x15x1): Measurement grid: dx=10mm, dy=10mm

Maximum value of SAR (measured) = 0.475 mW/g

Configuration/GPRS 850 Mid Body-Back/Zoom Scan (5x5x7)/Cube 0: Measurement grid: dx=8mm, dy=8mm, dz=5mm, Reference Value = 13.9 V/m; Power Drift = -0.006 dB

Peak SAR (extrapolated) = 0.584 W/kg

SAR(1 g) = 0.446 mW/g; SAR(10 g) = 0.324 mW/g Maximum value of SAR (measured) = 0.469 mW/g

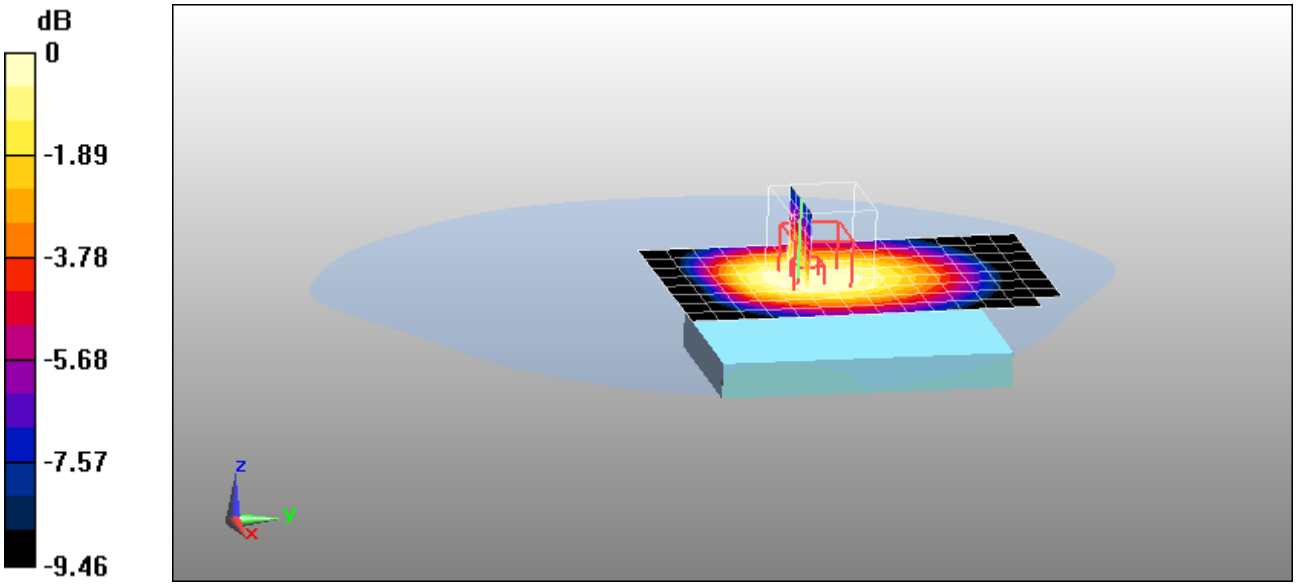

0 dB = 0.469mW/g

Date/Time: 13-Mar-2011

Test Laboratory: QuieTek Lab

GPRS 850 High Body-Back(3up)

DUT: Mobile Phone ; Type: PT-7

Communication System: GPRS/EGPRS-3 Slot; Communication System Band: GSM 850; Duty Cycle: 1:2.0; Frequency: 848.6 MHz; Medium parameters used: f = 848.6 MHz; σ = 1 mho/m; εr = 54.1; ρ = 1000 kg/m3 ; Phantom section: Flat Section

Ambient temperature (℃): 21.5, Liquid temperature (℃): 21.0

DASY5 Configuration:

- Probe: EX3DV4 - SN3710; ConvF(4.438, 4.985, 5.123); Calibrated: 2011/2/25
- Sensor-Surface: 4mm (Mechanical Surface Detection)
- Electronics: DAE4 Sn1220; Calibrated: 2010/12/3
- Phantom: SAM1; Type: SAM; Serial: TP1561
- Measurement SW: DASY5, V5.2 Build 162; SEMCAD X Version 14.0 Build 59

Configuration/GPRS 850 High Body-Back/Area Scan (9x15x1): Measurement grid: dx=10mm, dy=10mm

Maximum value of SAR (measured) = 0.390 mW/g

Configuration/GPRS 850 High Body-Back/Zoom Scan (5x5x7)/Cube 0: Measurement grid: dx=8mm, dy=8mm, dz=5mm, Reference Value = 12.3 V/m; Power Drift = -0.016 dB

Peak SAR (extrapolated) = 0.483 W/kg

SAR(1 g) = 0.370 mW/g; SAR(10 g) = 0.268 mW/g Maximum value of SAR (measured) = 0.390 mW/g

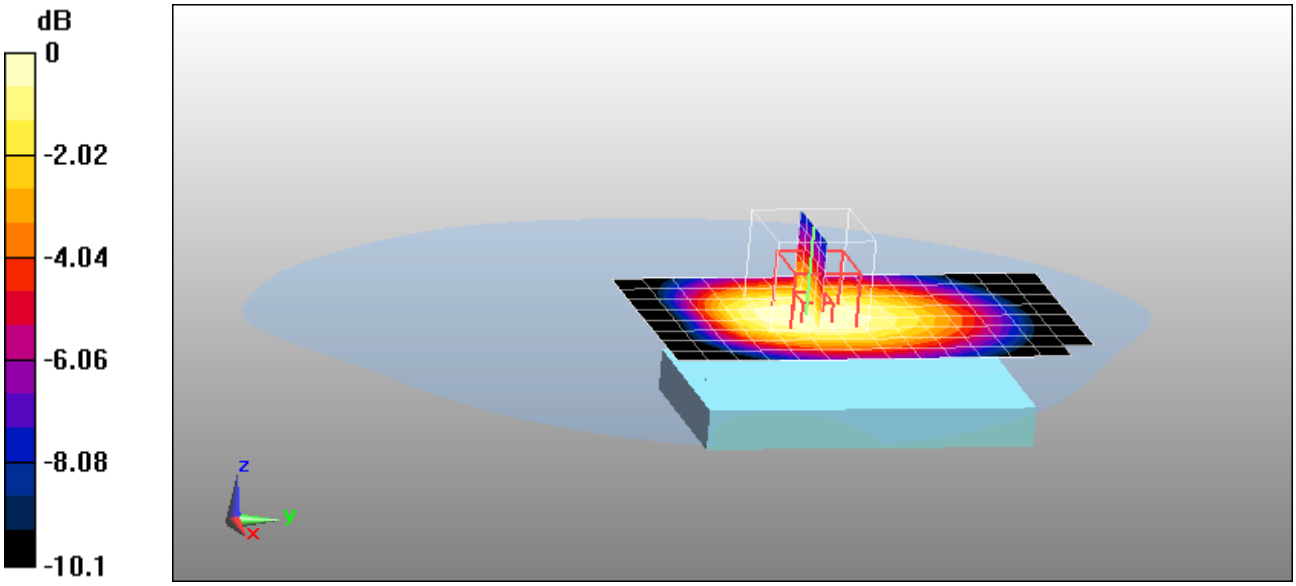

0 dB = 0.390mW/g

Date/Time: 13-Mar-2011

Test Laboratory: QuieTek Lab

GPRS 850 Mid Body-Front(3up)

DUT: Mobile Phone ; Type: PT-7

Communication System: GPRS/EGPRS-3 Slot; Communication System Band: GSM 850; Duty Cycle: 1:2.0; Frequency: 836.6 MHz; Medium parameters used: f = 836.6 MHz; σ = 0.99 mho/m; εr = 54.2; ρ = 1000 kg/m3 ; Phantom section: Flat Section

Ambient temperature (℃): 21.5, Liquid temperature (℃): 21.0

DASY5 Configuration:

- Probe: EX3DV4 - SN3710; ConvF(4.438, 4.985, 5.123); Calibrated: 2011/2/25
- Sensor-Surface: 4mm (Mechanical Surface Detection)
- Electronics: DAE4 Sn1220; Calibrated: 2010/12/3
- Phantom: SAM1; Type: SAM; Serial: TP1561
- Measurement SW: DASY5, V5.2 Build 162; SEMCAD X Version 14.0 Build 59

Configuration/GPRS 850 Mid Body-Front/Area Scan (9x15x1): Measurement grid: dx=10mm, dy=10mm

Maximum value of SAR (measured) = 0.306 mW/g

Configuration/GPRS 850 Mid Body-Front/Zoom Scan (5x5x7)/Cube 0: Measurement grid: dx=8mm, dy=8mm, dz=5mm, Reference Value = 12.9 V/m; Power Drift = 0.030 dB

Peak SAR (extrapolated) = 0.401 W/kg

SAR(1 g) = 0.294 mW/g; SAR(10 g) = 0.209 mW/g Maximum value of SAR (measured) = 0.310 mW/g

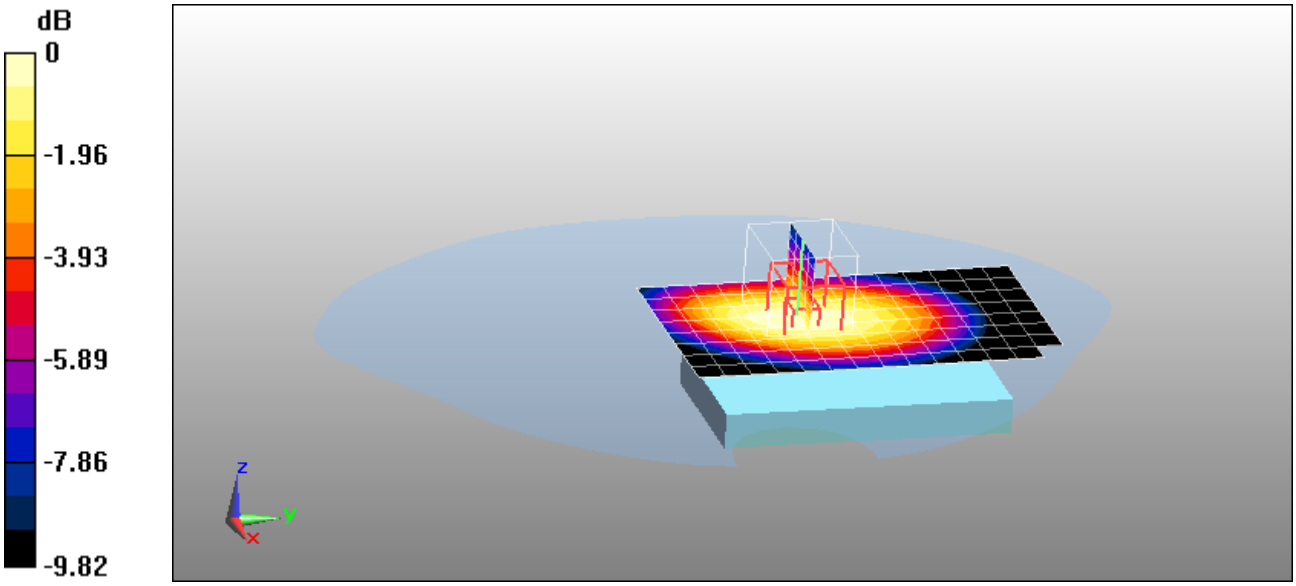

0 dB = 0.310mW/g

Date/Time: 13-Mar-2011

Test Laboratory: QuieTek Lab

GPRS 850 Mid Body-Back(4up)

DUT: Mobile Phone ; Type: PT-7

Communication System: GPRS/EGPRS-4 Slot; Communication System Band: GSM 850; Duty Cycle: 1:1.0; Frequency: 836.6 MHz; Medium parameters used: f = 836.6 MHz; σ = 0.99 mho/m; εr = 54.2; ρ = 1000 kg/m3 ; Phantom section: Flat Section

Ambient temperature (℃): 21.5, Liquid temperature (℃): 21.0

DASY5 Configuration:

- Probe: EX3DV4 - SN3710; ConvF(4.438, 4.985, 5.123); Calibrated: 2011/2/25
- Sensor-Surface: 4mm (Mechanical Surface Detection)
- Electronics: DAE4 Sn1220; Calibrated: 2010/12/3
- Phantom: SAM1; Type: SAM; Serial: TP1561
- Measurement SW: DASY5, V5.2 Build 162; SEMCAD X Version 14.0 Build 59

Configuration/GPRS 850 Mid Body-Back/Area Scan (9x15x1): Measurement grid: dx=10mm, dy=10mm

Maximum value of SAR (measured) = 0.442 mW/g

Configuration/GPRS 850 Mid Body-Back/Zoom Scan (5x5x7)/Cube 0: Measurement grid: dx=8mm, dy=8mm, dz=5mm, Reference Value = 14.3 V/m; Power Drift = 0.033 dB

Peak SAR (extrapolated) = 0.575 W/kg

SAR(1 g) = 0.437 mW/g; SAR(10 g) = 0.318 mW/g Maximum value of SAR (measured) = 0.459 mW/g

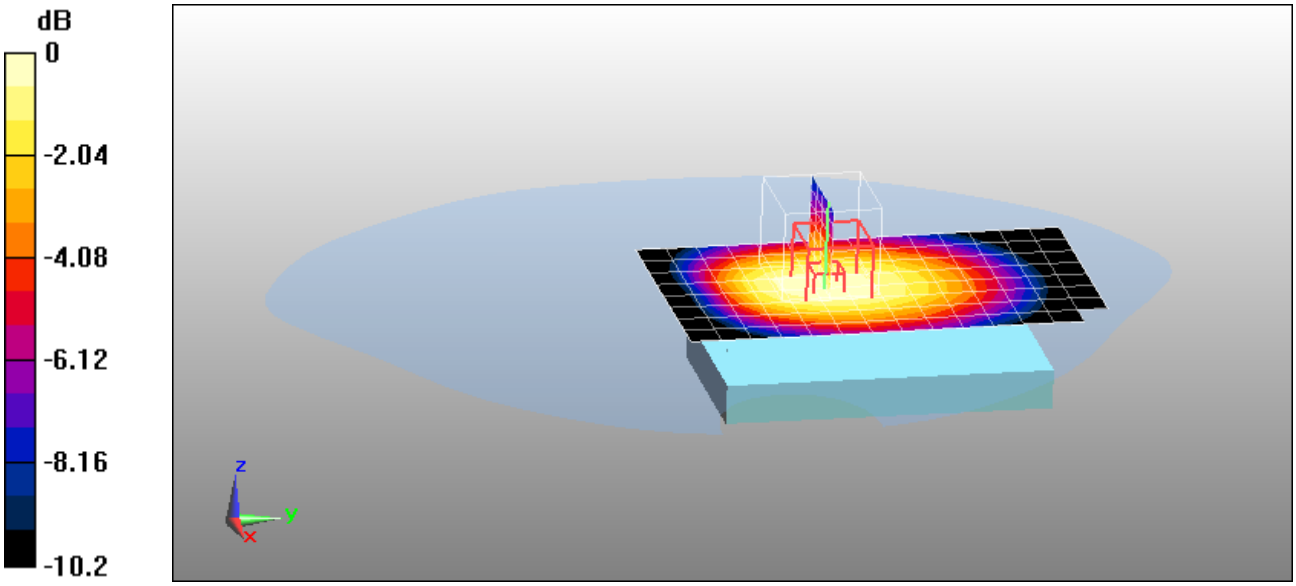

0 dB = 0.459mW/g

Date/Time: 13-Mar-2011

Test Laboratory: QuieTek Lab

GPRS 850 Mid Body-Back(3up) (With Headset)

DUT: Mobile Phone ; Type: PT-7

Communication System: GPRS/EGPRS-3 Slot; Communication System Band: GSM 850; Duty Cycle: 1:2.0; Frequency: 836.6 MHz; Medium parameters used: f = 836.6 MHz; σ = 0.99 mho/m; εr = 54.2; ρ = 1000 kg/m3 ; Phantom section: Flat Section

Ambient temperature (℃): 21.5, Liquid temperature (℃): 21.0

DASY5 Configuration:

- Probe: EX3DV4 - SN3710; ConvF(4.438, 4.985, 5.123); Calibrated: 2011/2/25
- Sensor-Surface: 4mm (Mechanical Surface Detection)
- Electronics: DAE4 Sn1220; Calibrated: 2010/12/3
- Phantom: SAM1; Type: SAM; Serial: TP1561
- Measurement SW: DASY5, V5.2 Build 162; SEMCAD X Version 14.0 Build 59

Configuration/GPRS 850 Mid Body-Back/Area Scan (9x15x1): Measurement grid: dx=10mm, dy=10mm

Maximum value of SAR (measured) = 0.202 mW/g

Configuration/GPRS 850 Mid Body-Back/Zoom Scan (5x5x7)/Cube 0: Measurement grid: dx=8mm, dy=8mm, dz=5mm, Reference Value = 9.5 V/m; Power Drift = 0.066 dB

Peak SAR (extrapolated) = 0.251 W/kg

SAR(1 g) = 0.192 mW/g; SAR(10 g) = 0.140 mW/g Maximum value of SAR (measured) = 0.201 mW/g

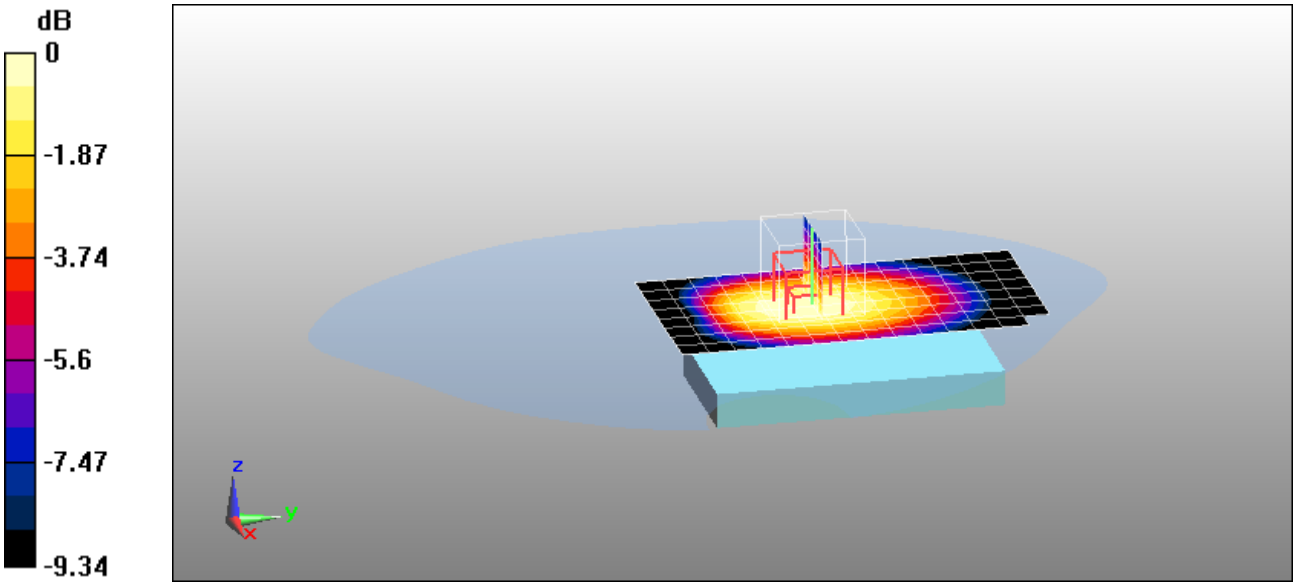

0 dB = 0.201mW/g

Date/Time: 13-Mar-2011

Test Laboratory: QuieTek Lab

GSM850 Mid Right-Touch <SIM 2>

DUT: Mobile Phone ; Type: PT-7

Communication System: Generic GSM; Communication System Band: GSM 850 (824.0 - 849.0 MHz); Duty Cycle: 1:8.3; Frequency: 836.6 MHz; Medium parameters used: f = 836.6 MHz; σ = 0.92 mho/m; εr = 41.4; ρ = 1000 kg/m3 ; Phantom section: Right Section

Ambient temperature (℃): 21.5, Liquid temperature (℃): 21.0

DASY5 Configuration:

- Probe: EX3DV4 - SN3710; ConvF(3.843, 4.303, 4.435); Calibrated: 2011/2/25
- Sensor-Surface: 4mm (Mechanical Surface Detection)
- Electronics: DAE4 Sn1220; Calibrated: 2010/12/3
- Phantom: SAM1; Type: SAM; Serial: TP1561
- Measurement SW: DASY5, V5.2 Build 162; SEMCAD X Version 14.0 Build 59

Configuration/GSM850 Mid Right-Touch/Area Scan (8x14x1): Measurement grid: dx=10mm, dy=10mm

Maximum value of SAR (measured) = 0.347 mW/g

Configuration/GSM850 Mid Right-Touch/Zoom Scan (5x5x7)/Cube 0: Measurement grid: dx=8mm, dy=8mm, dz=5mm, Reference Value = 15.9 V/m; Power Drift = 0.046 dB

Peak SAR (extrapolated) = 0.444 W/kg

SAR(1 g) = 0.328 mW/g; SAR(10 g) = 0.220 mW/g Maximum value of SAR (measured) = 0.343 mW/g

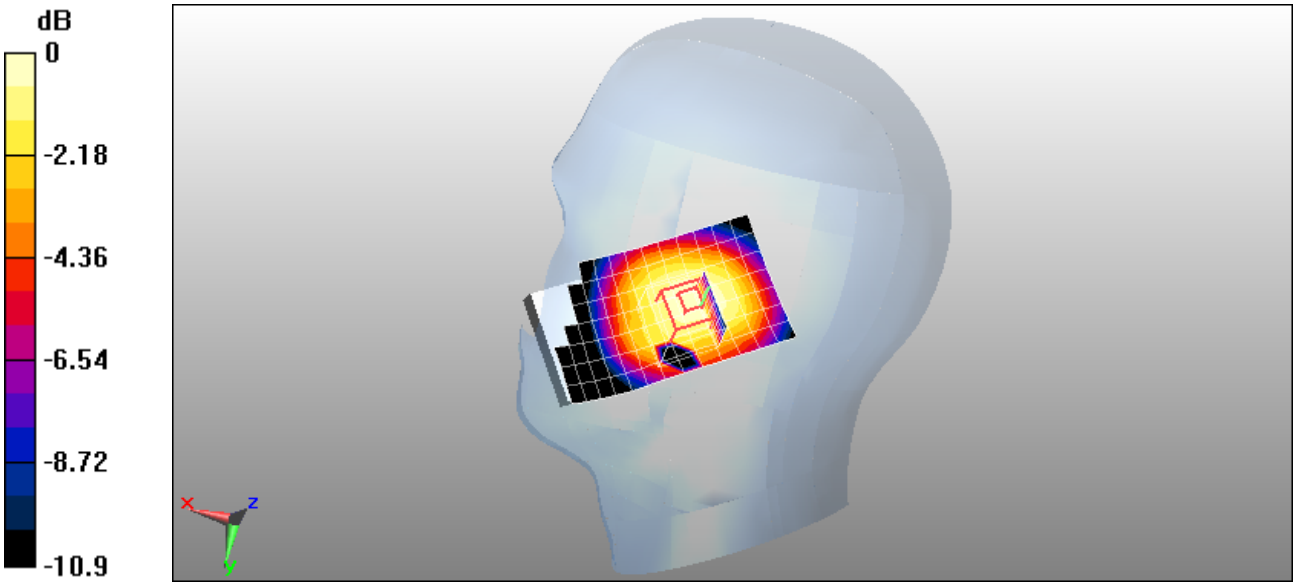

0 dB = 0.343mW/g

Date/Time: 13-Mar-2011

Test Laboratory: QuieTek Lab

PCS 1900 Low Left-Touch

DUT: Mobile Phone ; Type: PT-7

Communication System: Generic GSM; Communication System Band: PCS 1900 (1850.0 - 1910.0 MHz); Duty Cycle: 1:8.3; Frequency: 1850.2 MHz; Medium parameters used: f = 1850.2 MHz; σ = 1.41 mho/m; εr = 39.3; ρ = 1000 kg/m3 ; Phantom section: Left Section

Ambient temperature (℃): 21.5, Liquid temperature (℃): 21.0

DASY5 Configuration:

- Probe: EX3DV4 - SN3710; ConvF(3.609, 4.015, 4.146); Calibrated: 2011/2/25
- Sensor-Surface: 4mm (Mechanical Surface Detection)
- Electronics: DAE4 Sn1220; Calibrated: 2010/12/3
- Phantom: SAM2; Type: SAM; Serial: TP1562
- Measurement SW: DASY5, V5.2 Build 162; SEMCAD X Version 14.0 Build 59

Configuration/PCS 1900 Low Left-Touch/Area Scan (9x15x1): Measurement grid: dx=10mm, dy=10mm

Maximum value of SAR (measured) = 0.490 mW/g

Configuration/PCS 1900 Low Left-Touch/Zoom Scan (5x5x7)/Cube 0: Measurement grid: dx=8mm, dy=8mm, dz=5mm, Reference Value = 11.6 V/m; Power Drift = -0.024 dB

Peak SAR (extrapolated) = 0.947 W/kg

SAR(1 g) = 0.452 mW/g; SAR(10 g) = 0.227 mW/g Maximum value of SAR (measured) = 0.505 mW/g

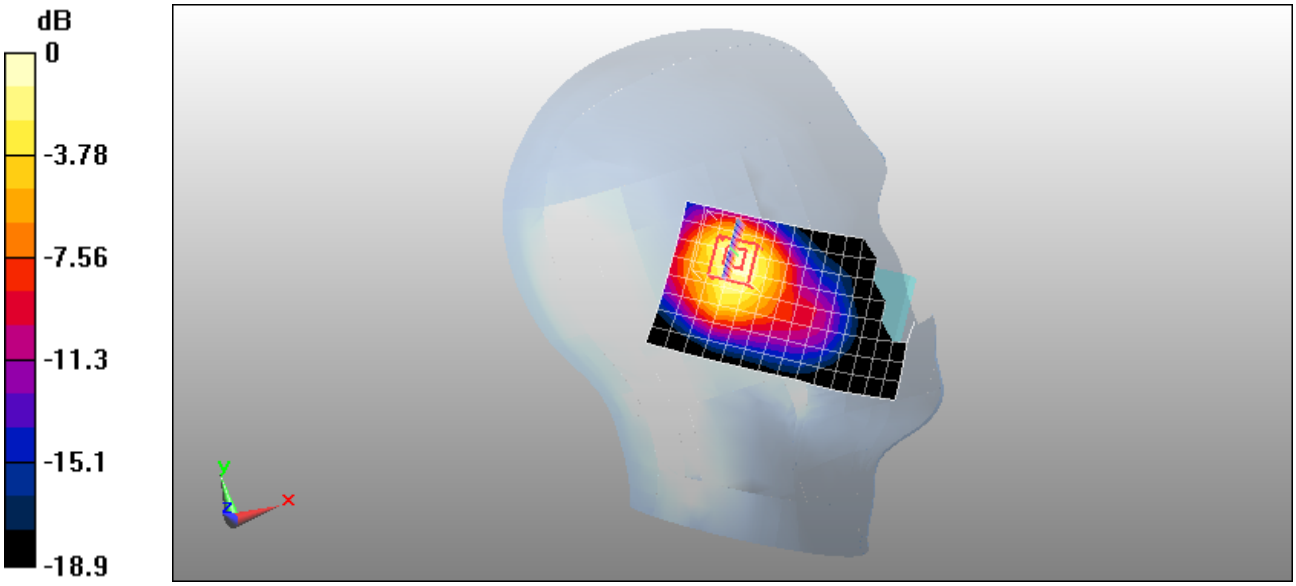

0 dB = 0.505mW/g

Z-Axis Plot

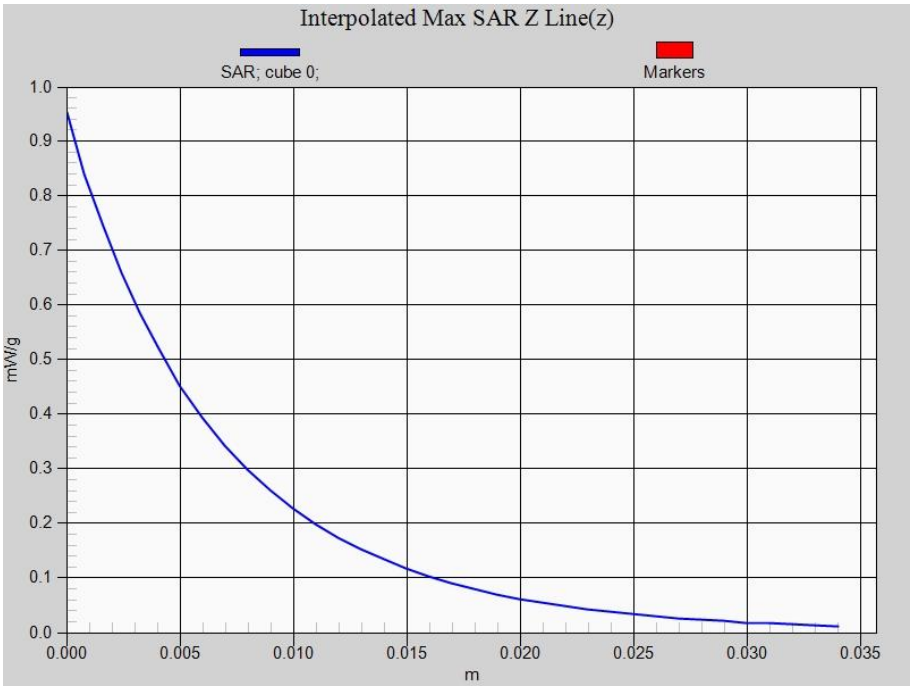
Interpolated Max SAR Z Line(z)
SAR; cube 0;
Markers
mW/g
1.0
0.9
0.8
0.7
0.6
0.5
0.4
0.3
0.2
0.1
0.0
0.000
0.005
0.010
0.015
0.020
0.025
0.030
0.035
m

Date/Time: 13-Mar-2011

Test Laboratory: QuieTek Lab

PCS 1900 Mid Left-Touch

DUT: Mobile Phone ; Type: PT-7

Communication System: Generic GSM; Communication System Band: PCS 1900 (1850.0 - 1910.0 MHz); Duty Cycle: 1:8.3; Frequency: 1880 MHz; Medium parameters used: f = 1880 MHz; σ = 1.43 mho/m; εr = 39.2; ρ = 1000 kg/m3 ; Phantom section: Left Section

Ambient temperature (℃): 21.5, Liquid temperature (℃): 21.0

DASY5 Configuration:

- Probe: EX3DV4 - SN3710; ConvF(3.609, 4.015, 4.146); Calibrated: 2011/2/25
- Sensor-Surface: 4mm (Mechanical Surface Detection)
- Electronics: DAE4 Sn1220; Calibrated: 2010/12/3
- Phantom: SAM2; Type: SAM; Serial: TP1562
- Measurement SW: DASY5, V5.2 Build 162; SEMCAD X Version 14.0 Build 59

Configuration/PCS 1900 Mid Left-Touch/Area Scan (9x15x1): Measurement grid: dx=10mm, dy=10mm

Maximum value of SAR (measured) = 0.327 mW/g

Configuration/PCS 1900 Mid Left-Touch/Zoom Scan (5x5x7)/Cube 0: Measurement grid: dx=8mm, dy=8mm, dz=5mm, Reference Value = 9.49 V/m; Power Drift = -0.057 dB

Peak SAR (extrapolated) = 0.608 W/kg

SAR(1 g) = 0.294 mW/g; SAR(10 g) = 0.148 mW/g Maximum value of SAR (measured) = 0.329 mW/g

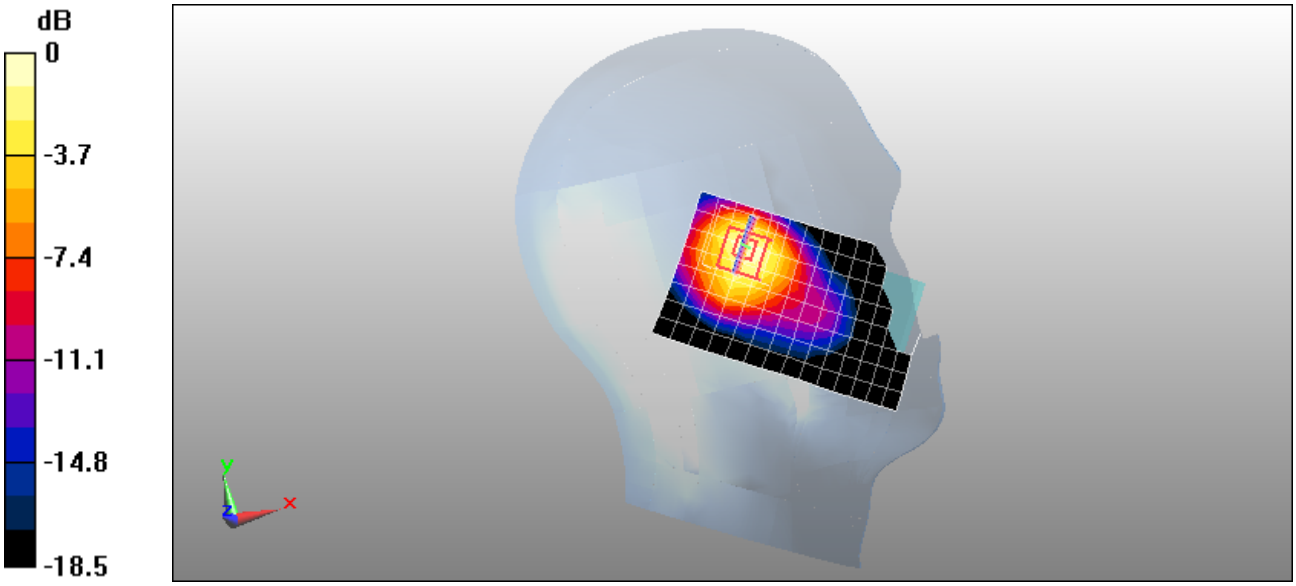

0 dB = 0.329mW/g

Date/Time: 13-Mar-2011

Test Laboratory: QuieTek Lab

PCS 1900 High Left-Touch

DUT: Mobile Phone ; Type: PT-7

Communication System: Generic GSM; Communication System Band: PCS 1900 (1850.0 - 1910.0 MHz); Duty Cycle: 1:8.3; Frequency: 1909.8 MHz; Medium parameters used: f = 1909.8 MHz; σ = 1.45 mho/m; εr = 39.1; ρ = 1000 kg/m3 ; Phantom section: Left Section

Ambient temperature (℃): 21.5, Liquid temperature (℃): 21.0

DASY5 Configuration:

- Probe: EX3DV4 - SN3710; ConvF(3.609, 4.015, 4.146); Calibrated: 2011/2/25
- Sensor-Surface: 4mm (Mechanical Surface Detection)
- Electronics: DAE4 Sn1220; Calibrated: 2010/12/3
- Phantom: SAM2; Type: SAM; Serial: TP1562
- Measurement SW: DASY5, V5.2 Build 162; SEMCAD X Version 14.0 Build 59

Configuration/PCS 1900 High Left-Touch/Area Scan (9x15x1): Measurement grid: dx=10mm, dy=10mm

Maximum value of SAR (measured) = 0.318 mW/g

Configuration/PCS 1900 High Left-Touch/Zoom Scan (5x5x7)/Cube 0: Measurement grid: dx=8mm, dy=8mm, dz=5mm, Reference Value = 8.37 V/m; Power Drift = 0.024 dB

Peak SAR (extrapolated) = 0.589 W/kg

SAR(1 g) = 0.285 mW/g; SAR(10 g) = 0.141 mW/g Maximum value of SAR (measured) = 0.322 mW/g

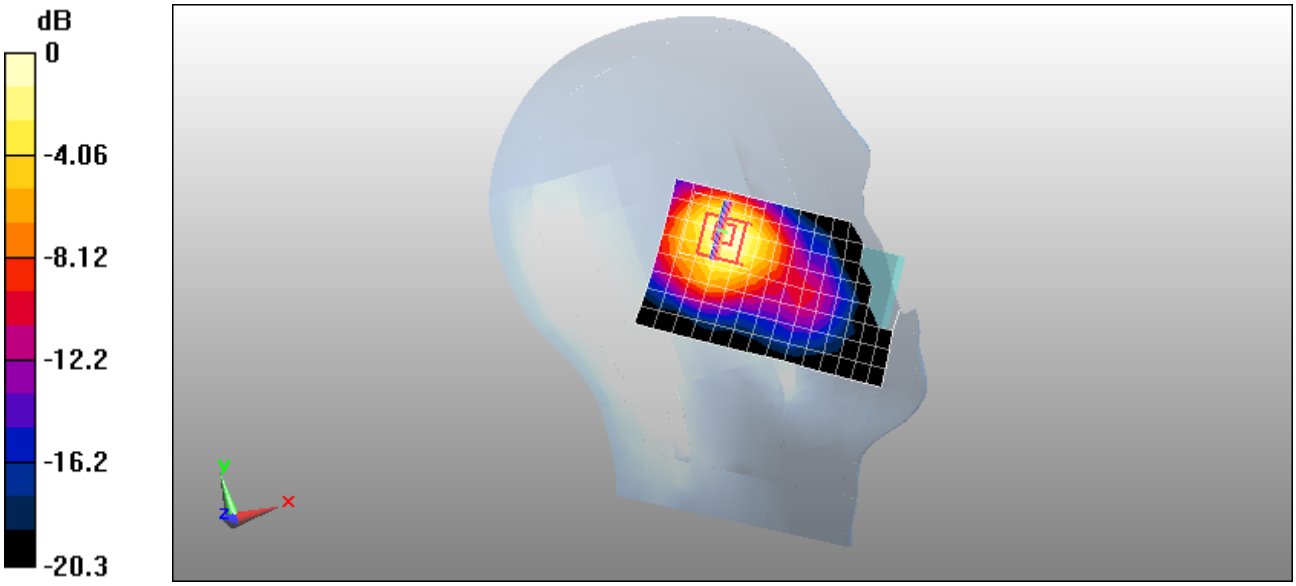

0 dB = 0.322mW/g

Date/Time: 13-Mar-2011

Test Laboratory: QuieTek Lab

PCS 1900 Mid Left-Tilt

DUT: Mobile Phone ; Type: PT-7

Communication System: Generic GSM; Communication System Band: PCS 1900 (1850.0 - 1910.0 MHz); Duty Cycle: 1:8.3; Frequency: 1880 MHz; Medium parameters used: f = 1880 MHz; σ = 1.43 mho/m; εr = 39.2; ρ = 1000 kg/m3 ; Phantom section: Left Section

Ambient temperature (℃): 21.5, Liquid temperature (℃): 21.0

DASY5 Configuration:

- Probe: EX3DV4 - SN3710; ConvF(3.609, 4.015, 4.146); Calibrated: 2011/2/25
- Sensor-Surface: 4mm (Mechanical Surface Detection)
- Electronics: DAE4 Sn1220; Calibrated: 2010/12/3
- Phantom: SAM2; Type: SAM; Serial: TP1562
- Measurement SW: DASY5, V5.2 Build 162; SEMCAD X Version 14.0 Build 59

Configuration/PCS 1900 Mid Left-Tilt/Area Scan (9x15x1): Measurement grid: dx=10mm, dy=10mm

Maximum value of SAR (measured) = 0.278 mW/g

Configuration/PCS 1900 Mid Left-Tilt/Zoom Scan (5x5x7)/Cube 0: Measurement grid: dx=8mm, dy=8mm, dz=5mm, Reference Value = 10.5 V/m; Power Drift = -0.015 dB

Peak SAR (extrapolated) = 0.552 W/kg

SAR(1 g) = 0.269 mW/g; SAR(10 g) = 0.140 mW/g Maximum value of SAR (measured) = 0.296 mW/g

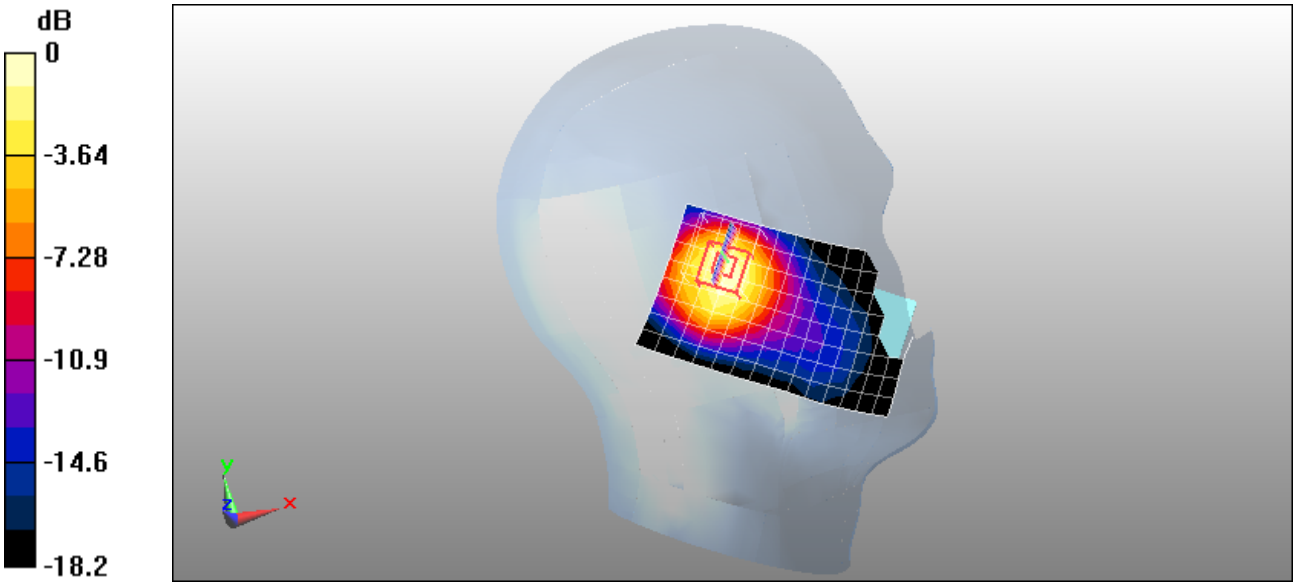

0 dB = 0.296mW/g

Date/Time: 13-Mar-2011

Test Laboratory: QuieTek Lab

PCS 1900 Low Right-Touch

DUT: Mobile Phone ; Type: PT-7

Communication System: Generic GSM; Communication System Band: PCS 1900 (1850.0 - 1910.0 MHz); Duty Cycle: 1:8.3; Frequency: 1850.2 MHz; Medium parameters used: f = 1850.2 MHz; σ = 1.41 mho/m; εr = 39.3; ρ = 1000 kg/m3 ; Phantom section: Right Section

Ambient temperature (℃): 21.5, Liquid temperature (℃): 21.0

DASY5 Configuration:

- Probe: EX3DV4 - SN3710; ConvF(3.609, 4.015, 4.146); Calibrated: 2011/2/25
- Sensor-Surface: 4mm (Mechanical Surface Detection)
- Electronics: DAE4 Sn1220; Calibrated: 2010/12/3
- Phantom: SAM2; Type: SAM; Serial: TP1562
- Measurement SW: DASY5, V5.2 Build 162; SEMCAD X Version 14.0 Build 59

Configuration/PCS 1900 Low Right-Touch/Area Scan (9x15x1): Measurement grid: dx=10mm, dy=10mm

Maximum value of SAR (measured) = 0.338 mW/g

Configuration/PCS 1900 Low Right-Touch/Zoom Scan (5x5x7)/Cube 0: Measurement grid: dx=8mm, dy=8mm, dz=5mm, Reference Value = 11.2 V/m; Power Drift = 0.017 dB

Peak SAR (extrapolated) = 0.616 W/kg

SAR(1 g) = 0.332 mW/g; SAR(10 g) = 0.184 mW/g Maximum value of SAR (measured) = 0.363 mW/g

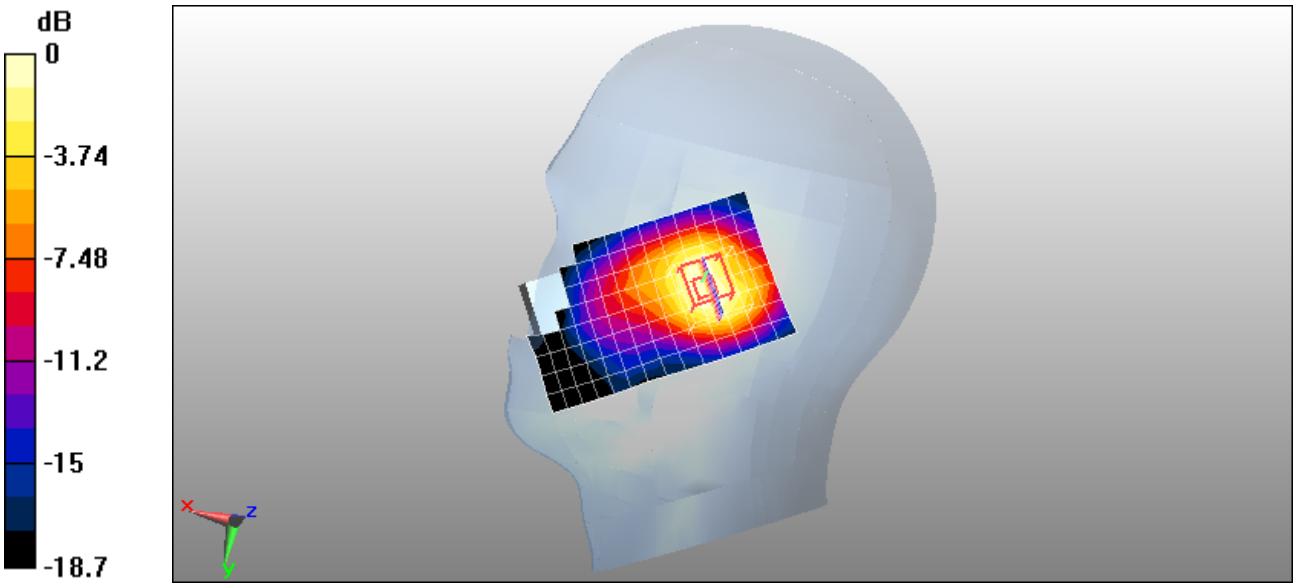

0 dB = 0.363mW/g

Date/Time: 13-Mar-2011

Test Laboratory: QuieTek Lab

PCS 1900 Mid Right-Touch

DUT: Mobile Phone ; Type: PT-7

Communication System: Generic GSM; Communication System Band: PCS 1900 (1850.0 - 1910.0 MHz); Duty Cycle: 1:8.3; Frequency: 1880 MHz; Medium parameters used: f = 1880 MHz; σ = 1.43 mho/m; εr = 39.2; ρ = 1000 kg/m3 ; Phantom section: Right Section

Ambient temperature (℃): 21.5, Liquid temperature (℃): 21.0

DASY5 Configuration:

- Probe: EX3DV4 - SN3710; ConvF(3.609, 4.015, 4.146); Calibrated: 2011/2/25
- Sensor-Surface: 4mm (Mechanical Surface Detection)
- Electronics: DAE4 Sn1220; Calibrated: 2010/12/3
- Phantom: SAM2; Type: SAM; Serial: TP1562
- Measurement SW: DASY5, V5.2 Build 162; SEMCAD X Version 14.0 Build 59

Configuration/PCS 1900 Mid Right-Touch/Area Scan (9x15x1): Measurement grid: dx=10mm, dy=10mm

Maximum value of SAR (measured) = 0.277 mW/g

Configuration/PCS 1900 Mid Right-Touch/Zoom Scan (5x5x7)/Cube 0: Measurement grid: dx=8mm, dy=8mm, dz=5mm, Reference Value = 11.8 V/m; Power Drift = -0.088 dB

Peak SAR (extrapolated) = 0.466 W/kg

SAR(1 g) = 0.253 mW/g; SAR(10 g) = 0.137 mW/g Maximum value of SAR (measured) = 0.274 mW/g

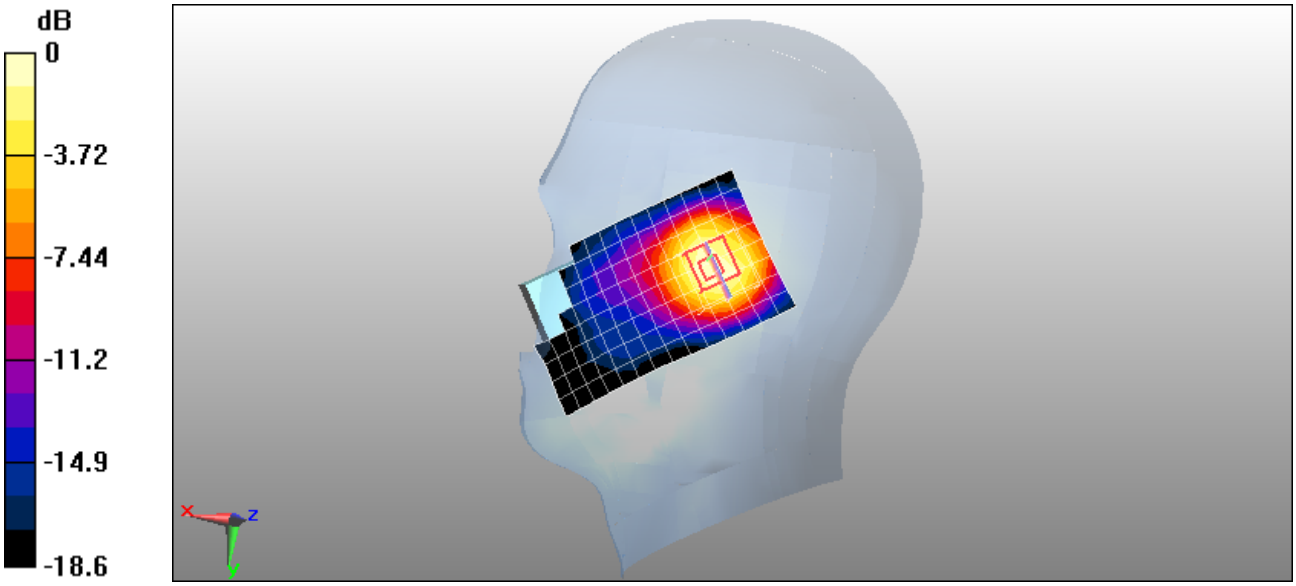

0 dB = 0.274mW/g

Date/Time: 13-Mar-2011

Test Laboratory: QuieTek Lab

PCS 1900 High Right-Touch

DUT: Mobile Phone ; Type: PT-7

Communication System: Generic GSM; Communication System Band: PCS 1900 (1850.0 - 1910.0 MHz); Duty Cycle: 1:8.3; Frequency: 1909.8 MHz; Medium parameters used: f = 1909.8 MHz; σ = 1.45 mho/m; εr = 39.1; ρ = 1000 kg/m3 ; Phantom section: Right Section

Ambient temperature (℃): 21.5, Liquid temperature (℃): 21.0

DASY5 Configuration:

- Probe: EX3DV4 - SN3710; ConvF(3.609, 4.015, 4.146); Calibrated: 2011/2/25
- Sensor-Surface: 4mm (Mechanical Surface Detection)
- Electronics: DAE4 Sn1220; Calibrated: 2010/12/3
- Phantom: SAM2; Type: SAM; Serial: TP1562
- Measurement SW: DASY5, V5.2 Build 162; SEMCAD X Version 14.0 Build 59

Configuration/PCS 1900 High Right-Touch/Area Scan (9x15x1): Measurement grid: dx=10mm, dy=10mm

Maximum value of SAR (measured) = 0.213 mW/g

Configuration/PCS 1900 High Right-Touch/Zoom Scan (5x5x7)/Cube 0: Measurement grid: dx=8mm, dy=8mm, dz=5mm, Reference Value = 9.14 V/m; Power Drift = -0.024 dB

Peak SAR (extrapolated) = 0.390 W/kg

SAR(1 g) = 0.208 mW/g; SAR(10 g) = 0.112 mW/g Maximum value of SAR (measured) = 0.228 mW/g

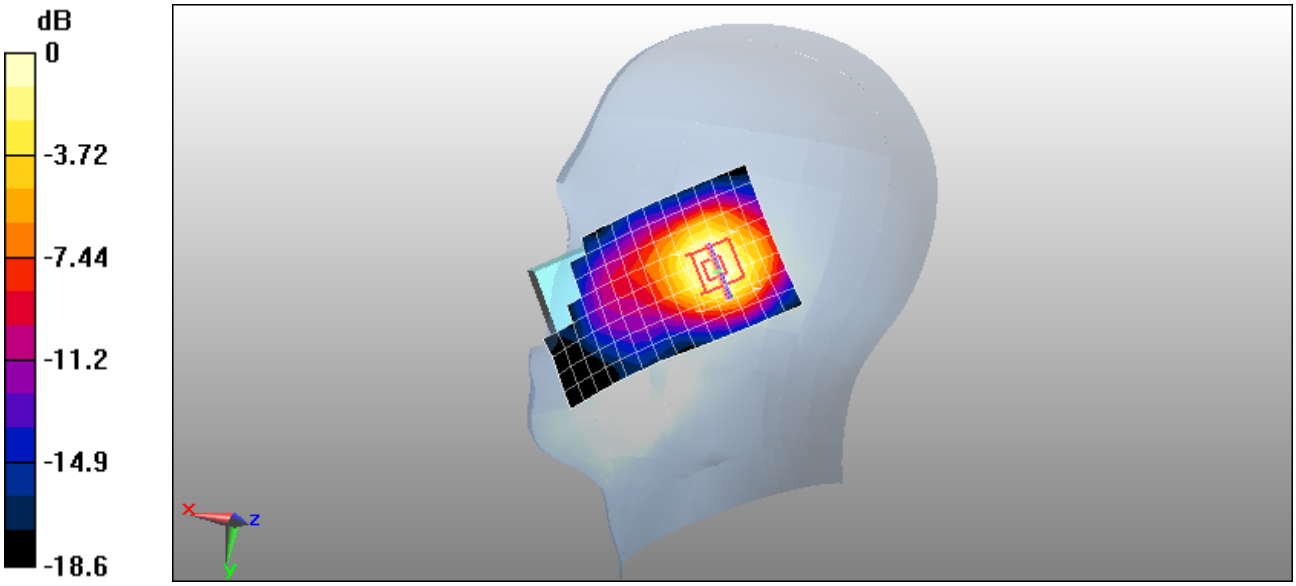

0 dB = 0.228mW/g

Date/Time: 13-Mar-2011

Test Laboratory: QuieTek Lab

PCS 1900 Mid Right-Tilt

DUT: Mobile Phone ; Type: PT-7

Communication System: Generic GSM; Communication System Band: PCS 1900 (1850.0 - 1910.0 MHz); Duty Cycle: 1:8.3; Frequency: 1880 MHz; Medium parameters used: f = 1880 MHz; σ = 1.43 mho/m; εr = 39.2; ρ = 1000 kg/m3 ; Phantom section: Right Section

Ambient temperature (℃): 21.5, Liquid temperature (℃): 21.0

DASY5 Configuration:

- Probe: EX3DV4 - SN3710; ConvF(3.609, 4.015, 4.146); Calibrated: 2011/2/25
- Sensor-Surface: 4mm (Mechanical Surface Detection)
- Electronics: DAE4 Sn1220; Calibrated: 2010/12/3
- Phantom: SAM2; Type: SAM; Serial: TP1562
- Measurement SW: DASY5, V5.2 Build 162; SEMCAD X Version 14.0 Build 59

Configuration/PCS 1900 Mid Right-Tilt/Area Scan (9x15x1): Measurement grid: dx=10mm, dy=10mm

Maximum value of SAR (measured) = 0.257 mW/g

Configuration/PCS 1900 Mid Right-Tilt/Zoom Scan (5x5x7)/Cube 0: Measurement grid: dx=8mm, dy=8mm, dz=5mm, Reference Value = 9.72 V/m; Power Drift = -0.006 dB

Peak SAR (extrapolated) = 0.407 W/kg

SAR(1 g) = 0.218 mW/g; SAR(10 g) = 0.121 mW/g Maximum value of SAR (measured) = 0.238 mW/g

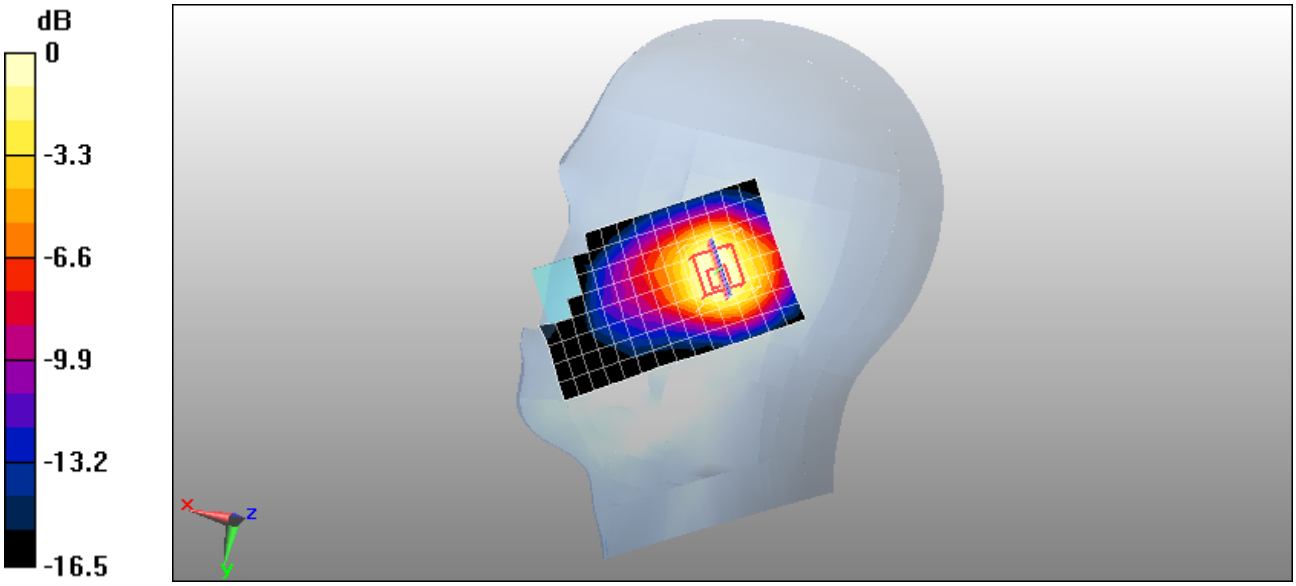

0 dB = 0.238mW/g

Date/Time: 13-Mar-2011

Test Laboratory: QuieTek Lab

PCS1900 Low Body-Back

DUT: Mobile Phone ; Type: PT-7

Communication System: Generic GSM; Communication System Band: PCS 1900 (1850.0 - 1910.0 MHz); Duty Cycle: 1:8.3; Frequency: 1850.2 MHz; Medium parameters used: f = 1850.2 MHz; σ = 1.5 mho/m; εr = 53.2; ρ = 1000 kg/m3 ; Phantom section: Flat Section

Ambient temperature (℃): 21.5, Liquid temperature (℃): 21.0

DASY5 Configuration:

- Probe: EX3DV4 - SN3710; ConvF(4.193, 4.677, 4.833); Calibrated: 2011/2/25
- Sensor-Surface: 4mm (Mechanical Surface Detection)
- Electronics: DAE4 Sn1220; Calibrated: 2010/12/3
- Phantom: SAM2; Type: SAM; Serial: TP1562
- Measurement SW: DASY5, V5.2 Build 162; SEMCAD X Version 14.0 Build 59

Configuration/PCS 1900 Low Body-Back/Area Scan (9x15x1): Measurement grid: dx=10mm, dy=10mm

Maximum value of SAR (measured) = 0.112 mW/g

Configuration/PCS 1900 Low Body-Back/Zoom Scan (5x5x7)/Cube 0: Measurement grid: dx=8mm, dy=8mm, dz=5mm, Reference Value = 7.47 V/m; Power Drift = -0.022 dB

Peak SAR (extrapolated) = 0.170 W/kg

SAR(1 g) = 0.104 mW/g; SAR(10 g) = 0.064 mW/g Maximum value of SAR (measured) = 0.112 mW/g

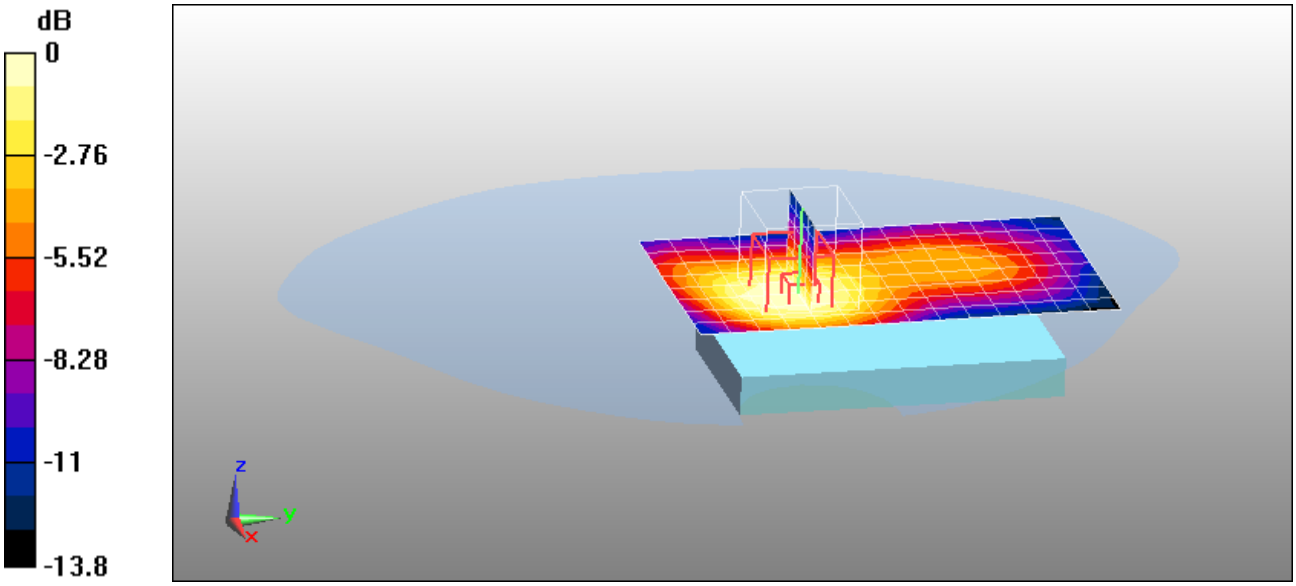

0 dB = 0.112mW/g

Date/Time: 13-Mar-2011

Test Laboratory: QuieTek Lab

PCS1900 Mid Body-Back

DUT: Mobile Phone ; Type: PT-7

Communication System: Generic GSM; Communication System Band: PCS 1900 (1850.0 - 1910.0 MHz); Duty Cycle: 1:8.3; Frequency: 1880 MHz; Medium parameters used: f = 1880 MHz; σ = 1.53 mho/m; εr = 53.1; ρ = 1000 kg/m3 ; Phantom section: Flat Section

Ambient temperature (℃): 21.5, Liquid temperature (℃): 21.0

DASY5 Configuration:

- Probe: EX3DV4 - SN3710; ConvF(4.193, 4.677, 4.833); Calibrated: 2011/2/25
- Sensor-Surface: 4mm (Mechanical Surface Detection)
- Electronics: DAE4 Sn1220; Calibrated: 2010/12/3
- Phantom: SAM2; Type: SAM; Serial: TP1562
- Measurement SW: DASY5, V5.2 Build 162; SEMCAD X Version 14.0 Build 59

Configuration/PCS 1900 Mid Body-Back/Area Scan (9x15x1): Measurement grid: dx=10mm, dy=10mm

Maximum value of SAR (measured) = 0.092 mW/g

Configuration/PCS 1900 Mid Body-Back/Zoom Scan (5x5x7)/Cube 0: Measurement grid: dx=8mm, dy=8mm, dz=5mm, Reference Value = 6.55 V/m; Power Drift = 0.048 dB

Peak SAR (extrapolated) = 0.133 W/kg

SAR(1 g) = 0.081 mW/g; SAR(10 g) = 0.050 mW/g Maximum value of SAR (measured) = 0.090 mW/g

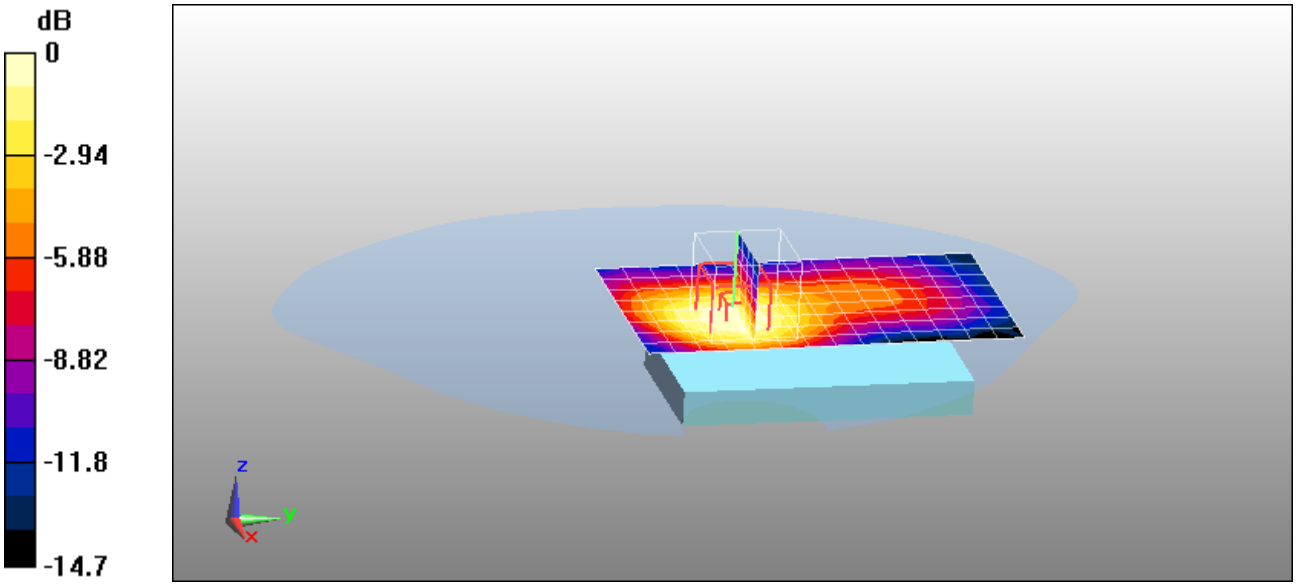

0 dB = 0.090mW/g

Date/Time: 13-Mar-2011

Test Laboratory: QuieTek Lab

PCS1900 High Body-Back

DUT: Mobile Phone ; Type: PT-7

Communication System: Generic GSM; Communication System Band: PCS 1900 (1850.0 - 1910.0 MHz); Duty Cycle: 1:8.3; Frequency: 1909.8 MHz; Medium parameters used: f = 1909.8 MHz; σ = 1.56 mho/m; εr = 53; ρ = 1000 kg/m3 ; Phantom section: Flat Section

Ambient temperature (℃): 21.5, Liquid temperature (℃): 21.0

DASY5 Configuration:

- Probe: EX3DV4 - SN3710; ConvF(4.193, 4.677, 4.833); Calibrated: 2011/2/25
- Sensor-Surface: 4mm (Mechanical Surface Detection)
- Electronics: DAE4 Sn1220; Calibrated: 2010/12/3
- Phantom: SAM2; Type: SAM; Serial: TP1562
- Measurement SW: DASY5, V5.2 Build 162; SEMCAD X Version 14.0 Build 59

Configuration/PCS 1900 High Body-Back/Area Scan (9x15x1): Measurement grid: dx=10mm, dy=10mm

Maximum value of SAR (measured) = 0.092 mW/g

Configuration/PCS 1900 High Body-Back/Zoom Scan (5x5x7)/Cube 0: Measurement grid: dx=8mm, dy=8mm, dz=5mm, Reference Value = 7.01 V/m; Power Drift = -0.054 dB

Peak SAR (extrapolated) = 0.141 W/kg

SAR(1 g) = 0.087 mW/g; SAR(10 g) = 0.055 mW/g Maximum value of SAR (measured) = 0.092 mW/g

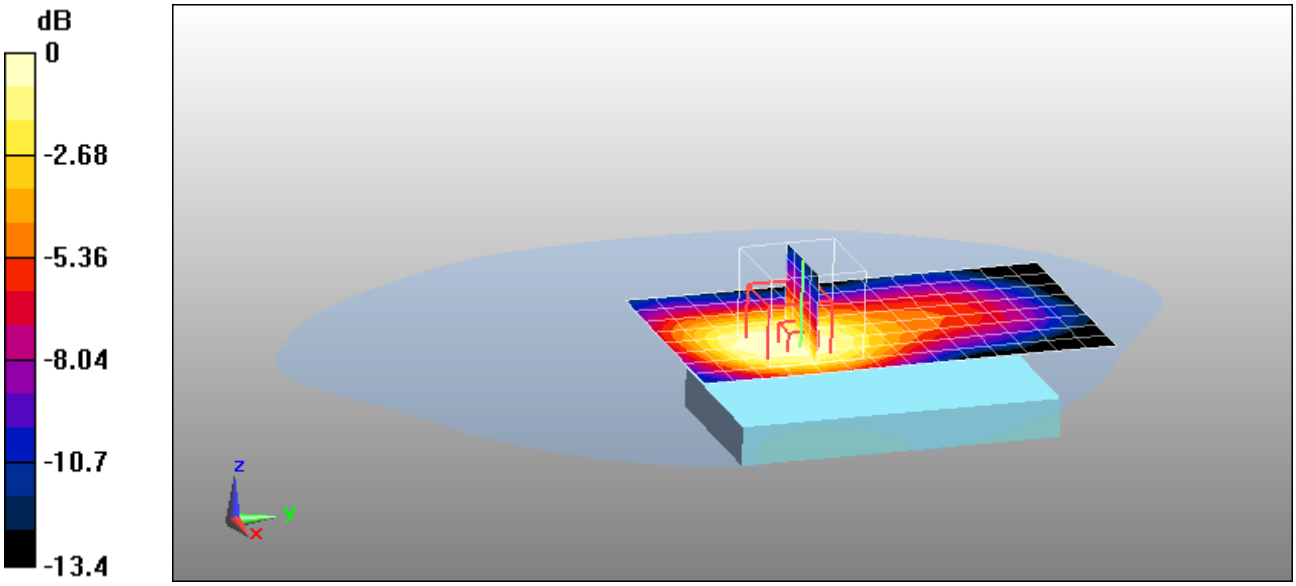

0 dB = 0.092mW/g

Date/Time: 13-Mar-2011

Test Laboratory: QuieTek Lab

PCS1900 Mid Body-Front

DUT: Mobile Phone ; Type: PT-7

Communication System: Generic GSM; Communication System Band: PCS 1900 (1850.0 - 1910.0 MHz); Duty Cycle: 1:8.3; Frequency: 1880 MHz; Medium parameters used: f = 1880 MHz; σ = 1.53 mho/m; εr = 53.1; ρ = 1000 kg/m3 ; Phantom section: Flat Section

Ambient temperature (℃): 21.5, Liquid temperature (℃): 21.0

DASY5 Configuration:

- Probe: EX3DV4 - SN3710; ConvF(4.193, 4.677, 4.833); Calibrated: 2011/2/25
- Sensor-Surface: 4mm (Mechanical Surface Detection)
- Electronics: DAE4 Sn1220; Calibrated: 2010/12/3
- Phantom: SAM2; Type: SAM; Serial: TP1562
- Measurement SW: DASY5, V5.2 Build 162; SEMCAD X Version 14.0 Build 59

Configuration/PCS 1900 Mid Body-Front/Area Scan (9x15x1): Measurement grid: dx=10mm, dy=10mm

Maximum value of SAR (measured) = 0.078 mW/g

Configuration/PCS 1900 Mid Body-Front/Zoom Scan (5x5x7)/Cube 0: Measurement grid: dx=8mm, dy=8mm, dz=5mm, Reference Value = 4.93 V/m; Power Drift = 0.079 dB

Peak SAR (extrapolated) = 0.109 W/kg

SAR(1 g) = 0.067 mW/g; SAR(10 g) = 0.039 mW/g Maximum value of SAR (measured) = 0.072 mW/g

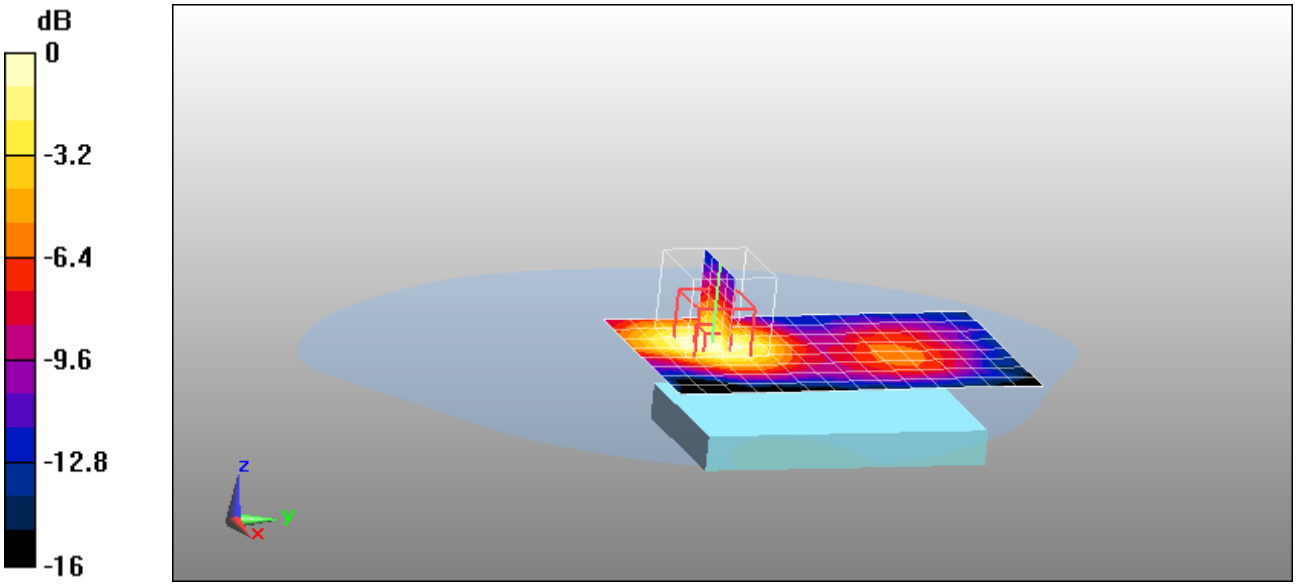

0 dB = 0.072mW/g

Date/Time: 13-Mar-2011

Test Laboratory: QuieTek Lab

GPRS 1900 Mid Body-Back(2up)

DUT: Mobile Phone ; Type: PT-7

Communication System: GPRS/EGPRS-2 Slot; Communication System Band: PCS 1900; Duty Cycle: 1:4.1; Frequency: 1880 MHz; Medium parameters used: f = 1880 MHz; σ = 1.53 mho/m; εr = 53.1; ρ = 1000 kg/m3 ;

Phantom section: Flat Section

Ambient temperature (℃): 21.5, Liquid temperature (℃): 21.0

DASY5 Configuration:

- Probe: EX3DV4 - SN3710; ConvF(4.193, 4.677, 4.833); Calibrated: 2011/2/25
- Sensor-Surface: 4mm (Mechanical Surface Detection)
- Electronics: DAE4 Sn1220; Calibrated: 2010/12/3
- Phantom: SAM2; Type: SAM; Serial: TP1562
- Measurement SW: DASY5, V5.2 Build 162; SEMCAD X Version 14.0 Build 59

Configuration/GPRS 1900 Mid Body-Back/Area Scan (9x15x1): Measurement grid: dx=10mm, dy=10mm

Maximum value of SAR (measured) = 0.205 mW/g

Configuration/GPRS 1900 Mid Body-Back/Zoom Scan (5x5x7)/Cube 0: Measurement grid: dx=8mm, dy=8mm, dz=5mm, Reference Value = 10.4 V/m; Power Drift = -0.003 dB

Peak SAR (extrapolated) = 0.311 W/kg

SAR(1 g) = 0.194 mW/g; SAR(10 g) = 0.119 mW/g Maximum value of SAR (measured) = 0.208 mW/g

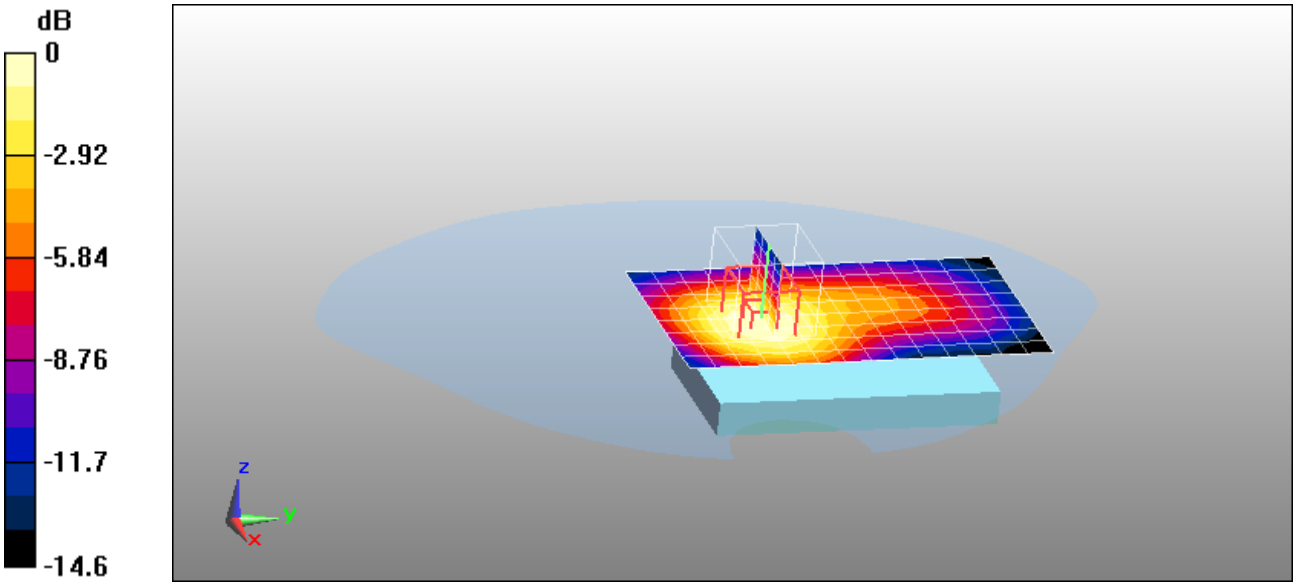

0 dB = 0.208mW/g

Date/Time: 13-Mar-2011

Test Laboratory: QuieTek Lab

GPRS 1900 Mid Body-Back(3up)

DUT: Mobile Phone ; Type: PT-7

Communication System: GPRS/EGPRS-3 Slot; Communication System Band: PCS1900; Duty Cycle: 1:2.0; Frequency: 1880 MHz; Medium parameters used: f = 1880 MHz; σ = 1.53 mho/m; εr = 53.1; ρ = 1000 kg/m3 ;

Phantom section: Flat Section

Ambient temperature (℃): 21.5, Liquid temperature (℃): 21.0

DASY5 Configuration:

- Probe: EX3DV4 - SN3710; ConvF(4.193, 4.677, 4.833); Calibrated: 2011/2/25
- Sensor-Surface: 4mm (Mechanical Surface Detection)
- Electronics: DAE4 Sn1220; Calibrated: 2010/12/3
- Phantom: SAM2; Type: SAM; Serial: TP1562
- Measurement SW: DASY5, V5.2 Build 162; SEMCAD X Version 14.0 Build 59

Configuration/GPRS 1900 Mid Body-Back/Area Scan (9x15x1): Measurement grid: dx=10mm, dy=10mm

Maximum value of SAR (measured) = 0.142 mW/g

Configuration/GPRS 1900 Mid Body-Back/Zoom Scan (5x5x7)/Cube 0: Measurement grid: dx=8mm, dy=8mm, dz=5mm, Reference Value = 8.15 V/m; Power Drift = 0.106 dB

Peak SAR (extrapolated) = 0.220 W/kg

SAR(1 g) = 0.133 mW/g; SAR(10 g) = 0.077 mW/g Maximum value of SAR (measured) = 0.145 mW/g

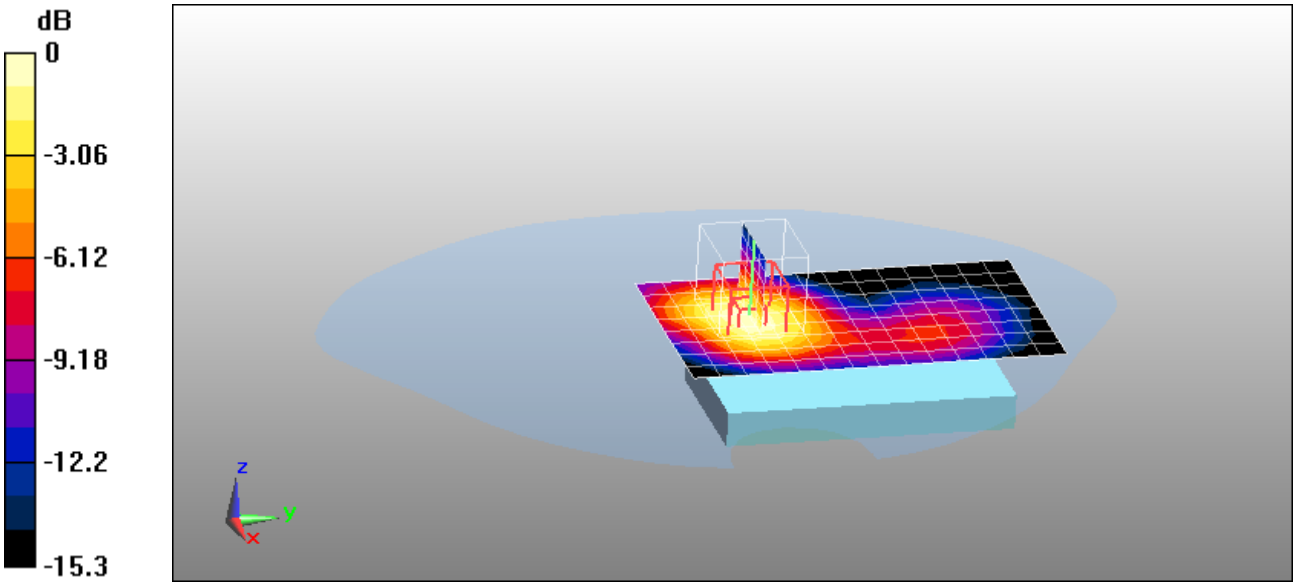

0 dB = 0.145mW/g

Date/Time: 13-Mar-2011

Test Laboratory: QuieTek Lab

GPRS 1900 Low Body-Back(4up)

DUT: Mobile Phone ; Type: PT-7

Communication System: GPRS/EGPRS-4 Slot; Communication System Band: PCS1900; Duty Cycle: 1:1.0; Frequency: 1850.2 MHz; Medium parameters used: f = 1850.2 MHz; σ = 1.5 mho/m; εr = 53.2; ρ = 1000 kg/m3 ; Phantom section: Flat Section

Ambient temperature (℃): 21.5, Liquid temperature (℃): 21.0

DASY5 Configuration:

- Probe: EX3DV4 - SN3710; ConvF(4.193, 4.677, 4.833); Calibrated: 2011/2/25
- Sensor-Surface: 4mm (Mechanical Surface Detection)
- Electronics: DAE4 Sn1220; Calibrated: 2010/12/3
- Phantom: SAM2; Type: SAM; Serial: TP1562
- Measurement SW: DASY5, V5.2 Build 162; SEMCAD X Version 14.0 Build 59

Configuration/GPRS 1900 Low Body-Back/Area Scan (9x15x1): Measurement grid: dx=10mm, dy=10mm

Maximum value of SAR (measured) = 0.241 mW/g

Configuration/GPRS 1900 Low Body-Back/Zoom Scan (5x5x7)/Cube 0: Measurement grid: dx=8mm, dy=8mm, dz=5mm, Reference Value = 12.1 V/m; Power Drift = -0.074 dB

Peak SAR (extrapolated) = 0.351 W/kg

SAR(1 g) = 0.220 mW/g; SAR(10 g) = 0.135 mW/g Maximum value of SAR (measured) = 0.238 mW/g

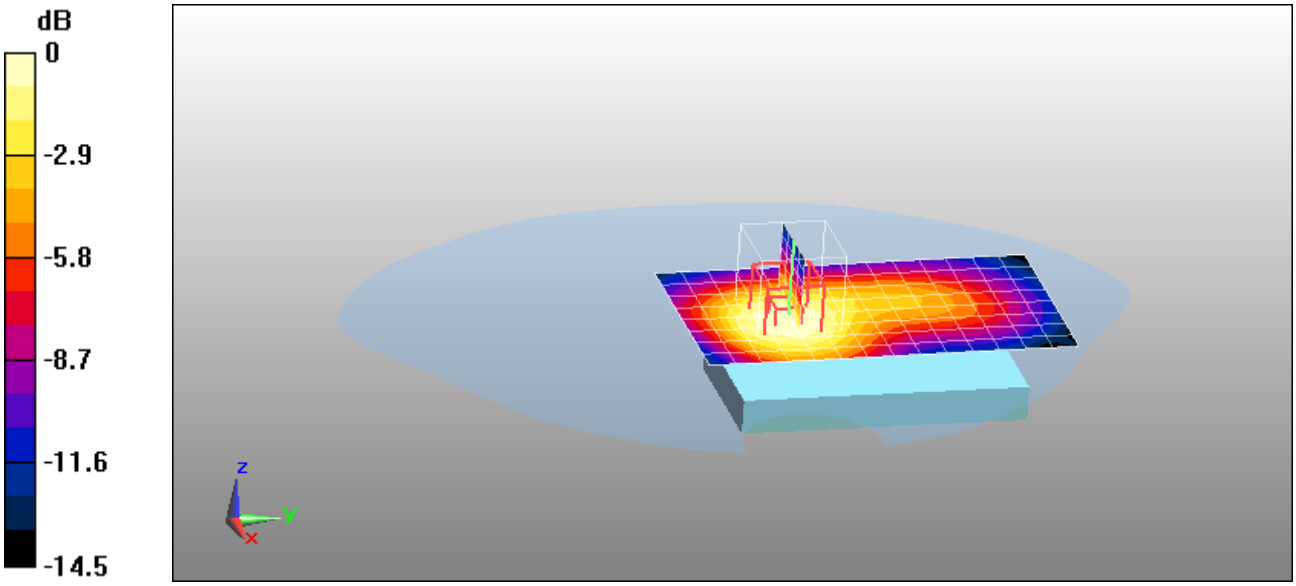

0 dB = 0.238mW/g

Date/Time: 13-Mar-2011

Test Laboratory: QuieTek Lab

GPRS 1900 Mid Body-Back(4up)

DUT: Mobile Phone ; Type: PT-7

Communication System: GPRS/EGPRS-4 Slot; Communication System Band: PCS1900; Duty Cycle: 1:1.0; Frequency: 1880 MHz; Medium parameters used: f = 1880 MHz; σ = 1.53 mho/m; εr = 53.1; ρ = 1000 kg/m3 ;

Phantom section: Flat Section

Ambient temperature (℃): 21.5, Liquid temperature (℃): 21.0

DASY5 Configuration:

- Probe: EX3DV4 - SN3710; ConvF(4.193, 4.677, 4.833); Calibrated: 2011/2/25
- Sensor-Surface: 4mm (Mechanical Surface Detection)
- Electronics: DAE4 Sn1220; Calibrated: 2010/12/3
- Phantom: SAM2; Type: SAM; Serial: TP1562
- Measurement SW: DASY5, V5.2 Build 162; SEMCAD X Version 14.0 Build 59

Configuration/GPRS 1900 Mid Body-Back/Area Scan (9x15x1): Measurement grid: dx=10mm, dy=10mm

Maximum value of SAR (measured) = 0.266 mW/g

Configuration/GPRS 1900 Mid Body-Back/Zoom Scan (5x5x7)/Cube 0: Measurement grid: dx=8mm, dy=8mm, dz=5mm, Reference Value = 12 V/m; Power Drift = -0.179 dB

Peak SAR (extrapolated) = 0.416 W/kg

SAR(1 g) = 0.258 mW/g; SAR(10 g) = 0.159 mW/g Maximum value of SAR (measured) = 0.278 mW/g

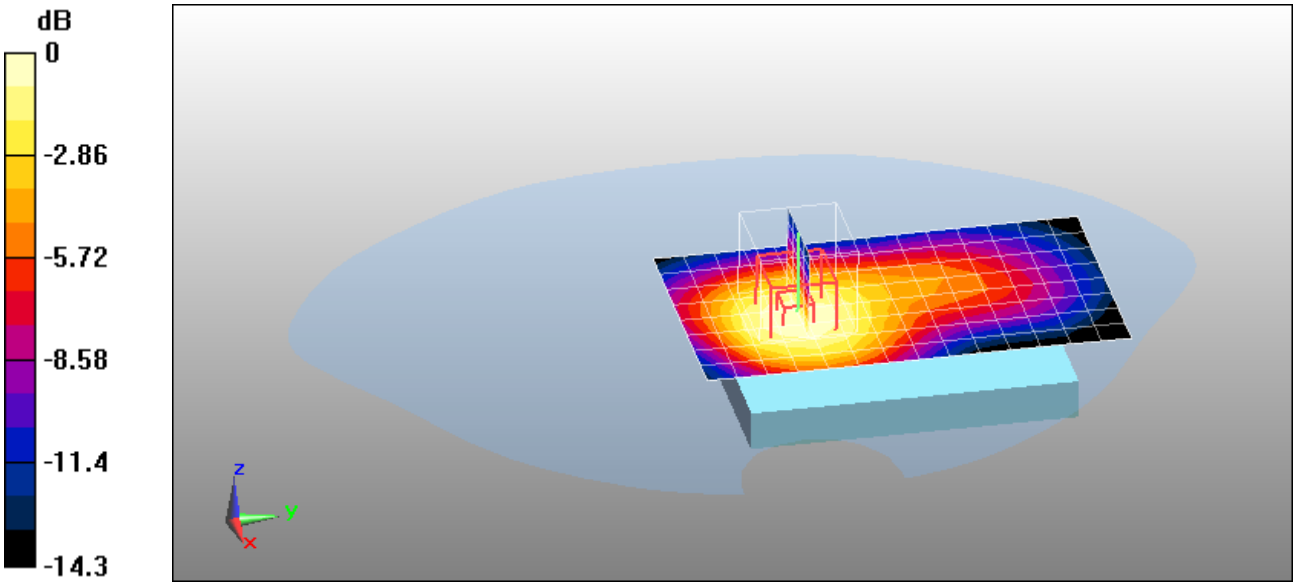

0 dB = 0.278mW/g

Date/Time: 13-Mar-2011

Test Laboratory: QuieTek Lab

GPRS 1900 High Body-Back(4up)

DUT: Mobile Phone ; Type: PT-7

Communication System: GPRS/EGPRS-4 Slot; Communication System Band: PCS1900; Duty Cycle: 1:1.0; Frequency: 1909.8 MHz; Medium parameters used: f = 1909.8 MHz; σ = 1.56 mho/m; εr = 53; ρ = 1000 kg/m3 ; Phantom section: Flat Section

Ambient temperature (℃): 21.5, Liquid temperature (℃): 21.0

DASY5 Configuration:

- Probe: EX3DV4 - SN3710; ConvF(4.193, 4.677, 4.833); Calibrated: 2011/2/25
- Sensor-Surface: 4mm (Mechanical Surface Detection)
- Electronics: DAE4 Sn1220; Calibrated: 2010/12/3
- Phantom: SAM2; Type: SAM; Serial: TP1562
- Measurement SW: DASY5, V5.2 Build 162; SEMCAD X Version 14.0 Build 59

Configuration/GPRS 1900 High Body-Back/Area Scan (9x15x1): Measurement grid: dx=10mm, dy=10mm

Maximum value of SAR (measured) = 0.215 mW/g

Configuration/GPRS 1900 High Body-Back/Zoom Scan (5x5x7)/Cube 0: Measurement grid: dx=8mm, dy=8mm, dz=5mm, Reference Value = 10.7 V/m; Power Drift = 0.074 dB

Peak SAR (extrapolated) = 0.359 W/kg

SAR(1 g) = 0.222 mW/g; SAR(10 g) = 0.138 mW/g Maximum value of SAR (measured) = 0.237 mW/g

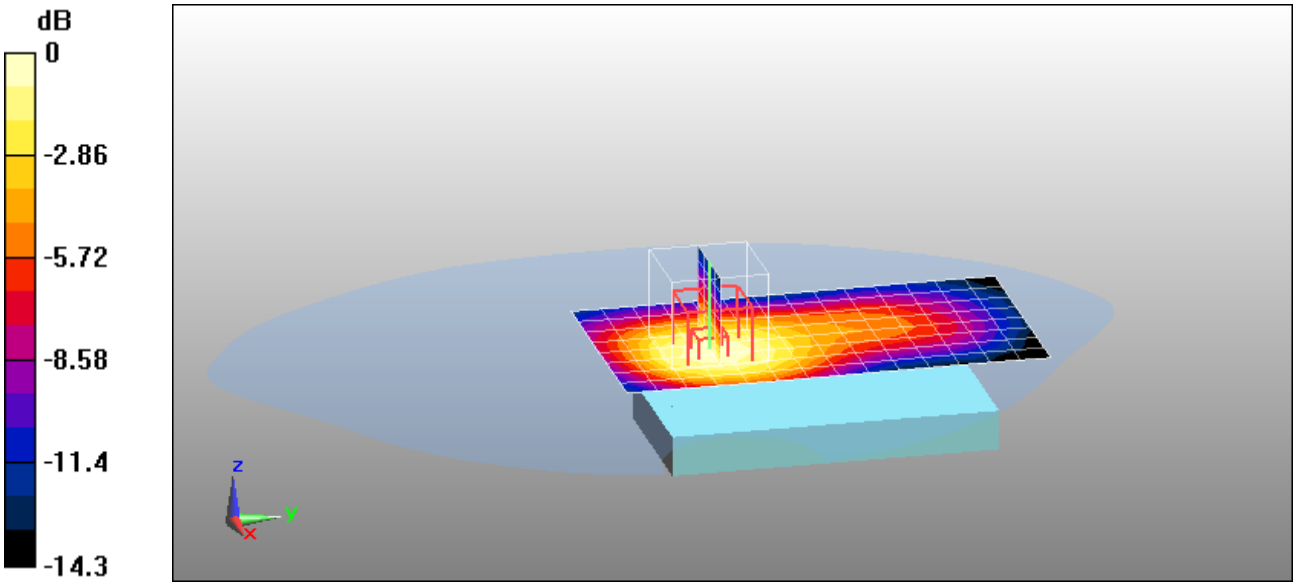

0 dB = 0.237mW/g

Date/Time: 13-Mar-2011

Test Laboratory: QuieTek Lab

GPRS 1900 Mid Body-Front(4up)

DUT: Mobile Phone ; Type: PT-7

Communication System: GPRS/EGPRS-4 Slot; Communication System Band: PCS1900; Duty Cycle: 1:1.0; Frequency: 1880 MHz; Medium parameters used: f = 1880 MHz; σ = 1.53 mho/m; εr = 53.1; ρ = 1000 kg/m3 ;

Phantom section: Flat Section

Ambient temperature (℃): 21.5, Liquid temperature (℃): 21.0

DASY5 Configuration:

- Probe: EX3DV4 - SN3710; ConvF(4.193, 4.677, 4.833); Calibrated: 2011/2/25
- Sensor-Surface: 4mm (Mechanical Surface Detection)
- Electronics: DAE4 Sn1220; Calibrated: 2010/12/3
- Phantom: SAM2; Type: SAM; Serial: TP1562
- Measurement SW: DASY5, V5.2 Build 162; SEMCAD X Version 14.0 Build 59

Configuration/GPRS 1900 Mid Body-Front/Area Scan (9x15x1): Measurement grid: dx=10mm, dy=10mm

Maximum value of SAR (measured) = 0.173 mW/g

Configuration/GPRS 1900 Mid Body-Front/Zoom Scan (5x5x7)/Cube 0: Measurement grid: dx=8mm, dy=8mm, dz=5mm, Reference Value = 9.1 V/m; Power Drift = 0.056 dB

Peak SAR (extrapolated) = 0.269 W/kg

SAR(1 g) = 0.163 mW/g; SAR(10 g) = 0.095 mW/g Maximum value of SAR (measured) = 0.177 mW/g

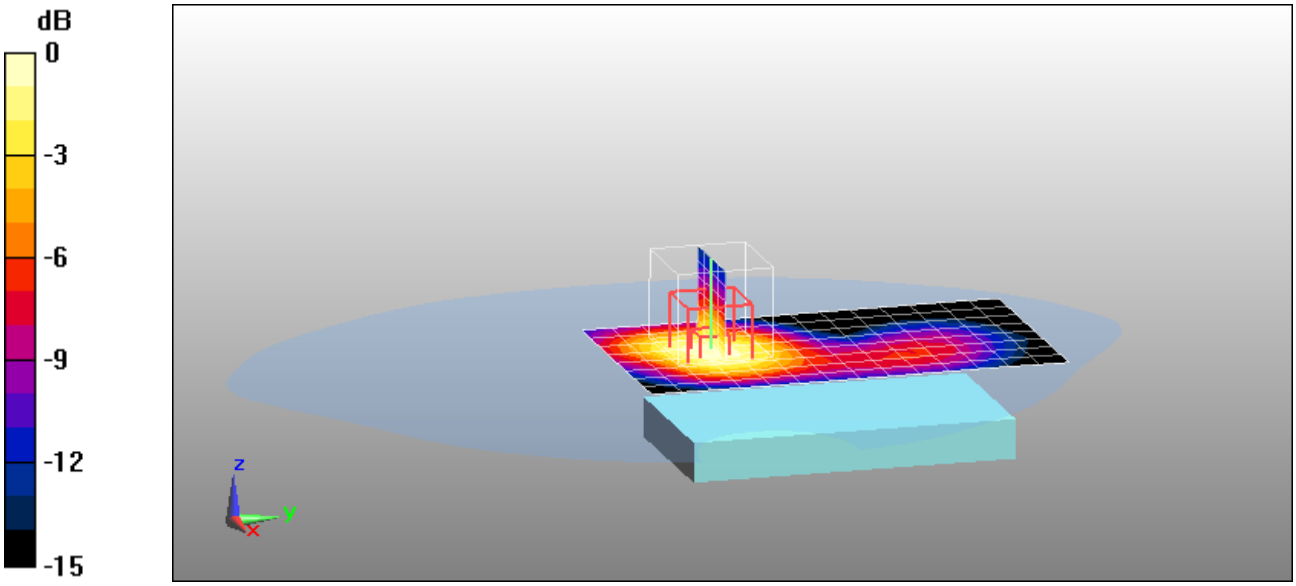

0 dB = 0.177mW/g

Date/Time: 13-Mar-2011

Test Laboratory: QuieTek Lab

GPRS 1900 Mid Body-Back(4up) (With Headset)

DUT: Mobile Phone ; Type: PT-7

Communication System: GPRS/EGPRS-4 Slot; Communication System Band: PCS1900; Duty Cycle: 1:1.0; Frequency: 1880 MHz; Medium parameters used: f = 1880 MHz; σ = 1.53 mho/m; εr = 53.1; ρ = 1000 kg/m3 ;

Phantom section: Flat Section

Ambient temperature (℃): 21.5, Liquid temperature (℃): 21.0

DASY5 Configuration:

- Probe: EX3DV4 - SN3710; ConvF(4.193, 4.677, 4.833); Calibrated: 2011/2/25
- Sensor-Surface: 4mm (Mechanical Surface Detection)
- Electronics: DAE4 Sn1220; Calibrated: 2010/12/3
- Phantom: SAM2; Type: SAM; Serial: TP1562
- Measurement SW: DASY5, V5.2 Build 162; SEMCAD X Version 14.0 Build 59

Configuration/GPRS 1900 Mid Body-Back/Area Scan (9x15x1): Measurement grid: dx=10mm, dy=10mm

Maximum value of SAR (measured) = 0.191 mW/g

Configuration/GPRS 1900 Mid Body-Back/Zoom Scan (5x5x7)/Cube 0: Measurement grid: dx=8mm, dy=8mm, dz=5mm, Reference Value = 5.39 V/m; Power Drift = 0.020 dB

Peak SAR (extrapolated) = 0.296 W/kg

SAR(1 g) = 0.179 mW/g; SAR(10 g) = 0.110 mW/g Maximum value of SAR (measured) = 0.191 mW/g

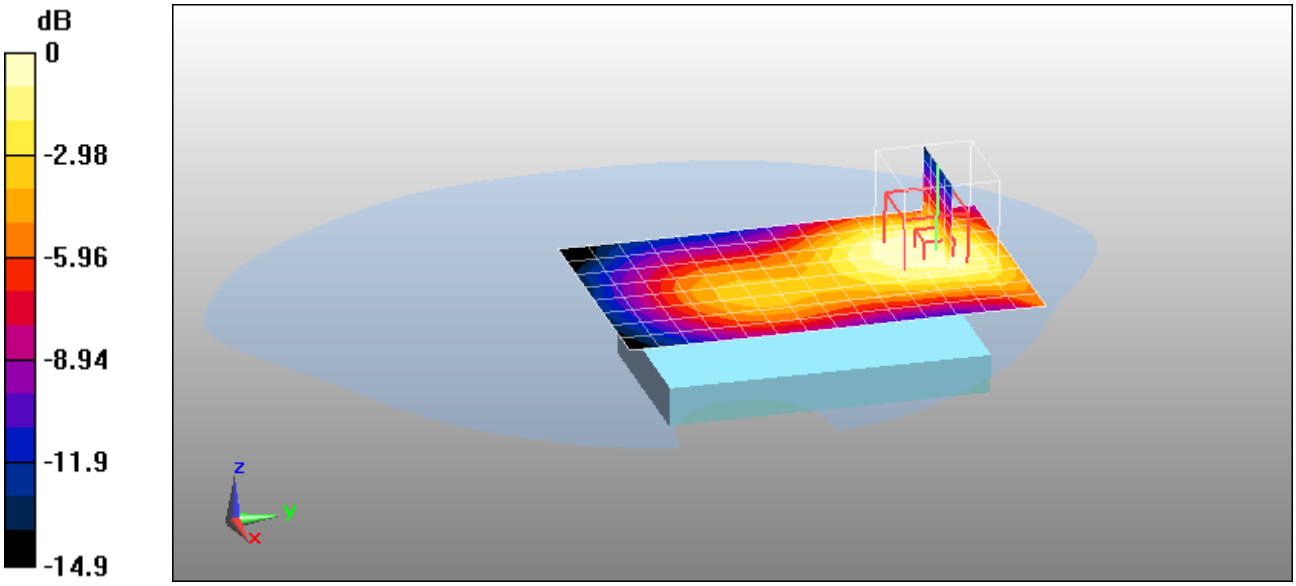

0 dB = 0.191mW/g

Date/Time: 13-Mar-2011

Test Laboratory: QuieTek Lab

PCS 1900 Mid Left-Touch <SIM 2>

DUT: Mobile Phone ; Type: PT-7

Communication System: Generic GSM; Communication System Band: PCS 1900 (1850.0 - 1910.0 MHz); Duty Cycle: 1:8.3; Frequency: 1880 MHz; Medium parameters used: f = 1880 MHz; σ = 1.43 mho/m; εr = 39.2; ρ = 1000 kg/m3 ; Phantom section: Left Section

Ambient temperature (℃): 21.5, Liquid temperature (℃): 21.0

DASY5 Configuration:

- Probe: EX3DV4 - SN3710; ConvF(3.609, 4.015, 4.146); Calibrated: 2011/2/25
- Sensor-Surface: 4mm (Mechanical Surface Detection)
- Electronics: DAE4 Sn1220; Calibrated: 2010/12/3
- Phantom: SAM1; Type: SAM; Serial: TP1561
- Measurement SW: DASY5, V5.2 Build 162; SEMCAD X Version 14.0 Build 59

Configuration/PCS 1900 Mid Left-Touch/Area Scan (9x15x1): Measurement grid: dx=10mm, dy=10mm

Maximum value of SAR (measured) = 0.349 mW/g

Configuration/PCS 1900 Mid Left-Touch/Zoom Scan (5x5x7)/Cube 0: Measurement grid: dx=8mm, dy=8mm, dz=5mm, Reference Value = 9.58 V/m; Power Drift = -0.025 dB

Peak SAR (extrapolated) = 0.613 W/kg

SAR(1 g) = 0.302 mW/g; SAR(10 g) = 0.153 mW/g Maximum value of SAR (measured) = 0.343 mW/g

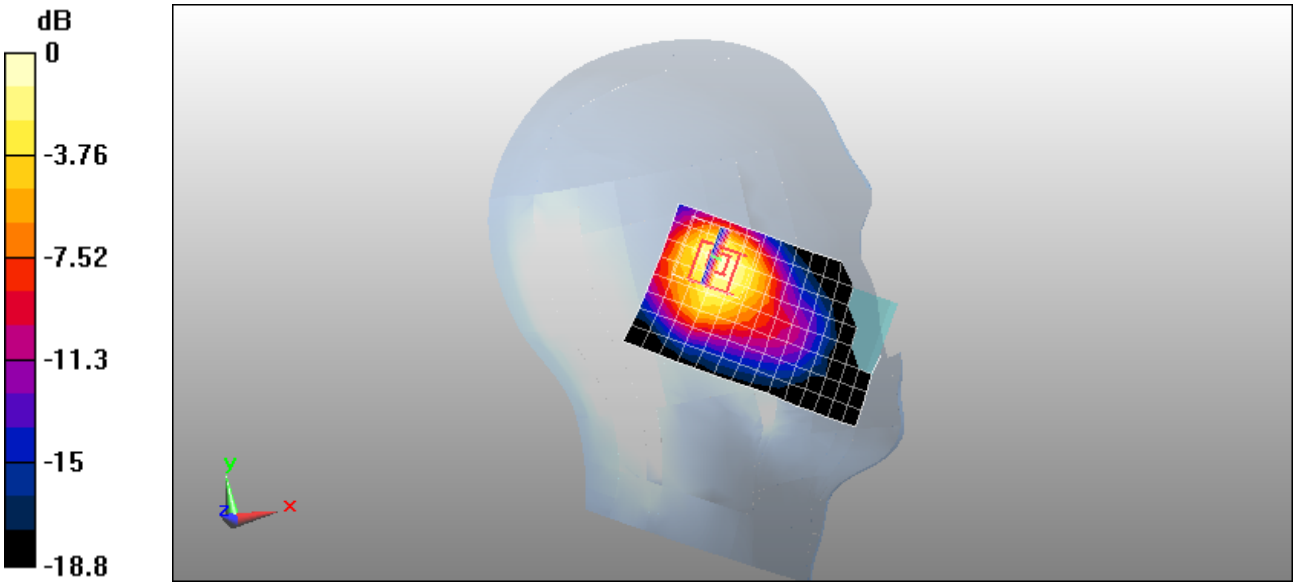

0 dB = 0.343mW/g

Appendix C. Test Setup Photographs & EUT Photographs

Test Setup Photographs

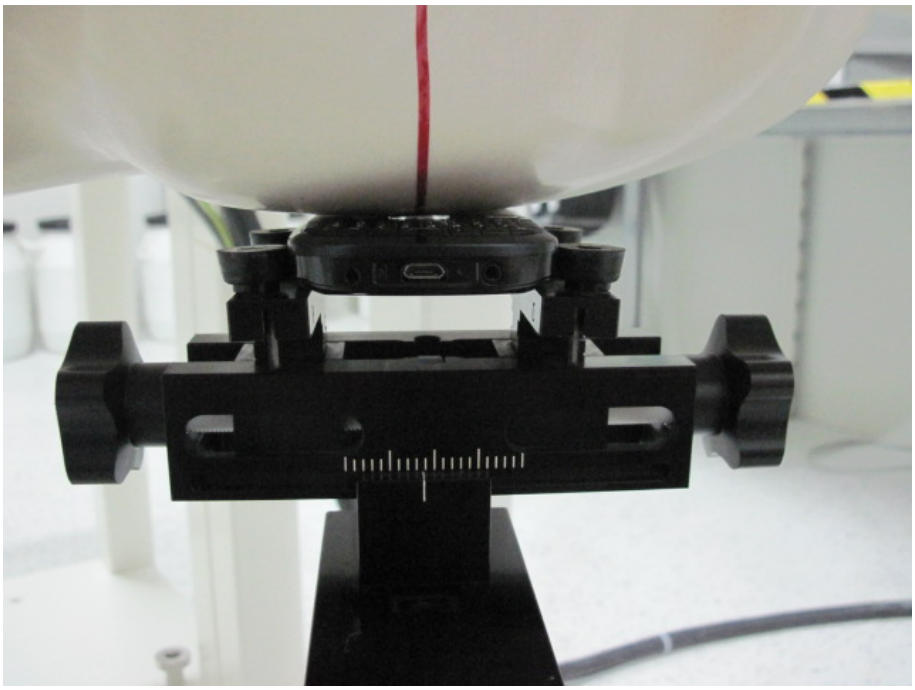

Left-Cheek Touch

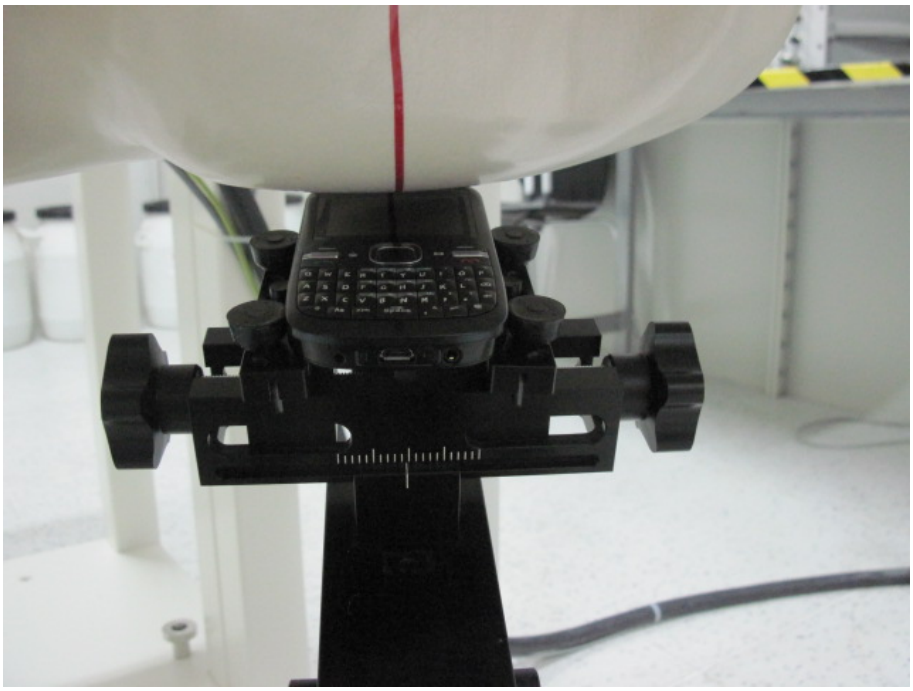

Left-Tilt 15°

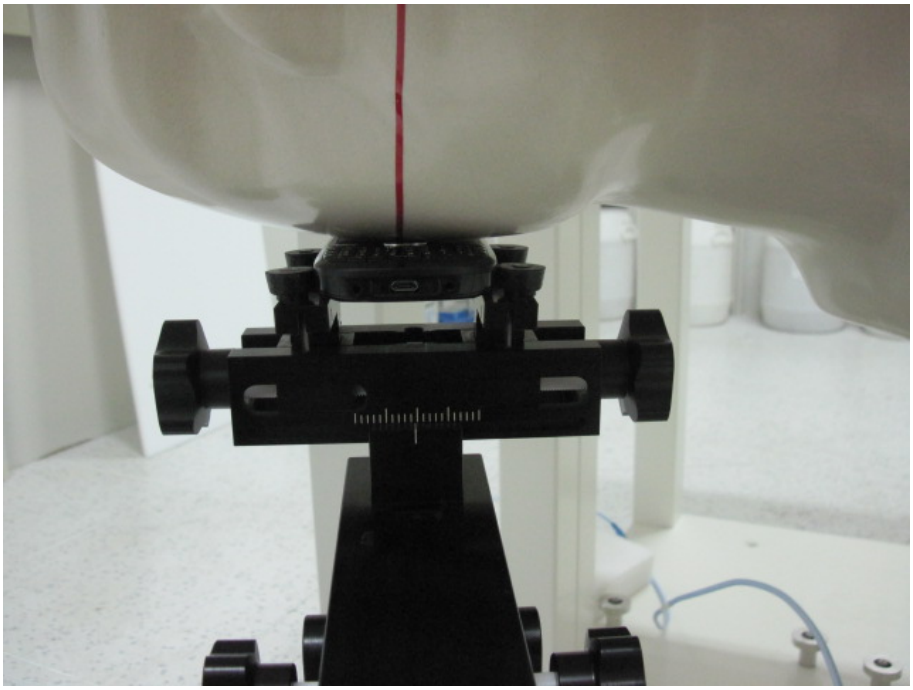

Right-Cheek Touch

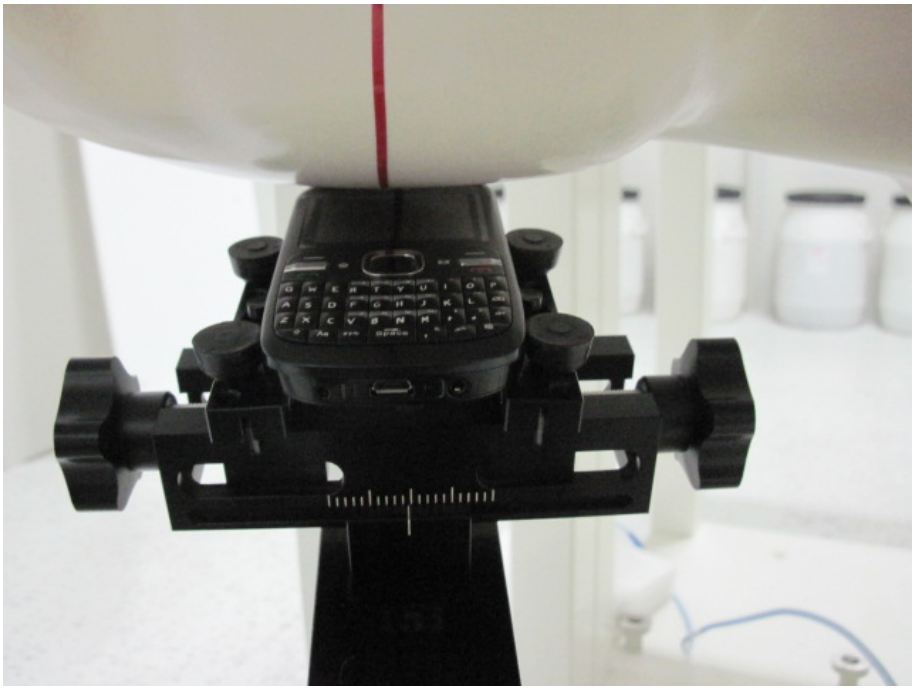

Right-Tilt 15°

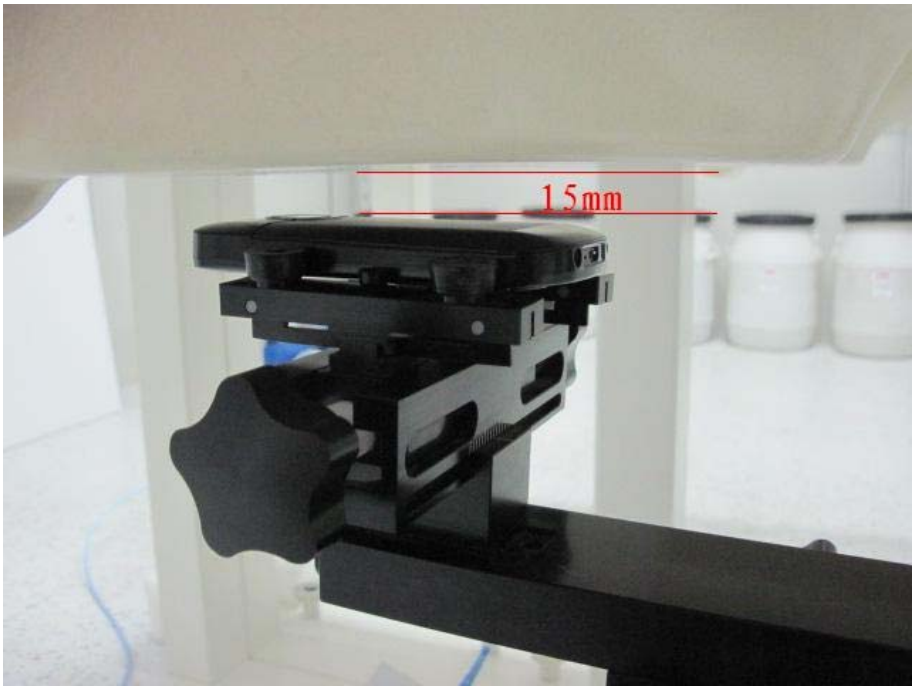

Body SAR back 15mm

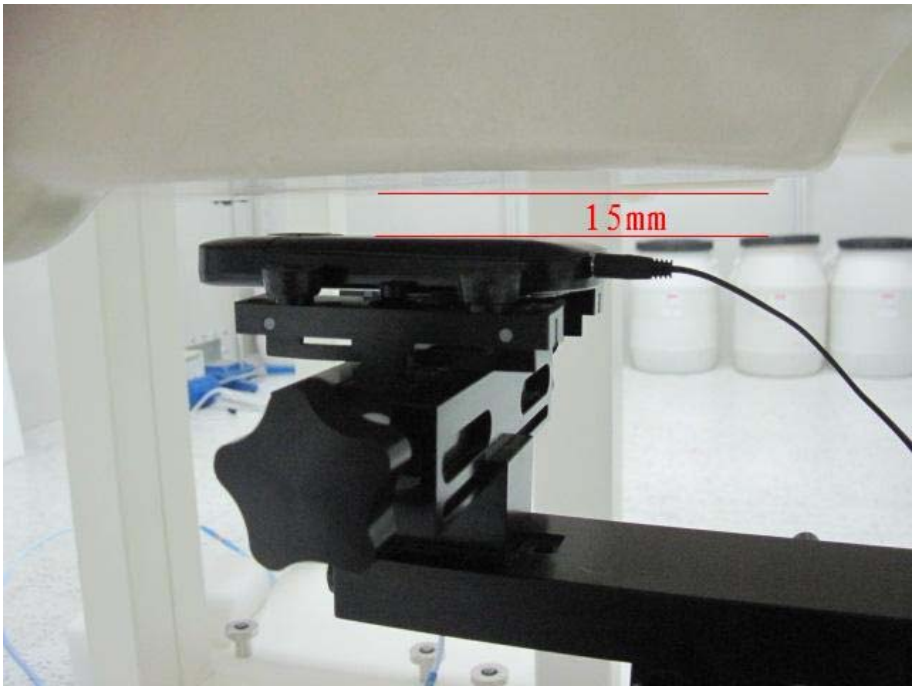

Body SAR Back 15mm with Headset

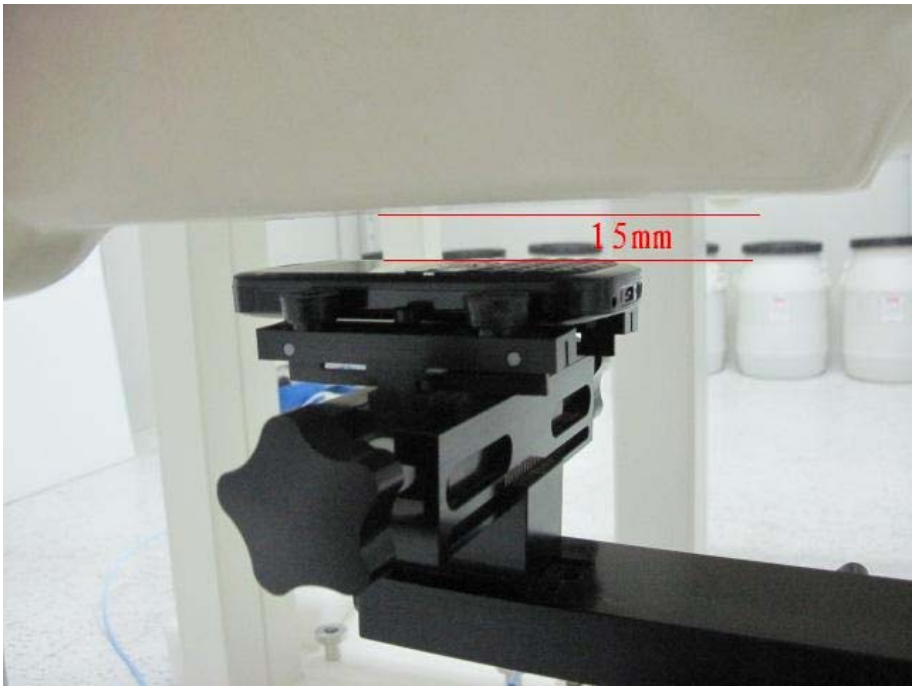

Body SAR Front 15mm

Depth of the liquid in the phantom – Zoom in

Note: The position used in the measurements were according to IEEE 1528 - 2003

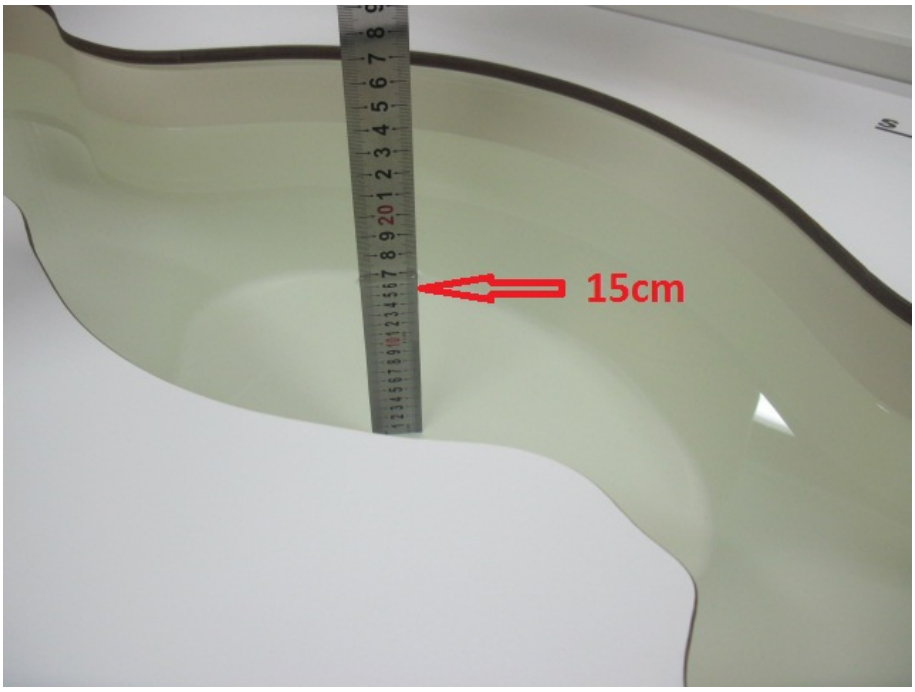

EUT Photographs

Appendix D. Probe Calibration Data

国家无线电监测中心检测中心

The State Radio_monitoring_center Testing Center

校准证书

Calibration Certificate

校 准
CNAS L0447

器具名称 Instrument	电场探头 E-Field Probe
型号/规格 Type/Model	EX3DV4
生产厂家 Manufacturer	Schmid & Partner Engineering AG
出厂编号 Serial No	SN:3710
客户名称 Name of Client	快特电波科技（苏州）有限公司
客户地址 Address of Client	苏州工业园区娄葑高新技术开发区宏业路 99 号
校准日期 Calibration Date	2011.2.25

所有的校准工作都是在屏蔽实验室中完成：环境温度 (22±3) ℃ 湿度<70%

All calibrations have been conducted in the closed laboratory facility: environment temperature (22±3) ℃ and humidity<70%

授权签字人：

Approved by

国家无线电监测中心检测中心 校准报告专用章

地址：北京市西城区北礼士路 80 号
Add: No.80 Bei Lishi Road, Xi Cheng District Beijing 100037, P .R .China

电话 Tel：+86-10-68009202 68009203
传真 Fax：+86-10-68009205 68009195

第 1 页 共 7 页 证书编号 Certificate No.SRTC2011-CAL002-001

国家无线电监测中心检测中心
The State Radio_monitoring_center Testing Center

校准规范 Reference documents of the measurement(Code, Name)
SRMC3003-V2.0.0 比吸收率（SAR）测试系统校准规范
校准环境及地点 Place and environmental condition of the measurement
温度 Temperature 23.2℃ 湿度 Humidity 32.5 % 地点 Location SRTC room 226

主要校准设备 Primary Calibration Equipment used	型号 Model/Type	序列号 ID#	校准日期 Cal Date	校准有效期至 Scheduled Calibration
功率计 Power meter	E4417A	SN: MY45101004	2010.8	2011.8
功率传感器 Power sensor	E9300B	SN: MY41496001	2010.8	2011.8
功率传感器 Power sensor	E9300B	SN: MY41496003	2010.8	2011.8
参考 DAE Reference DAE	DAE4	SN: 720	2011.1	2012.1
信号源 Signal generator	SML03	SN:103514	2010.8	2011.8
网络分析仪 Network analyzer	8714ET	SN:US40372083	2010.8	2011.8
次要校准设备 Secondary Calibration Equipment	型号 Model/Type	序列号 ID#		
波导 Waveguide	WGLS R9	SN:1006		
波导 Waveguide	WGLS R14	SN:1003		
波导 Waveguide	WGLS R22	SN:1006		

地址：北京市西城区北礼士路 80 号
Add: No.80 Bei Lishi Road, Xi Cheng District Beijing 100037, P .R .China
电话 Tel：+86-10-68009202 68009203
传真 Fax：+86-10-68009205 68009195

国家无线电监测中心检测中心
The State Radio_monitoring_center Testing Center

注：

1．所使用的校准系统和计量标准可溯源到国家基准或标准。

测量和置信区间的不确定度都是证书的一部分，并将在以下内容中给出。

This calibration certificate documents the traceability to national standards, which realize the physical units of measurements (SI).

The measurements and the uncertainties with confidence probability are given on the following pages and are part of the certificate.

2. 除非拥有本实验室的书面许可，否则不得复制该校准证书。

This calibration certificate shall not be reproduced except in full without written approval of the laboratory.

3. 我中心仅对加盖“国家无线电监测中心检验中心”章的完整证书负责

SRTC is responsible for the whole of certificate only with stamp of SRTC.

4. 本证书的校准结果仅对所校准的计量器具有效

The calibration results would be valid only for the items calibration.

5. 本证书中英文两种语言表达，准确含义以中文为准。

The certification is written by Chinese and English. Exact meaning should be explained only on Chinese version.

地址：北京市西城区北礼士路 80 号
Add: No.80 Bei Lishi Road, Xi Cheng District Beijing 100037, P .R .China
电话 Tel：+86-10-68009202 68009203
传真 Fax：+86-10-68009205 68009195

国家无线电监测中心检测中心
The State Radio_monitoring_center Testing Center

备注
Glossary

TSL	模拟组织液 tissue simulating liquid
NORMx, y, z	自由空间灵敏度 sensitivity in free space
ConvF	模拟组织液中的灵敏度/自由空间的灵敏度 sensitivity in TSL/NORM x, y, z
DCP	二极管压缩点 diode compression point
角度 φ	沿探头轴向旋转 φ φ rotation around probe axis
角度 θ	沿探头法平面中的一个轴旋转 θ，例如 θ=0，代表垂直于探头轴向 θ rotation around an axis that is in the plane normal to probe axis (at measurement center), i.e., θ=0 is normal to probe axis

本校准证书中使用的方法参考如下标准
Calibration is preformed according to the Following Standards

a) IEEE Std 1528-2003, "IEEE Recommended Practice for Determining the Peak Spatial-Averaged Specific Absorption Rate (SAR) in Human Head from Wireless Communication Devices: Measurement Techniques", December 2003

b) IEC 62209-1, "Procedure to measure the Specific Absorption Rate (SAR) for hand-held devices used in close proximity to the ear (frequency range of 300MHz to 3GHz) ", February 2005

c) Federal Communication Commission Office of Engineering & Technology (FCC OET), "Evaluating Compliance with FCC Guidelines for Human Exposure to Radiofrequency Electromagnetic Fields; Additional Information for Evaluating Compliance of Mobile and Portable Devices with FCC Limits for Human Exposure to Radiofrequency Emissions", Supplement C (Edition 01-01) to Bulletin 65

地址：北京市西城区北礼士路 80 号
Add: No.80 Bei Lishi Road, Xi Cheng District Beijing 100037, P .R .China
电话 Tel：+86-10-68009202 68009203
传真 Fax：+86-10-68009205 68009195

国家无线电监测中心检测中心
The State Radio_monitoring_center Testing Center

方法及参数介绍
Methods Applied and Interpretation of Parameters

· NORMx, y, z：NORMx, y, z 是中间变量，其不确定度不影响 TSL 中电场强度的不确定性。
NORM x, y, z are only intermediate valve, i.e., the uncertainties of NORM x, y, z does not effect the E^2-field uncertainty inside TSL (see below ConvF)

• NORM(f)x, y, z= NORMx, y, z*频率响应。在 DASY4.2 以后的版本中，这项工作由软件完成，频率响应的不确定度包含在 ConvF 的不确定度中。
NORM(f) x, y, z= NORM x, y, z*frequency response (see Frequency Response Chart). This linearization is implemented in DASY4 software version later than 4.2. The uncertainty of the frequency response is included in the stated uncertainty of ConvF.

• DCPx,y,z: DCP 是与探头的线性度相关的参数，其测试是基于功率扫描的方法进行的，另外 DCP 既不依赖于频率也不依赖于介质。
DCP x, y, z: DCP are numerical linearization parameters assessed based on the data of power sweep (no uncertainty required). DCP does not depend on frequency nor media.

• ConvF 和边界效应：当频率大于 800MHz 时，利用平坦模型中的电场或是波导中的人工电场进行测试。我们也利用相同的配置来得到边界效应的相关参数（alpha, depth）。DASY 软件的这项功能可以用来补偿测试中发生的边界效应，使在边界附近测试的时候能够更加准确。而 ConvFx,y,z=NORMx, y, z*ConvF。DASY4.4 以后的版本允许的频率扩展范围为±50MHz 到±100MHz。
ConvF and Boundary Effect Parameters: Assessed in flat phantom using E-field (or Temperature Transfer Stand for f≤800MHz) and inside waveguide using analytical field distributions based on power measurement for f>800MHz .The same setups are used for assessment of the parameters applied for boundary compensation (alpha, depth) of which typical uncertainty values are given .These parameters are used in DASY4 software to improve probe accuracy close to the boundary. The sensitivity in TSL corresponds to that given for ConvF. A frequency dependent ConvF is used in DASY version 4.4 and higher which allows extending the validity from ±50MHz to ±100 MHz.

• 各向同向性：探头暴露在平板天线和一个平面模型产生的电场中，这个电场的梯度较低。
Spherical isotropy (3D deviation from isotropy): in a field of low gradients realized using a flat phantom exposed by a patch antenna.

地址：北京市西城区北礼士路 80 号
Add: No.80 Bei Lishi Road, Xi Cheng District Beijing 100037, P .R .China
电话 Tel：+86-10-68009202 68009203
传真 Fax：+86-10-68009205 68009195

国家无线电监测中心检测中心
The State Radio_monitoring_center Testing Center

测试条件

Measurement Conditions

DASY 版本 DASY Version	DSAY 5	V52.2.0.163
模型 Phantom	Flat phantom	———

探头敏感度参数

Probe Sensitivity Parameters

	数值 Value	单位 Unit
X 轴	1.00	$\mu V/(V/m)^2$
Y 轴	1.00	$\mu V/(V/m)^2$
Z 轴	1.00	$\mu V/(V/m)^2$

1. 二极管压缩点

Diode Compression Point

	数值 Value	单位 Unit	不确定度 Uncertainty ($k=2$)
X 轴	98.60	mV	10.82%
Y 轴	97.38	mV	10.82%
Z 轴	99.74	mV	10.82%

2. 转换因子：头部 TSL

Probe Conversion Factors: Head Tissue Liquid

频率(MHz) Frequency	频率范围 Validity (MHz)	介电常数 Permittivit	导电率 Conductivity	Alpha	Depth	ConvFx/ ConvFy/ ConvFz $\mu V/(V/m)^2$			不确定度 Uncertainty ($k=2$)
850	±100	41.56	0.9106	0.395	0.882	3.843	4.303	4.435	13.02%
900	±100	41.24	0.9487	0.337	0.974	3.913	4.377	4.502	13.02%
1800	±100	39.21	1.348	0.156	1.648	3.784	4.193	4.328	13.02%
1900	±100	38.75	1.450	0.178	1.515	3.609	4.015	4.146	13.02%
2450	±100	38.23	1.982	0.126	1.725	3.214	3.653	3.661	13.02%

地址：北京市西城区北礼士路 80 号
Add: No.80 Bei Lishi Road, Xi Cheng District Beijing 100037, P .R .China
电话 Tel：+86-10-68009202 68009203
传真 Fax：+86-10-68009205 68009195

国家无线电监测中心检测中心
The State Radio_monitoring_center Testing Center

3. 转换因子：腰部 TSL

Probe Conversion Factors: Body Tissue Liquid

频率(MHz) Frequency	频率范围 Validity (MHz)	介电常数 Permittivit	导电率 Conductivity	Alpha	Depth	ConvFx/ ConvFy/ ConvFz $\mu V/(V/m)^2$			不确定度 Uncertainty ($k=2$)
850	±100	55.36	1.004	0.459	0.807	4.438	4.985	5.123	13.02%
900	±100	54.48	1.055	0.378	0.863	4.530	5.101	5.229	13.02%
1800	±100	52.83	1.501	0.152	1.732	4.333	4.832	4.991	13.02%
1900	±100	52.43	1.615	0.183	1.491	4.193	4.677	4.833	13.02%
2450	±100	52.95	1.911	0.137	1.758	3.702	4.126	4.265	13.02%

4. 各向同向性

Probe Isotropy

	数值 Value	单位 Unit	不确定度 Uncertainty ($k=2$)
轴向各向同向性 Axial Isotropy	0.157	dB	10.18%
球面各向同向性 Spherical Isotropy	0.125	dB	10.18%

校准员 Calibrated by 张阳远　　核验员 Checked by 刘阳

地址：北京市西城区北礼士路 80 号
Add: No.80 Bei Lishi Road, Xi Cheng District Beijing 100037, P .R .China
电话 Tel：+86-10-68009202　68009203
传真 Fax：+86-10-68009205　68009195

Appendix E. Dipole Calibration Data

Calibration Laboratory of
Schmid & Partner
Engineering AG
Zeughausstrasse 43, 8004 Zurich, Switzerland

S Schweizerischer Kalibrierdienst
C Service suisse d'étalonnage
Servizio svizzero di taratura
S Swiss Calibration Service

Accredited by the Swiss Accreditation Service (SAS)
The Swiss Accreditation Service is one of the signatories to the EA Multilateral Agreement for the recognition of calibration certificates

Accreditation No.: SCS 108

Client **Quietek (Auden)**

Certificate No: D835V2-4d094_Mar10

CALIBRATION CERTIFICATE

Object	D835V2 - SN: 4d094
Calibration procedure(s)	QA CAL-05.v7 Calibration procedure for dipole validation kits
Calibration date:	March 15, 2010

This calibration certificate documents the traceability to national standards, which realize the physical units of measurements (SI).
The measurements and the uncertainties with confidence probability are given on the following pages and are part of the certificate.

All calibrations have been conducted in the closed laboratory facility: environment temperature (22 ± 3)°C and humidity < 70%.

Calibration Equipment used (M&TE critical for calibration)

Primary Standards	ID #	Cal Date (Certificate No.)	Scheduled Calibration
Power meter EPM-442A	GB37480704	06-Oct-09 (No. 217-01086)	Oct-10
Power sensor HP 8481A	US37292783	06-Oct-09 (No. 217-01086)	Oct-10
Reference 20 dB Attenuator	SN: 5086 (20g)	31-Mar-09 (No. 217-01025)	Mar-10
Type-N mismatch combination	SN: 5047.2 / 06327	31-Mar-09 (No. 217-01029)	Mar-10
Reference Probe ES3DV3	SN: 3205	26-Jun-09 (No. ES3-3205_Jun09)	Jun-10
DAE4	SN: 601	02-Mar-10 (No. DAE4-601_Mar10)	Mar-11

Secondary Standards	ID #	Check Date (in house)	Scheduled Check
Power sensor HP 8481A	MY41092317	18-Oct-02 (in house check Oct-09)	In house check: Oct-11
RF generator R&S SMT-06	100005	4-Aug-99 (in house check Oct-09)	In house check: Oct-11
Network Analyzer HP 8753E	US37390585 S4206	18-Oct-01 (in house check Oct-09)	In house check: Oct-10

	Name	Function	Signature
Calibrated by:	Dimce Iliev	Laboratory Technician	D. Iliev
Approved by:	Katja Pokovic	Technical Manager	

Issued: March 15, 2010

This calibration certificate shall not be reproduced except in full without written approval of the laboratory.

Certificate No: D835V2-4d094_Mar10 Page 1 of 9

Calibration Laboratory of
Schmid & Partner
Engineering AG
Zeughausstrasse 43, 8004 Zurich, Switzerland

S Schweizerischer Kalibrierdienst
C Service suisse d'étalonnage
Servizio svizzero di taratura
S Swiss Calibration Service

Accredited by the Swiss Accreditation Service (SAS)
The Swiss Accreditation Service is one of the signatories to the EA Multilateral Agreement for the recognition of calibration certificates

Accreditation No.: SCS 108

Glossary:

TSL	tissue simulating liquid
ConvF	sensitivity in TSL / NORM x,y,z
N/A	not applicable or not measured

Calibration is Performed According to the Following Standards:

a) IEEE Std 1528-2003, "IEEE Recommended Practice for Determining the Peak Spatial-Averaged Specific Absorption Rate (SAR) in the Human Head from Wireless Communications Devices: Measurement Techniques", December 2003
b) IEC 62209-1, "Procedure to measure the Specific Absorption Rate (SAR) for hand-held devices used in close proximity to the ear (frequency range of 300 MHz to 3 GHz)", February 2005
c) Federal Communications Commission Office of Engineering & Technology (FCC OET), "Evaluating Compliance with FCC Guidelines for Human Exposure to Radiofrequency Electromagnetic Fields; Additional Information for Evaluating Compliance of Mobile and Portable Devices with FCC Limits for Human Exposure to Radiofrequency Emissions", Supplement C (Edition 01-01) to Bulletin 65

Additional Documentation:

d) DASY4/5 System Handbook

Methods Applied and Interpretation of Parameters:

- *Measurement Conditions:* Further details are available from the Validation Report at the end of the certificate. All figures stated in the certificate are valid at the frequency indicated.
- *Antenna Parameters with TSL:* The dipole is mounted with the spacer to position its feed point exactly below the center marking of the flat phantom section, with the arms oriented parallel to the body axis.
- *Feed Point Impedance and Return Loss:* These parameters are measured with the dipole positioned under the liquid filled phantom. The impedance stated is transformed from the measurement at the SMA connector to the feed point. The Return Loss ensures low reflected power. No uncertainty required.
- *Electrical Delay:* One-way delay between the SMA connector and the antenna feed point. No uncertainty required.
- *SAR measured:* SAR measured at the stated antenna input power.
- *SAR normalized:* SAR as measured, normalized to an input power of 1 W at the antenna connector.
- *SAR for nominal TSL parameters:* The measured TSL parameters are used to calculate the nominal SAR result.

Measurement Conditions

DASY system configuration, as far as not given on page 1.

DASY Version	DASY5	V5.2
Extrapolation	Advanced Extrapolation	
Phantom	Modular Flat Phantom V4.9	
Distance Dipole Center - TSL	15 mm	with Spacer
Zoom Scan Resolution	dx, dy, dz = 5 mm	
Frequency	835 MHz ± 1 MHz	

Head TSL parameters

The following parameters and calculations were applied.

	Temperature	**Permittivity**	**Conductivity**
Nominal Head TSL parameters	22.0 °C	41.5	0.90 mho/m
Measured Head TSL parameters	(22.0 ± 0.2) °C	42.9 ± 6 %	0.91 mho/m ± 6 %
Head TSL temperature during test	(21.5 ± 0.2) °C	----	----

SAR result with Head TSL

SAR averaged over 1 cm^3 (1 g) of Head TSL	Condition	
SAR measured	250 mW input power	2.43 mW / g
SAR normalized	normalized to 1W	9.72 mW / g
SAR for nominal Head TSL parameters	normalized to 1W	**9.70 mW /g ± 17.0 % (k=2)**

SAR averaged over 10 cm^3 (10 g) of Head TSL	condition	
SAR measured	250 mW input power	1.58 mW / g
SAR normalized	normalized to 1W	6.32 mW / g
SAR for nominal Head TSL parameters	normalized to 1W	**6.30 mW /g ± 16.5 % (k=2)**

Body TSL parameters

The following parameters and calculations were applied.

	Temperature	Permittivity	Conductivity
Nominal Body TSL parameters	22.0 °C	55.2	0.97 mho/m
Measured Body TSL parameters	(22.0 ± 0.2) °C	55.3 ± 6 %	1.01 mho/m ± 6 %
Body TSL temperature during test	(21.3 ± 0.2) °C	----	----

SAR result with Body TSL

SAR averaged over 1 cm^3 (1 g) of Body TSL	Condition	
SAR measured	250 mW input power	2.55 mW / g
SAR normalized	normalized to 1W	10.2 mW / g
SAR for nominal Body TSL parameters	normalized to 1W	**9.90 mW / g ± 17.0 % (k=2)**

SAR averaged over 10 cm^3 (10 g) of Body TSL	condition	
SAR measured	250 mW input power	1.67 mW / g
SAR normalized	normalized to 1W	6.68 mW / g
SAR for nominal Body TSL parameters	normalized to 1W	**6.53 mW / g ± 16.5 % (k=2)**

Appendix

Antenna Parameters with Head TSL

Impedance, transformed to feed point	52.2 Ω - 2.7 jΩ
Return Loss	- 29.4 dB

Antenna Parameters with Body TSL

Impedance, transformed to feed point	48.0 Ω - 4.8 jΩ
Return Loss	- 25.5 dB

General Antenna Parameters and Design

Electrical Delay (one direction)	1.388 ns

After long term use with 100W radiated power, only a slight warming of the dipole near the feedpoint can be measured.

The dipole is made of standard semirigid coaxial cable. The center conductor of the feeding line is directly connected to the second arm of the dipole. The antenna is therefore short-circuited for DC-signals.
No excessive force must be applied to the dipole arms, because they might bend or the soldered connections near the feedpoint may be damaged.

Additional EUT Data

Manufactured by	SPEAG
Manufactured on	September 15, 2009

DASY5 Validation Report for Head TSL

Date/Time: 08.03.2010 10:52:27

Test Laboratory: SPEAG, Zurich, Switzerland

DUT: Dipole 835 MHz; Type: D835V2; Serial: D835V2 - SN:4d094

Communication System: CW; Frequency: 835 MHz; Duty Cycle: 1:1
Medium: HSL900
Medium parameters used: f = 835 MHz; σ = 0.91 mho/m; ε_r = 42.7; ρ = 1000 kg/m^3
Phantom section: Flat Section
Measurement Standard: DASY5 (IEEE/IEC/ANSI C63.19-2007)

DASY5 Configuration:

- Probe: ES3DV3 - SN3205; ConvF(6.04, 6.04, 6.04); Calibrated: 26.06.2009
- Sensor-Surface: 3mm (Mechanical Surface Detection)
- Electronics: DAE4 Sn601; Calibrated: 02.03.2010
- Phantom: Flat Phantom 4.9L; Type: QD000P49AA; Serial: 1001
- Measurement SW: DASY5, V5.2 Build 157; SEMCAD X Version 14.0 Build 57

Pin=250 mW /d=15mm, dist=3.0mm (ES-Probe)/Zoom Scan (7x7x7) /Cube 0: Measurement grid: dx=5mm, dy=5mm, dz=5mm
Reference Value = 57.3 V/m; Power Drift = 0.00297 dB
Peak SAR (extrapolated) = 3.65 W/kg
SAR(1 g) = 2.43 mW/g; SAR(10 g) = 1.58 mW/g
Maximum value of SAR (measured) = 2.84 mW/g

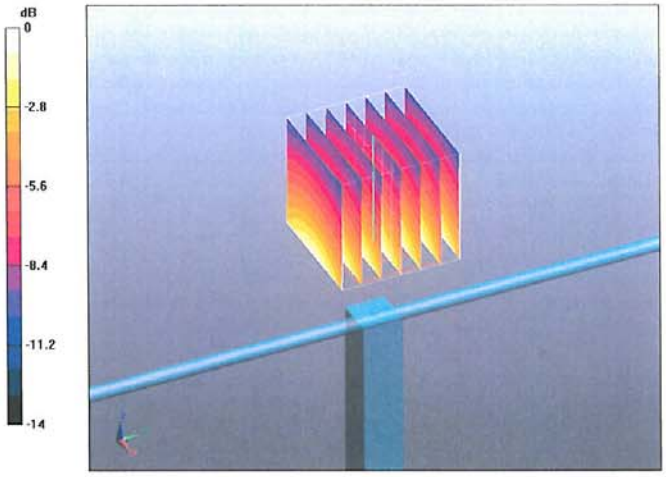

0 dB = 2.84mW/g

Impedance Measurement Plot for Head TSL

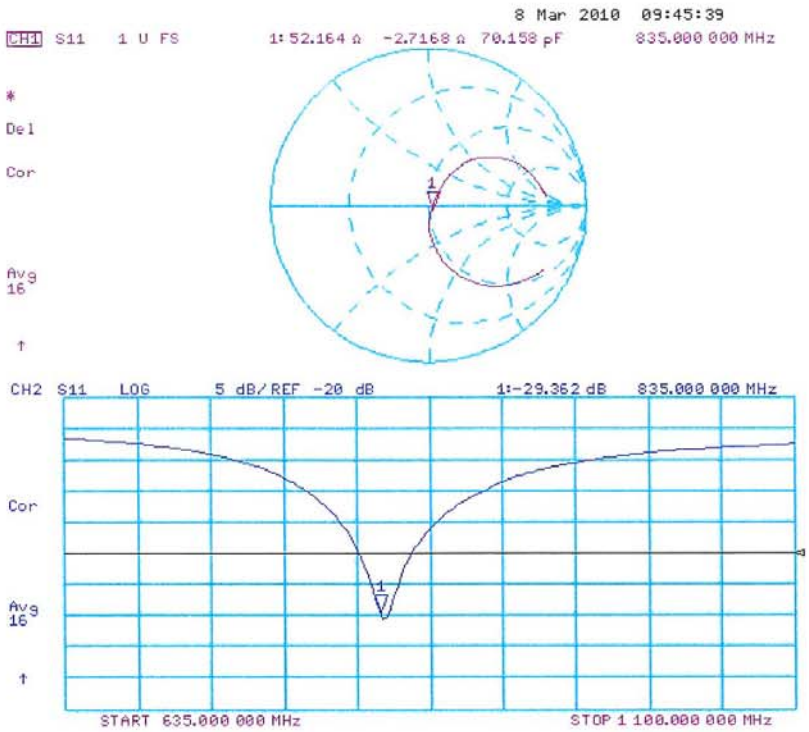

DASY5 Validation Report for Body

Date/Time: 15.03.2010 11:52:53

Test Laboratory: SPEAG, Zurich, Switzerland

DUT: Dipole 835 MHz; Type: D835V2; Serial: D835V2 - SN:4d094

Communication System: CW; Frequency: 835 MHz; Duty Cycle: 1:1
Medium: MSL900
Medium parameters used: f = 835 MHz; σ = 1.01 mho/m; ε_r = 55.3; ρ = 1000 kg/m^3
Phantom section: Flat Section
Measurement Standard: DASY5 (IEEE/IEC/ANSI C63.19-2007)

DASY5 Configuration:

- Probe: ES3DV3 - SN3205; ConvF(5.97, 5.97, 5.97); Calibrated: 26.06.2009
- Sensor-Surface: 3mm (Mechanical Surface Detection)
- Electronics: DAE4 Sn601; Calibrated: 02.03.2010
- Phantom: Flat Phantom 4.9L; Type: QD000P49AA; Serial: 1001
- Measurement SW: DASY5, V5.2 Build 157; SEMCAD X Version 14.0 Build 57

Pin250 mW /d=15mm, dist=3.0mm (ES-Probe)/Zoom Scan (7x7x7) /Cube 0: Measurement grid: dx=5mm, dy=5mm, dz=5mm
Reference Value = 55.9 V/m; Power Drift = -0.00975 dB
Peak SAR (extrapolated) = 3.77 W/kg
SAR(1 g) = 2.55 mW/g; SAR(10 g) = 1.67 mW/g
Maximum value of SAR (measured) = 2.98 mW/g

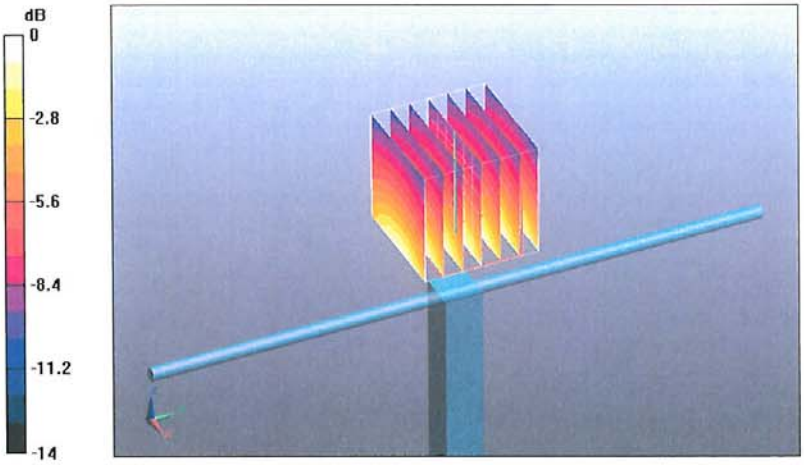

0 dB = 2.98mW/g

Impedance Measurement Plot for Body TSL

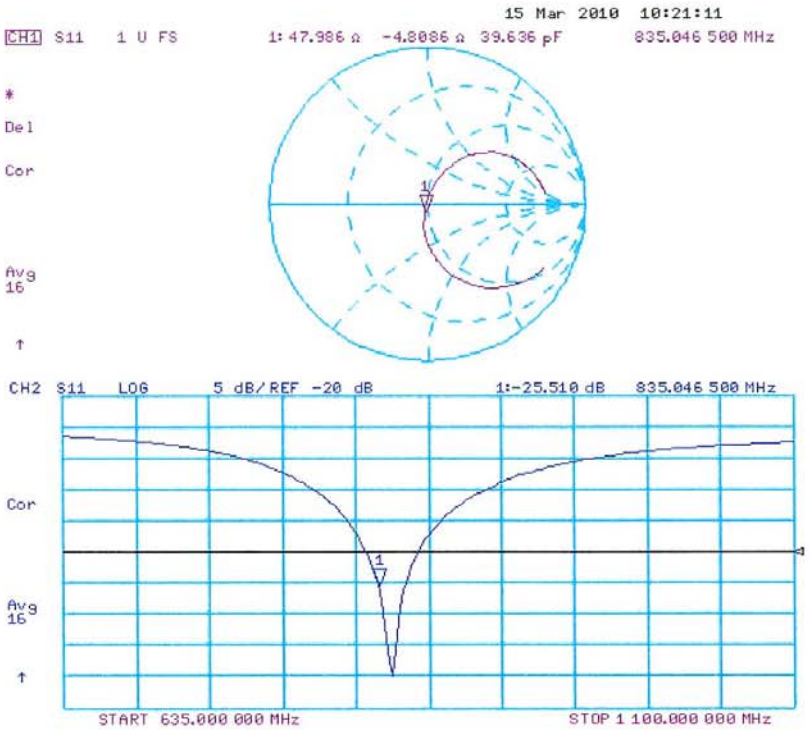

Calibration Laboratory of
Schmid & Partner
Engineering AG
Zeughausstrasse 43, 8004 Zurich, Switzerland

S Schweizerischer Kalibrierdienst
C Service suisse d'étalonnage
Servizio svizzero di taratura
S Swiss Calibration Service

Accredited by the Swiss Accreditation Service (SAS)
The Swiss Accreditation Service is one of the signatories to the EA Multilateral Agreement for the recognition of calibration certificates

Accreditation No.: **SCS 108**

Client **Quietek (Auden)**

Certificate No: **D1900V2-5d121_Mar10**

CALIBRATION CERTIFICATE

Object	D1900V2 - SN: 5d121
Calibration procedure(s)	QA CAL-05.v7 Calibration procedure for dipole validation kits
Calibration date:	March 23, 2010

This calibration certificate documents the traceability to national standards, which realize the physical units of measurements (SI).
The measurements and the uncertainties with confidence probability are given on the following pages and are part of the certificate.

All calibrations have been conducted in the closed laboratory facility: environment temperature (22 ± 3)°C and humidity < 70%.

Calibration Equipment used (M&TE critical for calibration)

Primary Standards	ID #	Cal Date (Certificate No.)	Scheduled Calibration
Power meter EPM-442A	GB37480704	06-Oct-09 (No. 217-01086)	Oct-10
Power sensor HP 8481A	US37292783	06-Oct-09 (No. 217-01086)	Oct-10
Reference 20 dB Attenuator	SN: 5086 (20g)	31-Mar-09 (No. 217-01025)	Mar-10
Type-N mismatch combination	SN: 5047.2 / 06327	31-Mar-09 (No. 217-01029)	Mar-10
Reference Probe ES3DV3	SN: 3205	26-Jun-09 (No. ES3-3205_Jun09)	Jun-10
DAE4	SN: 601	02-Mar-10 (No. DAE4-601_Mar10)	Mar-11

Secondary Standards	ID #	Check Date (in house)	Scheduled Check
Power sensor HP 8481A	MY41092317	18-Oct-02 (in house check Oct-09)	In house check: Oct-11
RF generator R&S SMT-06	100005	4-Aug-99 (in house check Oct-09)	In house check: Oct-11
Network Analyzer HP 8753E	US37390585 S4206	18-Oct-01 (in house check Oct-09)	In house check: Oct-10

	Name	Function	Signature
Calibrated by:	Dimce Iliev	Laboratory Technician	D. Iliev
Approved by:	Katja Pokovic	Technical Manager	

Issued: March 23, 2010

This calibration certificate shall not be reproduced except in full without written approval of the laboratory.

Calibration Laboratory of
Schmid & Partner
Engineering AG
Zeughausstrasse 43, 8004 Zurich, Switzerland

S Schweizerischer Kalibrierdienst
C Service suisse d'étalonnage
S Servizio svizzero di taratura
Swiss Calibration Service

Accredited by the Swiss Accreditation Service (SAS)
The Swiss Accreditation Service is one of the signatories to the EA Multilateral Agreement for the recognition of calibration certificates

Accreditation No.: SCS 108

Glossary:

TSL	tissue simulating liquid
ConvF	sensitivity in TSL / NORM x,y,z
N/A	not applicable or not measured

Calibration is Performed According to the Following Standards:

a) IEEE Std 1528-2003, "IEEE Recommended Practice for Determining the Peak Spatial-Averaged Specific Absorption Rate (SAR) in the Human Head from Wireless Communications Devices: Measurement Techniques", December 2003
b) IEC 62209-1, "Procedure to measure the Specific Absorption Rate (SAR) for hand-held devices used in close proximity to the ear (frequency range of 300 MHz to 3 GHz)", February 2005
c) Federal Communications Commission Office of Engineering & Technology (FCC OET), "Evaluating Compliance with FCC Guidelines for Human Exposure to Radiofrequency Electromagnetic Fields; Additional Information for Evaluating Compliance of Mobile and Portable Devices with FCC Limits for Human Exposure to Radiofrequency Emissions", Supplement C (Edition 01-01) to Bulletin 65

Additional Documentation:

d) DASY4/5 System Handbook

Methods Applied and Interpretation of Parameters:

- *Measurement Conditions:* Further details are available from the Validation Report at the end of the certificate. All figures stated in the certificate are valid at the frequency indicated.
- *Antenna Parameters with TSL:* The dipole is mounted with the spacer to position its feed point exactly below the center marking of the flat phantom section, with the arms oriented parallel to the body axis.
- *Feed Point Impedance and Return Loss:* These parameters are measured with the dipole positioned under the liquid filled phantom. The impedance stated is transformed from the measurement at the SMA connector to the feed point. The Return Loss ensures low reflected power. No uncertainty required.
- *Electrical Delay:* One-way delay between the SMA connector and the antenna feed point. No uncertainty required.
- *SAR measured:* SAR measured at the stated antenna input power.
- *SAR normalized:* SAR as measured, normalized to an input power of 1 W at the antenna connector.
- *SAR for nominal TSL parameters:* The measured TSL parameters are used to calculate the nominal SAR result.

Measurement Conditions

DASY system configuration, as far as not given on page 1.

DASY Version	DASY5	V5.2
Extrapolation	Advanced Extrapolation	
Phantom	Modular Flat Phantom V5.0	
Distance Dipole Center - TSL	10 mm	with Spacer
Zoom Scan Resolution	dx, dy, dz = 5 mm	
Frequency	1900 MHz ± 1 MHz	

Head TSL parameters

The following parameters and calculations were applied.

	Temperature	**Permittivity**	**Conductivity**
Nominal Head TSL parameters	22.0 °C	40.0	1.40 mho/m
Measured Head TSL parameters	(22.0 ± 0.2) °C	41.1 ± 6 %	1.45 mho/m ± 6 %
Head TSL temperature during test	(21.5 ± 0.2) °C	----	----

SAR result with Head TSL

SAR averaged over 1 cm^3 (1 g) of Head TSL	Condition	
SAR measured	250 mW input power	10.1 mW / g
SAR normalized	normalized to 1W	40.4 mW / g
SAR for nominal Head TSL parameters	normalized to 1W	**39.8 mW /g ± 17.0 % (k=2)**

SAR averaged over 10 cm^3 (10 g) of Head TSL	condition	
SAR measured	250 mW input power	5.30 mW / g
SAR normalized	normalized to 1W	21.2 mW / g
SAR for nominal Head TSL parameters	normalized to 1W	**21.1 mW /g ± 16.5 % (k=2)**

Body TSL parameters

The following parameters and calculations were applied.

	Temperature	Permittivity	Conductivity
Nominal Body TSL parameters	22.0 °C	53.3	1.52 mho/m
Measured Body TSL parameters	(22.0 ± 0.2) °C	54.9 ± 6 %	1.58 mho/m ± 6 %
Body TSL temperature during test	(21.5 ± 0.2) °C	----	----

SAR result with Body TSL

SAR averaged over 1 cm^3 (1 g) of Body TSL	Condition	
SAR measured	250 mW input power	10.5 mW / g
SAR normalized	normalized to 1W	42.0 mW / g
SAR for nominal Body TSL parameters	normalized to 1W	**41.4 mW / g ± 17.0 % (k=2)**

SAR averaged over 10 cm^3 (10 g) of Body TSL	condition	
SAR measured	250 mW input power	5.60 mW / g
SAR normalized	normalized to 1W	22.4 mW / g
SAR for nominal Body TSL parameters	normalized to 1W	**22.3 mW / g ± 16.5 % (k=2)**

Appendix

Antenna Parameters with Head TSL

Impedance, transformed to feed point	50.6 Ω + 7.4 jΩ
Return Loss	- 22.7 dB

Antenna Parameters with Body TSL

Impedance, transformed to feed point	46.1 Ω + 7.1 jΩ
Return Loss	- 21.5 dB

General Antenna Parameters and Design

Electrical Delay (one direction)	1.205 ns

After long term use with 100W radiated power, only a slight warming of the dipole near the feedpoint can be measured.

The dipole is made of standard semirigid coaxial cable. The center conductor of the feeding line is directly connected to the second arm of the dipole. The antenna is therefore short-circuited for DC-signals.
No excessive force must be applied to the dipole arms, because they might bend or the soldered connections near the feedpoint may be damaged.

Additional EUT Data

Manufactured by	SPEAG
Manufactured on	August 25, 2009

DASY5 Validation Report for Head TSL

Date/Time: 23.03.2010 12:23:06

Test Laboratory: SPEAG, Zurich, Switzerland

DUT: Dipole 1900 MHz; Type: D1900V2; Serial: D1900V2 - SN:5d121

Communication System: CW; Frequency: 1900 MHz; Duty Cycle: 1:1
Medium: HSL U11 BB
Medium parameters used: f = 1900 MHz; σ = 1.45 mho/m; ε_r = 41.2; ρ = 1000 kg/m^3
Phantom section: Flat Section
Measurement Standard: DASY5 (IEEE/IEC/ANSI C63.19-2007)

DASY5 Configuration:

- Probe: ES3DV3 - SN3205; ConvF(5.09, 5.09, 5.09); Calibrated: 26.06.2009
- Sensor-Surface: 3mm (Mechanical Surface Detection)
- Electronics: DAE4 Sn601; Calibrated: 02.03.2010
- Phantom: Flat Phantom 5.0 (front); Type: QD000P50AA; Serial: 1001
- Measurement SW: DASY5, V5.2 Build 157; SEMCAD X Version 14.0 Build 57

Pin=250 mW /d=10mm, dist=3.0mm (ES-Probe)/Zoom Scan (7x7x7) /Cube 0: Measurement grid: dx=5mm, dy=5mm, dz=5mm
Reference Value = 97.6 V/m; Power Drift = 0.00658 dB
Peak SAR (extrapolated) = 18.5 W/kg
SAR(1 g) = 10.1 mW/g; SAR(10 g) = 5.3 mW/g
Maximum value of SAR (measured) = 12.8 mW/g

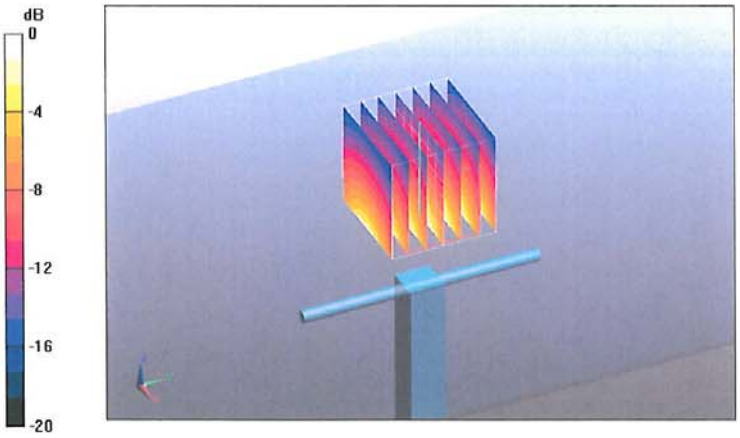

0 dB = 12.8mW/g

Impedance Measurement Plot for Head TSL

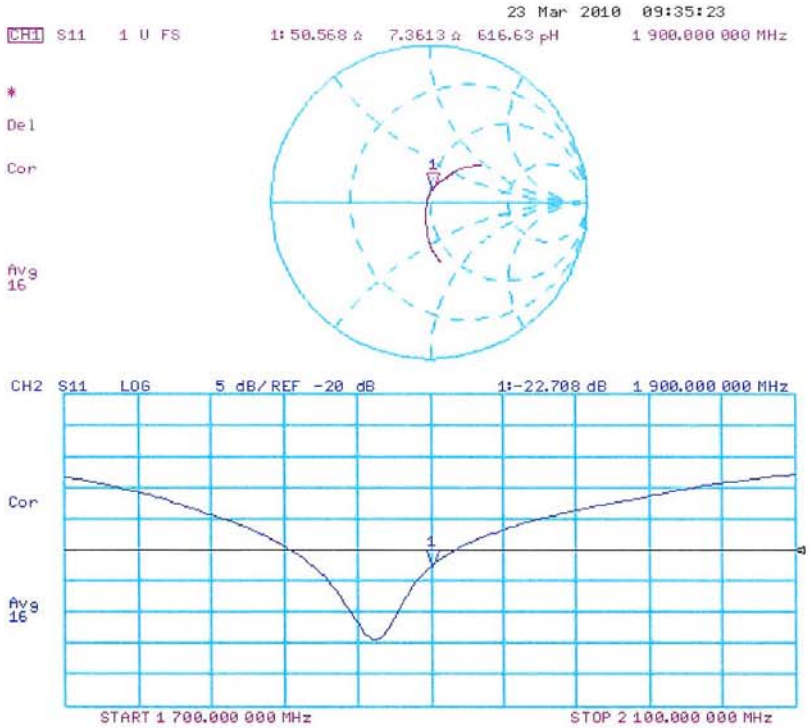

DASY5 Validation Report for Body

Date/Time: 17.03.2010 13:29:09

Test Laboratory: SPEAG, Zurich, Switzerland

DUT: Dipole 1900 MHz; Type: D1900V2; Serial: D1900V2 - SN:5d121

Communication System: CW; Frequency: 1900 MHz; Duty Cycle: 1:1
Medium: MSL U11 BB
Medium parameters used: f = 1900 MHz; σ = 1.58 mho/m; ε_r = 55; ρ = 1000 kg/m^3
Phantom section: Flat Section
Measurement Standard: DASY5 (IEEE/IEC/ANSI C63.19-2007)

DASY5 Configuration:

- Probe: ES3DV3 - SN3205; ConvF(4.59, 4.59, 4.59); Calibrated: 26.06.2009
- Sensor-Surface: 3mm (Mechanical Surface Detection)
- Electronics: DAE4 Sn601; Calibrated: 02.03.2010
- Phantom: Flat Phantom 5.0 (back); Type: QD000P50AA; Serial: 1002
- Measurement SW: DASY5, V5.2 Build 157; SEMCAD X Version 14.0 Build 57

Pin250 mW /d=10mm, dist=3.0mm (ES-Probe)/Zoom Scan (7x7x7) /Cube 0: Measurement grid: dx=5mm, dy=5mm, dz=5mm
Reference Value = 97 V/m; Power Drift = 0.00345 dB
Peak SAR (extrapolated) = 17.6 W/kg
SAR(1 g) = 10.5 mW/g; SAR(10 g) = 5.6 mW/g
Maximum value of SAR (measured) = 13.3 mW/g

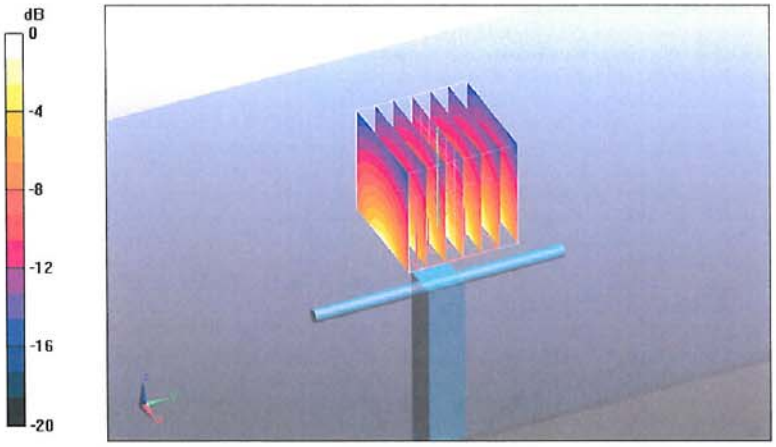

0 dB = 13.3mW/g

Appendix F. DAE Calibration Data

Calibration Laboratory of
Schmid & Partner
Engineering AG
Zeughausstrasse 43, 8004 Zurich, Switzerland

S Schweizerischer Kalibrierdienst
C Service suisse d'étalonnage
Servizio svizzero di taratura
S Swiss Calibration Service

Accredited by the Swiss Accreditation Service (SAS)
The Swiss Accreditation Service is one of the signatories to the EA Multilateral Agreement for the recognition of calibration certificates

Accreditation No.: SCS 108

Client **Quietek (Auden)**

Certificate No: DAE4-1220_Dec10

CALIBRATION CERTIFICATE

Object	DAE4 - SD 000 D04 BJ - SN: 1220
Calibration procedure(s)	QA CAL-06.v22 Calibration procedure for the data acquisition electronics (DAE)
Calibration date:	December 3, 2010

This calibration certificate documents the traceability to national standards, which realize the physical units of measurements (SI).
The measurements and the uncertainties with confidence probability are given on the following pages and are part of the certificate.

All calibrations have been conducted in the closed laboratory facility: environment temperature (22 ± 3)°C and humidity < 70%.

Calibration Equipment used (M&TE critical for calibration)

Primary Standards	ID #	Cal Date (Certificate No.)	Scheduled Calibration
Keithley Multimeter Type 2001	SN: 0810278	28-Sep-10 (No:10376)	Sep-11
Secondary Standards	**ID #**	**Check Date (in house)**	**Scheduled Check**
Calibrator Box V1.1	SE UMS 006 AB 1004	07-Jun-10 (in house check)	In house check: Jun-11

	Name	Function	Signature
Calibrated by:	Eric Hainfeld	Technician	
Approved by:	Fin Bomholt	R&D Director	i.V.

Issued: December 3, 2010

This calibration certificate shall not be reproduced except in full without written approval of the laboratory.

Calibration Laboratory of
Schmid & Partner
Engineering AG
Zeughausstrasse 43, 8004 Zurich, Switzerland

S Schweizerischer Kalibrierdienst
C Service suisse d'étalonnage
Servizio svizzero di taratura
S Swiss Calibration Service

Accredited by the Swiss Accreditation Service (SAS)
The Swiss Accreditation Service is one of the signatories to the EA Multilateral Agreement for the recognition of calibration certificates

Accreditation No.: SCS 108

Glossary

DAE	data acquisition electronics
Connector angle	information used in DASY system to align probe sensor X to the robot coordinate system.

Methods Applied and Interpretation of Parameters

- *DC Voltage Measurement:* Calibration Factor assessed for use in DASY system by comparison with a calibrated instrument traceable to national standards. The figure given corresponds to the full scale range of the voltmeter in the respective range.
- *Connector angle*: The angle of the connector is assessed measuring the angle mechanically by a tool inserted. Uncertainty is not required.
- The following parameters as documented in the Appendix contain technical information as a result from the performance test and require no uncertainty.
  - *DC Voltage Measurement Linearity:* Verification of the Linearity at +10% and -10% of the nominal calibration voltage. Influence of offset voltage is included in this measurement.
  - *Common mode sensitivity:* Influence of a positive or negative common mode voltage on the differential measurement.
  - *Channel separation:* Influence of a voltage on the neighbor channels not subject to an input voltage.
  - *AD Converter Values with inputs shorted:* Values on the internal AD converter corresponding to zero input voltage
  - *Input Offset Measurement*: Output voltage and statistical results over a large number of zero voltage measurements.
  - *Input Offset Current:* Typical value for information; Maximum channel input offset current, not considering the input resistance.
  - *Input resistance:* Typical value for information: DAE input resistance at the connector, during internal auto-zeroing and during measurement.
  - *Low Battery Alarm Voltage:* Typical value for information. Below this voltage, a battery alarm signal is generated.
  - *Power consumption:* Typical value for information. Supply currents in various operating modes.

DC Voltage Measurement

A/D - Converter Resolution nominal

High Range: 1LSB = 6.1μV , full range = -100...+300 mV

Low Range: 1LSB = 61nV , full range = -1.....+3mV

DASY measurement parameters: Auto Zero Time: 3 sec; Measuring time: 3 sec

Calibration Factors	X	Y	Z
High Range	405.229 ± 0.1% (k=2)	404.950 ± 0.1% (k=2)	404.184 ± 0.1% (k=2)
Low Range	3.97007 ± 0.7% (k=2)	3.98601 ± 0.7% (k=2)	3.99287 ± 0.7% (k=2)

Connector Angle

Connector Angle to be used in DASY system	177.5 ° ± 1 °

Appendix

1. DC Voltage Linearity

High Range		Reading (μV)	Difference (μV)	Error (%)
Channel X	+ Input	200002.4	1.22	0.00
Channel X	+ Input	20001.01	0.91	0.00
Channel X	- Input	-19997.57	2.63	-0.01
Channel Y	+ Input	200008.1	-2.52	-0.00
Channel Y	+ Input	19998.92	-1.38	-0.01
Channel Y	- Input	-20001.39	-1.29	0.01
Channel Z	+ Input	200011.1	1.59	0.00
Channel Z	+ Input	19998.31	-1.89	-0.01
Channel Z	- Input	-20000.79	-0.99	0.00

Low Range		Reading (μV)	Difference (μV)	Error (%)
Channel X	+ Input	1999.8	-0.22	-0.01
Channel X	+ Input	199.68	-0.32	-0.16
Channel X	- Input	-200.45	-0.25	0.12
Channel Y	+ Input	1999.6	-0.27	-0.01
Channel Y	+ Input	199.03	-1.07	-0.54
Channel Y	- Input	-200.66	-0.76	0.38
Channel Z	+ Input	2000.0	-0.04	-0.00
Channel Z	+ Input	198.94	-1.26	-0.63
Channel Z	- Input	-201.36	-1.46	0.73

2. Common mode sensitivity

DASY measurement parameters: Auto Zero Time: 3 sec; Measuring time: 3 sec

	Common mode Input Voltage (mV)	High Range Average Reading (μV)	Low Range Average Reading (μV)
Channel X	200	10.60	8.62
	- 200	-7.59	-9.45
Channel Y	200	-9.68	-9.86
	- 200	9.01	8.51
Channel Z	200	12.06	12.10
	- 200	-13.84	-14.49

3. Channel separation

DASY measurement parameters: Auto Zero Time: 3 sec; Measuring time: 3 sec

	Input Voltage (mV)	Channel X (μV)	Channel Y (μV)	Channel Z (μV)
Channel X	200	-	2.85	-0.96
Channel Y	200	1.60	-	3.41
Channel Z	200	2.29	-1.66	-

4. AD-Converter Values with inputs shorted

DASY measurement parameters: Auto Zero Time: 3 sec; Measuring time: 3 sec

	High Range (LSB)	Low Range (LSB)
Channel X	15905	14404
Channel Y	16020	13780
Channel Z	15698	14978

5. Input Offset Measurement

DASY measurement parameters: Auto Zero Time: 3 sec; Measuring time: 3 sec
Input 10MΩ

	Average (μV)	min. Offset (μV)	max. Offset (μV)	Std. Deviation (μV)
Channel X	-0.06	-1.34	1.46	0.43
Channel Y	-0.85	-2.00	0.10	0.32
Channel Z	-0.99	-2.44	0.46	0.44

6. Input Offset Current

Nominal Input circuitry offset current on all channels: <25fA

7. Input Resistance (Typical values for information)

	Zeroing (kOhm)	Measuring (MOhm)
Channel X	200	200
Channel Y	200	200
Channel Z	200	200

8. Low Battery Alarm Voltage (Typical values for information)

Typical values	Alarm Level (VDC)
Supply (+ Vcc)	+7.9
Supply (- Vcc)	-7.6

9. Power Consumption (Typical values for information)

Typical values	Switched off (mA)	Stand by (mA)	Transmitting (mA)
Supply (+ Vcc)	+0.01	+6	+14
Supply (- Vcc)	–0.01	-8	-9