Model:C96E-AABBC01
C96E-AAAAA01
C96E-ABBCC01

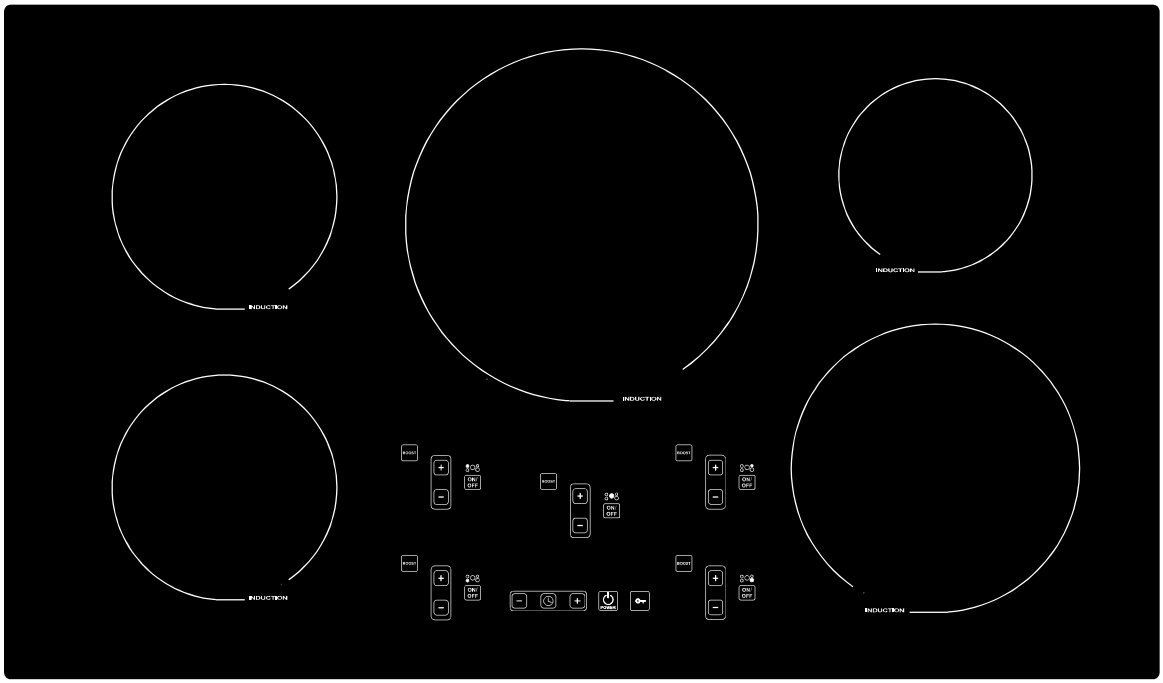

Five Burner

User Guide

Table of Contents

I. Important Safety Information.....1-4
II. Control Panel Overview.....5
III. Specifications & How to Use.....6
• Heating Power for Each Cooking Zone.....6
• Operating the keys 7
• Switching on the hob and cooking zones.....7
• Standby Mode.....7
• While in cooking.....7
• While in stop cooking.....7
• Lock.....8
• Turn off.....8
• Timer.....9
IV. Compatible Cookware.....10
V. Cleaning and Maintenance.....10-11
VI. Counter Installation Instruction.....12-15
VII. Troubleshooting.....16-17
VIII. FCC STATEMENT.....18

Thank you for purchasing the our Induction five burner unit.
Please read the entire instruction manual prior to using your unit.

Fill out the following information for future reference

Brand _____

Purchase Date _____

Model Number _____

Serial Number _____

I. Important Safety Informaton

- When using electrical appliances,basic safety precautions should always be followed.For the Induction cooker,even with the built-in safety features,it is essental to heed all precautons.
- Installaton of the appliance into a kitchen countertop and its connecton to the main power and electrical supply may only be performed by a qualified technician.
- While cooking any overflowed fat or oil on the cooktop may ignite. There is a risk of burning and fire; therefore,control the cooking process at all tmes.
- Never leave the cooktop unatended at High Heat setngs or when cooking oil or fat−boil over causes smoking and greasy spillovers that may ignite.
- When the unit is on,do not touch outside the control panel as the surface may contain residual heat.
- To protect against electric shock, do not immerse cord plugs or cooker in water (or other liquid substances).
- When using any electric appliance around children,close supervision is strongly suggested.
- Do not operate any appliance with a damaged cord or plug, afer a malfuncton or if it has been damaged in any manner.Read the seller's guidelines for warranty repairs and returns.
- Do not cook on a broken or damaged cooktop as spillovers may penetrate surface and create a risk of electric shock.
- To avoid potental injury,do not use accessory atachments which aren't recommended by the manufacturer.
- Do not use outdoors, The Inducton cooktops are designed for household use.
- Do not let the cord dangle over the edge of a table or counter. Keep the cord away from hot surfaces.
- Do not place cooktop on or near:hot gas, electric burner, or heated oven. Avoid preparing food in aluminum foil or plastc containers over the hot cooking zones.
- Do not store and temperature-sensitve objects, materials, or substances underneath the cooktop,such as:detergents,sprays,etc.
- To prevent accidents and achieve optmal fan ventlaton, allow for sufficient space around the cooking area. Items with a magnetc filed such as:radios,televisions, credit cards, cassete tapes etc.,can affect the unit.
- The marked electrical ratng should be at least as great as the electrical ratng on the appliance.
- The cord should be arranged so that it will not drape over the countertop or tabletop where it can be pulled on by children or tripped over.
- Do not use with empty pans/pots.
- Do not use cooktop for another use than directed by the manufacturer.
- Wear proper-loose fitng or hanging garments should never be worn while using the appliance.
- In case of appliance failure, immediately disconnect the appliance from the main power source and contact the manufacturer.

I. Important Safety Informaton

- Proper Installation – Be sure your appliance is properly installed and grounded by a qualified technician.
- Never Use Your Appliance for Warming or Heating the Room.
- Do Not Leave Children Alone – Children should not be left alone or unattended in area where appliance is in use. They should never be allowed to sit or stand on any part of the appliance.
- Wear Proper Apparel – Loose-fitting or hanging garments should never be worn while using the appliance.
- User Servicing – Do not repair or replace any part of the appliance unless specifically recommended in the manual. All other servicing should be referred to a qualified technician.
- Storage in or on Appliance – Flammable materials should not be stored in an oven or near surface units.
- Do Not Use Water on Grease Fires – Smother fire or flame or use dry chemical or foam-type extinguisher.
- Use Only Dry Potholders – Moist or damp potholders on hot surfaces may result in burns from steam. Do not let potholder touch hot heating elements. Do not use a towel or other bulky cloth.
- Use Proper Pan Size – This appliance is equipped with one or more surface units of different size. Select utensils having flat bottoms large enough to cover the surface unit heating element. The use of undersized utensils will expose a portion of the heating element to direct contact and may result in ignition of clothing. Proper relationship of utensil to burner will also improve efficiency.
- Never Leave Surface Units Unattended at High Heat Settings – Boilover causes smoking and greasy spillovers that may ignite.
- Make Sure Reflector Pans or Drip Bowls Are in Place – Absence of these pans or bowls during cooking may subject wiring or components underneath to damage.
- Protective Liners – Do not use aluminum foil to line surface unit drip bowls or oven bottoms, except as suggested in the manual. Improper installation of these liners may result in a risk of electric shock, or fire.
- Glazed Cooking Utensils – Only certain types of glass, glass/ceramic, ceramic, earthenware, or other glazed utensils are suitable for range-top service without breaking due to the sudden change in temperature.
- Utensil Handles Should Be Turned Inward and Not Extend Over Adjacent Surface Units – To reduce the risk of burns, ignition of flammable materials, and spillage due to unintentional contact with the utensil, the handle of a utensil should be positioned so that it is turned inward, and does not extend over adjacent surface units.
- Do Not Soak Removable Heating Elements – Heating elements should never be immersed in water.

I. Important Safety Informaton

- Do Not Cook on Broken Cook-Top – If cook-top should break, cleaning solutions and spillovers may penetrate the broken cook-top and create a risk of electric shock. Contact a qualified technician immediately.
- Do Not Cook on Broken Cook-Top – If cook-top should break, cleaning solutions and spillovers may penetrate the broken cook-top and create a risk of electric shock. Contact a qualified technician immediately.
- Clean Cook-Top With Caution – If a wet sponge or cloth is used to wipe spills on a hot cooking area, be careful to avoid steam burn. Some cleaners can produce noxious fumes if applied to a hot surface.of electric shock. Contact a qualified technician immediately.
- DO NOT TOUCH SURFACE UNITS OR AREAS NEAR UNITS – Surface units may be hot even though they are dark in color. Areas near surface units may become hot enough to cause
burns. During and after use, do not touch, or let clothing or other flammable materials contact surface units or areas near units until they have had sufficient time to cool. Among these areas are Cooking zone
- If the malfunction light goes on, or if the audible signal sounds, appliance is malfunctioning. Turn off or disconnect appliance from power supply and have serviced by a qualified technician.
- Do not place metallic objects such as knives, forks, spoons, lids, cans or aluminum foil on the cooktop.
- To prevent accidents and achieve optimal ventilation, allow for sufficient space around the cooking area.
- The appliance is manufactured in compliance with the relevant effective safety standard. Nevertheless, we strongly recommend that a person with physically or mentally impaired, do not use the appliance unless accompanied by a qualified person.The same recommendation applies to children.
- It is important to be aware that the unit's surface will remain hot for a short period of time after use.
- Unplug the cooktop from the outlet when not in use and before cleaning.
Allow to cool before performing any maintenance or repairs.
- Clean cooktop with caution-do not clean while unit is still hot,some cleaners product steam or fumes if applied to a heated surface.
- Do not store items of interest to children in cabinets above the range or on the backguard of a range-children climbing on the range to reach items could get seriously injured.
- The power cord has been sized accordingly, however, with caution and care,an extension cord may be used.
- To reduce risk of burns,ignition of flammable materials,and spillage due to unintentional contact with cookware,the cookware handles should be turned inward and not extend over adjacent heating surface.
- Clean cooktop with caution-If a wet sponge or cloth is used to wipe spills on a hot cooking area,be careful to avoid steam burn. Some cleaners can product noxious fumes if applied to a hot surface.
- Do not use steam cleaners or high-pressure cleaners to clean the cooktop,as this may result in electric shock.

I. Important Safety Informaton

This product should not be thrown away as household waste. Instead it should be handed over to the applicable collection point for the recycling of electrical and electronic equipment. By ensuring this product is disposed of correctly, you will help prevent potential negative consequences to the environment and human health, which could otherwise be caused by inappropriate waste handling of this product. For more detailed information about recycling of this product, please contact your local city office, your household waste disposal service or the store where you purchased the product.

SAVE THESE WARNINGS

II. Control Panel Overview

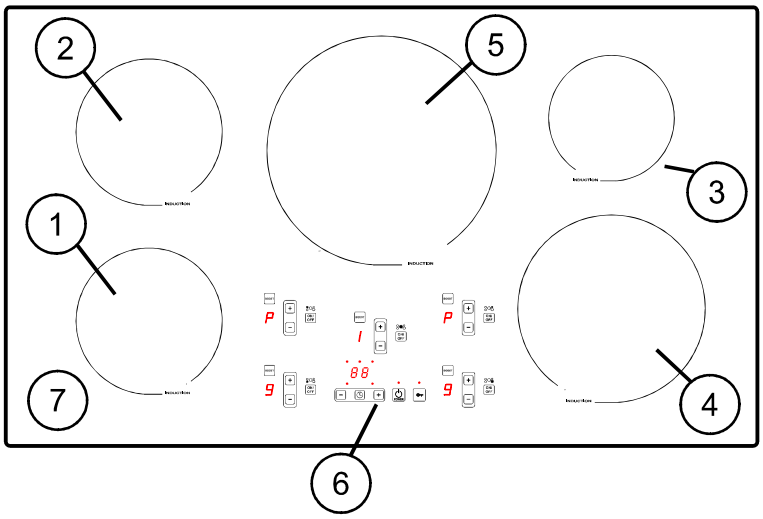

1. Front left cooking zone
2. Back left cooking zone
3. Back right cooking zone
4. Front right cooking zone
5. Middle cooking zone
6. Ceramic glass
7. Touch control panel

Diagram make look different from actual product.

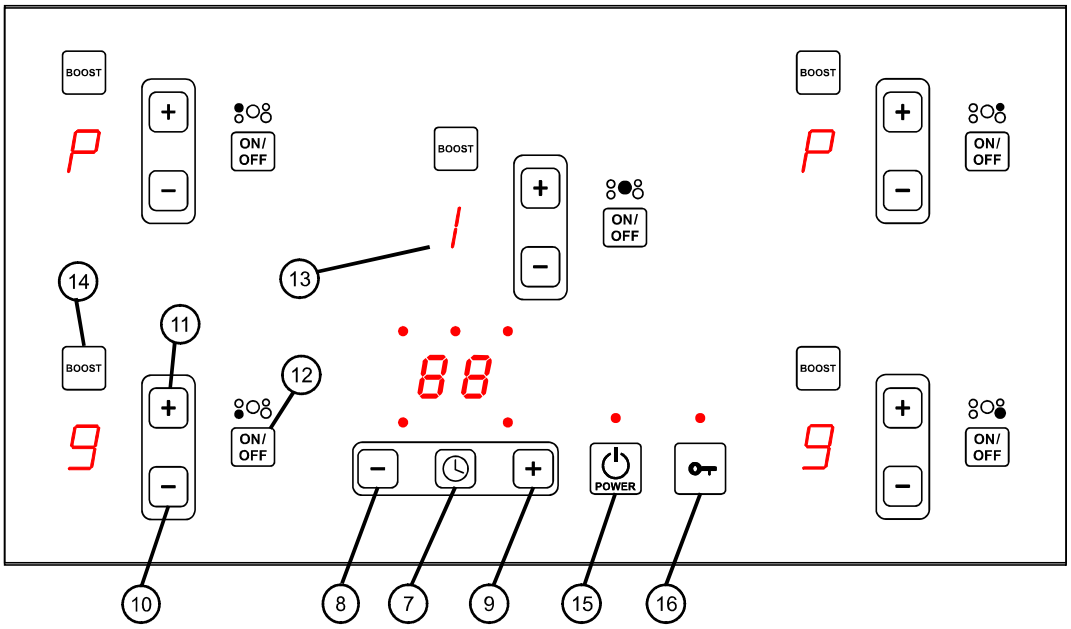

7. Timer Control Keys
8. Lower time key
9. Raise time key
10. Lower power key
11. Raise power key
12. Cooking Zone ON/OFF key
13. Power or residual heat display
14. Power boost key
15. Power button
16. Child safety lock

III. Specificatons & How to Use

Power	9600 Wats
Voltage	240V / 60Hz
Power Range	100W -3700W
Level Selecton	Select setngs 1 through 9
Max Time	Set tmer from 1 to 99 minutes
Material	Glass Ceramic Top / Metal Body
Unit Measurements	36" width x 21" length x 2-5/32" height
Installation Type	Drop-in
Installs Over Built-in Oven	Yes
Installaton Dimensions(WxD)	34-14/16" x 1-31/32"

Heatng Power of Each Cooking Zone:

Madel:C96E-AABBC01/C96E-AAAAA01

Level / Rated power	1	2	3	4	5	6	7	8	9	P
Left front	100(1000W ON1S、OFF9S)	200(1000W ON2S、OFF8S)	300(1000W ON3S、OFF7S)	600(1000W ON6S、OFF4S)	1000W	1200W	1400W	1600W	1800W	2600W
Left rear	100(1000W ON1S、OFF9S)	200(1000W ON2S、OFF8S)	300(1000W ON3S、OFF7S)	600(1000W ON6S、OFF4S)	1000W	1200W	1400W	1600W	1800W	2600W
Right rear	100(1000W ON1S、OFF9S)	200(1000W ON2S、OFF8S)	300(1000W ON3S、OFF7S)	600(1000W ON6S、OFF4S)	800(1000W ON8S、OFF2S)	1000W	1100W	1200W	1400W	1800W
Right front	100(400W ON3S、OFF7S)	200(400W ON5S、OFF5S)	400W	600W	1000W	1400W	1600W	2000W	2200W	3200W
Middle	100(400W ON3S、OFF7S)	200(400W ON5S、OFF5S)	400W	600W	1000W	1400W	1600W	2000W	2400W	3700W

Madel:C96E-ABBCC01

Level / Rated power	1	2	3	4	5	6	7	8	9	P
Left front	100(1000W ON1S、OFF9S)	200(1000W ON2S、OFF8S)	300(1000W ON3S、OFF7S)	600(1000W ON6S、OFF4S)	1000W	1200W	1400W	1600W	1800W	2000W
Left rear	100(1000W ON1S、OFF9S)	200(1000W ON2S、OFF8S)	300(1000W ON3S、OFF7S)	600(1000W ON6S、OFF4S)	800(1000W ON8S、OFF2S)	1000W	1100W	1200W	1400W	1800W
Right rear	100(1000W ON1S、OFF9S)	200(1000W ON2S、OFF8S)	300(1000W ON3S、OFF7S)	600(1000W ON6S、OFF4S)	1000W	1200W	1400W	1600W	1800W	2500W
Right front	100(1000W ON1S、OFF9S)	200(1000W ON2S、OFF8S)	300(1000W ON3S、OFF7S)	600(1000W ON6S、OFF4S)	1000W	1200W	1400W	1600W	1800W	2500W
Middle	100(400W ON3S、OFF7S)	200(400W ON5S、OFF5S)	400W	600W	1000W	1400W	1600W	2000W	2400W	3700W

Total Power:9600W

We divide the left and middle 3 burners and the Right 2 burners into 2 different groups and among each group with rated power of 4800W.Left front and Left rear and middle burner stove for a group of the Total power of 3700W.Right front and Right rear burner stove for a group of the total rated power of 4800W.

III. How to Use

Readiness Mode

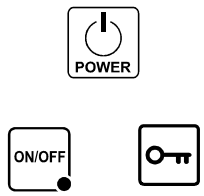

While on standby mode, press the main "POWER"key, the induction hob will make a "beep" sound once indicating that it is ready to use. If only the indicator light above the "POWER" key is lit up, the unit will automatically return to standby mode if the Cooking zone ON/OFF key or Lock key are not chosen within 30 seconds.

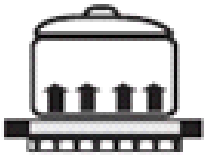

Suitable for induction cooktop

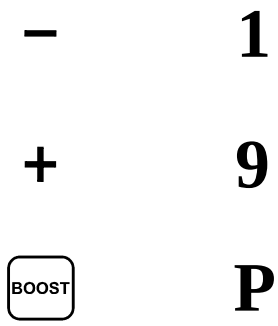

Switching on the hob and cooking zones

Place a compatible pot or pan on the cooking zone you wish to use.
With the hob being ON as mentioned above, press the desired cooking zone ON/OFF key. The display will blink and show a "0".
Press either the "+" key, "-" key, "Boost" key, to select a cooking level. The cooking zone will automatically turn on standby mode if a key is not pressed within 30 seconds.
Press the minus key (-) to lower the cooking level.
Press the Plus key (+) to raise the cooking level.
Pressing the "Boost" key will show on the display as a "Boost", boosting the heating power to the highest level.

III. How to Use

Lock

Activating the Child Safety Lock during cooktop use:
Child Lock prevents activation of any sensor key, except for the “ POWER ” key and the “Lock” key.

A. Manual: Press the Lock key to activate the function. The unit will make a “beep” sound and the indicator light will turn on above the Lock key. The controls are now locked.

B. Automatic: The induction cooktop will automatically enter into Lock mode if any key is not pressed within 5 minutes. The unit will make a “beep” sound and the indicator light will turn on above the “Lock” key when the automatic Lock mode is activated.

Switch off the lock
While in Lock mode, press the Lock key to deactivate the function. The indicator light will turn off.

Turn off

POWER

a. Press the ON/OFF key of the cooking zone being used. It will make a “beep” sound once,and it will turn off.

ON/OFF

b. Turn off the entire unit by pressing the “ POWER ”key,which will also make a “beep”sound once,and the indicator light will turn off.The Unit is now on standby mode.

Note: Please do not pull the power plug until the cooling fan has stopped.

III. How to Use

Timer

Setting the Timer to Automatic switch-off:

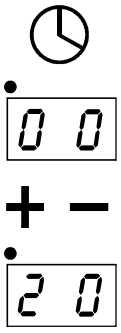

With the desired heating zone Powered ON, press the “Timer” key. The timer display will blink and show a “00”, Press the “+” or “-” to increase or decrease to the desired time until the desired time appears in the display (Choose up to 99 minutes). Once the Timer is set, if keys haven't been pressed after 5 seconds, it will begin to countdown, the timer display will remain lit, the indicator for that particular burner will flash. When the time reaches “0”, a “beeping” sound will go off indicating that the time is up, and selected heating zone shut off automatically.

If you want to set another burner to switch-off automatically, press “Timer” key to until the desired timer indicator blink, repeat the same steps.

If you want to check the remaining time for another zone, press the “Timer” until the indicator for the desired burner blinks.

If more than one switch-off time is programmed, the shortest time remaining will show in the display, the indicator for that particular burner will flash.

Cancelling the timer:
Press the “Timer” until the indicator for the desired burner blinks, then press the “+” or “-” to set the timer to 0. The Timer display will blink for 5 seconds and then turn off, indicating that the timer of selected heating zone has been cancelled.

Hot surface indicator light

After using any of the cooking zones, the cooktop will remain very hot. Even after turning off the entre unit, the surface of the cooktop will remain hot for some time. The display for the cooking zones will display an “H” to warn the user that the surface is hot to the touch. Wait until the “H” is no longer displayed to clean the unit. You may turn the unit back on even if the “H” is displayed.

IV. Compatble Cookware

Inducton requires pots and pans that are made of ferrous(meaning magnetc) materials.

Check your cookware's retail box for the inducton symbol. To tell if your current cookware is compatble with the inducton technology, grab a magnet and see if it holds to the botom of the cookware. If your magnet stays on then your cookware is ready to be used on the Inducton five burner inducton drop- in cooktop!

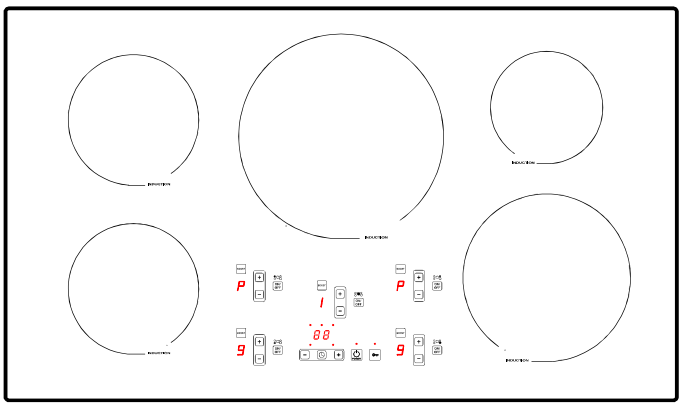

Optmally the cookware will have this inducton image on the retail box:

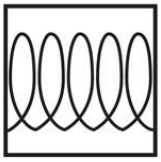

Induction

The following are not compatble: heat-resistant glass,ceramic,copper, aluminum pan/pots,round-botomed cookware,or cookware with a base less than 5 inches.

V. Cleaning and Maintenance

Please follow these directions along with Important Safety steps for cleaning, advised at the beginning of the manual. Use a ceramic cooktop cleaner on the glass cooktop.To maintain and protect the surface of your glass cooktop,follow these steps:

Before using the cooktop for the first time,clean it with ceramic cooktop cleaner.This helps protect the top and makes cleanup easier.

1. Daily use of ceramic cooktop cleaner will help keep the cooktop looking new.

2. Shake the cleaning solution well. Apply a few drops of ceramic cooktop cleaner directly to the cooktop.

3. Use a paper towel or a soft cleaning pad for ceramic cooktops to clean the entire cooktop surface.

4. Use a dry cloth or paper towel to remove all cleaning residue. No need to rinse. Never run the cooktop under water.

NOTE: It is very important that you DO NOT use the cooktop until it has been thoroughly cleaned.

CAUTION: Do not store items of interest to children in cabinets above a range or on the backguard of a range – children climbing on the range to reach items could beseriously injured.

V. Cleaning and Maintenance:

Cleaning Burned on Residue:

WARNING: Damage to the glass surface may occur if you use scrub pads or any other type of abrasive cleaning materials.

1. Allow the cooktop to cool.
2. Spread a few drops of the ceramic cooktop cleaner on the burned residue area.
3. Using the included ceramic cooktop cleaning pad, rub the residue area, applying pressure as needed.
4. If any residue remains,repeat the steps listed above.
5. For additonal protecton,afer all residue has been removed,polish the entre surface with the ceramic cooktop cleaner and a paper towel.

Cleaning heavy burned - on residue:

1. Allow the cooktop to cool.
2. Used a single - edge razor blade scraper approximately at a 45 degree angle against the glass surface,and scrape off the residue.
3. Afer scraping o the residue,apply a few drops of the ceramic cooktop cleaning soluton on the entre burned residue area.Use the cleaning pad to remove any remaining residue.
4. For additonal protecton,afer all residue has been removed,polish the entre surface with the ceramic cooktop cleaner and a paper towel.

Metal Marks and Scratches:

Be careful not to slide pots or pans across the cooktop surface. It will leave behind metal markings. These marks are removable using the ceramic cooktop cleaner along with the cleaning pad for ceramic cooktops

If pots with a thin overlay of aluminum or copper boil dry,the overlay may leave a black discoloraton on the cooktop.This should be removed immediately before using the cooktop again or the discoloraton will be become permanent.

NOTE: If cracks or indentatons in the glass surface occurs,the cooktop glass will have to be replaced.Contact the manufacturer for assistance.

VI.Counter Installation Instructions:

Warning!

For Your Safety:Do not store or use gasoline or other flammable vapors and liquids in the vicinity of this or any other appliance.To eliminate the risk of burns or fire due to overheating,cabinets located above the induction unit should be avoided.If cabinet space is available, the risk can be reduced by installing a range hood that protects horizontally at a minimum of 5 inches below the bottom of the cabinets.

IMPORTANT INSTALLATION INFORMATION

All electric cooktops run off a single phase,three-wire cable,240V/60Hz AC only electrical supply with ground.Minimum distance between cooktop and overhead cabinetry is 36".

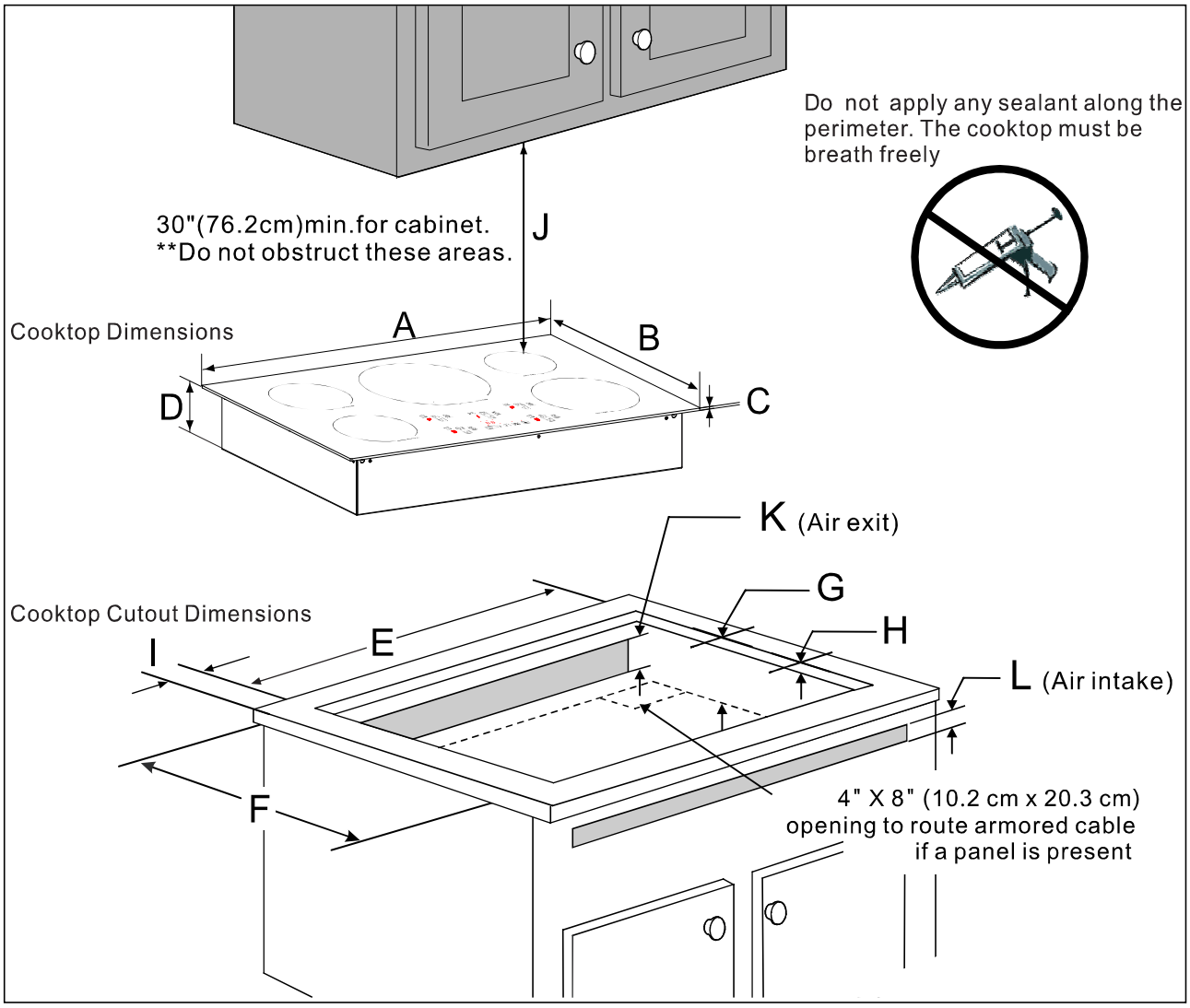

Figure1

VI.Counter Installation Instructions:

Cooktop Dimensions			
A. Width	B. Depth	C. Height	D. Height
36"	21"	5/32"	2-5/32"

Cooktop Cutout Dimensions							
E. Depth	F. Depth	G. Depth	H. Depth	I. Depth	J. Depth	K. Height	L. Height
Minimum:34-14/16″ Maximum:35-7/16″	Minimum:19-21/32″ Maximum:20-1/16"	Minimum:3-11/32"	Minimum:13/32" Maximum:25/32"	Minimum:1-31/32"	Minimum:30"	4-23/32"	1-31/32"

VI.Counter Installation Instructions:

Before installing the cooktop:

1. Visually inspect the cooktop for damage. Also make sure all cooktop screws are on tight.
2. Place the cooktop into the countertop cutout.

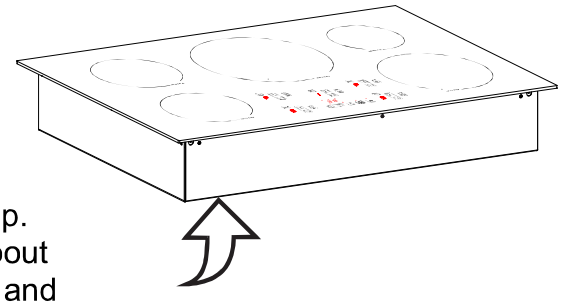

Model and Serial Number Locaton:

The serial plate is located under the cooktop. When ordering parts or making inquiries about your cooktop, be sure to include the model and serial numbers.

Serial plate is located under the burner box of the cooktop.

Connectng to a 3 wire power supply cable electrical system

1. Disconnect the power supply.
2. In the circuit breaker,fuse box,or juncton box,connect appliance and power supply cable wires as shown below.

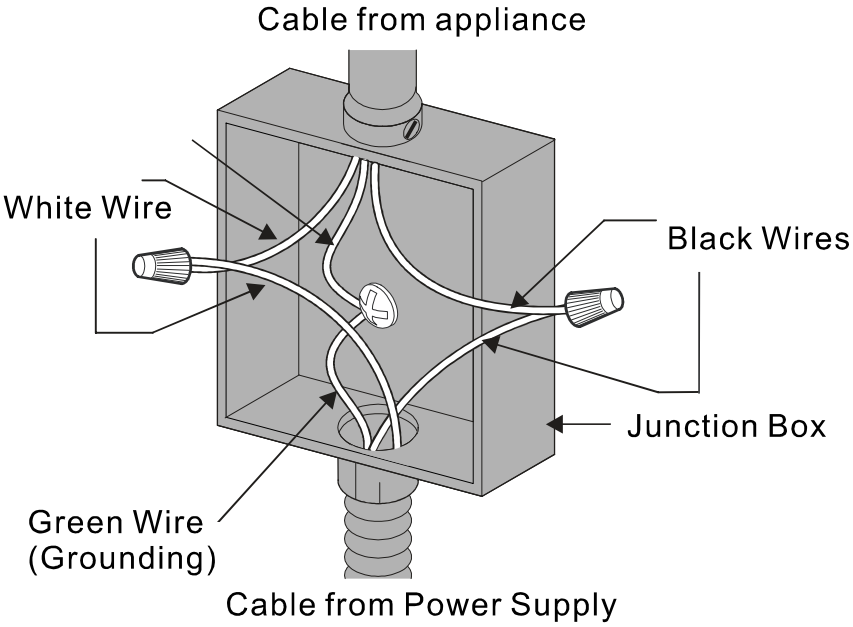

Contnues on next page

VI.Counter Installation Instructions:

Connectng to a 3 wire power supply cable electrical system

3. Circuit breaker fuse ratng must be above 50 A.
4. Minimum acceptable size of conductors should be no less than 10AWG,copper only,and no less than167°F .
5. A wire-binding screw or stud used in the wire terminal should be 10 or larger.

Warning!

1. The electrical power to the cooktop must be shut off while line connectons are being made.Failure to do so could result in serious injury or death.
2. An extension cord must not be used with this appliance.Such use may result in a fire,electrical shock or other personal injury.

VII.Troubleshooting Error Codes

If the display shows an error code,please refer to this sheet for a potential solution.

Error Code	Possible Cause	Solution
Cooktop does not work	• Cooktop controls are locked. • Circuit breaker has tripped or fuse is blown. • Power outage. • Installation wire not complete.	• Make sure Lock mode is turned off. • Reset the circuit breaker or replace the fuse. • Check house lights to confirm power outage. • Contact manufacturer.
Cooktop does not heat up	• No cookware or improper cookware placement on the cooking zone. • Incorrect cookware size for selected cooking zone. • Cookware is not properly resting on the cooking zone. • Incorrect cooking zone detected • No power to cooktop	• Make sure the cookware is centered on the cooking zone, and the cookware is also of correct type for induction cooking. See **Compatible Cookware** page. • The bottom of the cookware must be large enough to cover the cooking zone. • The bottom of the cookware must be flat and centered on the cooking zone. • Make sure the correct control is ON for the cooking zone being used. • See “Cooktop does not work” issue above.
Cooktop turns off while cooking	• Internal cooktop heat sensor has detected high temperatures inside the cooktop, activating automatic shut off. • Liquid or objects placed around the control panel.	• Make sure the cooktop vents are not blocked. • The cooktop features an automatic shut off that turns off the entire cooktop if any of the cooking zones have been on continuously for 2 hours. • The cooktop control panel may read liquids or objects obstructing the panel, which can cause the cooktop to shut off. Clean up spills or remove objects, then restart the unit.
Power boost does not work	• Power boost is being used on multiple cooking zones in addition to using total power of 7400W.	• This is a normal occurrence.
The fans keep running for one minute after the unit has been switched off	• The electronics are cooling down.	• This is a normal occurrence.

VII.Troubleshooting Error Codes

If the display shows an error code,please refer to this sheet for a potential solution.

Error Code	Possible Cause	Soluton
"E" appears on the Power display	• Electronics fault error message of specifc cooking zone.	• See E0,E1,E2,E3,E7,E8,E9,EE
"E0" appears in the Timer display	• IGBT overheating.	• Turn of unit untl to allow IGBT to cool.Restart unit.
"E1" appears in the Timer display	• No cookware found or improper placement of cookware on the cooking zone.	• Make sure the cookware is centered on the cooking zone,and that it's also inducton compatble.See Compatble Cookware.
"E2" appears in the Timer display	• Supplied voltage to cooktop is too low.	• If the voltage of the power supply to the cooktop is too low,it cannot operate properly and will show this error code. This may be caused by reduced voltage being supplied to the house circuit. If the connectons are correct and supplied voltage returns to normal, the code will disappear.
"E3" appears in the Timer display	• Supplied voltage to cooktop is too high.	• If the voltage of the power supply to the cooktop is too high,it cannot operator properly and wil show this error code. This may be caused by increased voltage being supplied to the house circuit.If the connectons are correct and the supplied voltage returns to normal,the code will disappear.
"E7" appears in the Timer display	• NTC1 break of	• Turn OFF the cooktop;then shut of the power at the fuse or circuit breaker for about 30 seconds.Turn the power back on to the cooktop then press the POWER buton to turn on the unit.If the error message is stll being displayed,call for service.
"E8" appears in the Timer display	• NTC1 short circuit	
"E9" appears in the Timer display	• NTC2 break of	
"EE" appears in the Timer display	• NTC2 short circuit	

VIII.FCC STATEMENT:

FCC STATEMENT;

This device complies with Part 18 of the FCC Rules.

NOTE:

1.This equipment has been tested and found to comply with the limits for a Consumer ISM equipment, pursuant to Part 18 of the FCC Rules. These limits are designed to provide reasonable protection against harmful interference in a residential installation. This equipment generates, uses and can radiate radio frequency energy and, if not installed and used in accordance with the instructions, may cause harmful interference to radio communications. However, there is no guarantee that interference will not occur in a particular installation.

2.Please note that changes or modifications of this product is not expressly approved by the party responsible for compliance could void the user's authority to operate the equipment.

3.If this equipment does cause harmful interference to radio or television reception, which can be determined by turning the equipment off and on, the user is encouraged to try to correct the interference by one or more of the following measures:

-- Reorient or relocate the receiving antenna.

-- Increase the separation between the equipment and receiver.

-- Connect the equipment into an outlet on a circuit different from that to which the receiver is connected.

- Consult the dealer or an experienced radio/TV technician for help.