BEMERKUNGEN	NOTES

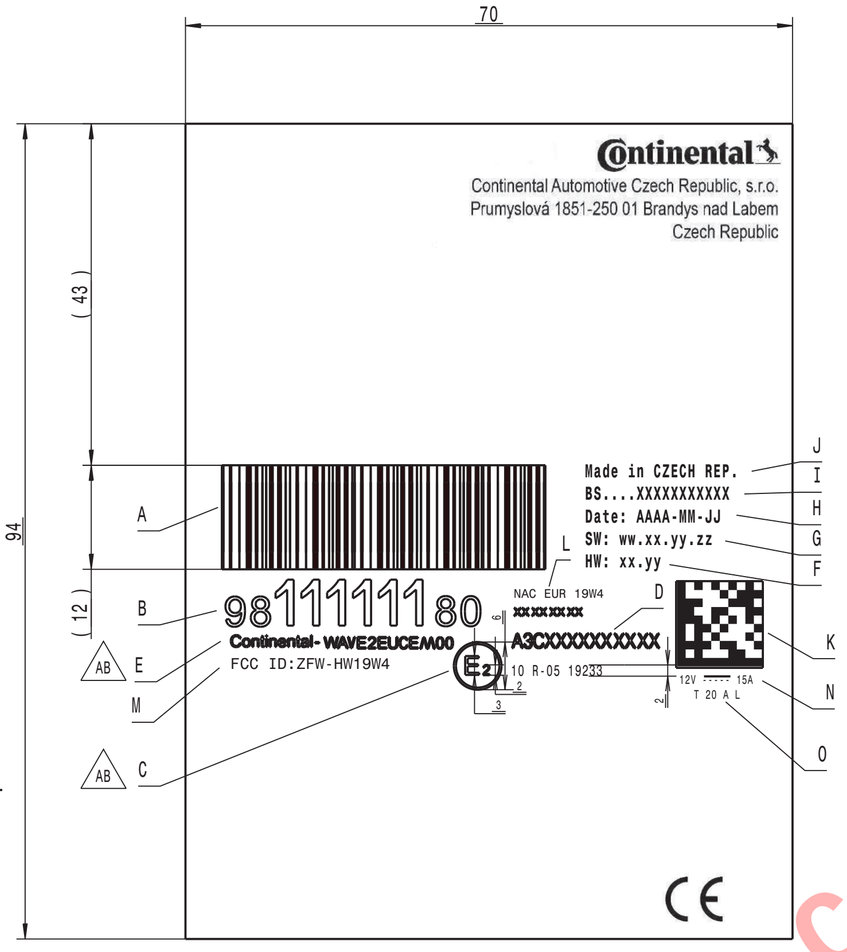

~~1) Serbia's Logo (Xmm x Xmm)~~
~~2) Oman's Logo (10mm x 10mm)~~
~~3) Singapore's Logo (17mm x 9mm)~~
~~4) Philippines's Logo (17mm x 9mm)~~
~~5) Australia's Logo (12mm x 12mm)~~
~~6) UAE's Logo (32mm x 16mm)~~
~~7) Ukraine's Logo (15mm x 15mm)~~
~~8) Zambia's Logo (25mm x 8mm)~~
~~9) Botswana's Logo (25mm x 10mm) - Text height min. 2mm.~~
~~10) Moldova's Logo (10mm x 10mm)~~
~~11) Nigeria's Logo (40mm x 8mm)~~
~~12) Mexico's Logo (16mm x 14mm)~~
~~13) Brazil's Logo (39mm x 16mm)~~
~~14) South Africa's Logo (40mm x 20mm)~~
~~15) Argentina's Logo (45mm x 0.5mm)~~
~~16) Belarus' Logo (15mm x 8mm)~~
~~17) Congo, Democratic Republic (22mm x 10mm)~~
~~18) Indonesia (19mm x 7mm)~~
~~19) Morocco (22mm x 10mm)~~
~~20) Algeria (16mm x 5mm)~~
~~21) Ghana (4mm x 29mm)~~
~~22) Mozambique (22mm x 4mm)~~
~~23) Paraguay (15mm x 3.5mm)~~
~~24) Benin (17mm x 8mm)~~
~~25) Jordan (25mm x 4mm)~~
~~26) Continental's Address (min 1.5mm height)~~
27) CE Logo (5mm height)

Note:

Logo's size as reference only.

Logos and text will be printed
in black (No colours)
on a white label.

For blank label, please refer to A3C0043150000
41241895 DRW 000

		Field	Value	Text height
	A	Barcode region, Code39 (PSA reference)	Na	12mm
	B	PSA reference	XX XXX XXX XX	3.5mm, 5.3mm
AB	C		E 2 10 R-05 19233	6mm, 3mm & 2mm. See above drawing.
	D	Continental reference	A3CXXXXXXXXXX	1.7mm
AB	E	EMC Identification reference	Continental-WAVE2EUCEM00	1.7mm
	F	HW reference	HW: xx.yy	1.3mm
	G	SW reference	SW: ww.xx.yy.zz	1.3mm
	H	Production date	Date: AAAA.MM.JJ	1.3mm
	I	Identification reference / Serial Number	BS...xxxxxxxxxxx	1.3mm
	J	Country of origin	Made in CZECH REP.	1.3mm
	K	QR code region, (Continental reference)	Na	10 X 10mm
	L	Variants / Model Name	XXXXXXXX	1.3mm
	M	FCC ID	FCC ID: ZFW-HW19W4	1.7mm
	N	Voltage & Ampere	12V ----- 15A	1.7mm
	O	Fuse rating	T 20 A L	1.7mm

Note:
Exact content of the below items can be found on the
ECN SharePoint inside the document
"11_PSA_NAC_WAVE_2_Overview_BOM_ECN.xlsx"

Item B (PSA reference)
Item D (Contiental reference)
Item F (HW reference)
Item G (SW reference)
Item L (Variants / Model Name)

Document Link:
https://cws7.conti.de/content/00006838/S4_PSA_NAC_RCC
_Wave2_EU_CN/11_PSA_NAC_WAVE_2_Overview_BOM_ECN.xlsx

DOC. VERS.	CHANGED ITEMS	ZONE IN GRID	CHANGE DESCRIPTION
AB	4	-	ECM xxxxxxxx. Update reference number for E marking
AA	-	-	ECM 10406798. Initial drawing release into SAP.

ECM NO.	10406798		
CREATED BY	Cyrus.Repe.Hornopia	DATE 2019-09-06	DEPARTMENT I IC RD ME SGP D2
REVIEWED BY	[redacted]	DATE [redacted]	DEPARTMENT [redacted]
RELEASED BY	[redacted]	DATE [redacted]	DEPARTMENT [redacted]

TITLE
label HW2019 W4
-
Etikett

DOCUMENT NO.	DOC. TYPE	DOC. PART	DOC. VERS.	MATERIAL NO.
41496942	DRW	000	AB	A3C0551790000

MATERIAL: Please refer to note		CALCULATED WEIGHT: - g +/-- %
SURFACE: -	GENERAL TOLERANCES: -	TOLERANCE PRINCIPLE: Size ISO 14405
3D MODEL: -	DRAWING: 41496942_DRW_000.CATDrawing . AB. 4 In Work	

DIMENSIONS IN MILLIMETERS

Continental

CAD SYSTEM		SCALE	PAGE
-	(C) Continental AG 2019	1:1	1 of 1

THE REPRODUCTION, DISTRIBUTION AND UTILIZATION OF THIS DOCUMENT AS WELL AS THE COMMUNICATION OF ITS CONTENTS TO OTHERS WITHOUT EXPRESS AUTHORIZATION IS PROHIBITED. OFFENDERS WILL BE HELD LIABLE FOR THE PAYMENT OF DAMAGES. ALL RIGHTS RESERVED IN THE EVENT OF THE GRANT OF A PATENT, UTILITY MODEL OR DESIGN.
NO GUARANTEE CAN BE GIVEN IN RESPECT OF THE TRANSLATION. IN ALL CASES THE LATEST ENGLISH LANGUAGE VERSION OF THIS DOCUMENT SHALL BE TAKEN AS AUTHORITATIVE

FORMAT A2

CONFIDENTIAL
CONTINENTAL AUTOMOTIVE RAMBOUILLET FRANCE S.A.S.

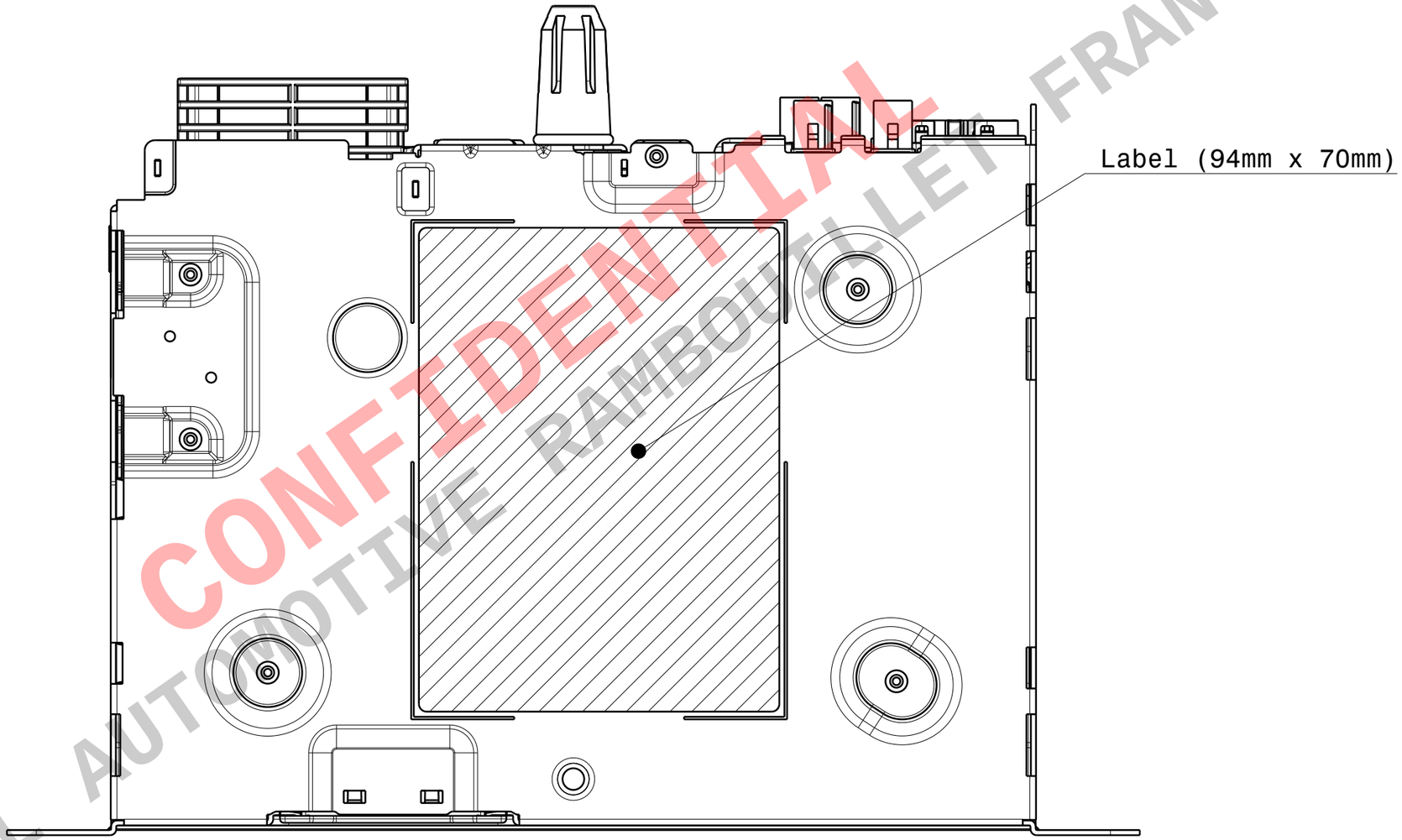

CONFIDENTIAL
CONTINENTAL AUTOMOTIVE RAMBOUILLET FRANCE S.A.S.