SAR TEST REPORT

Applicant	:	GN Audio Taiwan Ltd.
Address	:	4F.-4, No. 186, Jian 1st Rd., Zhonghe Dist., New Taipei City 235603, Taiwan
Equipment	:	Transceiver
Model No.	:	HS40TX
Trade Name	:	steelseries
FCC ID.	:	ZHK-HS40TX

I HEREBY CERTIFY THAT :

The sample was received on Oct. 24, 2024 and the testing was completed on Nov. 25, 2024 at Cerpass Technology Corp. The test result refers exclusively to the test presented test model / sample. Without written approval of Cerpass Technology Corp., the test report shall not be reproduced except in full.

Approved by:

Angelo Chang

Angelo Chang / Supervisor

Laboratory Accreditation:

Cerpass Technology Corporation Test Laboratory

Contents

1. Summary of Maximum SAR Value 5
2. Test Configuration of Equipment under Test 6
3. General Information of Test 7
4. Remarks and comments 8
5. Basic restrictions and Standards 9
5.1 Test Standards 9
5.2 Reference Standards 9
5.3 Environment Condition 10
5.4 RF Exposure Limits 10
6. Test & System Description 11
6.1 SAR Definition 11
6.2 SAR Measurement System 12
6.3 Probes 13
6.4 Data Acquisition Electronics (DAE) 13
6.5 Robot 14
6.6 SAM Phantom 15
6.7 Device Holder 16
6.8 Test Equipment and Ancillaries Used for Tests 17
6.9 Annual Internal Check of Dipole 18
7. The SAR Measurement Procedure 19
7.1 System Performance Check 19
8. SAR Measurement Procedure 23
8.1 Test Procedures 23
8.2 RF Exposure Positions 26
8.3 Measurement Evaluation 27
9. Wi-Fi SAR Exclusion and Results 28
9.1 Measured Conducted Average Power 28
9.2 Antenna Location 29
9.3 SAR Test Results Summary 30
9.4 SAR Measurement Variability 31
10. Simultaneous Transmission Analysis 32
10.1 Co-location 32
10.2 SPLSR Evaluation 32
11. Measurement Uncertainty 33

Appendix A. DASY Calibration Certificate

Appendix B. System Performance Check

Appendix C. Measured Conducted Power

Appendix D. SAR Measurement Data

Appendix E. Photographs of EUT Set up

History of this test report

Attachment No.	Issued Date	Description
24100319-TRFCC06	Jun. 10, 2025	Original

1. Summary of Maximum SAR Value

Results for highest reported SAR values for each frequency band and mode are as below:

HS40TX

Equipment Class	Band	Maximum Report SAR (W/kg)
DTS	SRD	0.66
Limit (W/kg)		1.6

Note:

1. The SAR criteria (Head & Body: SAR-1g1.6 W/kg, and Extremity: SAR-10g 4.0 W/kg) for general population/uncontrolled exposure is specified in FCC 47 CFR part 2 (2.1093) and ANSI/IEEE C95.1-1992 and ISEDRSS 102, Issue 6.
2. According to 47 CFR part 2.1093, the MPE limits specified in part 1.1310 apply to portable devices that transmit at frequencies above 6 GHz. The localized power density limit for general population exposure is 1.0 mW/cm (equal to 10 W/m) for frequency up to 100 GHz.
3. The lab has reduced the uncertainty risk factor from test equipment, environment and staff technicians which according to the standard on contract. Therefore, the test result will only be determined by standard requirement.

2. Test Configuration of Equipment under Test

Operation Frequency Range	2400-2483.5MHz
Center Frequency Range	2402MHz-2480MHz
Modulation Type	FHSS:GFSK,π/4-DQPSK, 8DPSK DTS:GFSK
Modulation Technology	FHSS DTS
Data Rate	FHSS: GFSK: 1Mbps, π/4-DQPSK: 2Mbps, 8DPSK: 3Mbps DTS:GFSK: 1Mbps, GFSK: 2Mbps
Antenna Type	monopole antenna
Antenna Gain	-1.27 dBi
USB-A to USB-C Adapter	Brand: SANJI ELECTRONICS CO, LTD Model: XUC-005ABQ0-N0A1
Firmware Number	R2
Serial Number	v0.0.7

Note:

1. For more details, please refer to the User's manual of the EUT.

3. General Information of Test

Test Site	**Cerpass Technology Corporation Test Laboratory** Address: No.10, Ln. 2, Lianfu St., Luzhu Dist., Taoyuan City 33848, Taiwan (R.O.C.) Tel:+886-3-3226-888 Fax:+886-3-3226-881

Test Item	Test Site	Tested By	Ambient Temperature	Ambient Relative Humidity	Test Period
SAR	RFSAR01-NK	Roy	18°C~ 25°C	30% ~ 70%	2024/11/25

Note:
The SAR measurement facilities used to collect data are within Cerpass SAR Lab list below test site location are accredited to ISO 17025 by Taiwan Accreditation Foundation (TAF code:1439) and the FCC designation No. TW1439 under the FCC 2.948(e) by Mutual Recognition Agreement (MRA) in FCC test.

4. Remarks and comments

Variability and simultaneous transmission results shown in this report are based on the highest SAR value obtained among all antenna manufacturers.

5. Basic restrictions and Standards

5.1 Test Standards

FCC	FCC 47 CFR Part 2 (2.1093) IEEE C95.1
ISED	RSS-102 Issue 6

5.2 Reference Standards

FCC KDB Publication 447498 D01 General RF Exposure Guidance v06
FCC KDB Publication 447498 D04 Interim General RF Exposure Guidance v01
FCC KDB Publication 248227 D01 802.11 Wi-Fi SAR v02r02
FCC KDB Publication 941225D06 Hot Spot SAR v02r01
IEEE 62209-1528 : 2020

5.3 Environment Condition

Item	Target
Ambient Temperature(℃)	18~25
Temperature of Simulant(℃)	20~22
Relative Humidity(%RH)	30~70

5.4 RF Exposure Limits

SAR assessments have been made in line with the requirements of FCC 47CFR Part 2.1093 and ISED RSS 102 issue 6 on the limitation of exposure of the general population / uncontrolled exposure for portable devices.

Exposure Type	General Population / Uncontrolled Environment
Peak spatial-average SAR (averaged over any 1 gram of tissue)	**1.6 W/kg**
Whole body average SAR	**0.08 W/kg**
Peak spatial-average SAR (extremities) (averaged over any 10 grams of tissue)	**4.0 W/kg**

6. Test & System Description

6.1 SAR Definition

Specific Absorption rate is defined as the time derivative of the incremental energy (dW) absorbed by (dissipated in) and incremental mass (dm) contained in a volume element (dV) of a given density (ρ).

$$SAR = \frac{d}{dt} \cdot \left(\frac{dW}{dm}\right) = \frac{d}{dt} \cdot \left(\frac{dW}{\rho \cdot dV}\right)$$

SAR is expressed in units of watts per kilogram (W/kg). SAR can be related to the electric field at a point by

Where:

σ = Conductivity of the tissue (S/m)
ρ = Mass density of the tissue (kg/m3)
E = RMS electric field strength (V/m)

6.2 SAR Measurement System

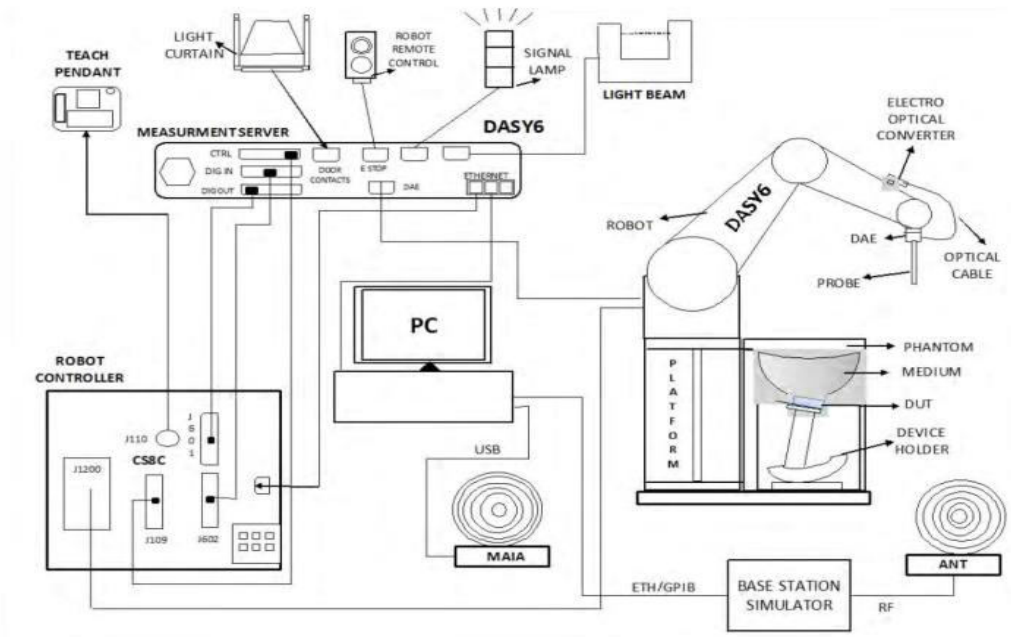

- ✓ A standard high precision 6-axis robot (Staübli TX/RX family) with controller, teach pendant and software. It includes an arm extension for accommodating the data acquisitionelectronics (DAE)
- ✓ An isotropic field probe optimized and calibrated for the targeted measurements.
- ✓ A data acquisition electronics (DAE) which performs the signal amplification, signal multiplexing, AD-conversion, offset measurements, mechanical surface detection, collision detection, etc. The unit is battery powered with standard or rechargeable batteries. The signal is optically transmitted to the EOC.
- ✓ The Electro-optical Converter (EOC) performs the conversion from optical to electrical signals for the digital communication to the DAE. The EOC signal is transmitted to the measurement server.
- ✓ The function of the measurement server is to perform the time critical tasks such as signal filtering, control of the robot operation and fast movements interrupts.
- ✓ The Light Beam used is for probe alignment. This improves the (absolute) accuracy of the probe positioning.
- ✓ A computer running Win10 professional operating system and the cDASY6 and DASY5 V5.2 software.
- ✓ Remote control and teach pendant as well as additional circuitry for robot safety such as warning lamps, etc.
- ✓ The phantom, the device holder and other accessories according to the targeted measurement.

6.3 Probes

The SAR measurement is conducted with the dosimetric probe manufactured by SPEAG. The probe is specially designed and calibrated for use in liquid with high permittivity. The dosimetric probe has special calibration in liquid at different frequency. SPEAG conducts the probe calibration in compliance with international and national standards (e.g. IEEE 1528, EN 62209-1, IEC 62209, etc.) under ISO 17025. The calibration data are in Appendix A.		
Model	EX3DV4	
Construction	Symmetrical design with triangular core Built-in shielding against static charges PEEK enclosure material (resistant to organic solvents, e.g., DGBE)	
Frequency	4 MHz to 10 GHz Linearity: ± 0.2 dB (30 MHz to 10 GHz)	
Directivity	± 0.1 dB in TSL (rotation around probe axis) ± 0.3 dB in TSL (rotation normal to probe axis)	
Dynamic Range	10 µW/g to 100 mW/g Linearity: ± 0.2 dB (noise: typically < 1 µW/g)	
Dimensions	Overall length: 330 mm (Tip: 20 mm) Tip diameter: 2.5 mm (Body: 12 mm) Typical distance from probe tip to dipole centers: 1 mm	

6.4 Data Acquisition Electronics (DAE)

Model	DAE4	
Construction	Signal amplifier, multiplexer, A/D converter and control logic. Serial optical link for communication with DASY embedded system (fully remote controlled). Two step probe touch detector for mechanical surface detection and emergency robot stop.	
Measurement Range	-100 to +300 mV (16 bit resolution and two range settings: 4 mV, 400 mV)	
Input Offset Voltage	< 5 µV (with auto zero)	
Input Bias Current	Input Bias Current	
Dimensions	60 x 60 x 68 mm	

6.5 Robot

The DASY5 system uses the high precision robots TX60 L type out of the newer series from Stäubli SA (France). For the 6-axis controller DASY6 system, the CS8C robot controller version from Stäubli is used. The XL robot series have many features that are important for our application: ■ High precision (repeatability 0.02 mm) ■ High reliability (industrial design) ■ Jerk-free straight movements ■ Low ELF interference (the closed metallic construction shields against motor control fields) ■ 6-axis controller	

6.6 SAM Phantom

The SAM twin phantom is a fiberglass shell phantom with 2mm shell thickness (except the ear region where shell thickness increases to 6mm). It has three measurement areas: ■ Left head ■ Right head ■ Flat phantom	
The ELI4 Phantom also is a fiberglass shell phantom with 2mm shell thickness. It has 30 liters filling volume, and with a dimension of 600mm for major ellipse axis, 400mm for minor axis. It is intended for compliance testing of handheld and body-mounted wireless devices in frequency range of 30 MHz to 6GHz. ELI4 is fully compatible with standard and all known tissue simulating liquids.	
The bottom plate contains three pair of bolts for locking the device holder. The device holder positions are adjusted to the standard measurement positions in the three sections. A white cover is provided to tap the phantom during off-periods to prevent water evaporation and changes in the liquid parameters. On the phantom top, three reference markers are provided to identify the phantom position with respect to the robot.	

6.7 Device Holder

The DASY5 device holder is designed to cope with different positions given in the standard. It has two scales for the device rotation (with respect to the body axis) and the device inclination (with respect to the line between the ear reference points). The rotation center for both scales is the ear reference point (EPR).Thus the device needs no repositioning when changing the angles. The DASY5 device holder has been made out of low-loss POM material having the following dielectric parameters: relative permittivity εr =3 and loss tangent δ = 0.02. The amount of dielectric material has been reduced in the closest vicinity of the device, since measurements have suggested that the influence of the clamp on the test results could thus be lowered.	
The laptop extension is lightweight and made of POM, acrylic glass and foam. It fits easily on upper part of the mounting device in place of the phone positioned. The extension is fully compatible with the SAM Twin and ELI phantoms.	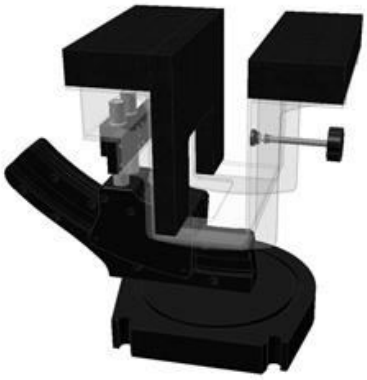

6.8 Test Equipment and Ancillaries Used for Tests

Test Item	SAR				
Test Site	RFSAR01-NK				
Name of Equipment	Manufacturer	Type/Model	Serial No	Calibration Cycle(year)	Valid Date
Robot	Staubli	TX60L Lspeag	F13/5P6VA1/A/01	/	NA
DASY Test Software	Staubli	cDASY6 V16.0.2.136	/	/	NA
Signal Grenerator	KEYSIGHT	N5183A	MY50142931	1	2025/02/15
S-Parameter Network Analyzer	Agilent	E5071C	70045-459-220-350	1	2025/08/14
Dielectric parameter probes	SPEAG	DAKS-3.5	1121	1	NA
Power Meter	Anritsu	ML2495A	1224005	1	2025/02/16
Power Sensor	Anritsu	MA2411B	1207295	1	2025/02/16
Power Meter	Anritsu	ML2495A	2034001	1	2025/08/15
Power Sensor	Anritsu	MA2411B	1911175	1	2025/08/15
Data Acquisition Electronics	SPEAG	DAE4	1379	1	2025/08/06
Dosimetric E-Field Probe	SPEAG	EX3DV4	3927	1	2025/07/30
Dosimetric E-Field Probe	SPEAG	EUmmWV3	9631	1	2025/06/11
2450MHz System Validation Dipole	SPEAG	D2450V2	914	3	2027/07/09
Amplifier	Mini-Circuits	ZVE-8G+	70501814	/	NA
Amplifier	Mini-Circuits	ZVE-3W-183+	N636102230	/	NA
Thermometer	Hi Sun	TH05A	11442	1	2025/03/27

*Please Refer to the Appendix A. DASY Calibration Certificate.

Note:

1. Prior to system verification and validation, the path loss from the signal generator to the system check source and the power meter, which includes the amplifier, cable, attenuator and directional coupler, was measured by the network analyzer. The reading of the power meter was offset by the path loss difference between the path to the power meter and the path to the system check source to monitor the actual power level fed to the system check source.

6.9 Annual Internal Check of Dipole

N/A

Note:

1. Referring to KDB 865664 D01v01r04, the dipole calibration interval can be extended to 3years with justification. The dipoles are also not physically damaged, or repaired during the interval.
2. The justification data of dipole can be found in Appendix B. The return loss is < -20dB, within 20% of prior calibration, the impedance is within 5 ohm of prior calibration

7. The SAR Measurement Procedure

7.1 System Performance Check

7.1.1 Purpose

1. To verify the simulating liquids are valid for testing.
2. To verify the performance of testing system is valid for testing.

7.1.2 Tissue Dielectric Parameters for Head Phantoms

For SAR measurement of the field distribution inside the phantom, the phantom must be filled with homogeneous tissue simulating liquid to a depth of at least 15 cm. For head SAR testing, the liquid height from the ear reference point (ERP) of the phantom to the liquid top surface is larger than 15 cm. For body SAR testing, the liquid height from the center of the flat phantom to the liquid top surface is larger than 15 cm. The nominal dielectric values of the tissue simulating liquids in the phantom and the tolerance of 10 % are listed in Table.

<Tissue Dielectric Parameters in IEEE 1528-2013 and IEC/IEEE 62209-1528>

Frequency (MHz)	Target Permittivity	Range of ±10 %	Target Conductivity	Range of ±10 %
450	43.5	39.2 ~ 47.9	0.87	0.78 ~ 0.96
750	41.9	37.7 ~ 46.1	0.89	0.80 ~ 0.98
835	41.5	37.4 ~ 45.7	0.90	0.81 ~ 0.99
900	41.5	37.4 ~ 45.7	0.97	0.87 ~ 1.07
1450	40.5	36.5 ~ 44.6	1.20	1.08 ~ 1.32
1500	40.4	36.4 ~ 44.4	1.23	1.11 ~ 1.35
1640	40.2	36.2 ~ 44.2	1.31	1.18 ~ 1.44
1750	40.1	36.1 ~ 44.1	1.37	1.23 ~ 1.51
1800	40.0	36.0 ~ 44.0	1.40	1.26 ~ 1.54
1900	40.0	36.0 ~ 44.0	1.40	1.26 ~ 1.54
2000	40.0	36.0 ~ 44.0	1.40	1.26 ~ 1.54
2100	39.8	35.8 ~ 43.8	1.49	1.34 ~ 1.64
2300	39.5	35.6 ~ 43.5	1.67	1.50 ~ 1.84
2450	39.2	35.3 ~ 43.1	1.80	1.62 ~ 1.98
2600	39.0	35.1 ~ 42.9	1.96	1.76 ~ 2.16
3000	38.5	34.7 ~ 42.4	2.40	2.16 ~ 2.64
3500	37.9	34.1 ~ 41.7	2.91	2.62 ~ 3.20
4000	37.4	33.7 ~ 41.1	3.43	3.09 ~ 3.77
4500	36.8	33.1 ~ 40.5	3.94	3.55 ~ 4.33
5000	36.2	32.6 ~ 39.8	4.45	4.01 ~ 4.90
5200	36.0	32.4 ~ 39.6	4.66	4.19 ~ 5.13
5400	35.8	32.2 ~ 39.4	4.86	4.37 ~ 5.35
5600	35.5	32.0 ~ 39.1	5.07	4.56 ~ 5.58
5800	35.3	31.8 ~ 38.8	5.27	4.74 ~ 5.80
6000	35.1	31.6 ~ 38.6	5.48	4.93 ~ 6.03
6500	34.5	31.1 ~ 38.0	6.07	5.46 ~ 6.68
7000	33.9	30.5 ~ 37.3	6.65	5.99 ~ 7.32

Note:

1.According to April 2019 TCB workshop, Effective February 19,2019,FCC has permitted the use of single head-tissue simulating liquid specified in IEC 62209-1 for all SAR tests.

7.1.3 Tissue Calibration Result

■ The dielectric parameters of the liquids were verified prior to the SAR evaluation using DASY5 Dielectric Assessment Kit and Agilent Vector Network Analyzer E5071C.

Please Refer to the Appendix B System Performance Check.

Note:
For SAR measurement of the field distribution inside the phantom, the phantom must be filled with homogeneous tissue simulating liquid to a depth of at least 15 cm. For head SAR testing, the liquid height from the ear reference point (ERP) of the phantom to the liquid top surface is larger than 15 cm. For body SAR testing, the liquid height from the center of the flat phantom to the liquid top surface is larger than 15 cm.
The nominal dielectric values of the tissue simulating liquids in the phantom and the tolerance of 10 %

7.1.4 System Performance Check Procedure

The system performance check verifies that the system operates within its specifications.System and operator errors can be detected and corrected. It is recommended that the system performance check be performed prior to any usage of the system in order to guarantee reproducible results. The system performance check uses normal SAR measurements in a simplified setup with a well characterized source. This setup was selected to give a high sensitivity to all parameters that might fail or vary over time. The system check does not intend to replace the calibration of the components, but indicates situations where the system uncertainty is exceeded due to drift or failure. In the simplified setup for system check, the EUT is replaced by a calibrated dipole and the power source is replaced by a controlled continuous wave generated by a signal generator. The calibrated dipole must be placed beneath the flat phantom section of the phantom at the correct distance

First, the power meter PM1 (including attenuator Att1) is connected to the cable to measure the forward power at the location of the connector (x) to the system check source. The signal generator is adjusted for the desired forward power at the connector as read by power meter PM1 after attenuation Att1 and also as coupled through Att2 to PM2. After connecting the cable to the source, the signal generator is readjusted for the same reading at power meter PM2. SAR results are normalized to a forward power of 1W to compare the values with the calibration reports results as described at IEC/IEEE 62209-1528:2020 standard.

7.1.5 System Performance Check Setup

The system check verifies that the system operates within its specifications. It is performed daily or before every SAR measurement.The system check uses normal SAR measurements in the flat section of the phantom with a matched dipole at a specified distance. The system verification setup is shown as below.

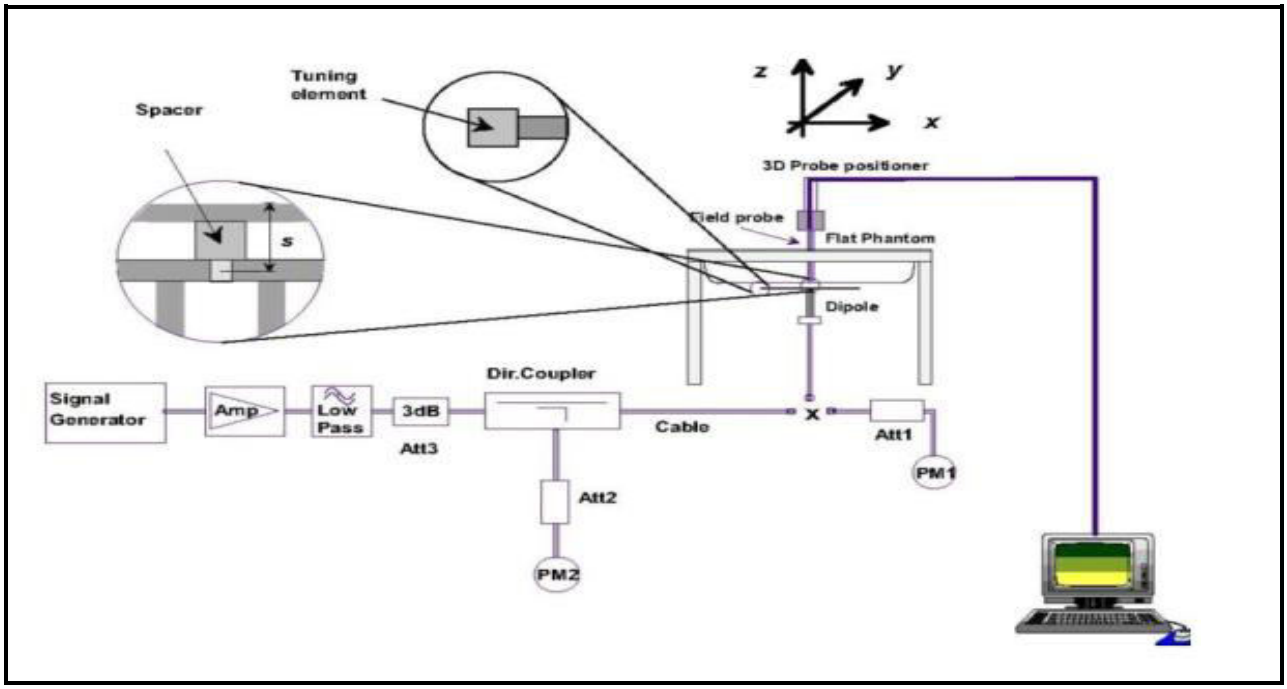

7.1.6 Validation Dipoles

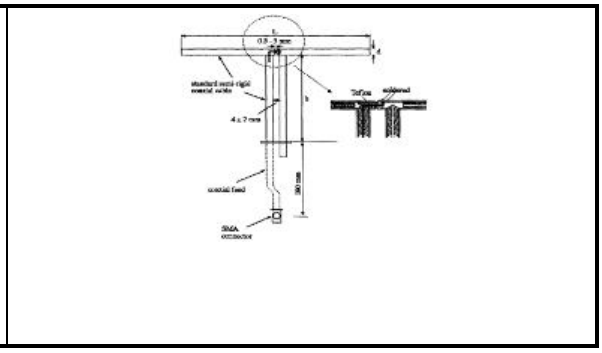

7.1.7 Result of System Performance Check: Valid Result

Please Refer to the Appendix B System Performance Check.

8. SAR Measurement Procedure

8.1 Test Procedures

Step 1 Setup a Connection

First, engineer should record the conducted power before the test. Then establish a call in handset at the maximum power level with a base station simulator via air interface, or make the EUT estimate by itself in testing band. Place the EUT to the specific test location. After the testing, must export SAR test data by SEMCAD. Then writing down the conducted power of the EUT into the report, also the SAR values tested.

Step 2 Power Reference Measurements

To measure the local E-field value at a fixed location which value will be taken as a reference value for calculating a possible power drift.

Step 3 Area Scan

First area scan is used to locate the approximate location(s) of the local peak SAR value(s). The measurement grid within an area scan is defined by the grid extent, grid step size and grid offset. Next, in order to determine the EM field distribution in a three-dimensional spatial extension, zoom scan is required. The zoom scan is performed around the highest E-field value to determine the averaged SAR-distribution.

Measure the local SAR at a test point at 1.4 mm of the inner surface of the phantom recommended by SEPAG.The area scan (two-dimensional SAR distribution) is performed cover at least an area larger than the projection of the EUT or antenna. The measurement resolution and spatial resolution for interpolation shall be chosen to allow identification of the local peak locations to within one-half of the linear dimension of the corresponding side of the zoom scan volume. Following table provides the measurement parameters required for the area scan.

Parameter	$f \leqq$ 3 GHz	3 GHz < $f \leqq$ 10 GHz
Maximum distance from closest measurement point to phantom surface	5 ± 1	δ ln(2)/2 ±0.5
Maximum probe angle from probe axis to phantom surface normal at the measurement location	5° for flat phantom 30° for other phantom	5° for flat phantom 20° for other phantom
Maximum area scan spatial resolution: Δx_{Area}, Δy_{Area}	≦2 GHz: ≦15 mm 2 – 3 GHz: ≦12 mm	3 – 4 GHz: ≦12 mm 4 – 6 GHz: ≦10 mm 6 – 7 GHz: ≦7.5 mm

From the scanned SAR distribution, identify the position of the maximum SAR value, in addition identify the positions of any local maxima with SAR values within 2 dB of the maximum value that will not be within the zoom scan of other peaks. Additional peaks shall be measured only when the primary peak is within 2 dB of the SAR compliance limit
(e.g. 1 W/kg for 1.6 W/kg, 1 g limit; or 1.26 W/kg for 2 W/kg, 10 g limit).

Step 4 Zoom Scan

The zoom scan (three-dimensional SAR distribution) is performed at the local maxima locations identified in previous area scan procedure. The zoom scan volume must be larger than the required minimum dimensions. When graded grids are used, which only applies in the direction normal to the phantom surface, the initial grid separation closest to the phantom surface and subsequent graded grid increment ratios must satisfy the required protocols. The 1-g SAR averaging volume must be fully contained within the zoom scan measurement volume boundaries; otherwise, the measurement must be repeated by shifting or expanding the zoom scan volume. The similar requirements also apply to 10-g SAR measurements. Following table provides the measurement parameters required for the zoom scan.

Parameter		$f \leq$ 3 GHz	3 GHz < $f \leq$ 10 GHz
Maximum zoom scan spatial resolution: Δx_{Zoom}, Δy_{Zoom}		≦2 GHz: ≦8 mm 2 – 3 GHz: ≦5 mm	3 – 4 GHz: ≦5 mm 4 – 6 GHz: ≦4 mm 6 – 7 GHz: ≦3.4 mm
Maximum zoom scan spatial resolution, normal to phantom surface	*uniform grid:* $\Delta z_{Zoom}(n)$	≦5 mm	3 – 4 GHz: ≦4 mm 4 – 5 GHz: ≦3 mm 5 – 6 GHz: ≦2 mm 6 – 7 GHz: ≦2 mm
	graded grids: $\Delta z_{Zoom}(1)$	≦4 mm	3 – 4 GHz: ≦3.0 mm 4 – 5 GHz: ≦2.5 mm 5 – 6 GHz: ≦2.0 mm 6 – 7 GHz: ≦1.7 mm
	$\Delta z_{Zoom}(n>1)$	≦1.5·$\Delta z_{Zoom}(n-1)$ mm	
Minimum zoom scan volume (x, y, z)		≥30 mm	3 – 4 GHz: ≥28 mm 4 – 5 GHz: ≥25 mm 5 – 6 GHz: ≥22 mm 6 – 7 GHz: ≥22 mm

Per IEC 62209-1528:2020, the successively higher resolution zoom scan is required if the zoom scan measured as defined above complies with both of the following criteria, or if the peak spatial-average SAR is below 0.1 W/kg, no additional measurements are needed:

(1) The smallest horizontal distance from the local SAR peaks to all points 3 dB below the SAR peak shall be larger than the horizontal grid steps in both x and y directions (Δx, Δy). This shall be checked for the measured zoom scan plane conformal to the phantom at the distance zM1.

(2) The ratio of the SAR at the second measured point (M2) to the SAR at the closest measured point (M1) at the x-y location of the measured maximum SAR value shall be at least 30 %.

If one or both of the above criteria are not met, the zoom scan measurement shall be repeated using a finer resolution.

New horizontal and vertical grid steps shall be determined from the measured SAR distribution so that the above criteria are met. Compliance with the above two criteria shall be demonstrated for the new measured zoom scan.

Step 5 Power Drift Measurements

Repetition of the E-field measurement at the fixed location mentioned in Step 1 to make sure the two results differ by less than ± 0.2 dB.

8.2 RF Exposure Positions

8.2.1 DUTs with alternative form factor

The basic principles identified and specified in 7.2.4 may be applied to devices with similar form factors. Wireless headsets (e.g. connected by Bluetooth) are examples of head-mounted devices that may be evaluated by applying these principles.

The geometry and coordinate mapping system shown in Figure 18 is applicable. Point A, being the acoustic output, is located at the mid-point of the width, and point B, being the primary microphone, is located at the bottom of the device (the end closest to the mouth). Note that for the purpose of applying the positioning procedures, the DUT is considered to be a conventional bar type (rectangular, cuboid) form factor.

Prior to using 7.2.7, consideration shall be made of the available operating modes and the maximum operating power levels, because some devices might not require testing.

All details relating to alternative form factor DUTs shall be fully documented in the measurement report, including diagrams or photographs. Sound engineering practice shall be applied to implement the mapping of an alternate form factor device.

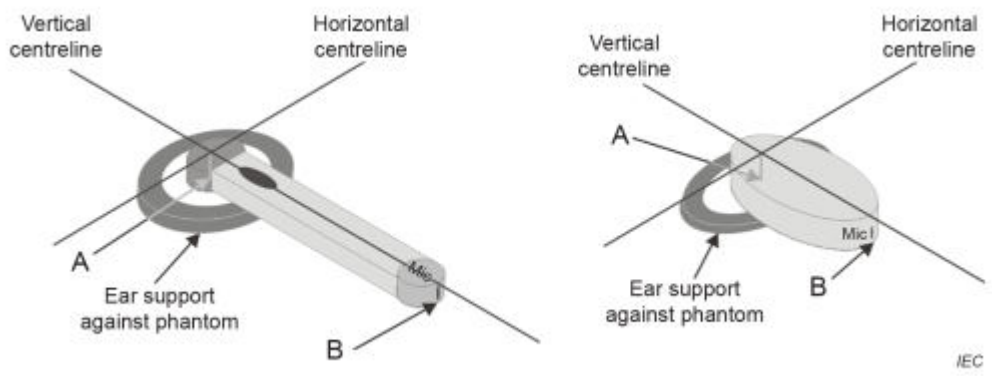

An alternative form factor DUT with reference points and reference lines

8.3 Measurement Evaluation

<WLAN >

Initial Test Configuration

An initial test configuration is determined for OFDM transmission modes in 2.4 GHz and 5 GHz bands according to the channel bandwidth, modulation and data rate combination(s) with the highest maximum output power specified for production units in each standalone and aggregated frequency band. When the same maximum power is specified for multiple transmission modes in a frequency band, the largest channel bandwidth, lowest order modulation, lowest data rate and lowest order 802.11a/g/n/ac mode is used for SAR measurement, on the highest measured output power channel in the initial test configuration, for each frequency band.

Subsequent Test Configuration

SAR measurement requirements for the remaining 802.11 transmission mode configurations that have not been tested in the initial test configuration are determined separately for each standalone and aggregated frequency band, in each exposure condition, according to the maximum output power specified for production units. Additional power measurements may be required to determine if SAR measurements are required for subsequent highest output power channels in a subsequent test configuration. When the highest reported SAR for the initial test configuration according to the initial test position or fixed exposure position requirements, is adjusted by the ratio of the subsequent test configuration to initial test configuration specified maximum output power and the adjusted SAR is ≤ 1.2 W/kg, SAR is not required for that subsequent test configuration.

SAR Test Configuration and Channel Selection

When multiple channel bandwidth configurations in a frequency band have the same specified maximum output power, the initial test configuration is using largest channel bandwidth, lowest order modulation, lowest data rate, and lowest order 802.11 mode (i.e., 802.11a is chosen over 802.11n then 802.11ac or 802.11g is chosen over 802.11n).After an initial test configuration is determined, if multiple test channels have the same measured maximum output power, the channel chosen for SAR measurement is determined according to the following.

1) The channel closest to mid-band frequency is selected for SAR measurement.

2) For channels with equal separation from mid-band frequency; for example, high and low channels or two mid-band channels, the higher frequency (number) channel is selected for SAR measurement.

9. Wi-Fi SAR Exclusion and Results

9.1 Measured Conducted Average Power

Please Refer to the Appendix C Measured Conducted Power.

9.2 Antenna Location

(HS40TX)

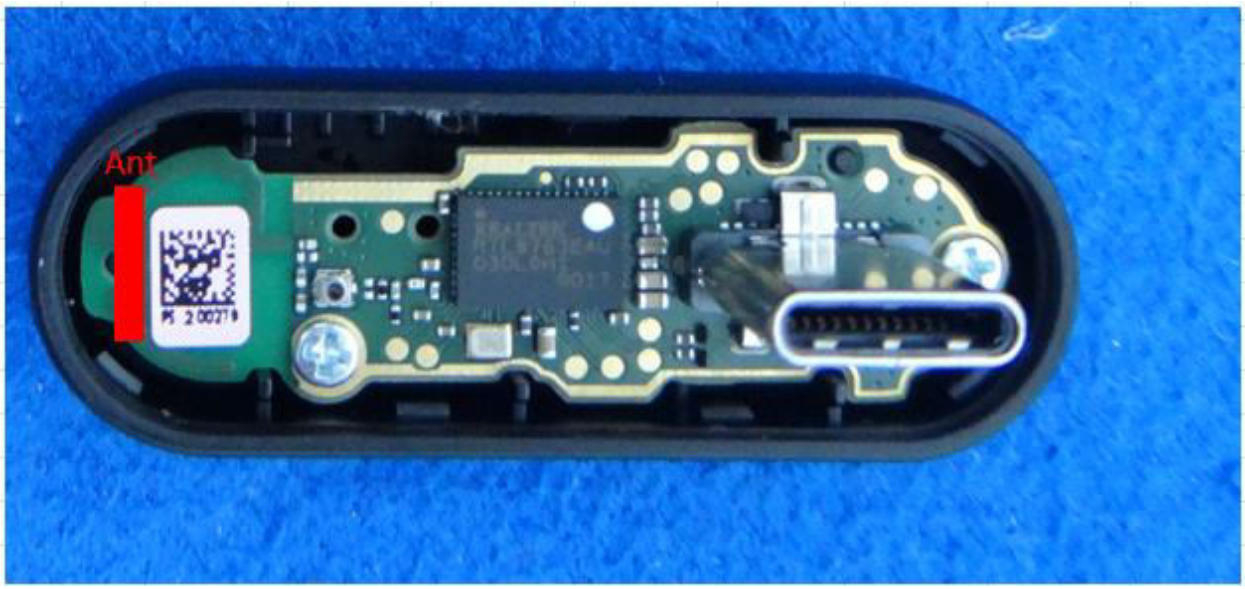

Antennas	Wireless Interface
Ant	SRD

9.3 SAR Test Results Summary

Please Refer to the Appendix D SAR measurement data.

General Note:

1. Per KDB 447498 D01v06, the reported SAR is the measured SAR value adjusted for maximum tune-up tolerance.

a. Tune-up scaling Factor = tune-up limit power (mW) / EUT RF power (mW), where tune-up limit is the maximum rated power among all production units.

b. For SAR testing of WLAN signal with non-100% duty cycle, the measured SAR is scaled-up by the duty cycle scaling factor which is equal to "1/(duty cycle)"

c. For WWAN: Reported SAR(W/kg)= Measured SAR(W/kg)*Tune-up Scaling Factor

d. For WLAN/Bluetooth: Reported SAR(W/kg)= Measured SAR(W/kg)* Duty Cycle scaling factor * Tune-up scaling factor

2. Per KDB 447498 D01v06, for each exposure position, testing of other required channels within the operating mode of a frequency band is not required when the reported 1-g or 10-g SAR for the mid-band or highest output power channel is:

- ≤ 0.8 W/kg or 2.0 W/kg, for 1-g or 10-g respectively, when the transmission band is ≤ 100 MHz
- ≤ 0.6 W/kg or 1.5 W/kg, for 1-g or 10-g respectively, when the transmission band is between 100 MHz and 200 MHz
- ≤ 0.4 W/kg or 1.0 W/kg, for 1-g or 10-g respectively, when the transmission band is ≥ 200 MHz

3. Per KDB 865664 D01v01r04, for each frequency band, repeated SAR measurement is required only when the measured SAR is ≥0.8W/kg.

WLAN Note:

1. Per KDB248227 D01 v02r02 section 5.2.1 2), when the reported SAR is > 0.8 W/kg, SAR is required for that exposure configuration using the next highest measured output power channel. When any reported SAR is > 1.2 W/kg, SAR is required for the third channel; i.e., all channels require testing.
2. When the highest reported SAR for DSSS is adjusted by the ratio of OFDM to DSSS specified maximum output power and the adjusted SAR is ≤ 1.2 W/kg, 802.11g/n OFDM SAR is not required, per KDB248227 D01 v02r01 section 5.2.2 2).

9.4 SAR Measurement Variability

According to KDB 865664 D01v01r04, SAR measurement variability must be assessed for each frequency band, which is determined by the SAR probe calibration point and tissue-equivalent medium used for the device measurements. When both head and body tissue-equivalent media are required for SAR measurements in a frequency band, the variability measurement procedures should be applied to the tissue medium with the highest measured SAR, using the highest measured SAR configuration for that tissue-equivalent medium. The following procedures are applied to determine if repeated measurements are required:

1. The original highest measured Reported SAR 1-g is ≧ 0.80 W/kg, repeated that measurement once.
2. Perform a second repeated measurement the ratio of the largest to the smallest SAR for the original and first repeated measurements is <1.2 W/kg, or when the original or repeated measurement is ≧ 1.45 W/kg (~10% from the 1-g SAR limit).

N/A

10. Simultaneous Transmission Analysis

1. The reported SAR summation is calculated based on the same configuration and test position.

8. Per KDB 447498 D01v06, simultaneous transmission SAR is compliant if,

i)Scalar SAR summation < 1.6W/kg.

ii)SPLSR = (SAR1 + SAR2)^1.5 / (min. separation distance, mm), and the peak separation distance is determined from the square root of [(x1-x2)2 + (y1-y2)2 + (z1-z2)2], where (x1, y1, z1) and (x2, y2, z2) are the coordinates of

the extrapolated peak SAR locations in the zoom scan.

iii)If SPLSR ≤ 0.04, simultaneously transmission SAR measurement is not necessary.

iv)Simultaneously transmission SAR measurement, and the reported multi-band SAR < 1.6W/kg.

v) The SPLSR calculated results please refer to section 8.2.

10.1 Co-location

N/A

10.2 SPLSR Evaluation

N/A

11. Measurement Uncertainty

Body SAR Uncertainty Budget for Frequency Range (2 GHz- 6 GHz range)								
Source Uncertainty	Uncertainty Value (±%)	Probability	Divisor	(Ci) 1g	(Ci) 10g	Standard Uncertainty (±%)	Standard Uncertainty (10g) (±%)	(Vi) Veff
Measurement System errors								
Probe Calibration	13.10	N	2	1	1	6.6	6.6	∞
Probe Calibration Drift	1.70	N	1.732	1	1	1.0	1.0	∞
Probe Linearity	4.70	R	1.732	1	1	2.7	2.7	∞
Broadband Signal	2.80	N	1.732	1	1	1.6	1.6	∞
Probe Isotropy	7.60	R	1.732	1	1	4.4	4.4	∞
DAE	0.30	N	1	1	1	0.3	0.3	∞
RF Ambient	1.80	N	1	1	1	1.8	1.8	∞
Probe Positioning	0.36	N	1	0.67	0.67	0.2	0.2	∞
Data Processing	2.30	N	1	1	1	2.3	2.3	∞
phantom and device errors								
Conductivity (meas.) DAK	2.50	N	1	0.78	0.71	2.0	1.8	∞
Conductivity (temp.) BB	2.40	R	1.732	0.78	0.71	1.1	1.0	∞
Phantom Permittivity	7.60	R	1.732	0.5	0.5	2.2	2.2	∞
Distance DUT–TSL	2.00	N	1	2	2	4.0	4.0	∞
Device Positioning	0.02	N	1	1	1	0.0	0.0	∞
Device Holder	3.60	N	1	1	1	3.6	3.6	∞
DUT Modulation	2.40	R	1.732	1	1	1.4	1.4	∞
DUT drift	2.50	N	1	1	1	2.5	2.5	∞
Correction to the SAR results								
Deviation to Target	0.06	N	1	1	0.84	0.1	0.1	∞
Combined Std. Uncertainty						11.3%	11.3%	
Coverage Factor for 95 %						K=2	K=2	
Expanded STD Uncertainty						22.7%	22.6%	

----------THE END OF REPORT----------

Appendix A. DASY Calibration Certificate