BOSSPAC™ ENGINEERING & TECHNOLOGY

WASP

WASP-P™

PRESSURE SENSOR

USER MANUAL

VERSION 03.21
26/02/2016

WASP™ is a registered trademark owned by BossPac Engineering & Technology

WASP™ is a PATENT PENDING technology owned by BossPac Engineering & Technology

BossPac Engineering & Technology

1450 – 28 Street NE Bay 8, Calgary, Alberta, Canada T2A 7W6

Phone: (403) 216-1226 Fax: (403) 216-5557 E-Mail: info@bosspac.com

Visit our website for more information www.bosspac.com

WARNING

READ THIS MANUAL BEFORE OPERATING THIS DEVICE.

MISE EN GARDE

LISEZ LE MANUEL AVANT UTILISATER

WARNING

TO PREVENT EQUIPMENT FAILURE, AND/OR DAMAGE, AND/OR PERSONAL INJURY, REGULAR CALIBRATION AND INSPECTION OF THIS DEVICE IS REQUIRED.

MISE EN GARDE

POUR PRÈVENIR LE DOMMAGE À L'EQUIPMENT, ET/AU AUX PERSON, LA CÀLIBRATION ET L'INSPECTION REGULIER EST ŔEQUIS.

WARNING - EXPLOSION HAZARD

SUBSTITUTION OF COMPONENTS MAY IMPAIR SUITABILITY FOR CLASS 1, DIVISION 2

AVERTISSEMENT – RISQUE D'EXPLOSION

LA SUBSTITUTION DECOMPOSANTS RENDRE CE MATÉRIEL INACCEPTABLE POUR LES EMPLACEMENTS DE CLASSE 1, DIVISION 2

WARNING - EXPLOSION HAZARD

DO NOT REMOVE BATTERIES UNLESS AREA IS KNOWN TO BE NON-HAZARDOUS.

AVERTISSEMENT - RISQUE D'EXPLOSION

AFIN D'ÉVITER TOUT RISQUE D'EXPLOSION, S'ASSURER QUE L'EMPLACEMENT EST DÉSIGNÉ NON DANGEREUX AVANT CHANGER LA BATTERIE.

Table of Contents

1 Introduction ..... - 5 -

2 Installation ..... - 5 -

2.1. Assembling of Wireless Sensor Pucks ..... - 5 -

2.1.1. Battery Installation ..... - 5 -

2.1.2. Cap and Gasket Installation ..... - 6 -

2.1.3. WASP-P™ LED Error Indicator ..... - 6 -

2.2. Placement Of The WASP-P™ Pucks ..... - 7 -

2.2.1. WASP-P™ Mounting ..... - 7 -

3 Troubleshooting WASP LED Flash Codes ..... - 8 -

3.1. LED Flash Codes ..... - 8 -

3.2. What To Do When An Error Is Reported ..... - 9 -

3.3. Contact Info ..... - 9 -

1 Introduction

This Operations Manual provides basic information on how to operate the **WASP-P™.**

This manual covers the following topics:

- Installation of WASP-P™
- Assembling of WASP-P™
- Placement of WASP-P™
- Troubleshooting

2 Installation

2.1. Assembling of Wireless Sensor Pucks

2.1.1. Battery Installation

Each sensor puck is shipped with a separate battery circuit board. The battery circuit board contains a non-removable long lasting lithium battery.

WARNING – USE ONLY WITH REPLACEABLE BATTERY BOSSPAC EA000166

WARNING – EXPLOSION HAZARD. DO NOT REMOVE BATTERIES UNLESS AREA IS KNOWN TO BE NON-HAZARDOUS.

AVERTISSEMENT – RISQUE D'EXPLOSION. AFIN D'ÉVITER TOUT RISQUÉ D'EXPLOSION, S'ASSURER QUE L'EMPLACEMENT EST DÉSIGNÉ NON DANGEREUX AVANT CHANGER LA BATTERIE.

To turn on and activate each sensor puck you must carefully attach the battery board to the sensor unit. Plug the pins on the battery board into the corresponding sockets on the sensor puck housing. See Figure 1:

It is important that the Battery Board and the WASP-P™ Sensor are oriented correctly. Failure to orient the battery with the WASP-P™ can cause damage to the battery pins and will damage the Sensor. This is done by lining up the silver mark on the WASP-P™ main housing with the largest cutout on the battery board as show above. Newer sensor housing has the cutout in lieu of the silver mark.

Once the pins make contact a LED on the battery module board will turn on to indicate power on. During this time, the WASP-P™ device performs a power-on self test (POST). The LED will flash quickly for a couple of seconds and then turn off to indicate this cycle.

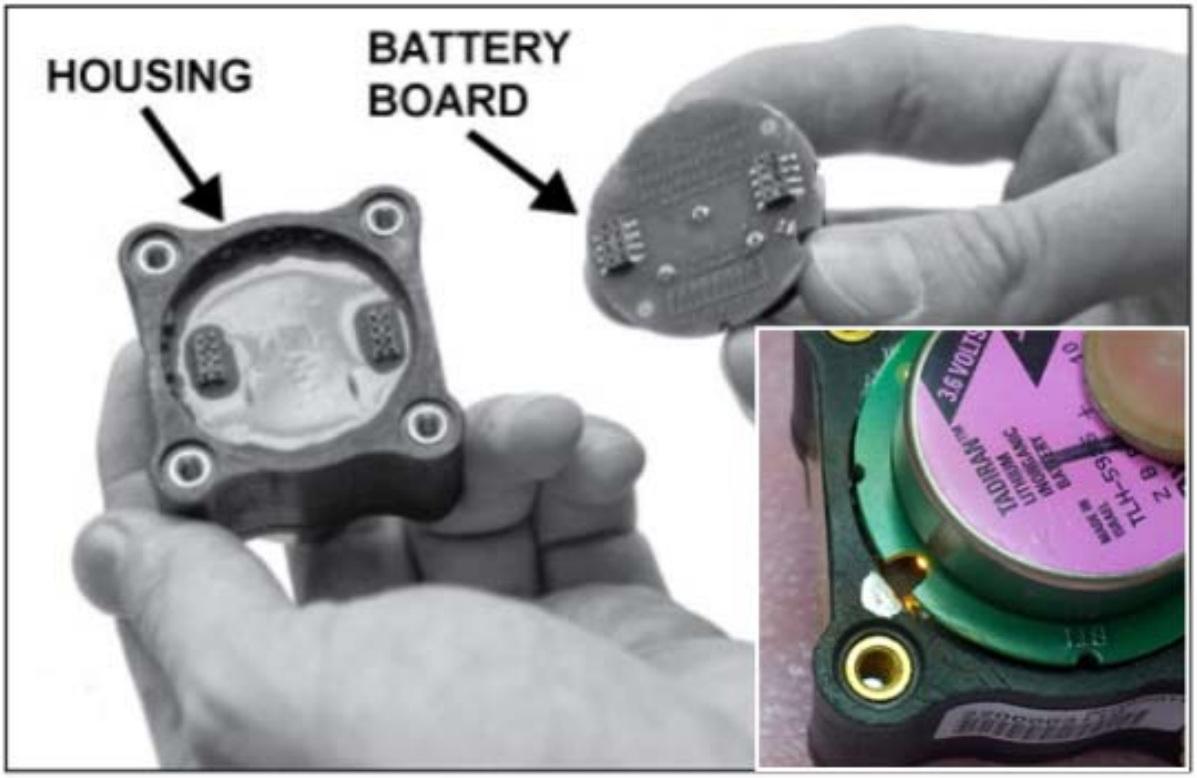

Figure 1: Install WASP™ Battery Board

2.1.2. Cap and Gasket Installation

Each top cap will have a Gylon 3545 gasket adhered onto its surface. This gasket is required for the sensor to maintain an IP54 rating. There is no specific orientation required for the top cap; and it is retained by four 8-32 stainless steel screws.

WARNING – DO NOT REMOVE THE FOUR SCREWS ON THE BOTTOM OF THE DEVICE

2.1.3. WASP-P™ LED Error Indicator

Should the POST, (Power On Self Test), fail, the device locks up and flashes the LED in discernible patterns to help diagnose the source of the problem. See the section at the end of this manual on troubleshooting for details on the LED flash codes.

2.2. Placement Of The WASP-P™ Pucks

2.2.1. WASP-PTM Mounting

The WASP-P sensors are designed with a 1/8 NPT male thread connection. To properly mount, the user will be required to provide an appropriate tapered or straight 1/8 female threaded connection. It is recommended that a medium, such as nylon tape, be used to help ensure proper mating and tightly sealed connection is made.

To help maintain stability and reduce structural stresses on the connector, (vibratory loading), a supporting plate attached to the provided mounting bracket is required. The mounting bracket is supplied and shipped with the sensor and must be attached to the sensor as shown in Figure 2. Use of this bracket, or an alternate fastening arrangement, will help minimize dynamic load from piping or tubing. An example of alternate fastening method which can be adopted is shown in Figure 3.

Figure 2: Installation Bracket w/ WASP-P™

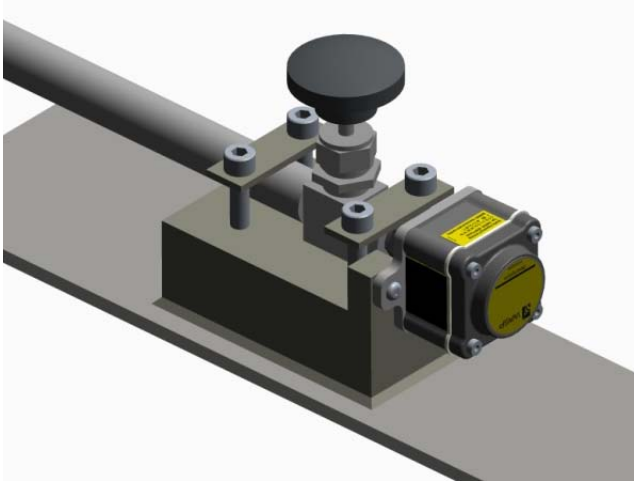

Figure 3: Installation / mounting WASP-P™

3 Troubleshooting WASP LED Flash Codes

3.1. LED Flash Codes

The following table contains a brief description of all flash codes reported by the device:

FLASH CODE	DESCRIPTION
2 Flashes - Battery Failure	Device battery is either too low or too high. Valid regions are 3.00 V to 4.00 V
3 Flashes - Temperature Sensor Failure	Temperature sensor readings are outside of the acceptable start-up temperature window from -40°C to +100°C
4 Flashes - Radio Failure	Device cannot communicate with the onboard radio
5 Flashes - Regulator Failure	The regulated voltage is outside of the allowable window, yet the MCU is still able to operate. For safety and reliability, the device only accepts regulated voltage between 2.00 V and 2.40 V

3.2. What To Do When An Error Is Reported

Battery Failure (2-Flash)

Recommend removing and replacing with a new battery, checking to see that the pins have mated correctly. If the problem still persists, please contact BossPac, with the problem, for warranty replacement considerations.

Temperature Sensor Failure (3-Flash)

Assuming that the device is not powering up in extreme temperatures, this is indicative of an electrical fault with the RTD. Please contact BossPac, with the problem, for warranty replacement considerations.

Radio Failure (4-Flash)

This is indicative of an electrical failure. The problem is much more severe in this instance as device cannot communicate. Please contact BossPac, with the problem, for warranty replacement considerations.

Regulator Failure (5-Flash)

This is indicative of an electrical failure. Please contact BossPac, with the problem, for warranty replacement considerations.

3.3. Contact Info

BossPac engineers can be reached at:

Email: support@bosspac.com

Ph: +1 403-216-1226

BossPac Engineering & Technology

1450 28th Street NE, Bay 8, Calgary, Alberta, CANADA T2A 7W6

Toll Free 866 616-1226www.bosspac.com

FCC & IC Statements

FCC Class B Part 15

This device complies with part 15 of the FCC Rules. Operation is subject to the following two conditions: (1) This device may not cause harmful interference, and (2) this device must accept any interference received, including interference that may cause undesired operation.

Changes or modifications not expressly approved by BossPac Engineering Technology Inc. may void the user's authority to operate the equipment.

IC RSS 210

This device complies with Industry Canada licence-exempt RSS standard(s). Operation is subject to the following two conditions: (1) this device may not cause interference, and (2) this device must accept any interference, including interference that may cause undesired operation of the device.

Le présent appareil est conforme aux CNR d'Industrie Canada applicables aux appareils radio exempts de licence. L'exploitation est autorisée aux deux conditions suivantes : (1) l'appareil ne doit pas produire de brouillage, et (2) l'utilisateur de l'appareil doit accepter tout brouillage radioélectrique subi, même si le brouillage est susceptible d'en compromettre le fonctionnement.

FCC/IC RF Exposure Statement

This equipment complies with FCC radiation exposure limits set forth for an uncontrolled environment. The antenna(s) used for this equipment must be installed to provide a separation distance of at least 8 inches (20cm) from all persons.

Cet équipement est conforme à l'exposition aux radiations de FCC et d'Industrie Canada établies pour un environnement non contrôlé. L'antenne (s) utilisé pour cet équipement doit être installé pour fournir une distance d'au moins 20cm à partir de toutes les personnes.