KODAK EKTRA

KODAK EKTRA Smartphone User Manual

Please Read Before Proceeding

SAFETY PRECAUTIONS

Please read the safety precautions carefully to ensure the correct use of your mobile phone.

- Avoid hitting, throwing, dropping, crushing, bending or puncturing your mobile phone.
- Avoid using your mobile phone in a damp environment, such as the bathroom. Prevent your mobile phone from being intentionally soaked or washed in liquid.
- Do not switch on your mobile phone when it is prohibited to use phones or when the phone may cause interference or danger.
- Do not use your mobile phone while driving.
- Follow any rules or regulations in hospitals and health care facilities. Switch off your mobile phone near medical apparatus.
- Switch off your mobile phone in an aircraft. The phone may cause interference to control equipment of the aircraft.
- Switch off your mobile phone near high-precision electronic devices. The phone may affect the performance of these devices.
- Do not attempt to disassemble your mobile phone or its accessories. Only qualified personnel are allowed to service or repair the phone.
- Do not place your mobile phone or its accessories in containers with a strong electromagnetic field.
- Do not place magnetic storage media near your mobile phone. Radiation from the phone may erase the information stored on them.
- Do not put your mobile phone in a high-temperature place or use it in a place with flammable gas such as a petrol station.
- Keep your mobile phone and its accessories away from young children. Do not allow children to use your mobile phone without guidance.
- Use only approved batteries and chargers.
- Observe any laws or regulations on the use of wireless devices. Respect others' privacy and legal rights when using your wireless device.
- Do not use the mobile phone in aeroplanes, hospitals, petrol stations, or professional garages.
- For medical implant patients (heart, insulin, etc.), keep the mobile phone 15cm away from the implant and, while calling, keep the phone on the opposite side of the body from the implant.
- Strictly follow the relevant instructions in this manual while using the USB cable. Otherwise your mobile phone or PC may be damaged.

LEGAL NOTICE

Bullitt Mobile Ltd is a licensee for Kodak.

The Bluetooth® word mark and logos are registered trademarks owned by the Bluetooth SIG, Inc. and any use of such marks by Bullitt Group is under license. All other third-party trademarks and trade names are those of their respective owners.

No part of this document may be reproduced or transmitted in any form or by any means without prior written consent of Kodak.

The product described in this manual may include copyrighted software and possible licensees. Customers shall not in any manner reproduce, distribute, modify, decompile, disassemble, decrypt, extract, reverse engineer, lease, assign or sub-license the said Software or Hardware, unless restrictions are prohibited by applicable laws or such actions are approved by respective copyright holder under licenses.

NOTICE

Some features of the product and its accessories described herein rely on the software installed, capacities and settings of local networks, and may not be activated or may be limited by local network operators or network service providers. Thus, the descriptions herein may not exactly match the product or its accessories you purchase.

The manufacturer reserves the right to change or modify any information or specifications contained in this manual without prior notice or obligation.

The manufacturer is not responsible for the legitimacy and quality of any products that you upload or download through this mobile phone, including but not limited to the text, pictures, music, movies, and non-built-in software with copyright protection. Any consequences arising from the installation or usage of the preceding products on this mobile phone shall be borne by yourself.

For the most up to date version of the user guide, please visit: **www.kodakphones.com**

NO WARRANTY

The contents of this manual are provided "as is". Except as required by applicable laws, no warranties of any kind, either express or implied, including but not limited to, the implied warranties of merchantability and fitness for a particular purpose, are made in relation to the accuracy, reliability or contents of this manual.

To the maximum extent permitted by applicable law, in no case shall the manufacturer be liable for any special, incidental, indirect, or consequential damages, or lost profits, business, revenue, data, goodwill or anticipated savings.

IMPORT AND EXPORT REGULATIONS

Customers shall comply with all applicable export or import laws and regulations and will obtain all necessary governmental permits and licenses in order to export, re-export or import the product mentioned in this manual including the software and technical data therein.

CONTENTS

1. INTRODUCTION **6**
2. KODAK EKTRA SMARTPHONE **7**
3. KEY FUNCTIONS **7**
4. INSERTING THE SIM CARD **8**
5. INSERTING THE MEMORY CARD **8**
6. CHARGING THE BATTERY **9**
Important Information About the Battery 9
7. POWERING YOUR MOBILE PHONE ON AND OFF **9**
7.1 Powering On Your Mobile Phone 9
7.2 Powering Off Your Mobile Phone 10
8. GETTING TO KNOW THE HOME SCREEN **10**
9. USING THE TOUCHSCREEN **10**
9.1 Touchscreen Actions 10
9.2 Rotating Your Mobile Phone Display 10
10. LOCKING AND UNLOCKING THE SCREEN **10**
10.1 Locking the Screen 10
10.2 Unlocking the Screen 10
11. DIALLING **11**
11.1 Making Domestic Calls 11
11.2 Making International Calls 11
11.3 Emergency Calls 11
12. GUIDE TO MENU OPERATIONS **11**
12.1 Android Pay™ payment service 12
12.2 AVG Anti-Virus 12
12.3 Backup and Restore 12
12.4 Calculator 12
12.5 Google Calendar™ 12
12.6 Camera 12
12.7 Chrome™ 13
12.8 Clock 13
12.9 Contacts 13
12.10 Downloads 14
12.11 Google Drive™ 14
12.12 File Commander 15
12.13 Gmail™ 15
12.14 Google 15
12.15 Google Hangouts 15
12.16 Super 8 app 15
12.17 Google Keep™ 15
12.18 Google Maps™ 15
12.19 Messaging 16
12.20 OfficeSuite 17
12.21 Phone 17
12.22 Google Photos™ 18
12.22.1 Gallery app 18
12.23 Google Play Movies 19

12.24 Google Play Music 19
12.25 Google Play™ Store 19
12.26 Settings 19
12.26.1 Wi-Fi 19
12.26.2 Bluetooth® 20
12.26.3 Data usage 20
12.26.4 More 20
12.26.5 Display 20
12.26.6 Sound & notification 20
12.26.7 Apps 20
12.26.8 Storage & USB 20
12.26.9 Battery 20
12.26.10 Memory 21
12.26.11 Users 21
12.26.12 Tap & pay 21
12.26.13 Location 21
12.26.14 Security 21
12.26.15 Accounts 21
12.26.16 Google 21
12.26.17 Language & input 21
12.26.18 Backup & reset 21
12.26.19 Date & time 21
12.26.20 Scheduled power on & off 22
12.26.21 Accessibility 22
12.26.22 Printing 22
12.26.23 Prints app 22
12.26.24 About phone 22
12.27 Snap Gallery 23
12.28 Snapseed™ 23
12.29 Sound Recorder 23
12.30 YouTube™ 23
13. APPENDIX 23
13.1 Warnings and Precautions 23
13.2 Accessories 24
13.3 Cleaning and Maintenance 25
13.4 Prevention of Hearing Loss 25
13.5 CE SAR Compliance 25
13.6 Spectrum and Power 26
13.7 EU Compliance Statement 26

Disposal and Recycling Information 26
Reduction of Hazardous Substances 27
Legal Attribution 27
Declaration of Conformity 27

1. INTRODUCTION

Thank you for purchasing the **KODAK EKTRA** Smartphone and welcome to a new movement in smartphone photography.

By choosing the Ektra smartphone you've chosen to take back creative control over your photography with a one-of-a-kind smartphone camera experience that will feel familiar to DSLR users while ensuring ease of use through a combination of unique software and impressive lens hardware. All of which is infused with the imaging expertise of Kodak engineers and our photography ambassadors.

In this user manual we'll guide you through the finer points of the Ektra smartphone to equip you with all the tools you need to make sure you're ready when the perfect shot arises. From an intuitive custom-built camera app to sophisticated image editing software and the ability to print your images straight from your smartphone, we hope you enjoy this entirely new photography experience.

Don't forget to share your best creations with us, and: Don't just capture. Create.

Facebook.com/kodakphones

@kodakphones

@kodakphones

2. KODAK EKTRA SMARTPHONE

1. SIM/SD slot
2. Front camera
3. Headset jack
4. Menu keys
5. Lanyard point
6. Shutter button
7. Power button
8. Volume up/down buttons
9. LED flash
10. 21MP camera

3. KEY FUNCTIONS

Power Button	Press and hold to turn on. Press and hold to open the options menu. Press to lock or wake the screen when your mobile phone is on.
Home Button	Press at any time to display the Home screen. A long press of the Home button will launch Google Search.
Recent Apps Button	Press to list the apps that are currently open.
Back Button	Press to display the previous screen you were working in. Use to close the on-screen keyboard.
Volume Button	Volume: Press the Volume Up button (+) to increase the volume, or the Volume Down button (–) to decrease the volume. To capture a screen shot, press and hold both the Power and Volume Down buttons simultaneously.
Shutter Button	When in the Camera app, press the Shutter button to instantly take your pictures. When taking a photo, half press to focus the image and fully press to capture. To instantly launch the Ektra camera for quick access, double press the Shutter button.

4. INSERTING THE SIM CARD

1. To insert the Nano SIM, use the supplied tool to open the SIM and microSD™ card slot.

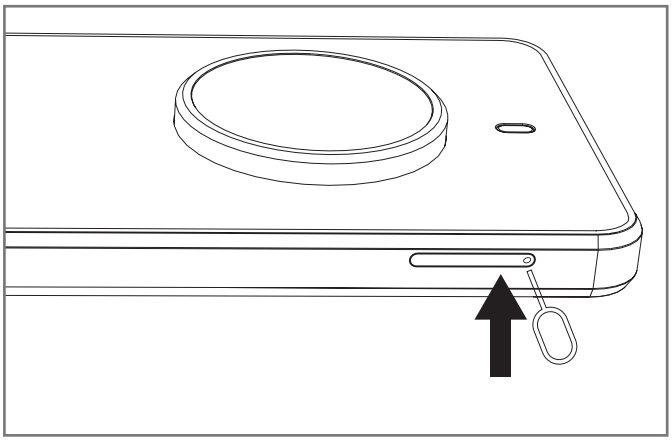

2. Put the Nano SIM card in the tray as shown below:

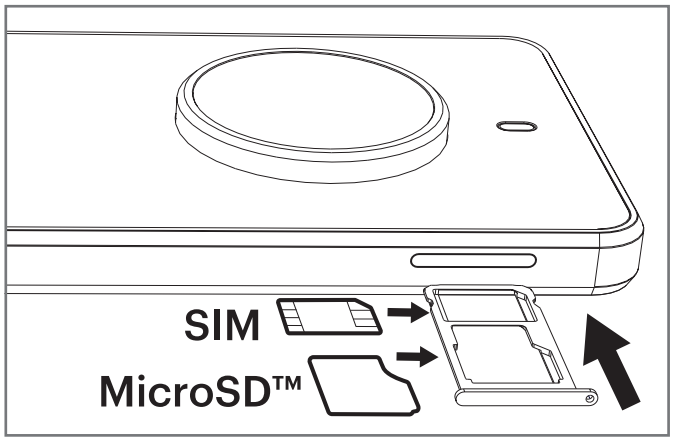

3. Replace the SIM and microSD card tray.

5. INSERTING THE MEMORY CARD

1. To insert the microSD, use the supplied tool to open the SIM and microSD card slot.

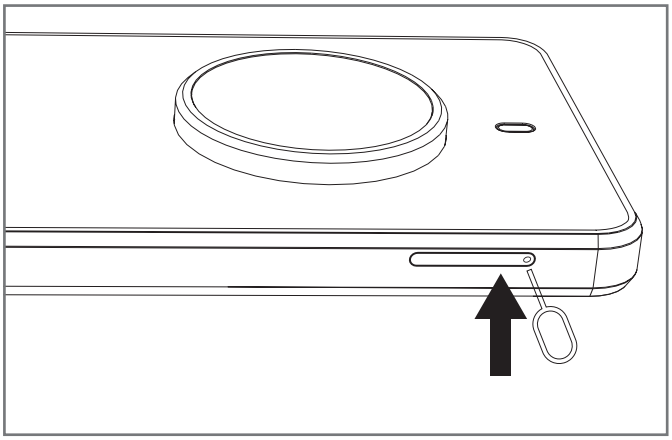

2. Put the memory card in the tray as shown below:

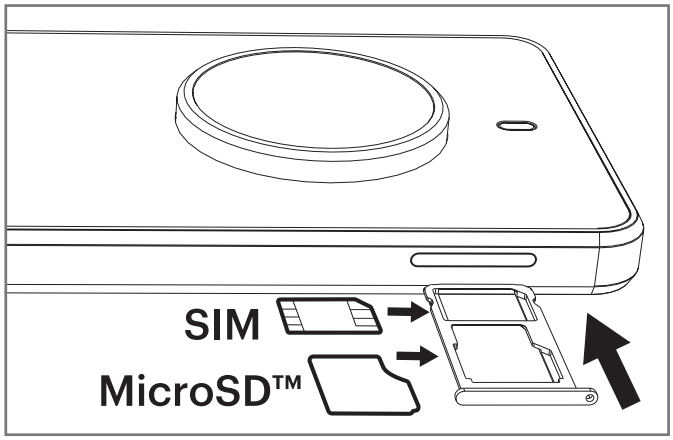

3. Replace the SIM and microSD card tray.

6. CHARGING THE BATTERY

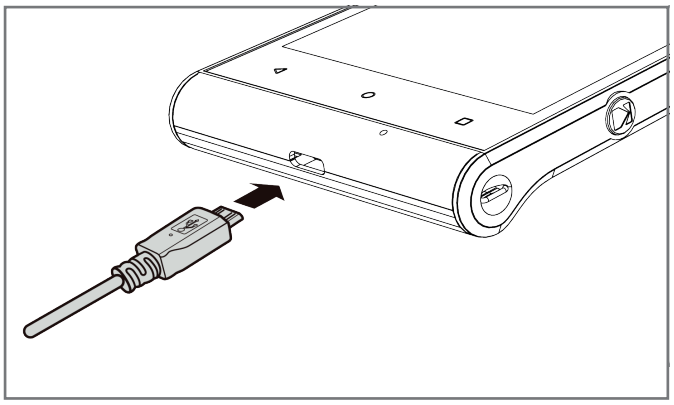

The Kodak Ektra smartphone has an embedded battery. To charge the battery:

1. Connect the USB cable that came with your mobile phone to the charger.
Note: Use only Kodak approved chargers and cables. The Kodak Ektra smartphone uses USB 3.0 cables and connectors. Unapproved equipment may cause damage to the device.

2. Connect the USB 3.0 cable to the USB port of your phone.
Note: The orientation of the USB 3.0 cable is not critical as it is in USB 2.0 charge cables. Be careful not to use excessive force when plugging in the USB cable. Damage can be caused by attempting to insert the connector incorrectly.
Note: This is not covered by the warranty.

3. Connect the USB to the appropriate AC mains plug and connect safely to the mains power supply.

4. You will need to charge the device before using it for the first time. When charging is complete, either the word 'charged' is shown on the unlock screen or '100%' can be seen in place of the battery icon (top right). Remove the connector from the device and then remove the wall charger.

Important Information About the Battery:

If the battery is completely discharged, it may take a few minutes before the charging icon appears.

If the battery has not been used for a long period of time, you may not be able to initially power on your mobile phone immediately after you begin charging the battery. Allow the battery to charge for a few minutes with the phone powered off before attempting to power on the phone. The on-screen charge animation may not be displayed during this period.

The time required to charge the battery depends on the environmental temperature and the age of the battery.
When the battery power level is low, the phone plays an alert and displays a prompt. When the battery power is almost exhausted, your phone will power off automatically.

7. POWERING YOUR MOBILE PHONE ON AND OFF

7.1 Powering On Your Mobile Phone

1. Press and hold the Power button.
2. The first time you power on your phone, you will see a Welcome screen. Select your preferred language and touch the Start icon to continue with the set up process.

Note: If personal identification number (PIN) protection is enabled on your SIM Card, you will be asked to enter your PIN before the Welcome screen. A Wi-Fi or Data connection is needed to complete the set up process. You will now be prompted to sign in with your existing Google account, or set up a new account and complete the set up process.

Note: You can skip the account set up process to complete at another time. A Google account is required to use some of the Google services on offer through your device.

7.2 Powering Off Your Mobile Phone

1. Press and hold the Power button to open the Phone options menu.
2. Touch Power off.

8. GETTING TO KNOW THE HOME SCREEN

After you sign in, or when you power on the phone, the Home Screen opens. The Home Screen is your starting point to access all the features on your phone. This displays application icons, widgets, shortcuts and other features. You can customise the Home Screen with different wallpapers and display the items in the way that you want.

The Home Screen has the Launcher icon. Touch this to view and launch installed applications (apps).

Note: A long press on an empty space on the Home Screen will launch the shortcut to Wallpapers, Widgets and Settings.

9. USING THE TOUCHSCREEN

9.1 Touchscreen Actions

Touch: Use your fingertip to select an item, confirm a selection, or start an application.

Touch and hold: Touch an item with your fingertip and continue to press down until your mobile phone responds. For example, to open the options menu for the active screen, touch the screen and hold down until the menu appears.

Swipe: Move your finger across the screen either vertically or horizontally. For example, swipe left or right to switch between pictures in the gallery.

Drag: Touch and hold the desired item with your finger. Drag the item to any part of the screen. You can drag an icon to move or delete it.

9.2 Rotating Your Mobile Phone Display

The orientation of most screens will rotate with the phone as you turn it from portrait to lanscape and back again. This feature can be disabled from the Settings Menu (display section).

10. LOCKING AND UNLOCKING THE SCREEN

10.1 Locking the Screen

When your mobile phone is on, press the Power button to lock the screen. When the screen is locked, you can still receive messages and calls.

If you leave your mobile phone inactive for a while, the screen will lock automatically.

10.2 Unlocking the Screen

Press the Power button to wake up the screen. Then drag the lock icon to the middle of the screen to unlock.
To use the Camera function directly from the locked screen, drag the camera icon to the left to launch the Camera App.

To use the Google voice search™ directly from the locked screen, drag the Google voice search icon to the right which will launch the Google voice search.

Note: If you have set up a screen lock, you will be prompted to unlock the screen.

11. DIALLING

11.1 Making Domestic Calls

Use the number keys to input numbers, then press the dial key to dial the call. You can input domestic calls in this order: area code, phone number, dial key.

11.2 Making International Calls

For making international calls you should long press the 0 key, until the international phone prefix "+" appears on the screen. This will allow you to make an international call to any country regardless of what the international call prefix is.

You can input international calls in this order:
+ Country code, area code, phone number, dial key.
After entering the prefix, enter the country code and full number you wish to call.

11.3 Emergency Calls

If you are located within a network area (you can find this out by referring to the network strength indicator located on the upper left-hand corner of your mobile phone screen), even if you do not have a SIM card, you will be able to place emergency calls.

12. GUIDE TO MENU OPERATIONS

All function options available on the mobile phone are listed below with brief descriptions.

You must sign in to a Google account to use Gmail, Google Play Movies, and access the full range of functionality provided by other Google apps. To download applications on the Google Play store, you will also be prompted to sign in to your Google account.

Note: If your phone does not have a SIM card installed, you cannot connect to mobile networks for voice and data services, but you can connect to a Wi-Fi network to sign in to your Google account and to use all the features of your phone, except making a phone call.

If you start the phone for the first time without a SIM card inserted, you will be asked to touch "*Connect to Wi-Fi*" (instead of to a "*mobile network*") follow the instructions to set up your phone. If you already have a Google account, touch "Sign in" and enter your username and password.

12.1 Android Pay™ payment service

The Android Pay payment service is a very convenient means of mobile payment. You can add an existing card in your Google account by confirming a few details or add a new card from any participating bank. To pay, simply wake up your phone and tap at participating stores (the application does not need to be running).

Opening Android Pay payment service:
Touch > Android Pay to open the application.

12.2 AVG Anti-Virus

Anti-virus software is a real-time app that monitors and scans your device. You can touch "SCAN NOW" to scan for hidden threats.

Opening AVG Anti-virus:
Touch > Anti-virus to open the application.

12.3 Backup and Restore

In the backup bar, you can select the Personal data Application to backup to memory cards. In the restore bar, select the desired file to return back to the phone.

Opening the Backup and Restore:
Touch > Backup and Restore to open the application.

12.4 Calculator

Use the calculator to solve simple arithmetic problems or use its advanced options to solve more complex equations.

Opening the Calculator:
Touch > Calculator to open the application.

12.5 Google Calendar™

Use Google Calendar to create and manage events, meetings, and appointments. Depending on your synchronisation settings, the calendar on your phone automatically synchronises with your calendar accessed via the web or other devices.

Opening Google Calendar:
Touch > Google Calendar to open the application. Touch to display various view and settings options.

Note: If you are using the Calendar function for the first time, you can swipe the screen to the left to scroll through the features of this function. On the last page of the overview ("Events from Gmail") touch GOT IT.

12.6 Camera

The Camera application is unique to the Ektra smartphone, offering extensive functionality with a DSLR-inspired user interface that offers familiarity and ease of use for both photos and video.

Opening your camera:
To open the application, do one of the following:

- Touch on the Home screen.

- Press the camera shutter button half-way to focus and fully to take a photo. You can also touch to take your photo, and view the photo by touching the thumbnail of the latest captured photo.

Touch the Back key (twice) or the Home key to close the camera.
In the Camera preview screen, click on the icon at the top of the screen to set up the camera. Touch to change the Option, Camera and Video settings.

In the Manual Mode, you can scroll advanced features to make adjustments as you're taking the photo and view the changes live. Use the dial to scroll through Exposure, Scene Mode, White Balance, ISO, Shutter Speed and Smart Auto. In the Camera settings, you can also select: Face Detection, Auto Scene Detection, File Format, Self Timer, Picture Size, Preview Size, Face Beauty Mode.

Select Video mode via the mode wheel, in the Video settings, to set as follows: Noise Reduction, EIS, Microphone, Audio mode, Video quality.
Touch to start recording, touch it again to stop recording. After recording a video, touch the thumbnail of the latest recorded video next to watch it. Touch to play the video.

12.7 Chrome™

You can launch the browser with this function if you are connected via your data or Wi-Fi provider.

Opening Chrome:
To open the application, do one of the following:
- Touch Chrome on the Home screen.
- Touch > Chrome to open the application.

12.8 Clock

Enter the menu, you can view the date and time, or use to set an Alarm, Stopwatch, Timer or World Clock.

Opening the Alarm:
Touch > Clock to use your mobile phone alarm.

Adding an Alarm:
1. On the alarm list screen, touch to add an alarm.
2. To set the alarm, do the following:

- Set the hour and minutes by selecting the respective field and moving the pointer up or down. When the required time is set, touch OK.
- To add an alarm label, touch Label. Enter the label, then touch OK.
- To set repeat mode, touch Repeat. Touch one or more options.
- To set the ringtone, touch . Choose an option, then touch OK.
- To vibrate when the alarm sounds, touch the "*Vibrate*" check box.

Note: By default, the alarm is automatically activated.

12.9 Contacts

The Contacts application enables you to save and manage information such as phone numbers and addresses of your contacts. Touch to set the functions of Contacts to display, Import / Export, Groups, Accounts, Settings.
If you have not yet added any contacts, a message will be displayed with hints on how to start adding contacts to your device.

Opening Contacts:
Touch > Contacts . It will launch the ALL CONTACTS tab.
All of your contacts are displayed alphabetically in a scrolling list.

Adding a Contact:
1. In the contacts list, touch to add a new contact.
2. Enter the contact's name, and then add any detailed information such as phone number or address.
3. When you are finished, touch *"Add new contact"* to save the contact information.

Adding a Contact to Your Favourites:
1. Touch the contact you want to add to Favourites.
2. Touch on the top left corner, and the icon turns solid .

Searching for a Contact:
1. In the contacts list, touch to search for a contact.
2. Enter the name of the contact you are searching for. As you type, contacts with matching names appear below the search box.

Editing a Contact:
You can always make changes to the information you have stored for a contact.
1. In the contacts list, touch the contact whose details you want to edit.
2. Touch .
3. Make the desired changes to the contact information, and then touch *"Edit Contact"*. To cancel all changes you have made to the contact information, touch the Back button .

Communicating with Your Contacts:
From the ALL CONTACTS or FAVOURITES tab, you can quickly call or send a text (SMS) or multimedia message (MMS) to a contact's default phone number. You can also open details to view a list of all the ways you can communicate with that contact. This section describes how to communicate with a contact when you view your contacts list.

Communicating with a Contact as Follows:
1. In the contacts list, touch the contact that you want to communicate with.
2. In the contact's details screen, you can do one of the following:
   - Touch the phone number to make a call.
   - Touch to send a message.

12.10 Downloads

To display the downloadable content.

Opening the Downloads:
Touch > Downloads to open the application.

12.11 Google Drive™

Google Drive is an online cloud storage service. By signing in with a Google account you can access 15GB of free space for all your photos and documents. If you need more space you can upgrade your plan to include more storage.

Opening the Drive:
Touch > Google Drive to open the application.

12.12 File Commander

You can use File Commander to organise your files in folders on the memory card or on your Kodak smartphone.

Opening the File Commander:
Touch > File Commander to open the application.

12.13 Gmail™

Gmail is a web-based email service by Google. When you first set up your phone, you can configure it to use an existing Gmail account or create a new account. The first time you open the Gmail application on your phone, your Inbox will have automatically synced to your existing Gmail account.

Opening Gmail:
Touch > Gmail . The Inbox mail list appears.

12.14 Google

You can use Google search to search the web. This is an alternative browser to Chrome.

Opening the Google app:
Touch > Google to open the application.

12.15 Google Hangouts

You can use the Google Hangouts communication platform to easily share and connect with other people via instant messaging and video calling, with up to 10 people allowed in a hangout at once.

Opening the Google Hangouts app:
Touch > Google Hangouts to open the application.

12.16 Super 8 app

Shoot and share vintage-style videos and apply film grain, vignettes and more retro effects to previously shot videos with the Kodak Ektra Super 8 video recorder app.

Opening the Super 8 app:
Touch > Super 8 to open the application.

12.17 Google Keep™

Google Keep is a cloud-based note-taking application that allows you to easily create articles, pictures, voice notes, all accessible via the cloud. Login via your Google account to access your personal notes.

Opening the Google Keep app:
Touch > Google Keep to open the application.

12.18 Google Maps™

Google Maps offers real-time navigation, traffic conditions and transport updates with detailed location information and downloadable maps.

Enabling Location:
Before you open Maps to find your location or search for places of interest, you must enable Location and set Location mode.

1. Touch > Settings
2. Touch Location.
3. Set Location setting to ON.
4. Touch Mode and choose the relevant option.

Note: To use the navigation feature, the Mode function will have to be set to High Accuracy or Device Only.

Opening Google Maps:
Touch > Google Maps to open the application.

Note: When opening the application for the first time, a welcome screen appears. Touch **ACCEPT & CONTINUE** to continue and follow the on-screen instructions to configure initial settings.

12.19 Messaging

The Messaging application allows you to exchange text messages (SMS) and multimedia messages (MMS) with anyone using an SMS or MMS-capable phone.

Opening Messaging:
To open the application, do one of the following:
- Touch on the Home screen.
- Touch > Messaging .

Creating and Sending a Text Message:
The Messaging window opens, where you can create a new message or open an ongoing message thread.
1. Touch to start a new text or multimedia message or touch an existing message thread to open it.
2. Enter a phone number in the "Type name or number" or touch to add a phone number from the Contacts list. As you enter the phone number, matching contacts appear. You can touch a suggested recipient or continue entering the phone number.
3. Touch the "Type text message" to start entering your message.
   If you touch the Back key while composing a message, it is saved as a draft in your message list. Touch the message to resume composing it.
4. Once you are done, touch .

Note: Responses appear in the window. As you view and send additional messages, a message thread is created.

Creating and Sending a Multimedia Message:
1. On the messaging screen, touch .
2. Enter a phone number in the "Type name or number", touch to add a phone number from the Contacts list.
3. Touch the "Type text message" to start entering your message.
4. Touch > Add subject to add the message subject.
5. Enter a subject.

Your mobile phone is now in multimedia message mode.
6. Touch and select the type of media file to attach to the message.
7. Once you are done, touch .

Opening and Viewing a Multimedia Message:
1. In the message list, touch the message thread to open it.

2. Touch the multimedia message to view the message.
3. Flick up or down to view the previous or next slide.

Replying to a Message:
1. In the message list, touch a text or multimedia message thread to open it.
2. Touch the "Type text message" to compose your message.
3. Touch .

Customising the Message Settings:
In the message list, touch , to choose between Delete all threads, Settings, messages to set.

12.20 OfficeSuite

OfficeSuite lets you easily view, edit, and create Word, Excel, and PowerPoint documents, convert to PDF, and manage your files all with a feature-rich mobile office solution.

Opening OfficeSuite:
Touch > OfficeSuite to open the application.

12.21 Phone

There are several ways to place a phone call. You can dial a number, select a number in your contacts list, on a Web page, or from a document that contains a phone number. When you are on a call, you can either answer incoming calls or send them to your voice mail box. You can also set up conference calls with several participants.

Note: Contact your network operator to learn whether it supports conference calls and how many participants you can add.

To make a call, you can use the Phone application, or select a number from Favourites , Call log or Contacts . When you are on a call, you can touch the Home key to return to the Home screen and use other functions. To return to the calling screen, drag the notification bar down and touch "*Current call*".

Making a Call with the Dialler:
1. From the Home screen, touch . Then touch to display the dialler.
   Note: You can also access the Phone application by touching > Phone .
2. Touch the appropriate numeric keys to enter the phone number.
   Tip: Your mobile phone supports the SmartDial function, that is, when you touch numbers on the dialler, the phone automatically searches among your contacts and lists the matching results based on the accuracy. Close the keypad to view more possible matches.
3. After entering the number, or selecting the contact, touch .

Making a Call from Favourites:
Touch > Phone > Favourites . Touch the contact to make the call.

Making a Call from Call log:
1. Touch > Phone > Call log . You will see the list of latest calls. If you can not find the desired contact, tap "*View*" full call history to display all call history.
2. Touch the contact in the list and tap Call Back to make the call.

Making a Call from Contacts:
1. Touch > Phone > Contacts .
   Note: You can also access the Contacts application by touching > Contacts .

2. In the list, touch the contact you want to call.
3. Touch the phone number to call the contact.

12.22 Google Photos™

View and store all your pictures and videos in one place.

Opening Google Photos:
Touch > Google Photos to open the application.

Viewing a Picture:
1. Touch the picture to view it in full-screen mode. When viewing a picture in full-screen mode, flick the picture left or right to view the previous or next picture.
2. To zoom in on the image, move your two fingers apart from each other at the location of the screen where you want to zoom in. In zoom mode, swipe your finger up or down and left or right.

Viewing a Video:
Touch the video to play.

Edit and Share Your Photos:
As you browse through your photos, the following options become available:
- Share: Touch and share your photos through various applications available on your device.
- Edit: Touch and edit your photos with the wide range of options available.
- Info: Touch to view the details of photos.
- Delete: Touch to delete photos no longer required.

12.22.1 Gallery app

View, share and edit your photos in the Gallery app to enjoy the full Ektra phone experience. Select the album/folder and play as a slideshow or select items to share with other applications.

Opening Photos:
Touch > Gallery to open the application or access the gallery straight from the camera but selecting your last photo in the top left corner and choose the gallery. The gallery application categorises your pictures and videos by storage location and stores these files in folders. Touch a folder to view the pictures or videos inside.

Viewing a Picture:
1. Touch the picture to view it in full-screen mode. When viewing a picture in full-screen mode, flick the picture left or right to view the previous or next picture.
2. To zoom in on the image, move your two fingers apart from each other at the location of the screen where you want to zoom in. In zoom mode, swipe your finger up or down and left or right.
3. Info: Touch to view the details of photos.
4. Delete: Touch to delete photos no longer required.

Viewing a Video:
Touch the video within the gallery to play your last recording.

Add Post-Production to your Photos with Snapseed:
Use the in-built Snapseed editor on your Kodak Ektra smartphone to edit and transform your photos in post-production.
- Select the Snapseed app from your homescreen or tap on your last photo from the camera app and choose Snapseed to access the editing suite.
- Touch and select the tool you require to make adjustments to your image.

- Press ✓ to confirm the change. Once you've finished making all your edits select SAVE to add the edited image to your gallery or ⋮ to share.

Share Your Photos to Social Media:
- Touch ∝ and share your photos through Facebook, Twitter and Instagram. Download additional social applications to increase the selection available.

12.23 Google Play Movies

Stream and download movies and TV series to watch on your device.

Opening Play Movies:
Touch ⊞ > Google Play Movies to open the application. Follow the instructions on screen to purchase movies.

12.24 Google Play Music

You can transfer music files from your PC to your microSD card or buy music on the Play Store to listen to music on your mobile phone.

Opening Google Play Music:
Touch ⊞ > Google Play Music to open the application. Touch the song you want to play.
Tip: When you are listening to music, touch the Back button ◁ to use another application. Your music continues to play. To return to the music controls, open the notification panel and then touch the song.

12.25 Google Play™ Store

Google Play Store provides direct access to Google Android applications and games, which you can download and install on your phone.

Opening Play Store:
Touch ⊞ > Google Play Store to open the application.

When you open Play Store for the first time, the Overview page will appear. Touch Get Started to continue, follow the on screen instructions.

12.26 Settings

12.26.1 Wi-Fi

Wi-Fi gives you wireless access to broadband Internet access. To use Wi-Fi on your mobile phone, you need to have access to wireless access points (hotspots). Obstacles that block the Wi-Fi signal will reduce its strength.

Turning On Wi-Fi:
1. Touch ⊞ > Settings .
2. In Wireless & networks, touch Wi-Fi and set it to On.

Connecting to a Wireless Network:
1. Once turned on, touch Wi-Fi.
2. A list of detected Wi-Fi networks will be displayed. Touch a Wi-Fi network to connect.
3. If you select an open network, you will be automatically connected to the network. If you select a network that is secured and connect to it for the first time, enter the password, and then touch Connect.

Note: If you connect to a secured wireless network that you have already used, you will not be prompted to enter the

password again unless you reset your mobile phone to its default settings.

12.26.2 Bluetooth®

Your mobile phone has Bluetooth, which allows you to create a wireless connection with other Bluetooth devices so you can share files with your friends, talk hands-free with a Bluetooth headset, or even transfer photos on your phone to your PC.

If you are using Bluetooth, remember to stay within 10 metres (33 feet) of other Bluetooth devices. Be aware that obstacles like walls or other electronic equipment may interfere with your Bluetooth connection.

Turning On Bluetooth:
1. Touch > Settings .
2. In Wireless & networks, touch Bluetooth and set it to On.

When Bluetooth is turned on, the Bluetooth icon appears in the notification bar.

12.26.3 Data usage

In Wireless & networks, touch Data usage to view the data usage.

Note: The mobile phone displays data traffic as calculated by the phone, this may differ from the operators calculation and should only be used as a reference.
Note: Accessing data services especially while roaming may incur considerable additional charges. Ask your network service provider about fees and data roaming charges.

12.26.4 More

In Wireless & networks, touch More to perform the settings including Aeroplane mode, NFC, Tethering & portable hotspot, VPN, Mobile networks.

12.26.5 Display

In Device, touch Display to perform the settings including ClearMotion™, MiraVision™, Brightness level, Adaptive brightness, Wallpaper, Sleep, Daydream and Font size.

12.26.6 Sound & notification

The mobile phone is pre-loaded with a variety of sound and notification options. In Predefined profiles, choose different scene modes to activate and customise the desired profile such as General, Silent, Meeting, Outdoor. In Notification & Others, set to Notification, Do not disturb, Do Not Disturb access or Sound enhancement.

12.26.7 Apps

To view the installed applications, from the Home screen, touch > Settings .
On the Settings screen, touch Apps.

12.26.8 Storage & USB

In Device, touch Storage & USB, you can view the information form for the SD card or phone storage.

12.26.9 Battery

In Device, touch Battery to display the battery usage. You can choose to either turn the Intelligent Power Saving standby

on/off.

12.26.10 Memory

To display the memory used by apps.

12.26.11 Users

You can set multiple user profiles. If you add a new user, that person needs to set up their own profile preferences. Any user can update apps for all other users.

12.26.12 Tap & pay

Touch screen related corresponding device via which payment can be made.

12.26.13 Location

Switch on in Settings to use Google's location service in conjunction with other applications using GPS satellite positiong (GPS) including Google Maps.

12.26.14 Security

In Personal, touch Security to define your preferred security settings including Screen lock, Make pattern visible, Automatically lock, Power button instantly locks, Lock screen message, Smart Lock, Encrypt phone, Set up SIM card lock, Make passwords visible, Device administrators, Auto factory reset, Unknown sources, Mobile anti-theft, Storage type, Trusted credentials, Install from SD card, Clear credentials, Trust agents, Screen pinning, Apps with usage access.

12.26.15 Accounts

In Personal, touch Account to set up a new account.

12.26.16 Google

In Personal, touch Google, you can set the function of Nearby discoveries, Google Photos Backup, Location, Ads, Search & Now, Security, Set up nearby device.

12.26.17 Language & input

In Personal, touch Language & input, you can set the function of Language, Spell checker, Personal dictionary, Current Keyboard, Google Keyboard, Google voice typing, Text-to-speech output, Voice Control, Pointer speed.

12.26.18 Backup & reset

In Personal, touch Backup & reset to perform the settings including Back up my data, Backup account, Automatic restore, Network settings reset, DRM reset, Factory data reset.

12.26.19 Date & time

When you first start the phone, you are asked if you want the time and date to update automatically using the time provided by the network.

Note: When the time provided by the network is automatically used, you cannot set the date, time, and time zone. To

manually set the Date & time:

1. On the Settings screen, touch System > Date & time.
2. Disable the Automatic date & time option.
3. Disable the Automatic time zone option.
4. Touch Set date. On the set date screen, touch the desired date and touch OK when the configuration is complete.
5. Touch Set time. On the set time screen, touch the hour or minute field and move the pointer up or down to set the time. Touch OK when the configuration is complete.
6. Touch Select time zone, and then select the desired time zone from the list. Scroll the list to view more time zones.
7. Enable or disable the Use 24-hour format to switch between 24-hour format and 12-hour format.

12.26.20 Scheduled power on & off

In System, touch Scheduled power on & off to set the time to automatically power on & off, and repeat mode.

12.26.21 Accessibility

In System, touch Accessibility to perform the settings including TalkBack, Switch Access, Captions, Magnification gestures, Large text, High contrast text, Power button ends call, Auto-rotate screen, Speak passwords, Accessibility shortcut, Text–to–speech output, Touch & hold delay, Colour inversion, Colour correction.

12.26.22 Printing

Install the required services to connect to a wireless printer.

12.26.23 Prints app

Select the Prints App to print your photos direct from your phone. Select the photos you wish to send for print and choose the delivery method to have high quality prints on Kodak photo paper delivered straight to your door or a local store.

12.26.24 About phone

It displays the information of your phone.

Viewing E-label

To view the regulatory information on your mobile phone, do the following:

1. Touch > Settings .
2. On the Settings screen, touch About phone > Regulatory information.

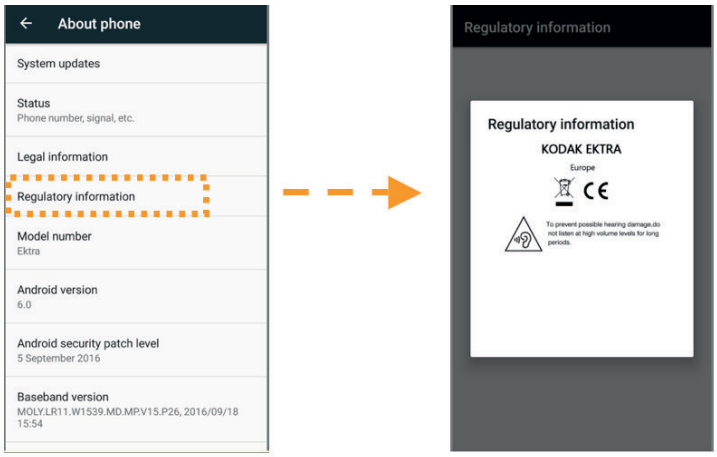

12.27 Snap Gallery

Your Snap Gallery application can automatically search for pictures and videos saved to Phone or SD storage. Select the album/folder and play as a slide show or select items to share with other applications.
Touch > Snap Gallery to open the application. The Gallery application categorises your pictures and videos by storage location and stores these files in folders. Touch a folder to view the pictures or videos inside.

12.28 Snapseed™

Touch > Snapseed to open the application. Snapseed is a complete and professional photo editor that will allow you to turn any picture into an exciting, dramatic image. Use the application to edit and correct images, or apply a large range of effects and enhancements.

12.29 Sound Recorder

Touch > Sound Recorder to open the application. You can record voice memos. Touch to start recording, touch to pause the recording, touch to stop recording. When the recording is finished, you can touch **SAVE** to save the recording. Touch to see the list of recordings, you can choose and touch one recording file to play.

12.30 YouTube™

YouTube is Google's free online video streaming service for viewing, searching for, and uploading videos.

Opening YouTube:
Touch > YouTube to open the application.

13. APPENDIX

13.1 Warnings and Precautions

This section contains important information pertaining to the operating instructions of your device. It also contains information about how to use the device safely. Read this information carefully before using your device.

Waterproof Casing:
USB and Headphone Port covers must be securely in place, and the rear cover properly fitted and locked to ensure the device will meet this level of protection.

Electronic Device:
Power off your device when using it causes danger or interference with other electronic devices.

Medical Device:
Follow rules and regulations set forth by hospitals and health care facilities. Do not use your device when using the device is prohibited.
Pacemaker manufacturers recommend that a minimum distance of 15cm be maintained between a device and a pacemaker to prevent potential interference with the pacemaker. If you are using a pacemaker, use the device on the opposite side of the body to the pacemaker and do not carry the device in your front pocket.

Potentially Explosive Atmosphere:
Power off your device in any area with a potentially explosive atmosphere, and comply with all signs and instructions. Areas that may have potentially explosive atmospheres include the areas where you would normally be advised to

turn off your vehicle engine. Triggering of sparks in such areas could cause an explosion or a fire. Do not power on your device at refuelling points such as service stations. Comply with restrictions on the use of radio equipment in fuel depots, storage, and distribution areas, and chemical plants.

Before using the device, watch out for areas that have potentially explosive atmospheres that are often, but not always, clearly marked. Such locations include areas below the deck on boats, chemical transfer or storage facilities, and areas where the air contains chemicals or particles such as grain, dust, or metal powders. Ask the manufacturers of vehicles using liquefied petroleum gas (such as propane or butane) whether this device can be safely used in their vicinity.

Traffic Security:
Observe local laws and regulations while using the device. In addition, if using the device while driving a vehicle, comply with common guidelines e.g.:
Concentrate on driving. Your first responsibility is to drive safely.
Do not talk on the device while driving. Use hands-free accessories.
When you have to make or answer a call, park the vehicle at the road side before using your device.
RF signals may affect electronic systems of motor vehicles. For more information, consult the vehicle manufacturer.
In a motor vehicle, do not place the device over the air bag or in the air bag deployment area.
Do not use your device while flying in an aircraft. Power off your device when instructed by the flight crew.

Operating Environment:
- Do not use or charge the device in dusty, damp, and dirty places or places with magnetic fields.
- The device complies with the RF specifications when the device is used near your ear or at a distance of 0.5cm from your body.
- Ensure that accessories such as a device case and a device holster are not composed of metal components.
- On a stormy day with thunder, do not use your device when it is being charged, to prevent any danger caused by lightning.
- When you are on a call, do not touch the antenna. Touching the antenna affects the call quality and results in an increase in power consumption. As a result, the talk time and the standby time are reduced.
- While using the device, observe the local laws and regulations, and respect others' privacy and legal rights.
- Keep the ambient temperature between 0°C and 40°C while the device is being charged. Keep the ambient temperature between –10°C to 45°C for using the device powered by a battery.

Prevention of Hearing Damage:
Using a headset at high volume can damage your hearing. To reduce the risk of damage to hearing, lower the headset volume to a safe and comfortable level.

Safety of Children:
Comply with all precautions with regard to children's safety. Letting a child play with your device or its accessories, which may include parts that can be detached from the device, may be dangerous, as it may present a choking hazard. Ensure that small children are kept away from the device and accessories.

13.2 Accessories

Choose only batteries, chargers, and accessories approved for use with this model by the device manufacturer. The use of any other type of charger or accessory may invalidate any warranty for the device, may be in violation of local rules or laws, and may be dangerous. Please contact your dealer for information about the availability of approved batteries, chargers, and accessories in your area.

Battery and Charger:
Unplug the charger from the electrics and from the device when not in use. The battery can be charged and discharged hundreds of times before it eventually wears out. Use the AC power supply defined in the specifications of the charger. An improper power voltage may cause a fire or a malfunction of the charger.

If battery electrolyte leaks out, ensure that the electrolyte does not touch your skin or eyes. If the electrolyte touches your skin or splashes into your eyes, wash your eyes with clean water immediately and consult a doctor. **If there is a case of battery deformation, colour change, or abnormal heating while you charge, stop using the device immediately.**

If the power cable is damaged (for example, the cord is exposed or broken), or the plug loosens, stop using the cable at once.

- Do not dispose of the device in fire as it may explode. Batteries may also explode if damaged.
- Do not modify or re-manufacture, attempt to insert foreign objects into the device, immerse or expose to water or other liquids, expose to fire, explosion or other hazard.
- Avoid dropping the device. If the device is dropped, especially on a hard surface, and the user suspects damage, take it to a qualified service centre for inspection.
- Improper use may result in a fire, explosion or other hazard.
- Promptly dispose of used devices in accordance with local regulations.
- The device should only be connected to products that bear the USB-IF logo or have completed the USB-IF compliance program.

Output rating of charger DC 5V 2A.
CAUTION – RISK OF EXPLOSION IF BATTERY IS REPLACED BY AN INCORRECT TYPE. DISPOSE OF USED BATTERIES ACCORDING TO THE INSTRUCTIONS. Non-serviceable other than by authorised centres who will dispose of the battery in accordance with WEEE.

13.3 Cleaning and Maintenance

- As the charger is not water-resistant, keep it dry and away from water or vapour. Do not touch the charger with wet hands.
- Do not place your device and charger in places where they can get damaged.
- Do not place magnetic storage media such as magnetic cards near the device. Radiation from the device may erase the information stored on them.
- Do not leave your device and charger in a place with an extreme high or low temperature. When the temperature is lower than 0°C, performance of the battery is affected.
- Do not place sharp metal objects such as pins near the earpiece.
- Before you clean or maintain the device, power off the device and disconnect it from the charger.
- Do not use any chemical detergent, powder, or other chemical agents (such as alcohol and benzene) to clean the device and the charger. You can clean the device with a soft anti-static cloth.
- Do not dismantle the device or accessories. If the device or accessories are tampered with, the warranty on the device and accessories will be void and the manufacturer will not be liable for any damage caused.
- If the device screen is broken, do not touch or try to remove the broken pieces. In this case, stop using the device immediately and contact an authorised service centre.

13.4 Prevention of Hearing Loss

-To prevent possible hearing damage, do not listen at high volume levels for long periods.

13.5 CE SAR Compliance

This device meets the EU requirements on the limitation of exposure of the general public to electromagnetic fields by way of health protection.

The limits are part of extensive recommendations for the protection of the general public. These recommendations have been developed and checked by independent scientific organisations through regular and thorough evaluations

of scientific studies. The unit of measurement for the European Council's recommended limit for mobile devices is the "Specific Absorption Rate" (SAR), and the SAR limit is 2.0 W/kg averaged over 10g of tissue. It meets the requirements of the International Commission on Non-Ionizing Radiation Protection (ICNIRP).

For body worn operation, this device has been tested and meets the ICNIRP exposure guidelines and the European Standard EN 62311 and EN 62209-2, for use with dedicated accessories. Use of other accessories which contain metals may not ensure compliance with ICNIRP exposure guidelines.

SAR is measured with the device at a separation of 0.5cm to the body, while transmitting at the highest certified output power level in all frequency bands of the mobile device.
The distance of 0.5cm shall be kept between body and device.

The highest reported SAR values under the CE regulatory for the phone are listed below:
Head SAR: 0.534 W/kg
Body SAR: 1.510 W/kg

13.6 Spectrum and Power

Spectrum	**Power**
GSM 900	28.87 dBm
GSM 1800	27.81 dBm
WCDMA B1	24.39 dBm
WCDMA B8	20.49 dBm
FDD-LTE B1	23.3 dBm
FDD-LTE B3	21.3 dBm
FDD-LTE B7	16.62 dBm
FDD-LTE B20	19.37 dBm
WI-FI 2.4G	15.28 dBm
WI-FI 5G	band 1 8.36 dBm band 2 7.79 dBm band 3 8.46 dBm band 4 5.93 dBm
BT 2.0	7.44 dBm
BT 4.1	2.75 dBm
NFC	-12.38dBuA/m

13.7 EU Compliance Statement

This device is restricted to indoor use only when operating in the 5150 to 5350 MHz frequency range.

Restrictions in:
Belgium (BE), Bulgaria (BG), Czech Republic (CZ), Denmark (DK), Germany (DE), Estonia (EE), Ireland (IE), Greece (EL), Spain (ES), France (FR), Croatia (HR), Italy (IT), Cyprus (CY), Latvia (LV), Lithuania (LT), Luxembourg (LU), Hungary (HU), Malta (MT), Netherlands (NL), Austria (AT), Poland (PL), Portugal (PT), Romania (RO), Slovenia (SI), Slovakia (SK), Finland (FI), Sweden (SE), United Kingdom (UK), Switzerland (CH), Norway (NO), Iceland (IS), Liechtenstein (LI) and Turkey (TR).

Disposal and Recycling Information

This symbol on the device (and any included batteries) indicates that they should not be disposed of as normal household garbage. Do not dispose of your device or batteries as unsorted municipal waste. The device (and any batteries) should be handed over to a certified collection point for recycling or proper disposal at the end of their life.

For more detailed information about the recycling of the device or batteries, contact your local city office, the household waste disposal service, or the retail store where you purchased this device.

The disposal of this device is subject to the Waste from Electrical and Electronic Equipment (WEEE) directive of the European Union. The reason for separating WEEE and batteries from other waste is to minimise the potential environmental impacts on human health of any hazardous substances that may be present.

Reduction of Hazardous Substances

This device is compliant with the EU Registration, Evaluation, Authorization and Restriction of Chemicals (REACH) Regulation (Regulation No 1907/2006/EC of the European Parliament and of the Council) and the EU Restriction of Hazardous Substances (RoHS) Directive (Directive 2011/65/EU of the European Parliament and of the Council).

Declaration of Conformity

Hereby, Bullitt Mobile Ltd. declares that the radio equipment type Ektra is in compliance with Directive 2014/53/EU. The full text of the EU declaration of conformity is available at the following internet address:
www.kodakphones.com/support.

Legal Attribution

Android, Google, Google Play, Google Play logo and other marks are trademarks of Google Inc.

Declaration of Conformity

Manufacturer:

Name:	Bullitt Group
Address:	One Valpy, Valpy Street, Reading, Berkshire, RG1 1AR, UK

Radio Equipment:

Model:	EKTRA
Description:	Smartphone
Marketing Name:	KODAK EKTRA Smartphone
Radio-related Software Version:	LTE_S0105121. 1
Supplied Accessories and Components:	Adpater, USB cable, Earphone

We, Bullitt Group, declare under our sole responsibility that the product described above is in conformity with the relevant Union harmonization legislations:

RE Directive (2014/53/EU), RoHS Directive (2011/65/EU)

The following harmonized standards and/or other relevant standards have been applied:

1. **Health and Safety (Article 3.1(a) of the RE Directive)**
   EN 62311:2008, EN 62479:2010
   EN 50360:2001/A1:2012, EN 62209-1:2006
   EN 50566:2013/AC:2014, EN 62209-2:2010
   EN 60950-1:2006/A11:2009+A1:2010+A12:2011+A2:2013
   EN 50332-1:2013, EN 50332-2:2013

2. **Electromagnetic compatibility (Article 3.1 (b) of the RE Directive)**
   Draft ETSI EN 301 489-1 V2.1.0, Draft ETSI EN 301 489-3 V2.1.0
   Draft ETSI EN 301 489-17 V3.1.0
   Commission Draft ETSI EN 301 489-52 V1.1.1_0.0.5
   EN 55032:2012/AC:2013 Class B, EN 55032:2015 Class B
   EN 55024:2010
   EN 61000-3-2:2014 Class A, EN 61000-3-3:2013

3. **Radio frequency spectrum usage (Article 3.2 of the RE Directive)**
   ETSI EN 301 908-1 V11.1.1, ETSI EN 301 908-2 V11.1.1
   ETSI EN 301 908-13 V11.1.1
   Draft ETSI EN 300 440 V2.1.0
   Draft ETSI EN 300 330 V2.1.0
   Final Draft ETSI EN 300 328 V2.1.0
   Commission Draft ETSI EN 301 893 V2.0.0_v0.0.9
   Commission Draft ETSI EN 301 511 V12.5.1_12.1.6

4. **RoHS Directive (2011/65/EU)**
   EN 50581:2012

The notified body **(Name: CETECOM ICT SERVICES GMBH, ID: 0682)** performed the conformity assessment according to Annex III of the RE Directive and issued the EU-type examination certificate
(Ref. No.: T817663D-01-TEC).

Signed for and on behalf of: **Bullitt Group**,
Place: One Valpy, Valpy Street, Reading, Berkshire, RG1 1AR, UK,
Date: October 26, 2016
Name: Wayne Huang, Function: Director of ODM Management

Signature: 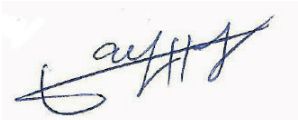

FCC Statement

This mobile phone complies with part 15 of the FCC Rules. Operation is subject to the following two conditions: (1) This device may not cause harmful interference, and (2) this device must accept any interference received, including interference that may cause undesired operation.

This mobile phone has been tested and found to comply with the limits for a Class B digital device, pursuant to Part 15 of the FCC Rules. These limits are designed to provide reasonable protection against harmful interference in a residential installation. This equipment generates, uses and can radiated radio frequency energy and, if not installed and used in accordance with the instructions, may cause harmful interference to radio communications. However, there is no guarantee that interference will not occur in a particular installation If this equipment does cause harmful interference to radio or television reception, which can be determined by turning the equipment off and on, the user is encouraged to try to correct the interference by one or more of the following measures:

- Reorient or relocate the receiving antenna.
- Increase the separation between the equipment and receiver.
- Connect the equipment into an outlet on a circuit different from that to which the receiver is connected.
- Consult the dealer or an experienced radio/TV technician for help.

FCC Note:
Caution: Changes or modifications not expressly approved by the party responsible for compliance could void the user's authority to operate the equipment.

RF Exposure Information (SAR)

This phone is designed and manufactured not to exceed the emission limits for exposure to radio frequency (RF) energy set by the Federal Communications Commission of the United States.

During SAR testing, this device was set to transmit at its highest certified power level in all tested frequency bands, and placed in positions that simulate RF exposure in usage against the head with no separation, and near the body with the separation of 10 mm. Although the SAR is determined at the highest certified power level, the actual SAR level of the device while operating can be well below the maximum value. This is because the phone is designed to operate at multiple power levels so as to use only the power required to reach the network. In general, the closer you are to a wireless base station antenna, the lower the power output.

The exposure standard for wireless devices employing a unit of measurement is known as the Specific Absorption Rate, or SAR.

The SAR limit set by the FCC is 1.6W/kg.

This device is complied with SAR for general population /uncontrolled exposure limits in ANSI/IEEE C95.1-1992 and had been tested in accordance with the measurement methods and procedures specified in IEEE1528.

The FCC has granted an Equipment Authorization for this model phone with all reported SAR levels evaluated as in compliance with the FCC RF exposure guidelines. SAR information on this model phone is on file with the FCC and can be found under the Display Grant section of www.fcc.gov/oet/ea/fccid after searching on FCC ID: ZL5EKTRA

For this device, the highest reported SAR value for usage against the head is 0.64 W/kg, for usage near the body is 1.16 W/kg.

While there may be differences between the SAR levels of various phones and at various positions, they all meet the government requirements.

SAR compliance for body-worn operation is based on a separation distance of 10 mm between the unit and the human body. Carry this device at least 10 mm away from your body to ensure RF exposure level compliant or lower to the reported level. To support body-worn operation, choose the belt clips or holsters, which do not contain metallic components, to maintain a separation of 10 mm between this device and your body.

RF exposure compliance with any body-worn accessory, which contains metal, was not tested and certified, and use such body-worn accessory should be avoided.

Hearing Aid Compatibility (HAC) regulations for Mobile phones

In 2003, the FCC adopted rules to make digital wireless telephones compatible with hearing aids and cochlear implants. Although analog wireless phones do not usually cause interference with hearing aids or cochlear implants, digital wireless phones sometimes do because of electromagnetic energy emitted by the phone's antenna, backlight, or other components. Your phone is compliant with FCC HAC regulations (ANSI C63.19- 2011). While some wireless phones are used near some hearing devices (hearing aids and cochlear implants), users may detect a buzzing, humming, or whining noise. Some hearing devices are more immune than others to this interference noise and phones also vary in the amount of interference they generate. The wireless telephone industry has developed a rating system for wireless phones to assist hearing device users in finding phones that may be compatible with their hearing devices. Not all phones have been rated. Phones that are rated have the rating on their box or a label located on the box. The ratings are not guarantees. Results will vary depending on the user's hearing device and hearing loss. If your hearing device happens to be vulnerable to interference, you may not be able to use a rated phone successfully. Trying out the phone with your hearing device is the best way to evaluate it for your personal needs.

This phone has been tested and rated for use with hearing aids for some of the wireless technologies that it uses. However, there may be some newer wireless technologies used in this phone that have not been tested yet for use with hearing aids. It is important to try the different features of this phone thoroughly and in different locations, using your hearing aid or cochlear implant, to determine if you hear any interfering noise. Consult your service provider or the manufacturer of this phone for information on hearing aid compatibility. If you have questions about return or exchange policies, consult your service provider or phone retailer.

M-Ratings: Phones rated M3 or M4 meet FCC requirements and are likely to generate less interference to hearing devices than phones that are not labeled. M4 is the better/higher of the two ratings.
T-Ratings: Phones rated T3 or T4 meet FCC requirements and are likely to be more usable with a hearing device's telecoil ("T Switch" or "Telephone Switch") than unrated phones. T4 is the better/ higher of the two ratings. (Note that not all hearing devices have telecoils in them.)

This device meets the M3/T3 level rating.

ISED Notice

This device complies with Innovation, Science and Economic Development Canada license-exempt RSS standard(s). Operation is subject to the following two conditions:

1. this device may not cause interference, and
2. this device must accept any interference, including interference that may cause undesired operation of the device.

Le présent appareil est conforme aux CNR Innovation, Sciences et Développement économique Canada applicables aux appareils radio exempts de licence. L'exploitation est autorisée aux deux conditions suivantes:

1. l'appareil ne doit pas produire de brouillage, et
2. l'utilisateur de l'appareil doit accepter tout brouillage radioélectrique subi, même si le brouillage est susceptible d'en

This Class B digital apparatus complies with Canadian ICES-003.
Cet appareil numérique de la classe B est conforme à la norme NMB-003 du Canada.

IC: 11151A-EKTRA

ISED Radiation Exposure Statement

This EUT is compliance with SAR for general population/uncontrolled exposure limits in ISED RSS-102 and had been tested in accordance with the measurement methods and procedures specified in IEEE 1528 and IEC 62209. This equipment should be installed and operated with minimum distance 1 cm between the radiator and your body. This device and its antenna(s) must not be co-located or operating in conjunction with any other antenna or transmitter.

Cet appareil est conforme aux limites d'exposition DAS incontrôlée pour la population générale de la norme CNR-102 d'Industrie Canada et a été testé en conformité avec les méthodes de mesure et procédures spécifiées dans IEEE 1528 et IEC 62209. Cet appareil doit être installé et utilisé avec une distance minimale de 1 cm entre l'émetteur et votre corps. Cet appareil et sa ou ses antennes ne doivent pas être co-localisés ou fonctionner en conjonction avec tout autre antenne ou transmetteur.

The device for operation in the band 5150–5250 MHz is only for indoor use in Canada.

Made for and Distributed by Bullitt Mobile Ltd. under license from Eastman Kodak Company.
The Kodak and Ektra trademarks, Kodak logo and trade dress are used under license from Eastman Kodak Company.
Made in China.

© 2016 Bullitt Mobile Ltd. | www.kodakphones.com

Manufacturer Contact Details: Bullitt Mobile Ltd: One Valpy, Valpy Street, Reading, Berkshire, England RG1 1AR