System Check_Head_750MHz

DUT: D750V3-1012

Communication System: CW; Frequency: 750 MHz;Duty Cycle: 1:1
Medium: HSL_750_170917 Medium parameters used: f = 750 MHz; σ = 0.896 S/m; ε_r = 40.606; ρ = 1000 kg/m^3
Ambient Temperature：23.3 ℃; Liquid Temperature：22.3 ℃

DASY5 Configuration:
- Probe: EX3DV4 - SN3925; ConvF(10.82, 10.82, 10.82); Calibrated: 2017/5/24;
- Sensor-Surface: 1.4mm (Mechanical Surface Detection)
- Electronics: DAE3 Sn495; Calibrated: 2017/5/22
- Phantom: SAM_Left; Type: QD000P40CD; Serial: TP:1815
- Measurement SW: DASY52, Version 52.8 (8);SEMCAD X Version 14.6.10 (7373)

Pin=250mW/Area Scan (61x61x1): Interpolated grid: dx=1.500 mm, dy=1.500 mm
Maximum value of SAR (interpolated) = 2.59 W/kg

Pin=250mW/Zoom Scan (5x5x7)/Cube 0: Measurement grid: dx=8mm, dy=8mm, dz=5mm
Reference Value = 55.34 V/m; Power Drift = -0.02 dB
Peak SAR (extrapolated) = 2.99 W/kg
SAR(1 g) = 2.05 W/kg; SAR(10 g) = 1.35 W/kg
Maximum value of SAR (measured) = 2.57 W/kg

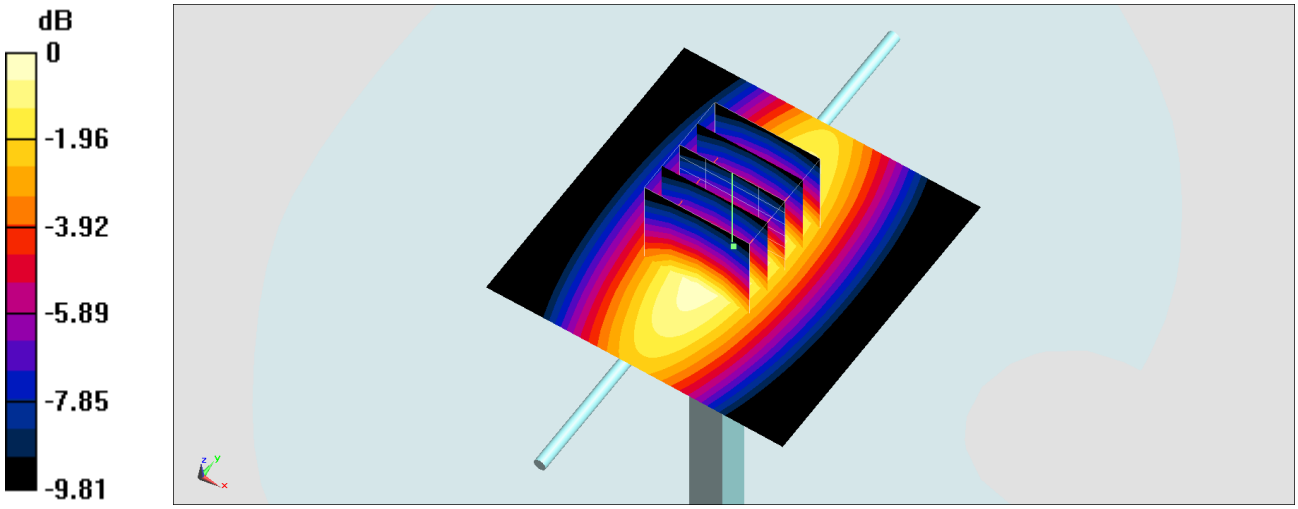

0 dB = 2.57 W/kg = 4.10 dBW/kg

System Check_Body_750MHz

DUT: D750V3-1012

Communication System: CW ; Frequency: 750 MHz;Duty Cycle: 1:1
Medium: MSL_750_170912 Medium parameters used: f = 750 MHz; σ = 0.974 S/m; ε_r = 55.566; ρ = 1000 kg/m^3
Ambient Temperature：23.4 ℃; Liquid Temperature：22.4 ℃

DASY5 Configuration
- Probe: ES3DV3 - SN3071; ConvF(5.7, 5.7, 5.7); Calibrated: 2016/12/8;
- Sensor-Surface: 3mm (Mechanical Surface Detection)
- Electronics: DAE4 Sn778; Calibrated: 2017/5/22
- Phantom: SAM_Left; Type: QD000P40CD; Serial: S/N:1796
- Measurement SW: DASY52, Version 52.8 (8); SEMCAD X Version 14.6.10 (7373)

Pin=250mW/Area Scan (61x61x1): Interpolated grid: dx=1.500 mm, dy=1.500 mm
Maximum value of SAR (interpolated) = 2.59 W/kg

Pin=250mW/Zoom Scan (5x5x7)/Cube 0: Measurement grid: dx=8mm, dy=8mm, dz=5mm
Reference Value = 52.46 V/m; Power Drift = 0.05 dB
Peak SAR (extrapolated) = 3.26 W/kg
SAR(1 g) = 2.24 W/kg; SAR(10 g) = 1.51 W/kg
Maximum value of SAR (measured) = 2.58 W/kg

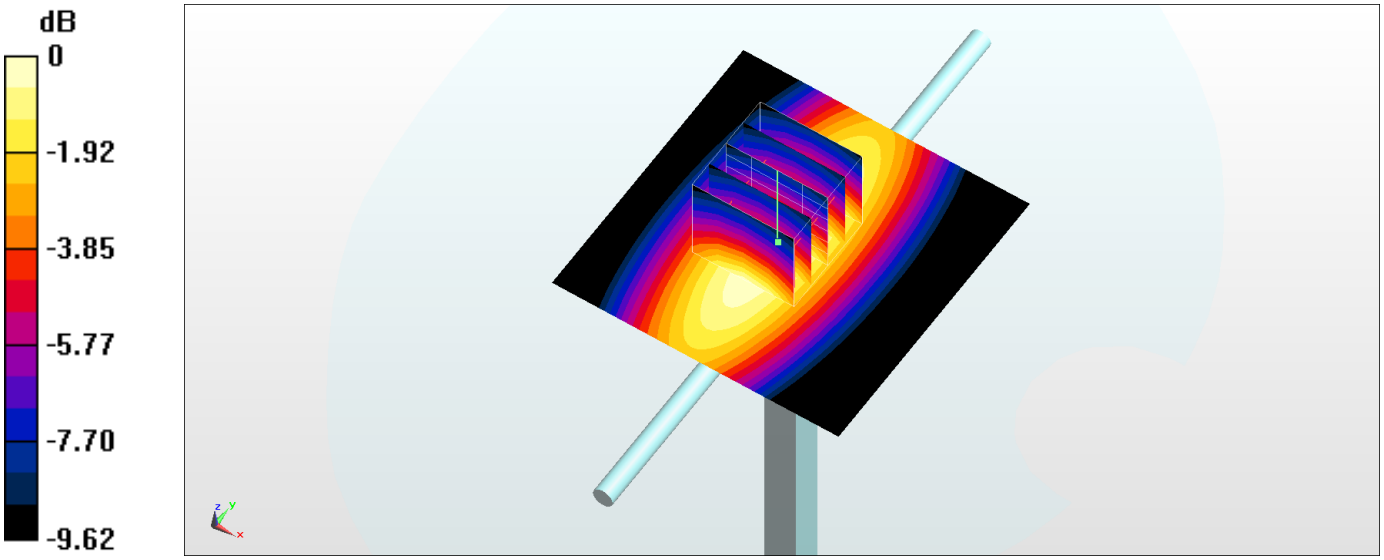

0 dB = 2.58 W/kg = 4.12 dBW/kg

System Check_Head_835MHz

DUT: D835V2-499

Communication System: CW; Frequency: 835 MHz;Duty Cycle: 1:1
Medium: HSL_850_170917 Medium parameters used: f = 835 MHz; σ = 0.89 S/m; ε_r = 42.382; ρ = 1000 kg/m^3
Ambient Temperature：23.3 ℃; Liquid Temperature：22.3 ℃

DASY5 Configuration:
- Probe: EX3DV4 - SN3925; ConvF(10.41, 10.41, 10.41); Calibrated: 2017/5/24;
- Sensor-Surface: 1.4mm (Mechanical Surface Detection)
- Electronics: DAE3 Sn495; Calibrated: 2017/5/22
- Phantom: SAM_Left; Type: QD000P40CD; Serial: TP:1815
- Measurement SW: DASY52, Version 52.8 (8);SEMCAD X Version 14.6.10 (7373)

Pin=250mW/Area Scan (61x61x1): Interpolated grid: dx=1.500 mm, dy=1.500 mm
Maximum value of SAR (interpolated) = 3.12 W/kg

Pin=250mW/Zoom Scan (5x5x7)/Cube 0: Measurement grid: dx=8mm, dy=8mm, dz=5mm
Reference Value = 61.44 V/m; Power Drift = 0.08 dB
Peak SAR (extrapolated) = 3.55 W/kg
SAR(1 g) = 2.39 W/kg; SAR(10 g) = 1.58 W/kg
Maximum value of SAR (measured) = 3.16 W/kg

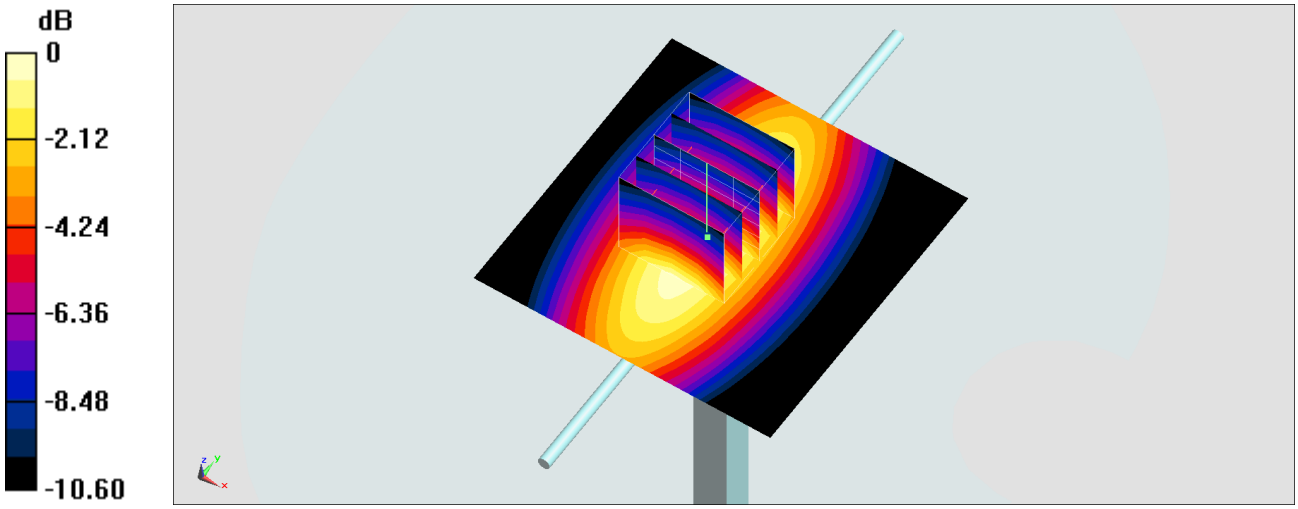

0 dB = 3.16 W/kg = 5.00 dBW/kg

System Check_Body_835MHz

DUT: D835V2-499

Communication System: CW; Frequency: 835 MHz;Duty Cycle: 1:1
Medium: MSL_850_170912 Medium parameters used: f = 835 MHz; σ = 1.003 S/m; ε_r = 57.5; ρ = 1000 kg/m^3
Ambient Temperature：23.4 ℃; Liquid Temperature：22.4 ℃

DASY5 Configuration
- Probe: ES3DV3 - SN3071; ConvF(5.68, 5.68, 5.68); Calibrated: 2016/12/8;
- Sensor-Surface: 3mm (Mechanical Surface Detection)
- Electronics: DAE4 Sn778; Calibrated: 2017/5/22
- Phantom: SAM_Left; Type: QD000P40CD; Serial: S/N:1796
- Measurement SW: DASY52, Version 52.8 (8); SEMCAD X Version 14.6.10 (7373)

Pin=250mW/Area Scan (61x61x1): Interpolated grid: dx=1.500 mm, dy=1.500 mm
Maximum value of SAR (interpolated) = 2.91 W/kg

Pin=250mW/Zoom Scan (5x5x7)/Cube 0: Measurement grid: dx=8mm, dy=8mm, dz=5mm
Reference Value = 55.19 V/m; Power Drift = 0.03 dB
Peak SAR (extrapolated) = 3.64 W/kg
SAR(1 g) = 2.51 W/kg; SAR(10 g) = 1.66 W/kg
Maximum value of SAR (measured) = 2.92 W/kg

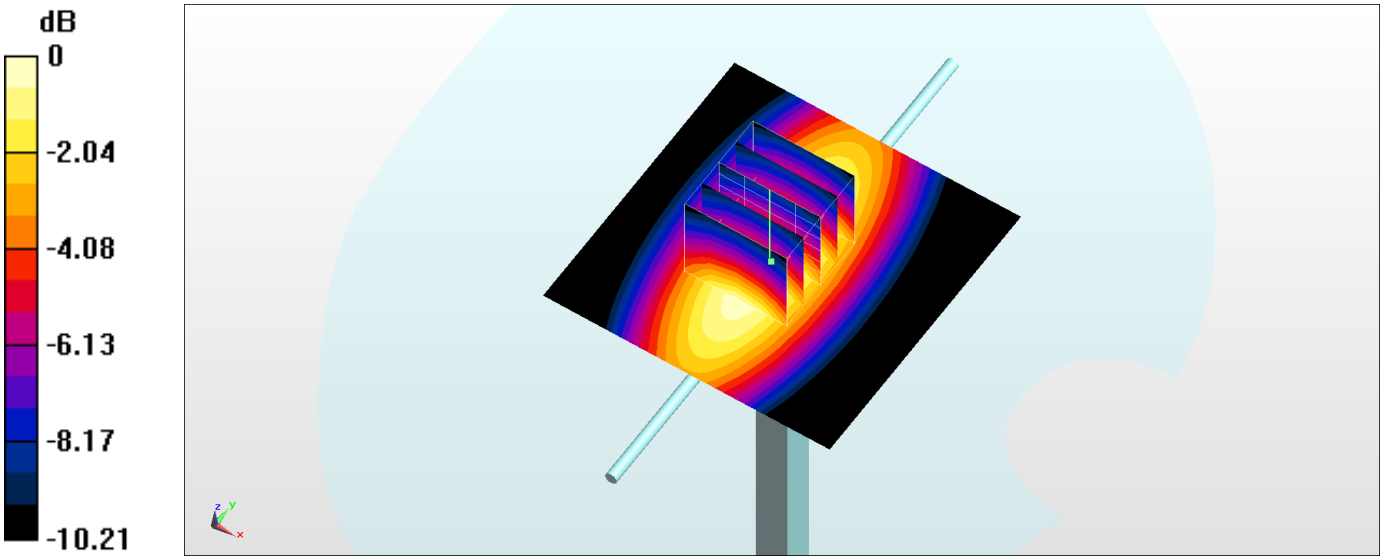

0 dB = 2.92 W/kg = 4.65 dBW/kg

System Check_Head_1750MHz

DUT: D1750V2-1068

Communication System: CW; Frequency: 1750 MHz;Duty Cycle: 1:1
Medium: HSL_1750_170916 Medium parameters used: f = 1750 MHz; σ = 1.361 S/m; ε_r = 39.15; ρ = 1000 kg/m^3
Ambient Temperature：23.4 ℃; Liquid Temperature：22.4 ℃

DASY5 Configuration:
- Probe: EX3DV4 - SN3925; ConvF(9, 9, 9); Calibrated: 2017/5/24;
- Sensor-Surface: 1.4mm (Mechanical Surface Detection)
- Electronics: DAE3 Sn495; Calibrated: 2017/5/22
- Phantom: SAM_Left; Type: QD000P40CD; Serial: TP:1815
- Measurement SW: DASY52, Version 52.8 (8);SEMCAD X Version 14.6.10 (7373)

Pin=250mW/Area Scan (61x61x1): Interpolated grid: dx=1.500 mm, dy=1.500 mm
Maximum value of SAR (interpolated) = 12.7 W/kg

Pin=250mW/Zoom Scan (5x5x7)/Cube 0: Measurement grid: dx=8mm, dy=8mm, dz=5mm
Reference Value = 96.22 V/m; Power Drift = 0.13 dB
Peak SAR (extrapolated) = 16.1 W/kg
SAR(1 g) = 9.1 W/kg; SAR(10 g) = 4.89 W/kg
Maximum value of SAR (measured) = 12.7 W/kg

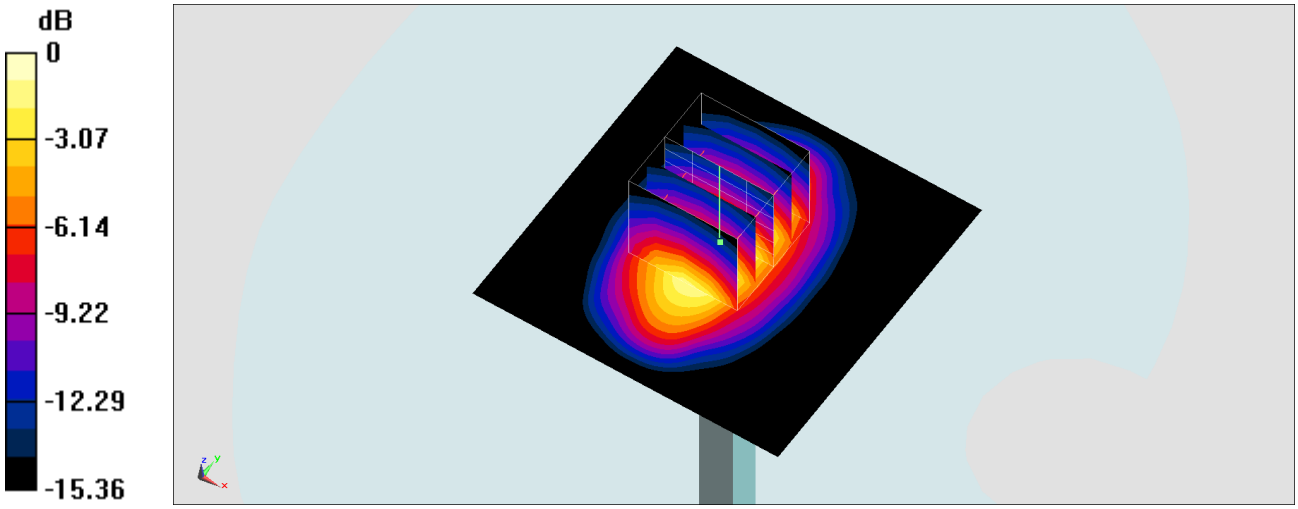

0 dB = 12.7 W/kg = 11.04 dBW/kg

System Check_Body_1750MHz

DUT: D1750V2-1068

Communication System: CW ; Frequency: 1750 MHz;Duty Cycle: 1:1
Medium: MSL_1750_170911 Medium parameters used: f = 1750 MHz; σ = 1.482 S/m; ε_r = 54.767; ρ = 1000 kg/m^3
Ambient Temperature：23.2 ℃; Liquid Temperature：22.2 ℃

DASY5 Configuration
- Probe: ES3DV3 - SN3071; ConvF(4.56, 4.56, 4.56); Calibrated: 2016/12/8;
- Sensor-Surface: 3mm (Mechanical Surface Detection)
- Electronics: DAE4 Sn778; Calibrated: 2017/5/22
- Phantom: SAM_Left; Type: QD000P40CD; Serial: S/N:1796
- Measurement SW: DASY52, Version 52.8 (8); SEMCAD X Version 14.6.10 (7373)

Pin=250mW/Area Scan (61x61x1): Interpolated grid: dx=1.500 mm, dy=1.500 mm
Maximum value of SAR (interpolated) = 12.2 W/kg

Pin=250mW/Zoom Scan (5x5x7)/Cube 0: Measurement grid: dx=8mm, dy=8mm, dz=5mm
Reference Value = 92.80 V/m; Power Drift = -0.05 dB
Peak SAR (extrapolated) = 16.0 W/kg
SAR(1 g) = 9.45 W/kg; SAR(10 g) = 5.18 W/kg
Maximum value of SAR (measured) = 11.5 W/kg

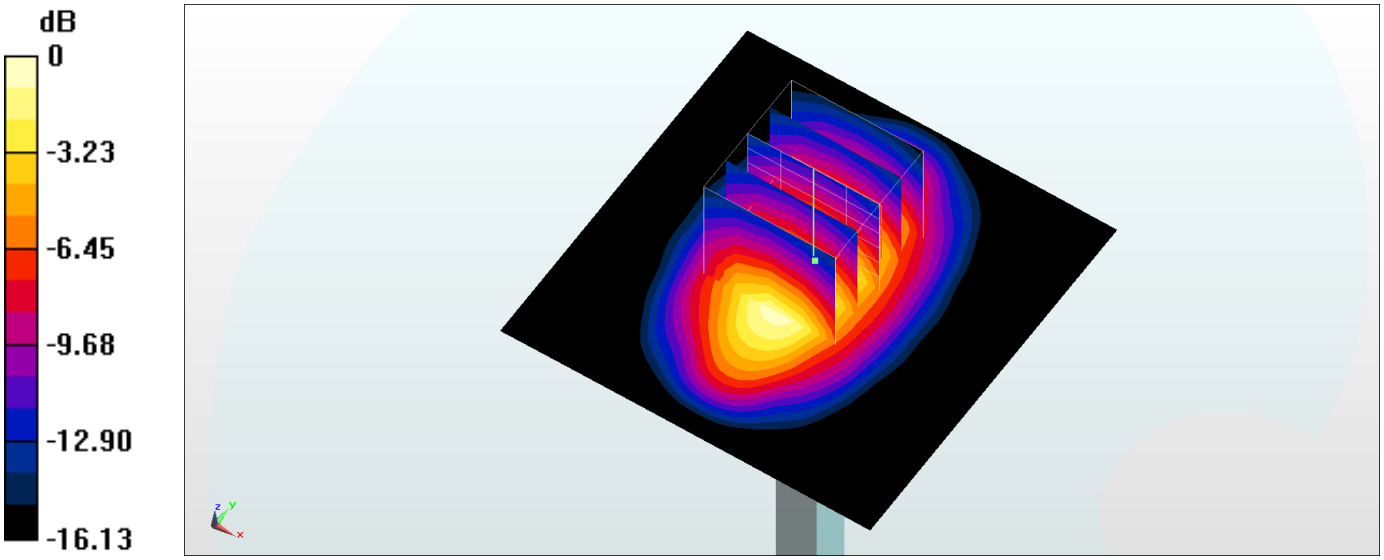

0 dB = 11.5 W/kg = 10.61 dBW/kg

System Check_Head_1900MHz

DUT: D1900V2-5d041

Communication System: CW; Frequency: 1900 MHz;Duty Cycle: 1:1
Medium: HSL_1900_170916 Medium parameters used: f = 1900 MHz; σ = 1.414 S/m; ε_r = 38.501; ρ = 1000 kg/m^3
Ambient Temperature：23.6 ℃; Liquid Temperature：22.6 ℃

DASY5 Configuration:
- Probe: EX3DV4 - SN3925; ConvF(8.73, 8.73, 8.73); Calibrated: 2017/5/24;
- Sensor-Surface: 1.4mm (Mechanical Surface Detection)
- Electronics: DAE3 Sn495; Calibrated: 2017/5/22
- Phantom: SAM_Left; Type: QD000P40CD; Serial: TP:1815
- Measurement SW: DASY52, Version 52.8 (8);SEMCAD X Version 14.6.10 (7373)

Pin=250mW/Area Scan (61x61x1): Interpolated grid: dx=1.500 mm, dy=1.500 mm
Maximum value of SAR (interpolated) = 14.6 W/kg

Pin=250mW/Zoom Scan (5x5x7)/Cube 0: Measurement grid: dx=8mm, dy=8mm, dz=5mm
Reference Value = 96.38 V/m; Power Drift = 0.10 dB
Peak SAR (extrapolated) = 17.7 W/kg
SAR(1 g) = 9.67 W/kg; SAR(10 g) = 5.07 W/kg
Maximum value of SAR (measured) = 14.6 W/kg

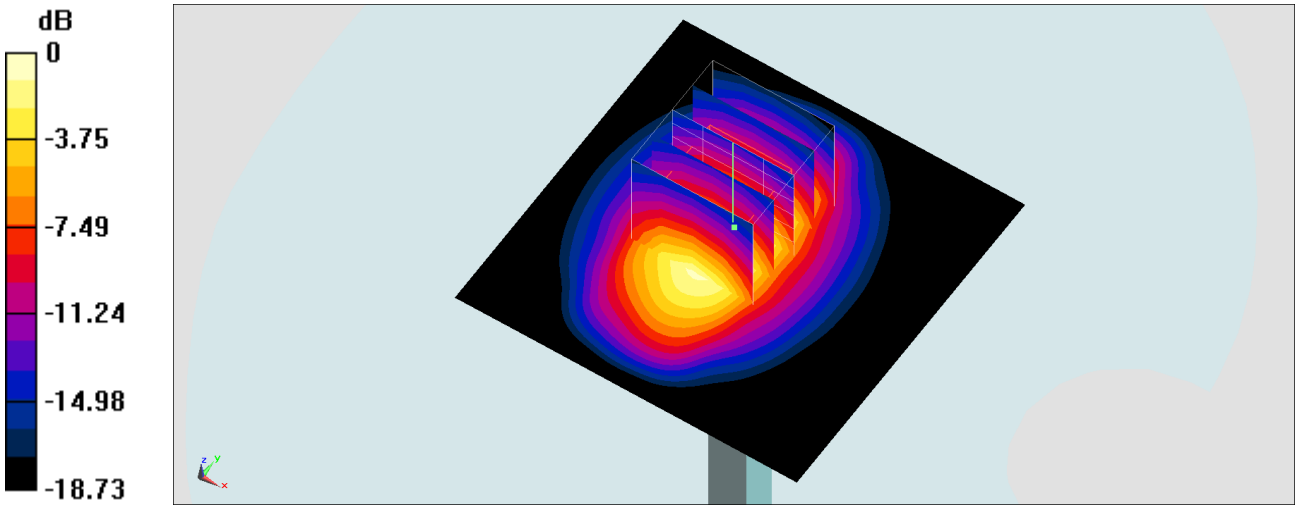

0 dB = 14.6 W/kg = 11.64 dBW/kg

System Check_Body_1900MHz

DUT: D1900V2-5d041

Communication System: CW ; Frequency: 1900 MHz;Duty Cycle: 1:1
Medium: MSL_1900_170911 Medium parameters used: f = 1900 MHz; σ = 1.574 S/m; ε_r = 53.685; ρ = 1000 kg/m^3
Ambient Temperature：23.2 ℃; Liquid Temperature：22.2 ℃

DASY5 Configuration
- Probe: ES3DV3 - SN3071; ConvF(4.23, 4.23, 4.23); Calibrated: 2016/12/8;
- Sensor-Surface: 3mm (Mechanical Surface Detection)
- Electronics: DAE4 Sn778; Calibrated: 2017/5/22
- Phantom: SAM_Left; Type: QD000P40CD; Serial: S/N:1796
- Measurement SW: DASY52, Version 52.8 (8); SEMCAD X Version 14.6.10 (7373)

Pin=250mW/Area Scan (61x61x1): Interpolated grid: dx=1.500 mm, dy=1.500 mm
Maximum value of SAR (interpolated) = 15.6 W/kg

Pin=250mW/Zoom Scan (5x5x7)/Cube 0: Measurement grid: dx=8mm, dy=8mm, dz=5mm
Reference Value = 90.92 V/m; Power Drift = -0.02 dB
Peak SAR (extrapolated) = 18.5 W/kg
SAR(1 g) = 10.6 W/kg; SAR(10 g) = 5.57 W/kg
Maximum value of SAR (measured) = 12.9 W/kg

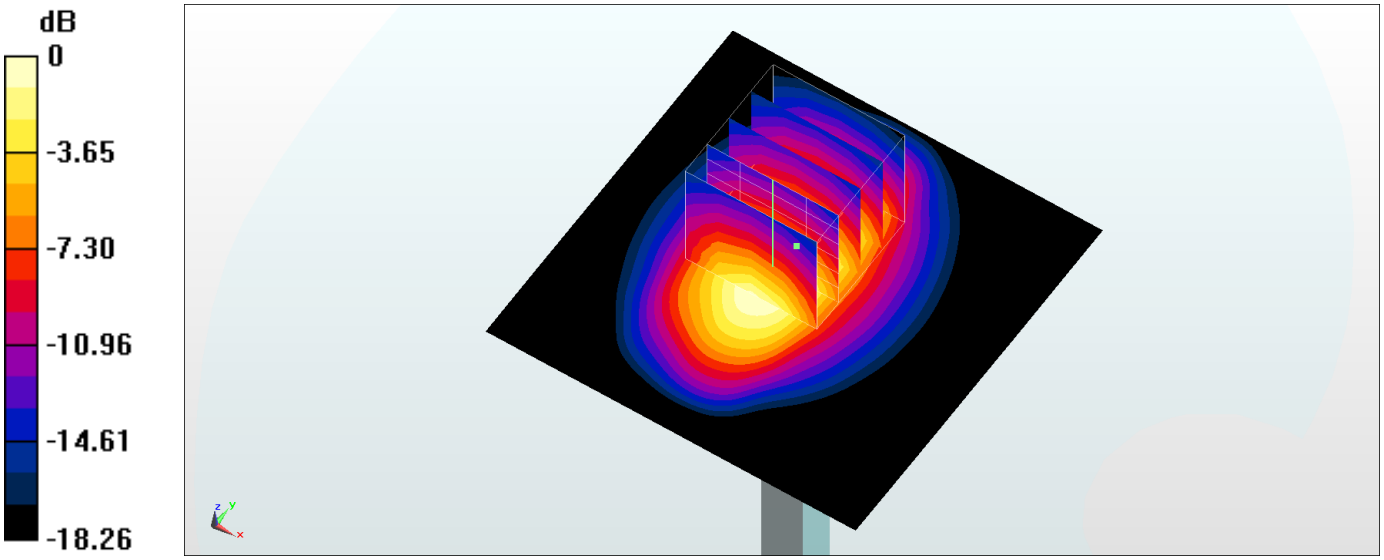

0 dB = 12.9 W/kg = 11.11 dBW/kg

System Check_Head_2450MHz

DUT: D2450V2-735

Communication System: CW; Frequency: 2450 MHz;Duty Cycle: 1:1
Medium: HSL_2450_170907 Medium parameters used: f = 2450 MHz; σ = 1.807 S/m; ε_r = 39.362; ρ = 1000 kg/m^3
Ambient Temperature：23.6 ℃; Liquid Temperature：22.6 ℃

DASY5 Configuration
- Probe: EX3DV4 - SN7306; ConvF(7.49, 7.49, 7.49); Calibrated: 2017/7/24;
- Sensor-Surface: 1.4mm (Mechanical Surface Detection)
- Electronics: DAE3 Sn577; Calibrated: 2016/9/28
- Phantom: SAM_RIGHT; Type: QD000P40CD; Serial: 1719
- Measurement SW: DASY52, Version 52.8 (8); SEMCAD X Version 14.6.10 (7373)

Pin=250mW/Area Scan (71x71x1): Interpolated grid: dx=1.200 mm, dy=1.200 mm
Maximum value of SAR (interpolated) = 19.5 W/kg

Pin=250mW/Zoom Scan (7x7x7)/Cube 0: Measurement grid: dx=5mm, dy=5mm, dz=5mm
Reference Value = 110.6 V/m; Power Drift = 0.04 dB
Peak SAR (extrapolated) = 26.1 W/kg
SAR(1 g) = 12.7 W/kg; SAR(10 g) = 5.95 W/kg
Maximum value of SAR (measured) = 21.2 W/kg

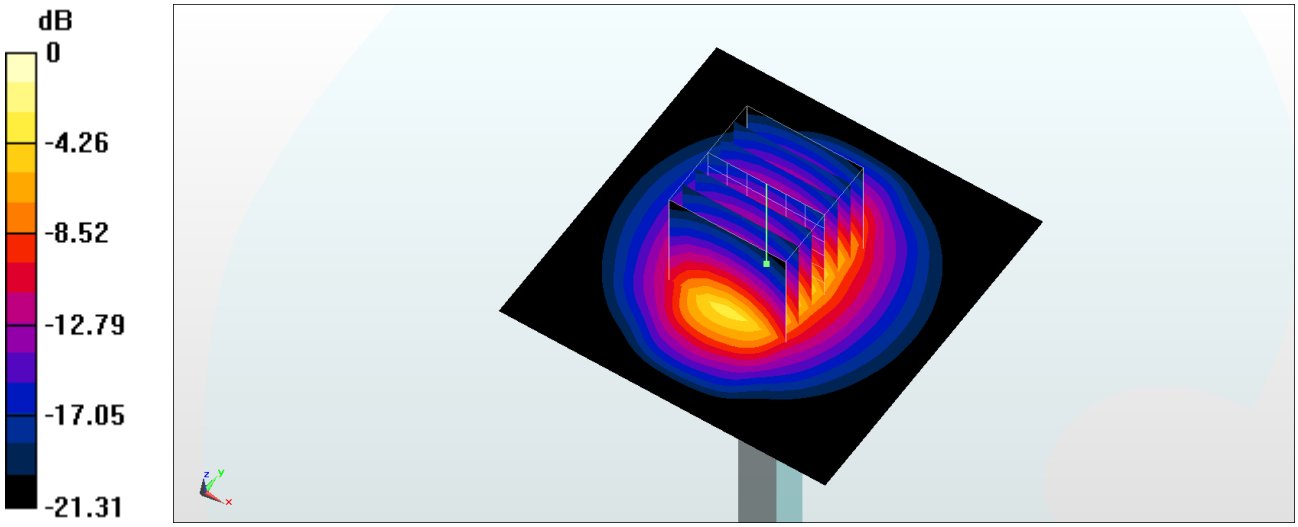

0 dB = 21.2 W/kg = 13.26 dBW/kg

System Check_Head_2450MHz

DUT: D2450V2-735

Communication System: CW; Frequency: 2450 MHz;Duty Cycle: 1:1
Medium: HSL_2450_170914 Medium parameters used: f = 2450 MHz; σ = 1.817 S/m; ε_r = 38.903; ρ = 1000 kg/m^3
Ambient Temperature：23.6 ℃; Liquid Temperature：22.6 ℃

DASY5 Configuration
- Probe: ES3DV3 - SN3071; ConvF(4.18, 4.18, 4.18); Calibrated: 2016/12/8;
- Sensor-Surface: 3mm (Mechanical Surface Detection)
- Electronics: DAE4 Sn778; Calibrated: 2017/5/22
- Phantom: SAM_Left; Type: QD000P40CD; Serial: S/N:1796
- Measurement SW: DASY52, Version 52.8 (8); SEMCAD X Version 14.6.10 (7373)

Pin=250mW/Area Scan (61x61x1): Interpolated grid: dx=1.200 mm, dy=1.200 mm
Maximum value of SAR (interpolated) = 17.4 W/kg

Pin=250mW/Zoom Scan (7x7x7)/Cube 0: Measurement grid: dx=5mm, dy=5mm, dz=5mm
Reference Value = 98.37 V/m; Power Drift = 0.03 dB
Peak SAR (extrapolated) = 26.6 W/kg
SAR(1 g) = 13.2 W/kg; SAR(10 g) = 6.18 W/kg
Maximum value of SAR (measured) = 17.2 W/kg

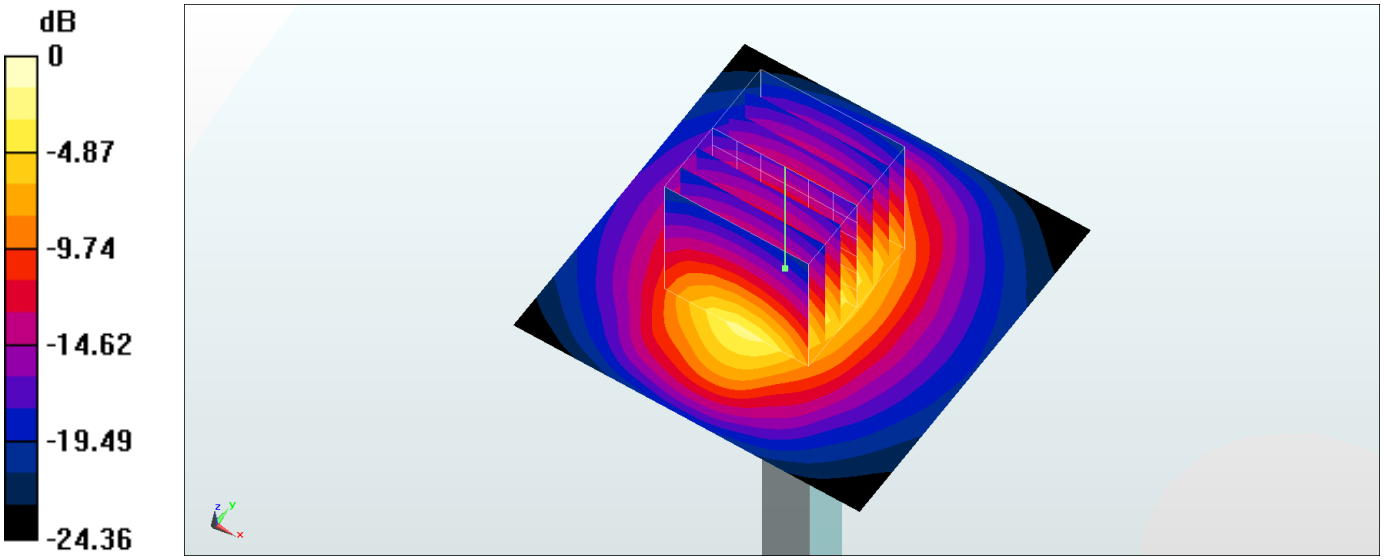

0 dB = 17.2 W/kg = 12.36 dBW/kg

System Check_Body_2450MHz

DUT: D2450V2-735

Communication System: CW; Frequency: 2450 MHz;Duty Cycle: 1:1
Medium: MSL_2450_170913 Medium parameters used: f = 2450 MHz; σ = 2.005 S/m; ε_r = 52.942; ρ = 1000 kg/m^3
Ambient Temperature：23.5 ℃; Liquid Temperature：22.5 ℃

DASY5 Configuration
- Probe: ES3DV3 - SN3071; ConvF(3.88, 3.88, 3.88); Calibrated: 2016/12/8;
- Sensor-Surface: 3mm (Mechanical Surface Detection)
- Electronics: DAE4 Sn778; Calibrated: 2017/5/22
- Phantom: SAM_Right; Type: QD000P40CD; Serial: S/N:1801
- Measurement SW: DASY52, Version 52.8 (8); SEMCAD X Version 14.6.10 (7373)

Pin=250mW/Area Scan (61x61x1): Interpolated grid: dx=1.200 mm, dy=1.200 mm
Maximum value of SAR (interpolated) = 16.7 W/kg

Pin=250mW/Zoom Scan (7x7x7)/Cube 0: Measurement grid: dx=5mm, dy=5mm, dz=5mm
Reference Value = 92.29 V/m; Power Drift = 0.06 dB
Peak SAR (extrapolated) = 24.8 W/kg
SAR(1 g) = 12.6 W/kg; SAR(10 g) = 5.9 W/kg
Maximum value of SAR (measured) = 16.3 W/kg

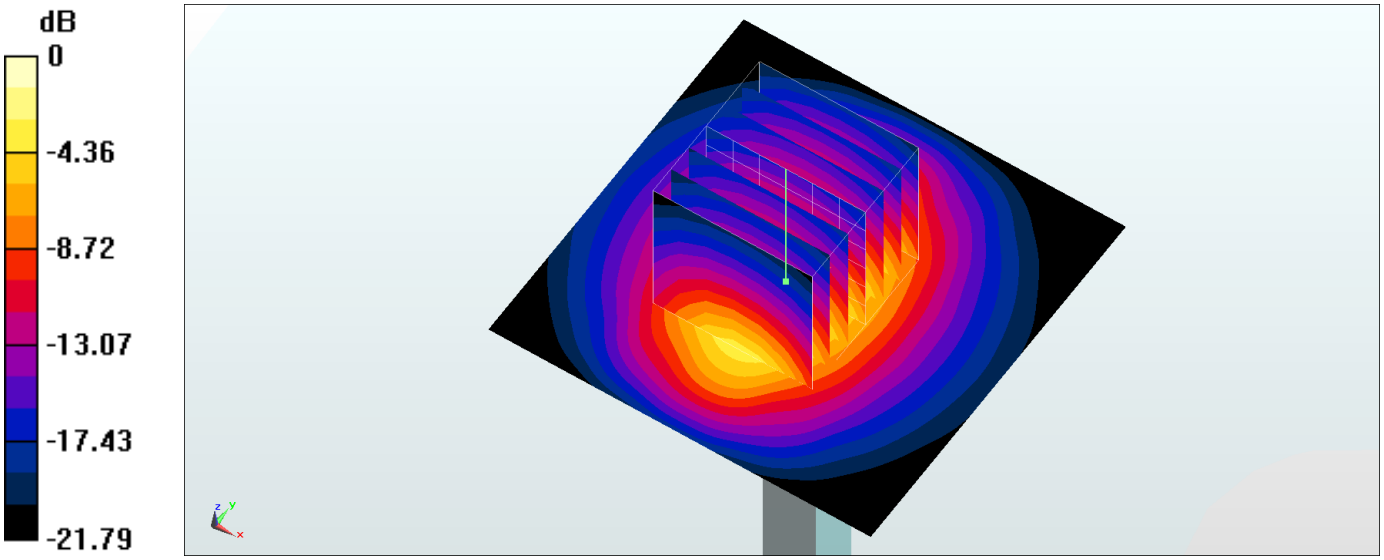

0 dB = 16.3 W/kg = 12.12 dBW/kg

System Check_Head_2600MHz

DUT: D2600V2-1058

Communication System: CW ; Frequency: 2600 MHz;Duty Cycle: 1:1
Medium: HSL_2600_170917 Medium parameters used: f = 2600 MHz; σ = 1.939 S/m; ε_r = 38.092; ρ = 1000 kg/m^3
Ambient Temperature：23.4 ℃; Liquid Temperature：22.4 ℃

DASY5 Configuration:
- Probe: EX3DV4 - SN3925; ConvF(7.61, 7.61, 7.61); Calibrated: 2017/5/24;
- Sensor-Surface: 1.4mm (Mechanical Surface Detection)
- Electronics: DAE3 Sn495; Calibrated: 2017/5/22
- Phantom: SAM_Left; Type: QD000P40CD; Serial: TP:1815
- Measurement SW: DASY52, Version 52.8 (8);SEMCAD X Version 14.6.10 (7373)

Pin=250mW/Area Scan (61x61x1): Interpolated grid: dx=1.200 mm, dy=1.200 mm
Maximum value of SAR (interpolated) = 20.6 W/kg

Pin=250mW/Zoom Scan (7x7x7)/Cube 0: Measurement grid: dx=5mm, dy=5mm, dz=5mm
Reference Value = 104.8 V/m; Power Drift = -0.06 dB
Peak SAR (extrapolated) = 27.6 W/kg
SAR(1 g) = 13.2 W/kg; SAR(10 g) = 5.9 W/kg
Maximum value of SAR (measured) = 20.5 W/kg

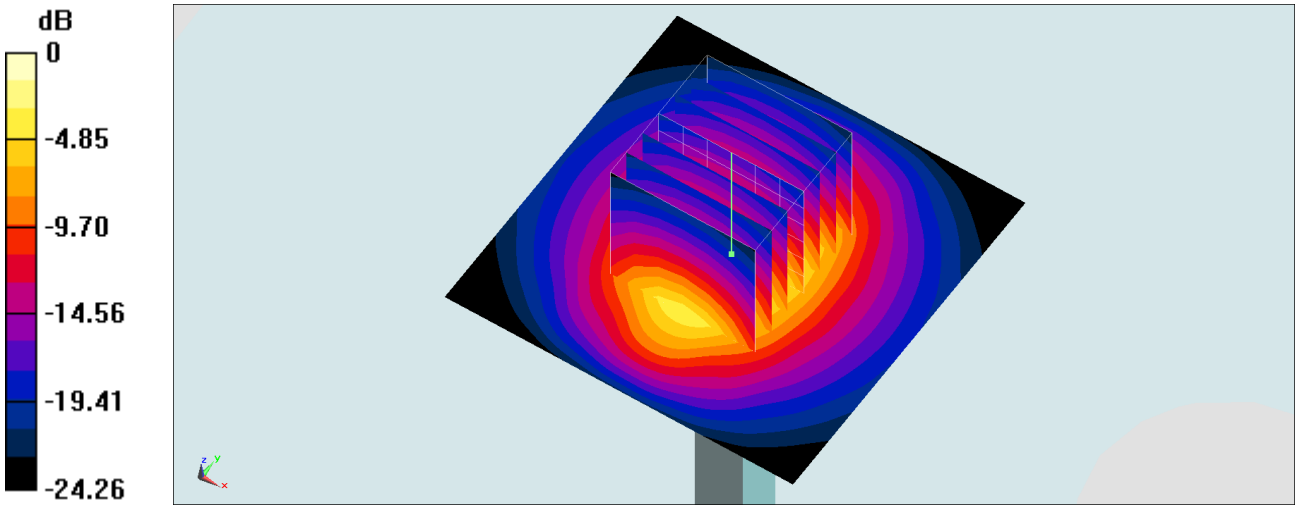

0 dB = 20.5 W/kg = 13.12 dBW/kg

System Check_Body_2600MHz

DUT: D2600V2-1058

Communication System: CW; Frequency: 2600 MHz;Duty Cycle: 1:1
Medium: MSL_2600_170911 Medium parameters used: f = 2600 MHz; σ = 2.189 S/m; ε_r = 53.165; ρ = 1000 kg/m^3
Ambient Temperature：23.2 ℃; Liquid Temperature：22.2 ℃

DASY5 Configuration
- Probe: ES3DV3 - SN3071; ConvF(3.74, 3.74, 3.74); Calibrated: 2016/12/8;
- Sensor-Surface: 3mm (Mechanical Surface Detection)
- Electronics: DAE4 Sn778; Calibrated: 2017/5/22
- Phantom: SAM_Right; Type: QD000P40CD; Serial: S/N:1801
- Measurement SW: DASY52, Version 52.8 (8); SEMCAD X Version 14.6.10 (7373)

Pin=250mW/Area Scan (71x71x1): Interpolated grid: dx=1.200 mm, dy=1.200 mm
Maximum value of SAR (interpolated) = 19.9 W/kg

Pin=250mW/Zoom Scan (7x7x7)/Cube 0: Measurement grid: dx=5mm, dy=5mm, dz=5mm
Reference Value = 93.50 V/m; Power Drift = 0.07 dB
Peak SAR (extrapolated) = 28.9 W/kg
SAR(1 g) = 14.1 W/kg; SAR(10 g) = 6.34 W/kg
Maximum value of SAR (measured) = 18.9 W/kg

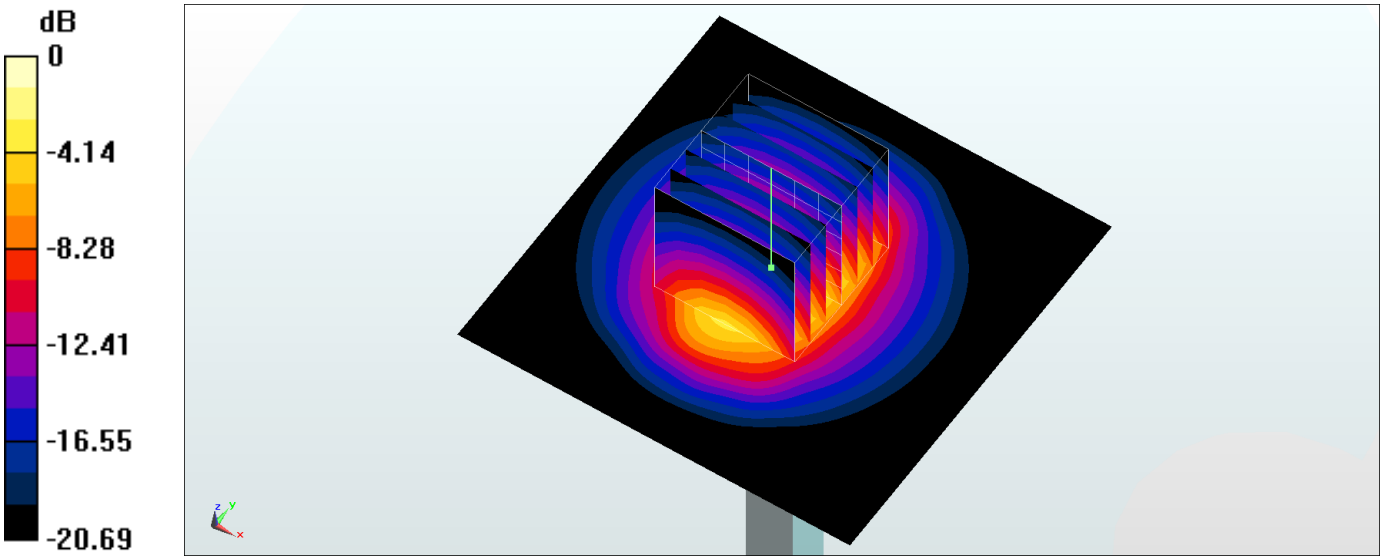

0 dB = 18.9 W/kg = 12.76 dBW/kg