Cat® S41 Smartphone
User manual

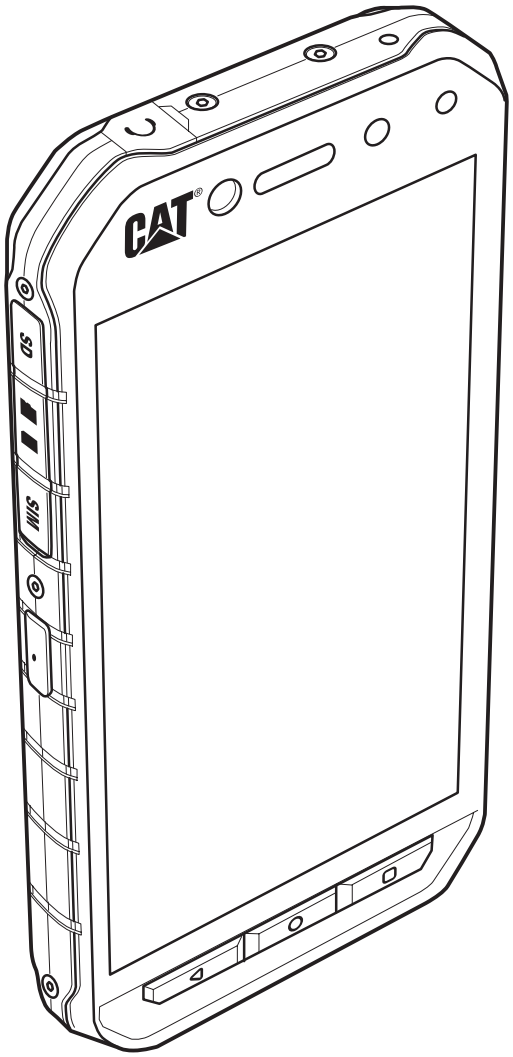

Please Read Before Proceeding

Safety Precautions

Please read the safety precautions carefully to ensure the correct use of your mobile phone.

Despite the nature of this rugged device, avoid hitting, throwing, dropping, crushing, bending and puncturing, your mobile phone.

Avoid using your mobile phone in a damp environment, such as the bathroom. Prevent your mobile phone from being intentionally soaked or washed in liquid.

Do not switch on your mobile phone when it is prohibited to use phones or when the phone may cause interference or danger.

Do not use your mobile phone while driving.

Follow any rules or regulations in hospitals and health care facilities. Switch off your mobile phone near medical apparatus.

Switch off your mobile phone in aircraft. The phone may cause interference to control equipment of the aircraft.

Switch off your mobile phone near high-precision electronic devices. The phone may affect the performance of these devices.

Do not attempt to disassemble your mobile phone or its accessories. Only qualified personnel are allowed to service or repair the phone.

Do not place your mobile phone or its accessories in containers with a strong electromagnetic field.

Do not place magnetic storage media near your mobile phone. Radiation from the phone may erase the information stored on them.

Do not put your mobile phone in a high-temperature place or use it in a place with flammable gas such as a gas station.

Keep your mobile phone and its accessories away from young children. Do not allow children to use your mobile phone without guidance.

Use only approved batteries and chargers to avoid the risk of explosions.

Observe any laws or regulations on the use of wireless devices. Respect others' privacy and legal rights when using your wireless device.

Do not use the mobile phone in airplanes, hospital, gas stations, or professional garages.

For medical implants patient (heart, insuline, etc), keep the mobile phone 15cm away from the implant and, while calling, keep the phone on the opposite side of the implant.

Strictly follow the relevant instructions of this manual while using the USB cable. Otherwise your mobile phone or PC may be damaged.

Legal Notice

© 2017 Caterpillar. All Rights Reserved.

CAT, CATERPILLAR, BUILT FOR IT, their respective logos, “Caterpillar Yellow,” the “Power Edge” trade dress as well as corporate and product identity used herein, are trademarks of Caterpillar and may not be used without permission.

Bullitt Mobile Ltd is a licensee of Caterpillar Inc.

Bullitt Mobile Ltd.’s and third-party trademarks are the property of their respective owners.

No part of this document may be reproduced or transmitted in any form or by any means without prior written consent of Caterpillar Inc.

The product described in this manual may include copyrighted software and possible licensors. Customers shall not in any manner reproduce, distribute, modify, decompile, disassemble, decrypt, extract, reverse engineer, lease, assign, or sublicense the said software or hardware, unless such restrictions are prohibited by applicable laws or such actions are approved by respective copyright holders under licenses.

The Bluetooth® word mark and logos are registered trademarks owned by the Bluetooth SIG, Inc. and any use of such marks by Bullitt Group is under license. All other third-party trademarks and trade names are those of their respective owners.

Wi-Fi® is a registered trademark of Wi-Fi Alliance® .

Notice

Some features of the product and its accessories described herein rely on the software installed, capacities and settings of local network, and may not be activated or may be limited by local network operators or network service providers. Thus the descriptions herein may not exactly match the product or its accessories you purchase.

The manufacturer reserves the right to change or modify any information or specifications contained in this manual without prior notice or obligation.

The manufacturer is not responsible for the legitimacy and quality of any products that you upload or download through this mobile phone, including but not limited to the text, pictures, music, movies, and non-built-in software with copyright protection. Any consequences arising from the installation or usage of the preceding products on this mobile phone shall be borne by yourself.

NO WARRANTY

The contents of this manual are provided “as is”. Except as required by applicable laws, no warranties of any kind, either express or implied, including but not limited to, the implied warranties of merchantability and fitness for a particular purpose, are made in relation to the accuracy, reliability or contents of this manual.

To the maximum extent permitted by applicable law, in no case shall the manufacturer be liable for any special, incidental, indirect, or consequential damages, or lost profits, business, revenue, data, goodwill or anticipated savings.

Import and Export Regulations

Customers shall comply with all applicable export or import laws and regulations and will obtain all necessary governmental permits and licenses in order to export, re-export or import the product mentioned in this manual including the software and technical data therein.

Contents

Welcome to the Cat® S41 Smartphone **1**
Basic functions 1
Key functions 1
Getting started 2
Powering on your mobile phone 4
Touchscreen 4
Home screen 4
Locking and unlocking the screen 5
Display **6**
Display layout 6
Notification panel 7
Shortcut icons 7
Widgets 8
Folders 8
Wallpapers 8
Transferring media to and from your mobile phone 9
Using the Airplane mode 9
Phone **10**
Making a call 10
Answering and rejecting a call 11
Other operations during a call 11
Contacts **12**
Communicating with your contacts 13
Using the on-screen keyboard 14
Wi-Fi® **14**
SMS and MMS **15**
Bluetooth® **17**
Taking photos and recording videos **18**
Enjoying music 21
Listening to FM radio 22
Google™ Services **23**
Google Maps **25**
Using Google Play Store **26**

Synchronizing information **27**
Managing your accounts 27
Customizing your account synchronization 28
Using other applications **28**
Using the calendar 28
Using the alarm 29
Calculator 29
Managing your mobile phone **30**
Setting the date and time 30
Setting the display 30
Setting phone ringtone 31
Configuring the programmable key 32
Setting phone services 32
Protecting your mobile phone 33
Using NFC 33
Managing applications 34
Resetting your mobile phone 34
Hardware reset of your device 35
Viewing E-label 35
Appendix **36**
Warnings and Precautions 36
Accessories 37
Cleaning and maintenance 38
Hearing Aid Compatibility (HAC) 39
Emergency call 39
FCC statement 39
Industry Canada Statement 40
RF exposure information (SAR) 41
Prevention of hearing loss 41
CE SAR Compliance 42
Disposal and recycling information 42
S41 specification 45

Welcome to the Cat® S41 Smartphone

The S41 smartphone is designed for the outdoors, with features to cope with challenging environments. It is certified to the highest industry standard for ruggedness, IP68, so it can survive depths of up to 2 meters for 60 minutes and it can also take underwater photographs and video. It also supports glove and wet-finger compatible touchscreen. It has a scratch-resistant glass, is dustproof and can withstand being dropped from a height of 1.8m Complementing the durable design features, the S41 boasts performance enhancing applications enabling you to enjoy web browsing, messaging, music and more with its high capacity battery and expandable memory of up to 128GB.

Basic functions

Phone at a glance

1. Headset jack
2. Front camera
3. Earpiece
4. Microphones
5. Recent Apps button
6. Speaker
7. Home button
8. Back button
9. Programmable key
10. SIM card slot
11. MicroSD card slot
12. 13MP camera
13. Flash
14. USB port
15. Volume up/down key
16. Power key

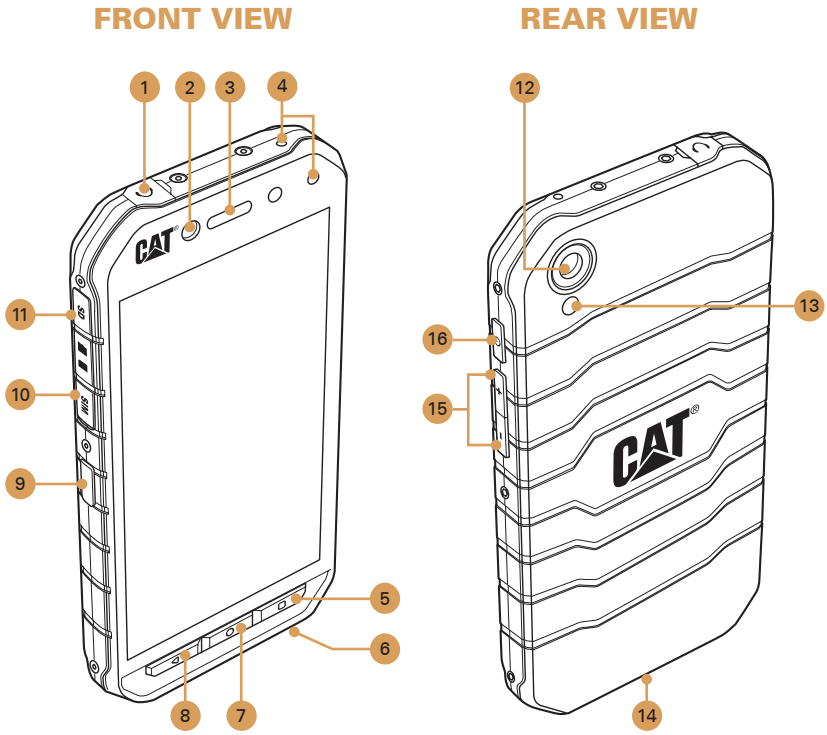

Key functions

Power key	• Press to turn on your mobile phone. • Press and hold to open the Phone options menu. • Press to lock or wake the screen when mobile phone is asleep.
Home button	• Press at any time to display the Home screen. • A long press of the Home button will display the Google icon. Touch the icon on the display to launch Google search or Google Now.
Recent Apps button	Press to list the recent applications used.
Back button	• Press to display the previous screen you were working in. • Use to close the on-screen keyboard.
Volume up/down key	• Volume – Press the **Volume up** key to increase the volume, or the **Volume down** key to decrease the volume. • Screenshot – Press both **Power** and **Volume down** keys simultaneously. • When in the camera app, press the **Volume up/down** key to instantly take your pictures.

Getting started

Installing nano SIM card

1. Place your phone on a flat surface with the display facing down. Then open the side door.

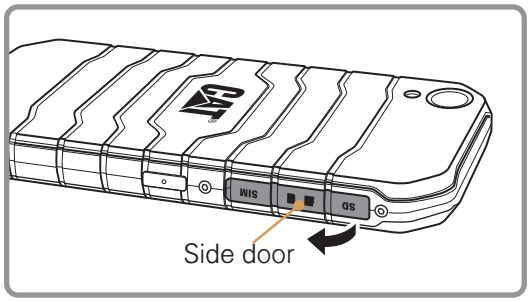

2. Use your fingertip to pull out the SIM tray.

3. Put the nano SIM card in the SIM tray as indicated on the tray guide.

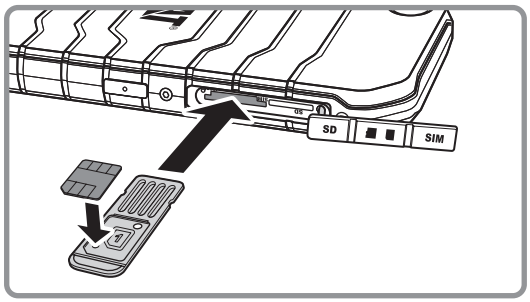

4. Insert the SIM tray into the SIM card slot.

Note:

- Put the nano SIM card in the SIM tray, with the card gold contacts facing up, push the tray all the way until it is fully seated in the slot.
- To remove the nano SIM card, use your fingertip to pull the tray out. Then remove the nano SIM card.

Installing a memory card

1. Place your phone on a flat surface with the display facing down. Then open the side door.

2. Insert a microSD card into the memory card slot with gold contacts facing up.

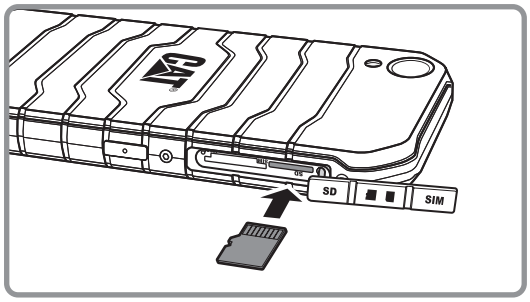

Note:

- Insert the microSD card with the gold contacts facing up, push the memory card all the way until you hear a locking sound.
- To remove the microSD card, press against the edge of the memory card and release it.
- Do not force the microSD card as this could damage the memory card or slot.

Charging the battery

The S41 has an embedded battery, to charge the battery:

1. Connect the USB cable that came with your mobile phone to the charger.

   Note:

   Use only Cat® approved chargers and cables. Unapproved equipment may cause damage to the device or cause batteries to explode.

2. Open the USB port cover. Connect the USB cable to the USB port of your phone.

   Note:

   Be careful not to use excessive force when plugging the USB cable.

   Be aware of the correct orientation of the plug. Damage can be caused by attempting to insert the connector incorrectly, this is not covered by the warranty.

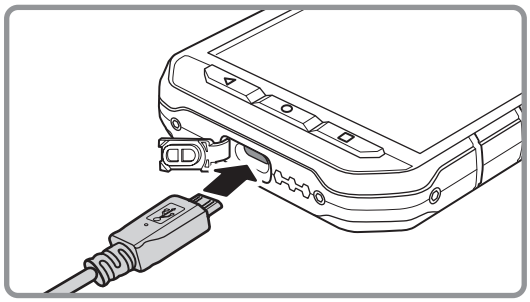

3. Connect the USB to the appropriate AC mains plug and connect safely to the mains power supply.
4. When charging is complete, remove the connector from the device and then remove the wall charger.

Important information about the battery

If the battery is discharged, you may not be able to power on your mobile phone immediately after you begin charging the battery. Allow the battery to charge for a few minutes with the phone powered off before attempting to power on the phone. The on-screen charge animation may not be displayed during this period.

The time required to charge the battery depends on the environmental temperature and the age of the battery.

When the battery power level is low, the phone plays an alert and displays a prompt. When the battery power is almost exhausted, your phone will power off automatically.

Powering on your mobile phone

Powering on your mobile phone

Press the **Power** key (⏻).
The first time you power on your phone, you will see a Welcome screen. Select your preferred language and touch **GET STARTED** to continue with the set up process.

Note:

If personal identification number (PIN) protection is enabled on your SIM Card, you will be asked to enter your PIN before the Welcome screen. A Wi-Fi or Data connection is needed to complete the set up process.

You will now be prompted to sign in with your existing Google account, or set up a new account and complete the set up process.

Note:
You can skip the account set up process to complete at another time. A Google account is required to use some of the Google services on offer through your device.

Powering off your mobile phone

1. Press and hold the **Power** key to open the Phone options menu.

2. Touch **Power off**.

Touchscreen

Touchscreen actions

Touch: Touch using your fingertip to select an item, confirm a selection, or start an application.

Touch and hold: Touch an item with your fingertip and continue to press down until your mobile phone responds. For example, to open the options menu for the active screen, touch the screen and hold down until the menu appears.

Swipe: Move your finger across the screen either vertically or horizontally. For example, swipe left or right to switch between pictures.

Drag: Touch and hold the desired item with your finger. Drag the item to any part of the screen. You can drag an icon to move or delete it.

Home screen

After you sign in, or when you power on the phone, the Home Screen opens. The Home Screen is your starting point to access all the features on your phone. This displays application icons, widgets, shortcuts and other features. You can customize the Home Screen with different wallpaper and display the items you want.

The Home Screen has the Launcher icon (⠿). Touch this to view and launch installed applications (apps).

Note:
A long press on an empty space on the Home Screen will launch the shortcut to WALLPAPERS, WIDGETS, and SETTINGS.

Locking and unlocking the screen

Locking the screen

When your mobile phone is on, press the **Power** key to lock the screen. When the screen is locked, you can still receive messages and calls.

If you leave your mobile phone undisturbed for a while, the screen will lock automatically.

Unlocking the screen

Press the **Power** key to wake up the screen. Then drag the lock icon ( ) upwards to unlock the screen. Enter pattern or PIN code if required.

To use the Camera function directly from the locked screen, drag the camera icon ( ) upwards to launch the Camera App.

To use the Google Voice Search function directly from the locked screen, drag the voice search icon ( ) upwards to launch the Google Voice Search App.

Note:

- You can also wake up the screen by double tapping the screen or pressing the **Home** button twice. For details, refer to "Using the double tap wake function" on page 31.
- If you have set up a screen lock, you will be prompted to unlock the screen. For details, refer to "Protecting your mobile phone with a screen lock" on page 33.

Display

Display layout

Notifications and status information

The Status bar appears at the top of every screen. This displays notification icons, such as missed call or received messages (on the left) and phone status icons, such as battery status (on the right), along with the current time.

Notification icons

Status icons

Status icons

4G	Connected to 4G mobile network		No signal
LTE	Connected to LTE mobile network		Vibrate mode
3G	Connected to 3G mobile network		Location is found
G	Connected to GPRS mobile network		Battery is full
E	Connected to EDGE mobile network		Battery is charging
H	Connected to HSDPA mobile network		FM Radio is turned on
H+	Connected to HSPA+ mobile network		Airplane mode
R	Roaming		Connected to a Wi-Fi network
	Mobile network signal strength		Connected to a Bluetooth device

Notification icons

	New email message		Missed call
	New text message		Speakerphone is activated
31	Upcoming event		Phone microphone is muted
	Alarm is set		Downloading data
	Data is syncing		Headphones are connected
	Problem with sign-in or sync		A screenshot is captured

Notification panel

Your mobile phone will notify you when you receive a new message or there is an incoming event. The notification panel also informs you about alarms and settings. Open the notification panel to see the wireless network operator or to view a message, reminder, or event notification.

Opening the notification panel

1. When a new notification icon appears on the notification bar, touch the notification bar, and then drag down to open the notification panel.
2. Touch a notification to open the related application.

Closing the notification panel

To directly close a notification (without viewing), simply touch and hold the notification and drag it to the left/right of the screen.

To close the notification panel, slide the bottom of the panel upwards to close the notifications panel.

Shortcut icons

Adding a new screen item

1. From the Home screen, touch to display all the applications.
2. To add an item, drag the application icon to a specific Home screen.

Moving a screen item

1. Touch and hold an application icon on the Home screen until the icon enlarges.
2. Without lifting your finger, drag the icon to the desired position on the screen, and then release it.

Note:
There must be enough space for the icon to fit on the current Home screen panel.

Removing a screen item

1. Touch and hold an application icon on the Home screen until the icon enlarges.
2. Without lifting your finger, drag the item to **Remove**. Then release your finger to remove it from the Home screen.
3. You can also uninstall applications by following steps 1 and 2 and dragging the application to the **Uninstall** at the top of the screen.

Widgets

A widget lets you preview or use an application. You can place widgets on your Home screen as icons or preview windows. Several widgets are installed on your phone by default. More widgets can be downloaded on Google Play.

Adding a widget

1. From the Home screen, touch and hold the Home screen.
2. Touch **WIDGETS** to display the available widgets.
3. To add an item, drag your desired widget to a specific Home screen.

Removing a widget

1. Touch and hold the widget icon on the Home screen until the icon enlarges.
2. Without lifting your finger, drag the item to **Remove**. Then release your finger to remove it from the Home screen.

Folders

Creating a folder

Drag the application icon or shortcut and drop it on top of other applications.

Renaming a folder

1. Touch a folder to open it.
2. On the title bar of the folder, enter the new folder name.
3. When complete, press the **Back** button.

Wallpapers

Changing the wallpaper

1. From the Home screen, touch and hold the Home screen.
2. Touch **WALLPAPERS**.
3. Scroll through the available options to set a wallpaper of your choice.
4. Touch **Set wallpaper** > **Home screen** to set the desired image as the Home screen wallpaper.

Transferring media to and from your mobile phone

Transfer all your favourite music and pictures between your mobile phone and PC in Media Device MTP mode.

1. Connect your mobile phone to your PC with the USB cable.
2. Drag down to open the notification panel and the USB connection options appears. Then touch **Transfer files** to activate the MTP mode.
3. Your phone should be displayed as a removable device displaying the phone's Internal storage and if a memory card is inserted, microSD card will also be visible. Copy the desired files to your phone.

Note:
If using a MAC you will need to download drivers from: http://www.android.com/filetransfer/

Using the Airplane mode

Some locations may require you to turn off your phone's wireless connections. Rather than powering off your phone, you can set it to **Airplane mode**.

1. Press and hold the **Power** key.
2. Touch **Airplane mode** in the options menu.

Or using the **Settings** application, access the **More** menu and slide the **Airplane mode** switch to the right ( ) to enable the function.
From the home screen pulling down the notification panel also gives access to Airplane mode.

Phone

There are several ways to place a phone call. You can dial a number, select a number in your contacts list, on a Web page, or from a document that contains a phone number. When you are on a call, you can either answer incoming calls or send them to your voicemail box. You can also set up conference calls with several participants.

Note:
Contact your network operator to learn whether your subscription supports conference calls and how many participants you can add.

Making a call

To make a call, you can use the Phone application, or select a number from **Contacts** or Call Log.

When you are on a call, you can press the **Home** button to return to the Home screen and use other functions. To return to the calling screen, drag the notification bar down and touch Current call.

Making a call with the dialler

1. From the Home screen, touch . Then touch to display the dialler.
2. Touch the appropriate numeric keys to enter the phone number.

   Tip: Your mobile phone supports the SmartDial function, that is, when you touch numbers on the dialler, the phone automatically searches among your contacts and lists the matching results based on the accuracy. Close the keypad to view more possible matches.
3. After entering the number, or selecting the contact, touch .

Making a call from contacts

1. From the Home screen, touch > **Contacts** ( ) to display the contact list. If you are already within the dialler, touch the tab to display the contact list.
2. In the list, touch the contact you want to call.
3. Touch the phone number to call the contact.

Making a call from call log

1. Touch > **Phone** ( ) > tab. You will see the list of latest calls. If you cannot find the desired contact, touch > **Call History** to display all call history.
2. Touch the contact in the list and touch to make the call.

Answering and rejecting a call

When you receive a phone call, the incoming call screen opens with the caller ID and any additional information about the caller that you have entered in **Contacts**.

- To answer a call, touch and drag it to the right ( ).
- To reject the call, touch and drag it to the left ( ).
- To reject and send a message directly to the caller, touch and drag it to upwards ( ) and select one of the available template message options or touch **Write your own...** to compose your message.

Note:

When you touch , it disappears from the screen.

Ending a call

During a call, touch to hang up.

Other operations during a call

Making a conference call

If you receive a new call while you are already on a call, you can connect the second call to the call you are on. This feature is known as conference calling. You can also set up a conference call with multiple callers.

Note:
Contact your network operator to learn whether your subscription supports conference calls and how many participants you can add.

1. To initiate a conference call, dial the number of the first person to be on the call and touch to make the call.
2. While you are on that call, touch > **Add call** and enter the phone number of the person you want to join the conversation.
3. Touch , or select someone from your Call Log or **Contacts**. The first call is automatically placed on hold.
4. Once the additional call has been connected, touch > **Merge calls**.
5. To add more people, touch and repeat steps 2 to 4.
6. To end the conference call and disconnect everyone, touch .

Switching Between Calls

If you receive a new call while you are already on a call, you can switch between the two calls.

1. While you are on two calls, touch on the lower left corner of the display the contact's name or phone number.
2. The current call is placed on hold and you are connected to the other call.

Contacts

The Contacts application enables you to save and manage information such as phone numbers and addresses of your contacts. After you save the contact information on your mobile phone, this gives you easy access to people with whom you want to communicate.

Opening the contacts application

If you have a new mobile phone and have not yet added any contacts, Contacts displays a message with hints on how to start adding contacts to your mobile phone.

To open the application, do one of the following:

- Touch and then **Contacts** ( ). Touch the **ALL CONTACTS** tab to display the contact list.
- Touch on the Home screen, then touch the tab to display the contact list.

All of your contacts are displayed alphabetically in a scrolling list.

Copying contacts

You can copy contacts saved in your google accounts or from the SIM card, internal storage, or memory card.

1. In the contacts list, touch > **Import/export**.

2. Do one of the following:

- To import contacts saved in your google accounts:

  Select your account and touch **NEXT.** Specify where to import the contacts and touch **NEXT**. Then select the desired contact(s) and touch **OK**.
- To import contacts from the SIM card:

  Touch **USIM**. Specify where to import the contacts and touch **NEXT**. Then select the desired contact(s) and touch **OK**.
- To import contacts from the internal storage or memory card:

  Touch **Internal shared storage** or **SD card**. Specify where to import the contacts and touch **NEXT**. If there is more than one vCard file, you will have options either to import one vCard file, multiple vCard files, or all vCard files.

  Note:

  If there is more than one vCard file stored in the internal storage or memory card, you will have options either to import one vCard file, multiple vCard files, or all vCard files.

Backing up contacts

You can copy contacts to the SIM card, internal storage, or memory card.

1. In the contacts list, touch > **Import/export**.

2. Do one of the following:

- To export contacts to the SIM card:

  Select your account or touch **Phone contact**. Touch **NEXT** > **USIM.** Then select the desired contact(s) and touch **OK**.
- To export contacts to the internal storage or memory card:

  Select your account or touch **Phone contact**. Touch **Internal shared storage** or **SD card** > **NEXT.** Then select the desired contact(s) and touch **OK**. A confirmation message appears, touch **OK** to confirm the selection.

Adding a contact

1. In the contacts list, touch to add a new contact.
2. Specify where to store the contact. Then enter the contact's name, and then add any detailed information such as phone number or address.
3. When you are finished, touch ✓ to save the contact information.

Adding a contact to your favourites

1. Touch the contact you want to add to Favourites.
2. Touch ☆ beside the name and the icon turns white (★).

Searching for a contact

1. In the contacts list, touch to search for a contact.
2. Enter the name of the contact for which you are searching. As you type, contacts with matching names appear below the search box.

Editing a contact

You can always make changes to the information you have stored for a contact.

1. In the contacts list, touch the contact whose details you want to edit.
2. Touch .
3. Make the desired changes to the contact information, and then touch ✓. To cancel all changes you have made to the contact information, press the **Back** button.

Communicating with your contacts

From the All Contacts or Favourites tab, you can quickly call or send a text (SMS) or multimedia message (MMS) to a contact's default phone number. You can also open details to view a list of all the ways you can communicate with that contact. This section describes how to communicate with a contact when you view your contacts list.

Communicating with a contact

1. In the contacts list, touch the contact that you want to communicate.
2. In the contact's details screen, you can do one of the following:
   - Touch the phone number to make a call.
   - Touch to send message.

Deleting a contact

1. In the contacts list, touch the contact that you want to delete.
2. Touch ⋮ > **Delete**.
3. Touch **DELETE** to confirm that you want to delete the contact.

Using the on-screen keyboard

Displaying the keyboard panel

To enter text, use the on-screen keyboard. Some applications open the keyboard automatically. In others, touch a text field to open the keyboard.
To open the keyboard, touch the space where you want to write the text. Press the **Back** button to hide the keyboard.

Using the landscape keyboard

If you find the keyboard inconvenient or difficult to use, turn your mobile phone sideways. The screen will display the keyboard in landscape orientation, providing you with a wider keyboard layout.

Customizing keyboard settings

1. Touch > **Settings** ( ) > **Languages & input**.

2. Do any of the following:

   - Touch **Virtual keyboard** to configure the keyboard settings.
   - Touch **Physical keyboard** to let the virtual keyboard appears on the screen and display available shortcuts.

Wi-Fi®

To use Wi-Fi on your mobile phone, you need to have access to wireless access points (hotspots). Obstacles that block the Wi-Fi signal will reduce its strength.

Turning on Wi-Fi and connecting to a wireless network

1. Touch > **Settings** ( ).

2. In **Wireless & networks**, touch **Wi-Fi** and slide the switch to the right ( ) to enable the function.

3. A list of detected Wi-Fi networks will be displayed. Choose Wi-Fi network to connect.

4. If you select an open network, you will be automatically connected to the network. If you select a network that is secured and connect to it for the first time, enter the password, and then touch **CONNECT**.

   Note:
   If you connect to a secured wireless network that you have already used, you will not be prompted to enter the password again unless you reset your mobile phone to its default settings or the Wi-Fi password was changed.

   Tip: On the Wi-Fi settings screen, touch **Add network** to add a new Wi-Fi network.

SMS and MMS

Opening messaging

To open the application, do one of the following:

- Touch on the Home screen.
- Touch > **Messaging** ( ).

Creating and sending a text message

The window opens, where you can create a new message or open an ongoing message thread.

1. Touch to start a new text or multimedia message or touch an existing message thread to open it.
2. Enter a phone number in the **Type name or number** field. As you enter the phone number, matching contacts appear. You can touch a suggested recipient or continue entering the phone number.
3. Touch the text box to start entering your message.

   If you press the **Back** button while composing a message, it is saved as a draft in your message list. Touch the message to resume composing it.
4. Once you are done, touch .

Note:
Responses appear in the window. As you view and send additional messages, a message thread is created.

Creating and sending a multimedia message

1. On the messaging screen, touch .
2. Enter a phone number in the **Type name or number** field or touch to add a phone number from the **CONTACTS** list.
3. Touch the text box to start entering your message.
4. Touch > **Add subject** to add the message subject.
5. Enter a subject.

   Your mobile phone is now in multimedia message mode.
6. Touch and select the type of media file to attach to the message.
7. Once you are done, touch .

Opening and replying to a message

1. In the message list, touch a text or multimedia message thread to open it.

2. Touch the text box to compose your message.

3. Touch ➢.

Customizing the message settings

In the message list, touch ⋮ > **Settings** to customize the message settings. Choose from:

- SMS Enabled: Specify the default SMS application.
- Text Message(SMS): Configure the text message settings.
  - Request delivery report: Check the check box to request a delivery report for each message you sent.
  - Manage SIM card messages: Manage the SIM card messages.
  - Edit quick text: Edit the message template.
  - SMS Service Center: Specify the phone number of the SMS Service Center.
  - SMS storage location: Specify where to store the text message.
- Multimedia Message(MMS): Configure the multimedia message settings.
  - Group messaging: Check the check box to use MMS to send a single message when there are multiple recipients.
  - Request delivery report: Check the check box to request a delivery report for each message you sent.
  - Request read reports: Check the check box to request a read report for each message you sent.
  - Send read reports: Check the check box to send a read report if requested bt the MMS sender.
  - Auto-retrieve: Check the check box to automatically retrieve messages.
  - Roaming auto-retrieve: Check the check box to automatically retrieve messages while roaming.
  - Size Limit: Set the MMS maximum limit per conversation.
- Notifications: Configure the notification settings.
  - Message notifications: Check the check box to display a new message notification on the status bar.
  - Mute: Temporarily block the SMS or MMS.
  - Sound: Set a ringtone for new messages.
  - Vibrate: Check the check box to let the device to vibrate for new messages.
  - Popup notification: Check the check box to display popup for push notifications.
- General: Configure the general message settings.
  - Message font size: Specify the message font size.
  - Delete old messages: Check the check box to delete the old messages as limits are reached.
  - Text message limit: Set the text message maximum limit per conversation.
  - Multimedio message limit: Set the MMS maximum limit per conversation.
  - Cell broadcast: Set the MMS maximum limit per conversation.
  - Enable WAP PUSH: Check the check box to enable to receive service message.

Bluetooth®

Your mobile phone has Bluetooth, which allows you to create a wireless connection with other Bluetooth devices so you can share files with your friends, talk hands-free with a Bluetooth headset, or even transfer photos on your phone to your PC.

If you are using Bluetooth, remember to stay within 10 meters of other Bluetooth devices. Be aware that obstacles like walls or other electronic equipment may interfere with your Bluetooth connection.

Turning on Bluetooth

1. Touch > **Settings** ( ).

2. In **Wireless & networks**, touch **Bluetooth** and slide the switch to the right ( ) to enable the function.
   When Bluetooth is turned on, the Bluetooth icon appears in the notification bar.

Pairing and connecting a Bluetooth device

Bluetooth lets you do the following:

- Use a hands-free Bluetooth device.
- Use a mono or stereo Bluetooth headset.
- Control what plays through the Bluetooth headset remotely.

Before you use Bluetooth, you need to pair your mobile phone with another Bluetooth device as follows:

1. Ensure that the Bluetooth function on your mobile phone is enabled.

2. Your mobile phone will then search for Bluetooth devices in range (or touch > **Refresh**).

3. Touch the device you want to pair with your mobile phone.

4. Follow the on-screen instructions to complete the connection.

Note:
Once a partnership has been created, connecting to that Bluetooth device again will no longer require entering the password.

Sending files via Bluetooth

With Bluetooth, you can share pictures, videos, or music files with your family and friends.

To send files via Bluetooth, do as follows:

1. Touch the file to be sent.

2. Touch > **Bluetooth**, and then select a paired device.

Disconnecting or unpairing a Bluetooth device

1. Touch > **Settings** ( ).
2. In **Wireless & networks**, touch **Bluetooth**.
3. On the connected device option, touch and then touch **FORGET** to confirm the disconnection.

Taking photos and recording videos

The camera is a combination of camera and camcorder that you can use to shoot and share pictures and videos.

Opening your camera

To open the application, do one of the following:

- Touch on the Home screen.
- Touch > **Camera** ( ).

Press the **Back** or **Home** button to close the camera.

Taking a photo

1. Touch > **Camera** ( ).
   - By default, it is in Camera mode. Otherwise, slide the screen to the right until the Camera shutter icon ( ) appears on the bottom of the screen.

     Note:
     Touch to switch between front and 13MP camera.
   - If you want to include yourself in the photo, touch and select **PIP** to activate both cameras function simultaneously.
2. Compose your photo within the photo capture screen.
   - Touch the screen to focus the specific area on the screen.
   - Pinch to zoom in/out on the subject.
   - Touch to change the camera settings.
   - Touch to apply a background effect.
3. Touch to take your photo.

Note:
When in the Camera app, you can press the **Volume up** and **Volume down** keys to take your photos too.

Viewing your photos

To view your photos, you can do one of the following:

- When in the Camera view, touch the thumbnail of the latest captured photo next to .

  Note:

  To go back to Camera view, press the **Back** button or swipe to the right until the capture screen appears again.

- Touch > **Photos** ( ) to view all photos and videos.

Edit and share your photos

As you browse through your photos, the following options become available:

- Edit: Touch and edit your photos with the wide range of options available.
- Share: Touch and share your photos through various applications available on your device.
- Delete: Touch to delete photos no longer required.
- View Information: Touch to view the photo information.

Shooting a video

1. Touch > **Camera** ( ).
2. Slide the screen to the left until the Video shutter icon ( ) appears on the bottom of the screen.

   Note:

   - Touch to switch between front and 13MP camera.
   - Touch to apply a background effect.

3. Touch to start recording.
4. While recording, do one of the following:
   - Pinch to zoom in/out on the subject.
   - Touch to pause the recording. To resume, touch .
   - Touch to take a photo.
5. Touch to stop shooting.

Viewing your videos

After recording a video, touch the thumbnail of the latest recorded video next to . Touch to play the video.

Taking a panoramic photo

1. Touch > **Camera** ( ).
2. Touch the orange icon (or) on the top left of the screen and select **Panorama** to switch to the Panorama mode.
3. Touch to start taking the shot.
4. Determine the direction. Then slowly move the device towards the desired direction.
5. When the shooting guide reaches the end point, the shooting ends. To manually stop taking the shot, touch .

Tip: To cancel the shooting, simply touch .

Using photos

Your **Photos** application can automatically search for pictures and videos saved to your or memory card. Select the album/folder and play as a slideshow or select items to share with other applications.

Opening photos

Touch > **Photos** ( ) to open the application. The Photos application categorizes your pictures and videos by storage location and stores these files in folders. Touch a folder to view the pictures or videos inside.

Viewing a photo

1. In Photos, touch the folder that contains the pictures you want to view.
2. Touch the picture to view it in full-screen mode. When viewing a picture in full-screen mode, flick the picture left or right to view the previous or next picture.
3. To zoom in on the image, move your two fingers apart from each other at the location of the screen where you want to zoom in. In zoom mode, swipe your finger up or down and left or right.

Tip: The picture viewer supports the automatic rotation function. When you rotate your mobile phone, the picture adjusts itself to the rotation.

Cropping a picture in photos

1. When viewing a picture, touch > .
2. Touch **Crop** and use the cropping tool to select the portion of the picture to crop.
   - Drag from the inside of the cropping tool to move it.
   - Drag an edge or a corner of the cropping tool to resize the image.
3. Touch **DONE** > **SAVE** to save the cropped picture.
   - To discard the changes, touch > **DISCARD**.

Enjoying music

You can transfer music files from your PC to your microSD card or to the phone memory so you can listen to music on your mobile phone.

Copying music to the microSD card

1. Connect the phone to your computer with a USB cable and mount the microSD card.
2. On the PC, navigate to the USB drive and open it.
3. Create a folder in the root directory of the microSD card (for example, Music).
4. Copy the music from your computer to the folder you have created.
5. After copying music, unmount or eject the drive as required by your PC's operating system to safely remove the mobile phone from the PC.

Opening Google Play music

To display the media library, touch ⊞ > **Google Play Music** ( ) > touch the music category selection box at the top left of the screen ☰ > **Music library**. It contains five tabs: PLAYLISTS, ARTISTS, ALBUMS, SONGS, and GENRES.

Playing music

1. Touch a category on the music library screen.
2. Touch the song you want to play.

Tip: When you are listening to music, press the **Back** button to use another application. Your music continues to play. To return to the music controls, open the notification panel and then touch the song.

Adding music to a playlist

1. Touch a category on the music library screen.
2. Touch ⋮ next to the song that you want to add to a playlist. Then touch **Add to playlist** in the options menu.
3. Select a playlist or touch **NEW PLAYLIST** to add the song to an existing playlist.

Playing a playlist

1. In the music library screen, touch playlists.
2. Touch the playlist you want to access.
3. Touch the song you want to play.

Listening to FM radio

FM Radio lets you listen to FM radio stations on your mobile phone. Connect your headset first to the audio jack of your phone before opening the application.

Touch > **FM Radio** ( ) to launch the application.

Tuning the FM radio

Choose from the following options:

- To start listening to FM radio station, touch .
- To select the radio station to listen to, touch or .
- To manually tune to a frequency, touch < or > to select the radio station.
- To add the current radio station to the Favourite list, touch ☆. The current radio station will appear on the **Favourites** list.
- To mute the FM, touch . Then touch to resume.
- To enable the speaker, touch > **Speaker**.
- To scan for all available channels, touch > > **Refresh**.
- To turn off the radio, simply disconnect your headset.

Recording the FM radio

To record the radio, do the following:

- To start recording, touch > **Start recording**.
- To stop recording, touch **STOP RECORDING**. Then enter the file name and touch **SAVE** to save recorded file.

Google Services

You must sign in to a Google account to use Gmail, Google Calendar, and other Google Apps. To download applications on Google Play, you will also be prompted to sign in to your Google account.

Creating a Google account

If you did not choose to create a Google account during set up, you can create one:

1. Touch > **Settings** ( ).

2. Touch **Accounts** > **Add account**.

3. Touch **Google** to create a Google account and then follow the onscreen instructions.

Using Gmail

When you first set up your phone, you may have configured it to use an existing Gmail account or create a new account. The first time you open the Gmail application on your phone, your Inbox will contain the messages from your Gmail account on the web.

Opening Gmail

Touch > **Gmail** ( ). The Inbox mail list appears. Any emails you decide to keep on your mobile phone will go to your Inbox folder.

Switching between accounts

To switch to another email account, touch the account selection box at the top left of the screen, then touch the account that you want to view.

Creating and sending an Email

1. On the Inbox screen, touch .

2. Enter the message recipient's email address in the **To** field.
   - If you are sending the email to several recipients, separate the email addresses with commas.
   - If you want to send CC or BCC other recipients, touch to display the **Add Cc/Bcc** fields.

3. Enter the email subject and compose your message.

   If you want to add a picture attachment, touch to select the picture you want to attach.

4. After composing your email, touch .

Replying or forwarding Email

1. On the Inbox screen, touch the email that you want to reply to or forward.
2. Touch Reply( ), Reply all (> **Reply all**), or Forward (> **Forward**).
3. Do one of the following:
   - If you select Reply or Reply all, enter your message.
   - If you select Forward, specify the message recipients and add any additional text you want to include with the forwarded message.
4. Touch .

Searching Email

1. On the Inbox screen, touch .
2. Enter the search keywords in the box, and then touch .

Customizing your Gmail settings

1. On the folder category screen, touch > **Settings** to customize the message settings.
2. Choose **General settings** or an email account.
3. Touch an option and change the necessary settings.

Google Maps

Google Maps lets you find your current location, view real-time traffic conditions (depending on availability in your location), and get detailed directions to various destinations on a satellite, traffic, or other kind of map.

Enabling location

Before you open Maps to find your location or search for places of interest, you must enable **Location** and set **Location mode**.

1. Touch > **Settings** ( ).
2. Touch **Location**.
3. Slide the **Location** switch to the right ( ) to enable the function.
4. Touch **Mode** and choose the relevant option.

   Note:
   To use the navigation feature, the **Mode** function will have to be set to **High accuracy**.

Opening Maps

Touch > **Maps** ( ) to open the application.

Note:
You can also access the application by opening the **Google** folder and select **Maps** ( ).

Searching for places of interest

1. While viewing a map, enter the place you want to search for, in the search box at the top of the display, and then touch .

   Note:
   You can also select one option from the suggestions list.
2. Your search results will then be displayed. Touch the marker ( ) and it displays the location name.
3. Touch to view your current location on the map.

Getting directions

1. While viewing a map, touch **DIRECTIONS**.
2. Touch the icon for car, public transit, or walking directions.
3. The application displays automatically the shortest distance from your current location to the destination location.

   Note:
   If you want to enter manually the current location and/or the destination location, touch Your location or the destination location and enter the relevant information.
4. Touch **START**.

Note:
Touch ⋮ to switch the current and destination locations, add stop, share the route directions, view information on air traffic, satellite, and/or terrain image of the map, and configure the route options.

Using Google Play Store

Play Store provides direct access to applications and games, which you can download and install on your phone.

Opening Google Play Store

To open the application, do one of the following:

- Touch on the Home screen.
- Touch > **Play Store** ( ).

Searching for applications

There are a few different ways to find applications on the **Play Store** home screen, including:

- List of applications by category: Touch the desired category and scroll down to view more.
- Search function: Enter the search keywords in the box, and then touch .

To view the installed applications, touch > **My apps & games**.

Installing an application

Note:
If you want to install an application from a source other than Google Play store, touch **Settings** ( ) > **Security**, and slide the **Unknown sources** switch to the right ( ).

1. Touch > **Play Store** ( ).

2. Touch a category, and then touch the item you want to download.

   Here you can read more about the application, including overall rating, and user comments. If you scroll down to the Developer Info section, you can see other applications from the same developer, or link to the developer's website.

3. Touch **INSTALL** to install the application.

Note:
To check the progress of a download, open the notification panel. The installation duration will depend on the size of the application and your data connection speed.

Uninstalling an application

1. On the **Play Store** home screen, touch > **My apps & games**.

2. Touch the application you want to uninstall, and then touch **UNINSTALL**.

3. When prompted, touch **OK** to remove the application from your mobile phone.

Note:
Applications can also be managed by touching **Settings** ( ) > **Apps** or uninstalled directly by holding your finger on the app and then dragging to the **Uninstall** option at top of the screen.

Synchronizing information

Some applications (for example, Gmail) on your mobile phone give you access to the same personal information that you can add, view, and edit on your computer. If you add, change, or delete your information in any of these applications on the web, the updated information also appears on your mobile phone.

This is made possible through over-the-air data synchronization. The process occurs in the background and does not interfere with the use of your mobile phone. When your phone is synchronizing, a data synchronization icon will be shown in the notification bar.

Managing your accounts

You can synchronize contacts, email, and other information on your mobile phone with multiple Google accounts or other accounts, depending on the applications installed on your mobile phone.

For example, you can start by adding your personal Google account, so your personal email, contacts, and calendar are always available. You could then add a work account, so your work-related emails, contacts and calendar entries are also accessible.

Adding an account

1. Touch > **Settings** ( ).
2. Touch **Accounts** > **Add account**. The screen displays your current synchronization settings and a list of your current accounts.

   Note:
   In some cases, you may need to obtain account details from network administrator support. For example, you may need to know the account's domain or server address.
3. Touch the account type to add.
4. Follow the on-screen instructions to enter the required and optional information about the account. Most accounts require a username and password, but the details depend on the kind of account and the configuration of the service to which you are connecting.
5. Configure the account. Depending on the kind of account, you may be asked to configure what kind of data you want to sync to the mobile phone, to name the account, and for other details. When you are finished, the account is added to the list in the **Accounts** settings screen.

Removing an account

You can remove an account and all information associated with it from your mobile phone, including email, contacts, settings, and so on. You cannot, however, remove some accounts, such as the first account you signed into on the mobile phone. If you attempt to remove certain accounts, be aware that all personal information associated with it will be deleted.

1. On the **Accounts** settings screen, touch the account type.
2. Touch the account to delete.
3. Touch ⋮ > **Remove account**.
4. Touch **REMOVE ACCOUNT** to confirm that you want to remove the account.

Customizing your account synchronization

You can configure background data use and synchronization options for all the applications on your phone. You can also configure what kind of data you synchronize for each account. Some applications, such as Contacts and Gmail, can synchronize data from multiple applications. Others, such as Calendar, synchronize data only from the first Google account you signed into on your phone, or from an account associated specifically with that application. For some accounts, synchronizing is two-directional; changes that you make to the information on your mobile phone are made to the copy of that information on the web. Some accounts support only one-way synchronization; the information on your mobile phone is read-only.

Changing an account's synchronization settings

1. On the **Accounts** settings screen, touch the account type.
2. Touch the account whose synchronization settings you want to change. The data and synchronization screen opens, displaying a list of the kinds of information the account can synchronize.
3. Enable the items you want to keep synced by sliding the respective data switch to the right ( ). To disable the data to automatically sync, slide the respective data switch to the left ( ).

Using other applications

Using the calendar

Use **Calendar** to create and manage events, meetings, and appointments. Depending on your synchronization settings, the calendar on your phone stays in synchronization with your calendar on the web.

Opening the calendar

Touch > **Calendar** ( ) to open the application. Touch to display various view and settings options.

Creating an event

1. On any calendar view, touch > **Event** to start adding an event.
2. Enter the event title, location, or the contacts.
   - If there is a time frame for the event, touch the beginning and end date and time lines to select the respective dates and duration of the event.
   - If it is a special occasion such as a birthday or a day-long event, slide the **All-day** switch to the right ( ) to enable the function.
3. Select the appropriate time zone.
4. Specify the repetition of the event.
5. Set the time of your event reminder, invite people, set colour, and add any notes or attachments.
6. After all settings are complete, touch **SAVE**.

Setting an event reminder

1. On any calendar view, touch an event to view its details or event summary.
2. Touch to start editing the event.
3. Touch the reminder section ( ) to set the reminder time before the event when you want to be reminded. When the time comes, you will receive a notification about the event.

   Note:
   Touch **No notification** to delete the reminder for that event.

4. Touch **SAVE** to save the modifications.

Using the alarm

You can set a new alarm or modify an existing alarm.

Opening the alarm

Touch > **Clock** ( ) > to use your mobile phone alarm. Here you will see a list of current alarm details.

Adding an alarm

1. On the alarm list screen, touch to add an alarm.
2. To set the alarm, do the following:
   - Set the hour and minutes by navigating around the dial and touch **OK**.
   - To set repeat mode, check the **Repeat** check box. Touch one or more options.
   - To set the ringtone, touch and select an option.
   - To vibrate when the alarm sounds, touch the **Vibrate** check box.
   - To add an alarm label, touch **Label**. Enter the label, then touch **OK**.

Note:
By default, the alarm is automatically activated.

Calculator

The S41 is equipped with a calculator that has a standard and advanced mode.

Opening the calculator

Touch > **Calculator** ( ) to open the application.

Turn the phone in to landscape mode to access the advanced calculator mode. Ensure that Auto-rotate is enabled (see: Setting the display).

Managing your mobile phone

To configure your mobile phone, touch > **Settings** ( ).

Setting the date and time

When you first start the phone, you are asked if you want the time and date to update automatically using the time provided by the network.

Note:

When the time provided by the network is automatically used, you cannot set the date, time, and time zone.

To manually adjust the date and time settings, do the following:

1. On the Settings screen, touch **Date & time**.
2. Set the **Automatic date & time** setting to **Off** to disable the function.
3. Slide the **Automatic time zone** switch to the left ( ) to disable the function.
4. Touch **Set date**. On the set date screen, touch the desired date and touch **OK** when the configuration is complete.
5. Touch **Set time**. On the set time screen, touch the hour or minute field and navigate around the dial to set the time. Touch **OK** when the configuration is complete.
6. Touch **Select time zone**, and then select the desired time zone from the list. Scroll the list to view more time zones.
7. Enable or disable the **Use 24-hour format** function to switch between 24-hour format and 12-hour format.

Setting the display

Adjusting the screen brightness

1. On the Settings screen, touch **Display** > **Brightness level**.
2. Drag the slider left to make the screen darker, or right to make it brighter.
3. Once you lift your finger off the slider, this will save your setting automatically.

Note:

Slide the Adaptive Brightness switch to the right ( ) to enable the device to automatically adjust the brightness of the screen depending on the surrounding light.

Auto-rotate screen

Touch **When device is rotated** and set the setting to **Rotate the contents of the screen** to enable the display to rotate when you turn the phone between landscape and portrait.

Adjusting the time before the screen turns off

If your mobile phone is idle for a period of time, it will turn off the screen to save battery power. To set a longer or shorter idle time, do the following:

1. On the Settings screen, touch **Display** > **Sleep**.
2. Select the duration you want the screen to be illuminated.

Using the glove mode

Enable the Glove Mode to make the touchscreen respond more accurately when you are wearing gloves.

1. On the Settings screen, touch **Display** > **Glove Mode**.
2. Slide the **Glove Mode** switch to the right ( ) to enable the function.

Using the double tap wake function

When your phone is asleep, besides using the **Power** key, you can either press the **Home** button twice or double tap the screen to wake up the screen.

1. On the Settings screen, touch **Display** > **Home button** or **Double Tap Wake**.
2. Slide the switch to the right ( ) to enable the function.

Setting phone ringtone

Turning on silent mode

1. Press and hold the **Power** key.
2. Touch to enable the silent mode. Then all sounds except media and alarms are silenced.

Adjusting the ringtone volume

You can adjust the ringer volume when you are on the Home screen or any application screens (except during a call or when playing music or videos). Press the **Volume up/down** key to adjust the ringer volume to your desired level. You can also adjust the ringer volume on the settings screen.

1. On the Settings screen, touch **Sound**.
2. In **Ring volume**, drag the slider to adjust the volume level.

Changing the phone ringtone

1. On the Settings screen, touch **Sound**.
2. Touch **Phone ringtone**.
3. Select the ringtone you want to use. The ringtone plays when selected.
4. Touch **OK**.

Setting your phone to vibrate for incoming calls

On the Settings screen, touch **Sound**, and slide the **Also vibrate for calls** switch to the right ( ) to enable your phone to vibrate for incoming calls.

Note:
You can also enable this through the Volume down key.

Configuring the programmable key

You can assign the **Programmable** key to perform various functions when you press the button. See page 1.

1. On the Settings screen, touch **Programmable key**.

2. Select one of the available functions that you want to assign:

- Slide the **PTT mode** switch to the right ( ) to activate the walkie talkie function by pressing the **Programmable** key.
- Select the button pressing method (**Short press** or **Long press**). Then select the action from the list to assign to the **Programmable** key. Touch **OK** to confirm.
- Slide the **Underwater Mode** switch to the right ( ) to switch to the underwater mode by pressing the **Programmable** key.

  Note:
  In Underwater mode, all touch panel functions will be disabled and the incoming calls will not able to be answered.

Setting phone services

Turning on data roaming

1. On the Settings screen, touch **More** > **Cellular networks**.

2. Slide the **Data roaming** switch to the right ( ) to enable the data roaming function.

Note:
Accessing data services while roaming may incur considerable additional charges. Ask your network service provider about data roaming fees.

Disable data service

On the Settings screen, touch **Data usage** and slide the **Cellular data** switch to the left ( ) to disable the data service function.

Protecting your mobile phone

Enable your SIM card PIN

1. On the Settings screen, touch **Security** > **Set up SIM card lock**.
2. Select the SIM card where you want to apply the PIN lock feature.
3. Slide the **Lock SIM card** switch to the right ( ) to enable the function.
4. Enter the SIM card PIN, and then touch **OK**.

   To change the SIM card PIN at any time, touch **Change SIM PIN**.

Note:
You can dial emergency numbers any time from your mobile phone.

Protecting your mobile phone with a screen lock

To keep your data more secure, lock the screen and/or require a screen unlock pattern every time your mobile phone is turned on or wakes up from sleep mode.

1. On the Settings screen, touch **Screen lock** or touch **Security** > **Screen lock**.
2. Select the one of the available options.
   - Swipe: Swipe to lock icon to unlock the phone.
   - Pattern: Trace the correct unlock pattern on the screen to unlock the phone.
   - PIN: Enter a PIN number to unlock the phone.
   - Password: Enter a password to unlock the phone.
3. Follow the on-screen instructions for the chosen method to complete the settings.

Using NFC

NFC allows exchange of data between two NFC enabled devices, when both devices are either touching or no more than a few centimetre's apart.

Activating NFC function

1. On the Settings screen, touch **More**.
2. Slide the **NFC** switch to the right ( ) to enable the function.

   The **Android Beam** function will also automatically turn on.

Beaming content via NFC

1. Enable the NFC and Android Beam functions.
2. Open the content to be shared. You can share website content, YouTube videos, contacts and much more.
3. Place both devices' backs against each other, and then touch your screen. The application determines what gets beamed.

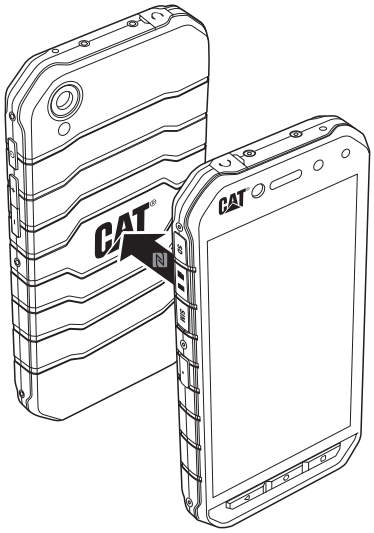

Managing applications

Viewing an installed Application

1. On the Settings screen, touch **Apps**.
2. In the applications list, do any of the following:
   - Touch ⚙ to configure apps settings.
   - Touch ⋮ > **Show system** to display system apps.
   - Touch ⋮ > **Reset app preferences** > **RESET APPS** to reset apps preferences to their default settings.
   - Touch an application to view its details directly.

Removing an installed Application

1. On the Settings screen, touch **Apps**.
2. Touch an application, and then touch **UNINSTALL** > **OK** to remove the application from your mobile phone.

Note:
Pre-installed applications cannot be deleted.

Resetting your mobile phone

Backing up my settings

You can back up your mobile phone's settings to Google servers, with your Google account. If you replace your mobile phone, the settings you have backed up are stored on the new mobile phone the first time you sign in with your Google account.

1. On the Settings screen, touch **Backup & reset**.
2. Touch **Back up my data**. Then slide the **Back up my data** switch to the right (🟢) to enable the function.

Restoring factory data

If you reset your phone to the settings that were configured at the factory, all of your personal data from internal phone storage, including information about your Google Account, any other accounts, your system and application settings, and any downloaded applications will be erased. Resetting the phone does not erase any system software updates you've downloaded or any files on your microSD card, such as music or photos.

1. On the Settings screen, touch **Backup & reset** > **Factory data reset**.

2. When prompted, touch **RESET PHONE**, and then touch **ERASE EVERYTHING**. The mobile phone resets the settings to the original factory settings, and then restarts.

Hardware reset of your device

This device has an internal battery and therefore the hardware cannot be reset by the removal of the battery. If you should need to reset the hardware, please follow the steps listed below. Please note that this action may be required if you do not see that your device is charging even after being connected to the charger from your wall outlet.

Press the **Volume up** and **Power** keys until the device powers down. After the device is reset, it will restart automatically.

Viewing E-label

To view the regulatory information on your mobile phone, do the following:

1. From the Home screen, touch > **Settings** ( ).

2. On the Settings screen, touch **About phone** > **Regulatory information**.

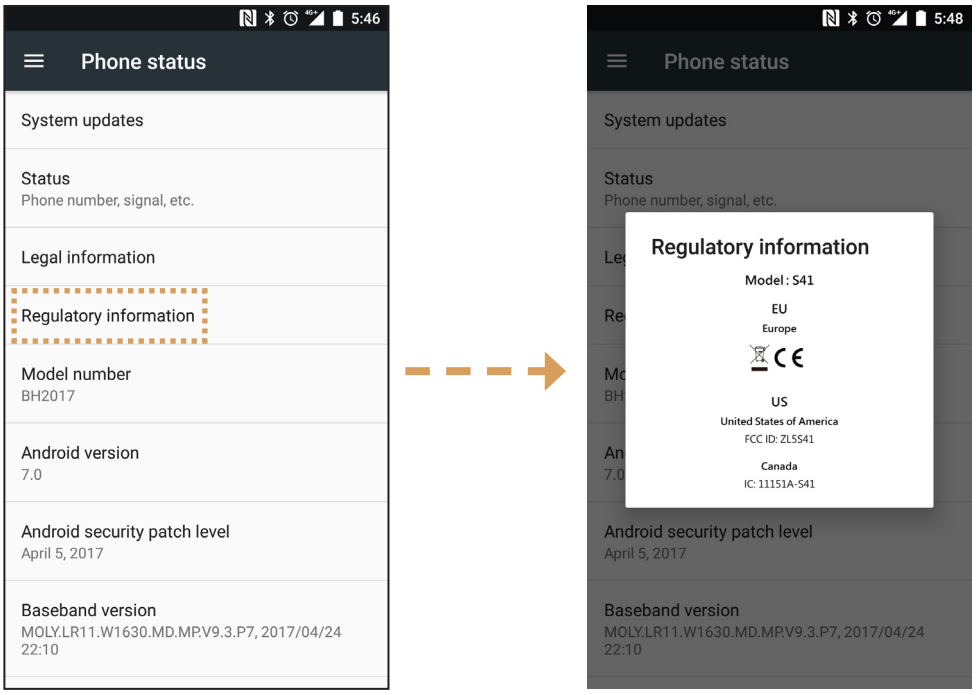

Appendix

Warnings and Precautions

This section contains important information pertaining to the operating instructions of your device. It also contains information about how to use the device safely. Read this information carefully before using your device.

Waterproof casing

USB and Headset jack covers must be securely in place, and the rear cover properly fitted and locked to ensure the device will meet this level of protection.

Electronic device

Power off your device if using the device is prohibited. Do not use the device when using the device causes danger or interference with electronic devices.

Medical device

Follow rules and regulations set forth by hospitals and health care facilities. Do not use your device when using the device is prohibited.

Pacemaker manufacturers recommend that a minimum distance of 15 cm be maintained between a device and a pacemaker to prevent potential interference with the pacemaker. If you are using a pacemaker, use the device on the opposite side of the pacemaker and do not carry the device in your front pocket.

Potentially explosive atmosphere

Power off your device in any area with a potentially explosive atmosphere, and comply with all signs and instructions. Areas that may have potentially explosive atmospheres include the areas where you would normally be advised to turn off your vehicle engine. Triggering of sparks in such areas could cause an explosion or a fire, resulting in bodily injuries or even deaths. Do not power on your device at refuelling points such as service stations. Comply with restrictions on the use of radio equipment in fuel depots, storage, and distribution areas, and chemical plants. In addition, adhere to restrictions in areas where blasting operations are in progress. Before using the device, watch out for areas that have potentially explosive atmospheres that are often, but not always, clearly marked. Such locations include areas below the deck on boats, chemical transfer or storage facilities, and areas where the air contains chemicals or particles such as grain, dust, or metal powders. Ask the manufacturers of vehicles using liquefied petroleum gas (such as propane or butane) whether this device can be safely used in their vicinity.

Traffic security

Observe local laws and regulations while using the device. In addition, if using the device while driving a vehicle, comply with the following guidelines:

Concentrate on driving. Your first responsibility is to drive safely.

Do not talk on the device while driving. Use hands-free accessories.

When you have to make or answer a call, park the vehicle at the road side before using your device.

RF signals may affect electronic systems of motor vehicles. For more information, consult the vehicle manufacturer.

In a motor vehicle, do not place the device over the air bag or in the air bag deployment area. Otherwise, the device may hurt you owing to the strong force when the air bag inflates.

Do not use your device while flying in an aircraft. Power off your device before boarding an aircraft. Using wireless devices in an aircraft may cause danger to the operation of the aircraft and disrupt the wireless telephone network. It may also be considered illegal.

Operating environment

Do not use or charge the device in dusty, damp, and dirty places or places with magnetic fields. Otherwise, it may result in a malfunction of the circuit.

The device complies with the RF specifications when the device is used near your ear or at a distance of 1.0 cm from your body. Ensure that the device accessories such as a device case and a device holster are not composed of metal components. Keep your device 1.0 cm away from your body to meet the requirement earlier mentioned.

On a stormy day with thunder, do not use your device when it is being charged, to prevent any danger caused by lightning.

When you are on a call, do not touch the antenna. Touching the antenna affects the call quality and results in increase in power consumption. As a result, the talk time and the standby time are reduced.

While using the device, observe the local laws and regulations, and respect others' privacy and legal rights.

Keep the ambient temperature between 0°C and 40°C while the device is being charged. Keep the ambient temperature between –25°C to 50°C for using the device powered by a battery.

Prevention of hearing damage

Using a headset at high volume can damage your hearing. To reduce the risk of damage to hearing, lower the headset volume to a safe and comfortable level.

Safety of children

Comply with all precautions with regard to children's safety. Letting a child play with your device or its accessories, which may include parts that can be detached from the device, may be dangerous, as it may present a choking hazard. Ensure that small children are kept away from the device and accessories.

Accessories

Choose only batteries, chargers, and accessories approved for use with this model by the device manufacturer. The use of any other type of charger or accessory may invalidate any warranty for the device, may be in violation of local rules or laws, and may be dangerous. Please contact your dealer for information about the availability of approved batteries, chargers, and accessories in your area.

Battery and charger

Unplug the charger from the electrical plug and the device when not in use.

The battery can be charged and discharged hundreds of times before it eventually wears out.

Use the AC power supply defined in the specifications of the charger. An improper power voltage may cause a fire or a malfunction of the charger.

If battery electrolyte leaks out, ensure that the electrolyte does not touch your skin and eyes. When the electrolyte touches your skin or splashes into your eyes, wash your eyes with clean water immediately and consult a doctor.

If there is a case of battery deformation, colour change, or abnormal heating while you charge, stop using the device immediately. Otherwise, it may lead to battery leakage, overheating, explosion, or fire.

If the power cable is damaged (for example, the cord is exposed or broken), or the plug loosens, stop using the cable at once. Otherwise, it may lead to an electric shock, a short circuit of the charger, or a fire.

Do not dispose of device in fire as they may explode. Batteries may also explode if damaged.

Do not modify or remanufacture, attempt to insert foreign objects into the device, immerse or expose to water or other liquids, expose to fire, explosion or other hazard.

Avoid dropping the device. If the device is dropped, especially on a hard surface, and the user suspects damage, take it to a qualified service centre for inspection.

Improper use may result in a fire, explosion or other hazard.

Promptly dispose of used devices in accordance with local regulations.

The device should only be connected to products that bear the USB-IF logo or have completed the USB-IF compliance program.

Adapter shall be installed near the equipment and shall be easily accessible. The plug considered as disconnect device of adapter.

Output rating of charger 5V ~ 8V:2A / 8.5V~10V: 1.7A / 10.5V~12V 1.5A.

CAUTION – RISK OF EXPLOSION IF BATTERY IS REPLACED BY AN INCORRECT TYPE. DISPOSE OF USED BATTERIES ACCORDING TO THE INSTRUCTIONS.

Cleaning and maintenance

The charger is not water-resistant. Keep it dry. Protect the charger from water or vapour. Do not touch the charger with wet hands, otherwise it may lead to a short circuit, a malfunction of the device and an electric shock to the user.

Do not place your device and charger in places where they can get damaged because of collision. Otherwise, it may lead to battery leakage, device malfunction, overheating, fire, or explosion.

Do not place magnetic storage media such as magnetic cards and floppy disks near the device. Radiation from the device may erase the information stored on them.

Do not leave your device and charger in a place with an extreme high or low temperature. Otherwise, they may not function properly and may lead to a fire or an explosion. When the temperature is lower than 0°C, performance of the battery is affected.

Do not place sharp metal objects such as pins near the earpiece. The earpiece may attract these objects and hurt you when you are using the device.

Before you clean or maintain the device, power off the device and disconnect it from the charger.

Do not use any chemical detergent, powder, or other chemical agents (such as alcohol and benzene) to clean the device and the charger. Otherwise, parts of the device may be damaged or a fire can be caused. You can clean the device with soft antistatic cloth.

Do not dismantle the device or accessories. Otherwise, the warranty on the device and accessories is invalid and the manufacturer is not liable to pay for the damage.

If the device screen is broken by colliding with hard objects, do not touch or try to remove the broken part. In this case, stop using the device immediately, and then contact an authorized service centre.

Hearing Aid Compatibility (HAC)

Regulations for wireless devices

This phone has been tested and rated for use with hearing aids for some of the wireless technologies that it uses. However, there may be some newer wireless technologies used in this phone that have not been tested yet for use with hearing aids. It is important to try the different features of this phone thoroughly and in different locations, using your hearing aid or cochlear implant, to determine if you hear any interfering noise. Consult your service provider or the manufacturer of this phone for information on hearing aid compatibility. If you have questions about return or exchange policies, consult your service provider or phone retailer.

The U.S. Federal Communications Commission (FCC) has established requirements for digital wireless mobile devices to be compatible with hearing aids and other hearing assistive devices.

The wireless telephone industry has developed a rating system for wireless mobile devices to assist hearing device users find mobile devices that may be compatible with their hearing devices.

The ratings are not guarantees. Results will vary depending on the user's hearing device and hearing loss. If your hearing devices happens to be vulnerable to interference, you may not be able to use a rated phone successfully. Trying out the mobile device with your hearing device is the best way to evaluate it for your personal needs.

The FCC has adopted HAC rules for digital wireless phones. These rules require certain phone to be tested and rated under the American National Standard Institute (ANSI) C63.19-2011 hearing aid compatibility standards. The ANSI standard for hearing aid compatibility contains two types of ratings:

M-Ratings: Phones rated M3 or M4 meet FCC requirements and are likely to generate less interference to hearing devices than phones that are not labelled. M4 is the better/higher of the two ratings.

T-Ratings: Phones rated T3 or T4 meet FCC requirements and are likely to be more usable with a hearing device's telecoil ("T Switch" or "Telephone Switch") than unrated phones. T4 is the better/ higher of the two ratings. (Note not all hearing devices have telecoils in them.)

The tested M-Rating and T-Rating for this device (FCC ID: ZL5S41), M3 and T4.
The tested M-Rating and T-Rating for this device (FCC ID: ZL5S41A), M3 and T4.

Emergency call

You can use your device for emergency calls in the service area. The connection, however, cannot be guaranteed in all conditions. You should not rely solely on the device for essential communications.

FCC statement

The device complies with part 15 of the FCC Rules. Operation is subject to the following two conditions: (1) This device may not cause harmful interference, and (2) this device must accept any interference received, including interference that may cause undesired operation.

The antenna(s) used for this transmitter must not be co-located or operating in conjunction with any other antenna or transmitter.

Note: The country code selection is for non-US model only and is not available to all US model. Per FCC regulation, all WiFi product marketed in US must fixed to US operation channels only.

This mobile phone has been tested and found to comply with the limits for a Class B digital device, pursuant to Part 15 of the FCC Rules. These limits are designed to provide reasonable protection against harmful interference in a residential installation. This equipment generates, uses and can radiated radio frequency energy and, if not installed and used in accordance with the instructions, may cause harmful interference to radio communications. However, there is no guarantee that interference will not occur in a particular installation. If this equipment does

cause harmful interference to radio or television reception, which can be determined by turning the equipment off and on, the user is encouraged to try to correct the interference by one or more of the following measures:

- Reorient or relocate the receiving antenna.
- Increase the separation between the equipment and receiver.
- Connect the equipment into an outlet on a circuit different from that to which the receiver is connected.
- Consult the dealer or an experienced radio/TV technician for help.

Changes or modifications not expressly approved by the party responsible for compliance could void the user's authority to operate the equipment.

Industry Canada Statement

This device complies with Industry Canada license-exempt RSS standard(s). Operation is subject to the following two conditions:

(1) this device may not cause interference, and

(2) this device must accept any interference, including interference that may cause undesired operation of the device.

Le présent appareil est conforme aux CNR d'Industrie Canada applicables aux appareils radio exempts de licence. L'exploitation est autorisée aux deux conditions suivantes:

(1) l'appareil ne doit pas produire de brouillage, et

(2) l'utilisateur de l'appareil doit accepter tout brouillage radioélectrique subi, męme si le brouillage est susceptible d'en compromettre le fonctionnement.

This Class B digital apparatus complies with Canadian ICES-003; CAN ICES-3(B)/NMB-3(B).

The device could automatically discontinue transmission in case of absence of information to transmit, or operational failure. Note that this is not intended to prohibit transmission of control or signaling information or the use of repetitive codes where required by the technology.

The device for operation in the band 5150–5250 MHz is only for indoor use to reduce the potential for harmful interference to co-channel mobile satellite systems.

Radiation Exposure Statement:

The product comply with the Canada portable RF exposure limit set forth for an uncontrolled environment and are safe for intended operation as described in this manual. The further RF exposure reduction can be achieved if the product can be kept as far as possible from the user body or set the device to lower output power if such function is available.

For body worn operation, this device has been tested and meets the IC RF exposure guidelines for use with an accessory that contains no metal and positions the handset a minimum of 1 cm from the body. Use of other accessories may not ensure compliance with IC RF exposure guidelines.

Déclaration d'exposition aux radiations:

Le produit est conforme aux limites d'exposition pour les appareils portables RF pour les Etats-Unis et le Canada établies pour un environnement non contrôlé.
Le produit est sűr pour un fonctionnement tel que décrit dans ce manuel. La réduction aux expositions RF peut ętre augmentée si l'appareil peut ętre conservé aussi loin que possible du corps de l'utilisateur ou que le dispositif est réglé sur la puissance de sortie la plus faible si une telle fonction est disponible.

Cet équipement est conforme aux limites d'exposition aux rayonnements IC établies pour un environnement non contrôlé.

Cet équipement doit ętre installé et utilisé avec un minimum de 1.0 cm de distance entre la source de rayonnement et votre corps.

This device and its antenna(s) must not be co-located or operating in conjunction with any other antenna or transmitter, except tested built-in radios. The County Code Selection feature is disabled for products marketed in the US/ Canada.

Cet appareil et son antenne ne doivent pas ętre situés ou fonctionner en conjonction avec une autre antenne ou un autre émetteur, exception faites des radios intégrées qui ont été testées. La fonction de sélection de l'indicatif du pays est désactivée pour les produits commercialisés aux États-Unis et au Canada.

RF exposure information (SAR)

This device meets the government's requirements for exposure to radio waves.

This device is designed and manufactured not to exceed the emission limits for exposure to radio frequency (RF) energy set by the Federal Communications Commission of the U.S. Government.

For body worn operation, this device has been tested and meets the FCC RF exposure guidelines for use with an accessory that contains no metal and positions the handset a minimum of 1 cm from the body. Use of other accessories may not ensure compliance with FCC RF exposure guidelines.

The SAR limit set by the FCC is 1.6W/kg.

US SKU (FCC ID: ZL5S41):

The highest reported SAR values under the FCC regulatory for the phone are listed below:

Head SAR: 1.19 W/kg, Body SAR: 0.97 W/kg, Wireless Router SAR: 0.97 W/kg

APAC SKU (FCC ID: ZL5S41A):

The highest reported SAR values under the FCC regulatory for the phone are listed below:

Head SAR: 0.97 W/kg, Body SAR: 1.11 W/kg, Wireless Router SAR: 1.11 W/kg

To reduce the level of exposure to radiations, please do the following:
(i) use the mobile phone in good reception conditions,
(ii) use a hand free kit,
(iii) for pregnant women, please hold the mobile phone far from the stomach.
(iv) use the mobile phone far from genital parts.

Prevention of hearing loss

To prevent possible hearing damage, do not listen at high volume levels for long periods.

CE SAR Compliance

This device meets the EU requirements (1999/519/EC) on the limitation of exposure of the general public to electromagnetic fields by way of health protection.

The limits are part of extensive recommendations for the protection of the general public. These recommendations have been developed and checked by independent scientific organizations through regular and thorough evaluations of scientific studies. The unit of measurement for the European Council's recommended limit for mobile devices is the "Specific Absorption Rate" (SAR), and the SAR limit is 2.0 W/ kg averaged over 10 gram of tissue. It meets the requirements of the International Commission on Non-Ionizing Radiation Protection (ICNIRP).

For body worn operation, this device has been tested and meets the ICNIRP exposure guidelines and the European Standard EN 62209-2, for use with dedicated accessories. Use of other accessories which contain metals may not ensure compliance with ICNIRP exposure guidelines.

SAR is measured with the device at a separation of 5 mm to the body, while transmitting at the highest certified output power level in all frequency bands of the mobile device.

The highest reported SAR values under the CE regulatory for the phone are list below:

EU SKU

Head SAR: 0.547 W/kg, Body SAR: 1.080 W/kg

APAC SKU

Head SAR: 0.443 W/kg, Body SAR: 1.280 W/kg

To reduce exposure to RF energy, use a hands-free accessory or other similar option to keep this device away from your head and body. Carry this device at least 5 mm away from your body to ensure exposure levels remain at or below the as-tested levels. Choose the belt clips, holsters, or other similar body-worn accessories which do not contain metallic components to support operation in this manner. Cases with metal parts may change the RF performance of the device, including its compliance with RF exposure guidelines, in a manner that has not been tested or certified, and use such accessories should be avoided.

Disposal and recycling information

This symbol on the device (and any included batteries) indicates that they should not be disposed of as normal household garbage. Do not dispose of your device or batteries as unsorted municipal waste. The device (and any batteries) should be handed over to a certified collection point for recycling or proper disposal at the end of their life.

For more detailed information about the recycling of the device or batteries, contact your local city office, the household waste disposal service, or the retail store where you purchased this device.

The disposal of this device is subject to the Waste from Electrical and Electronic Equipment (WEEE) directive of the European Union. The reason for separating WEEE and batteries from other waste is to minimize the potential environmental impacts on human health of any hazardous substances that may be present.

Reduction of hazardous substances

This device is compliant with the EU Registration, Evaluation, Authorization and Restriction of Chemicals (REACH) Regulation (Regulation No 1907/2006/EC of the European Parliament and of the Council) and the EU Restriction of Hazardous Substances (RoHS) Directive (Directive 2011/65/EU of the European Parliament and of the Council). For more information about the REACH compliance of the device, visit the Web site www.catphones.com/certification. You are recommended to visit the Web site regularly for up-to-date information.

EU regulatory conformance

Hereby, the manufacturer declares that this device is in compliance with the essential requirements and other relevant provisions of Directive 2014/53/EU.

For the declaration of conformity, visit the Web site www.catphones.com/support/s41-smartphone.

Note: Observe the national local regulations in the location where the device is to be used. This device may be restricted for use in some or all member states of the European Union (EU).

Note: This device may be operated in all member states of the EU.

EU Compliance Statement

This device is restricted to indoor use only when operating in the 5150 to 5350 MHz frequency range.

Restrictions in: Belgium (BE), Bulgaria (BG), Czech Republic (CZ), Denmark (DK), Germany (DE), Estonia (EE), Ireland (IE), Greece (EL), Spain (ES), France (FR), Croatia (HR), Italy (IT), Cyprus (CY), Latvia (LV), Lithuania (LT), Luxembourg (LU), Hungary (HU), Malta (MT), Netherlands (NL), Austria (AT), Poland (PL), Portugal (PT), Romania (RO), Slovenia (SI), Slovakia (SK), Finland (FI), Sweden (SE), United Kingdom (UK), Switzerland (CH), Norway (NO), Iceland (IS), Liechtenstein (LI) and Turkey (TR).

Spectrum and Power (EU SKU)

Spectrum	Conducted power (dBm)
GSM 900	33.11
GSM 1800	29.47
WCDMA B1	23
WCDMA B5	22.99
WCDMA B8	23.24
FDD-LTE B1	22.97
FDD-LTE B3	22.79
FDD-LTE B7	22.84
FDD-LTE B8	22.9
FDD-LTE B20	23.16
BT/EDR	7.5
BLE	6.1
WLAN 2.4G	17.1
WLAN 5G	15.68
NFC 13.56MHz	-8.86 (dBuA/m at10m)

Spectrum and Power (APAC SKU)

Spectrum	Conducted power (dBm)
GSM 900	33.13
GSM 1800	29.87
WCDMA B1	22.92
WCDMA B5	23.35
WCDMA B8	24.47
FDD-LTE B1	22.9
FDD-LTE B3	22.81
FDD-LTE B5	23.28
FDD-LTE B7	22.63
FDD-LTE B8	23
FDD-LTE B28	24.43
FDD-LTE B38	22.93
BT/EDR	6.8
BLE	5.1
WLAN 2.4G	16.4
WLAN 5G	13.81
NFC 13.56MHz	-12.05 (dBuA/m at10m)

Google legal attribution

Google, Android, Google Play and other marks are trademarks of Google Inc.

S41 specification

Item	Specifications
Operating System	Android™ 7.0
Platform	MTK 6757 OctaCore 2.3GHz
Memory	• Internal Memory (ROM/FLASH): 32GB eMMCv5.1 • Internal Memory (RAM0: 3GB RAM LPDDR3 • External Memory: SDXC. Class 10/Ultra high speed/128GB
Cellular Network	• 2G Band: GSM, GPRS, EDGE (Class 33) • 3G Band: HSPA, R9 • 4G Band: LTE Cat6
Display	5.0”HD with Capacitive 4 points touch
Camera	• Rear Camera: 13MP AF with LED flash • Front Camera: 8MP FF
Sensor	Proximity & Light sensor, Accelerometer, E-compass
Connectivity	• Bluetooth: BT 4.2 • Wi-Fi: 802.11 a (5GHz), 802.11 b/g (2.4GHz), 802.11 n (2.4G/5G) • GPS Support: GPS, AGPS, Glonass • Others: E911, FM RX, WiFi Direct, NFC
Battery	• Type: Non-removable • Size: 5000mAh
Others	• Ingress Protection: IP68 • Drop Test: 1.8m
Dimensions	152 x 75 x 12.85 mm
Weight	218 g

** Design and specifications are subject to change without prior notice.*

Declaration of Conformity

Manufacturer:
Name: Bullitt Mobile Limited
Address: One Valpy, Valpy Street, Reading, Berkshire, England RG1 1AR
Radio Equipment:
Model: S41
Description: Rugged Smart Phone
Software version: LTE_S0201121.1_S41
Supplied Accessories and Components: Adapter, USB cable, Earphone, OTG cable

We, Bullitt Mobile Limited, declare under our sole responsibility that the product described above is in conformity with the relevant Union harmonization legislations:

RE Directive (2014/53/EU), RoHS Directive (2011/65/EU)

The following harmonized standards and/or other relevant standards have been applied:

1. **Health and Safety (Article 3.1(a) of the RE Directive)**
   - EN 62311:2008, EN 62479:2010
   - EN 50360:2001/A1:2012, EN 62209-1:2006,
   - EN 50566:2013/AC:2014, EN 62209-2:2010
   - EN 60950-1:2006/A11:2009+A1:2010+A12:2011+A2:2013
   - EN50332-1 :2013
   - EN50332-2 :2013
2. **Electromagnetic compatibility (Article 3.1 (b) of the RE Directive)**
   - EN 301 489-1 V2.1.1, Final Draft EN 301 489-3 V2.1.1
   - EN 301 489-17 V3.1.1, Draft EN 301 489-19 V2.1.0, Draft EN 301 489-52 V1.1.0
   - EN 55032:2015/AC:2016 Class B
   - EN55024: 2010/A1:2015
3. **Radio frequency spectrum usage (Article 3.2 of the RE Directive)**
   - EN 301 511 V12.5.1
   - EN 301 908-1 V11.1.1, EN 301 908-2 V11.1.1, EN 301 908-13 V11.1.1
   - EN 300 328 V2.1.1, EN 301 893 V2.1.1
   - EN 303 413 V1.1.0, EN 300 330 V2.1.1
   - Final Draft EN 303 345 V1.1.7
4. **RoHS Directive (2011/65/EU)**
   - EN 50581:2012

The notified body (Name: **PHOENIX TESTLAB GMBH**, ID: **0700**) performed the conformity assessment according to Annex III of the RE Directive and issued the EU-type examination certificate (Ref. No.: 17-212188).

Signed for and on behalf of: Bullitt Mobile Limited

Place: One Valpy, Valpy Street, Reading, Berkshire, England RG1 1AR, **Date:** July 24, 2017

Name: Wayne Huang, **Function:** Director of ODM Management, **Signature:**