System Check_Head_835MHz

DUT: D835V2-499

Communication System: CW; Frequency: 835 MHz;Duty Cycle: 1:1
Medium: HSL_850_170808 Medium parameters used: f = 835 MHz; σ = 0.909 S/m; ε_r = 42.254; ρ = 1000 kg/m^3
Ambient Temperature：23.4 ℃; Liquid Temperature：22.4 ℃

DASY5 Configuration
- Probe: EX3DV4 - SN3931; ConvF(10.35, 10.35, 10.35); Calibrated: 2016/10/3;
- Sensor-Surface: 1.4mm (Mechanical Surface Detection)
- Electronics: DAE3 Sn577; Calibrated: 2016/9/28
- Phantom: SAM_Right; Type: QD000P40CD; Serial: S/N:1801
- Measurement SW: DASY52, Version 52.8 (8); SEMCAD X Version 14.6.10 (7373)

Pin=250mW/Area Scan (61x61x1): Interpolated grid: dx=1.500 mm, dy=1.500 mm
Maximum value of SAR (interpolated) = 3.39 W/kg

Pin=250mW/Zoom Scan (5x5x7)/Cube 0: Measurement grid: dx=8mm, dy=8mm, dz=5mm
Reference Value = 63.48 V/m; Power Drift = -0.08 dB
Peak SAR (extrapolated) = 3.83 W/kg
SAR(1 g) = 2.54 W/kg; SAR(10 g) = 1.67 W/kg
Maximum value of SAR (measured) = 3.39 W/kg

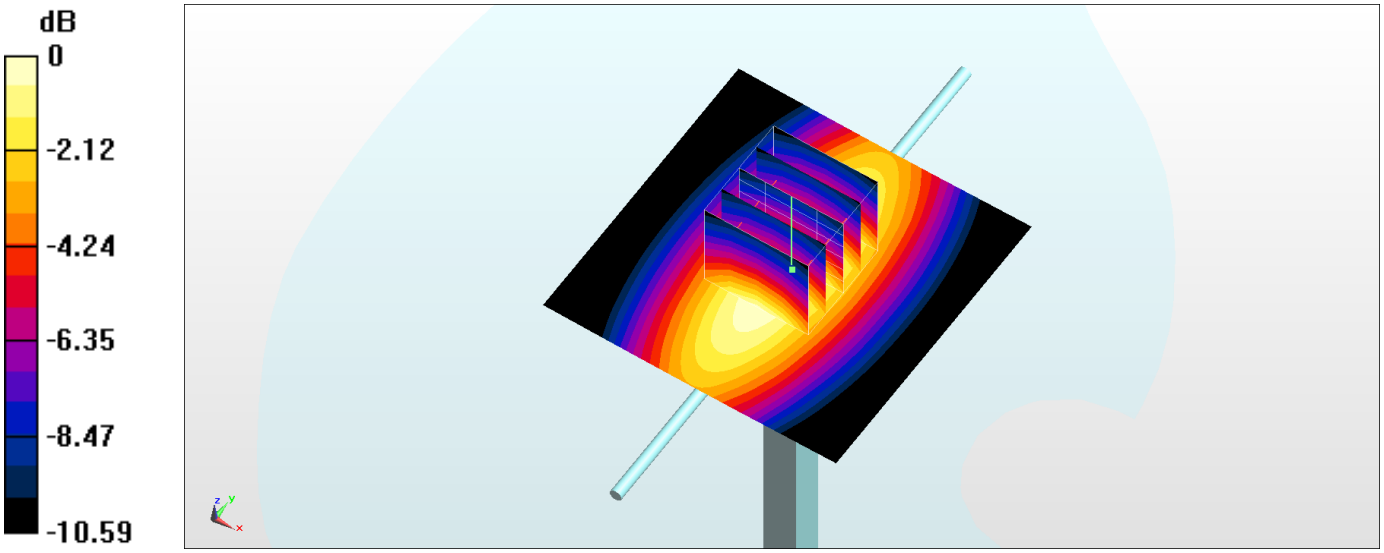

0 dB = 3.39 W/kg = 5.30 dBW/kg

System Check_Body_835MHz

DUT: D835V2-499

Communication System: CW; Frequency: 835 MHz;Duty Cycle: 1:1
Medium: MSL_850_170803 Medium parameters used: f = 835 MHz; σ = 0.977 S/m; ε_r = 55.89; ρ = 1000 kg/m^3
Ambient Temperature：23.1 ℃; Liquid Temperature：22.1 ℃

DASY5 Configuration
- Probe: ES3DV3 - SN3270; ConvF(6.01, 6.01, 6.01); Calibrated: 2016/8/26;
- Sensor-Surface: 3mm (Mechanical Surface Detection)
- Electronics: DAE4 Sn778; Calibrated: 2017/5/22
- Phantom: SAM_RIGHT; Type: QD000P40CD; Serial: 1719
- Measurement SW: DASY52, Version 52.8 (8); SEMCAD X Version 14.6.10 (7373)

Pin=250mW/Area Scan (61x61x1): Interpolated grid: dx=1.500 mm, dy=1.500 mm
Maximum value of SAR (interpolated) = 3.10 W/kg

Pin=250mW/Zoom Scan (5x5x7)/Cube 0: Measurement grid: dx=8mm, dy=8mm, dz=5mm
Reference Value = 57.05 V/m; Power Drift = -0.12 dB
Peak SAR (extrapolated) = 3.78 W/kg
SAR(1 g) = 2.61 W/kg; SAR(10 g) = 1.72 W/kg
Maximum value of SAR (measured) = 3.05 W/kg

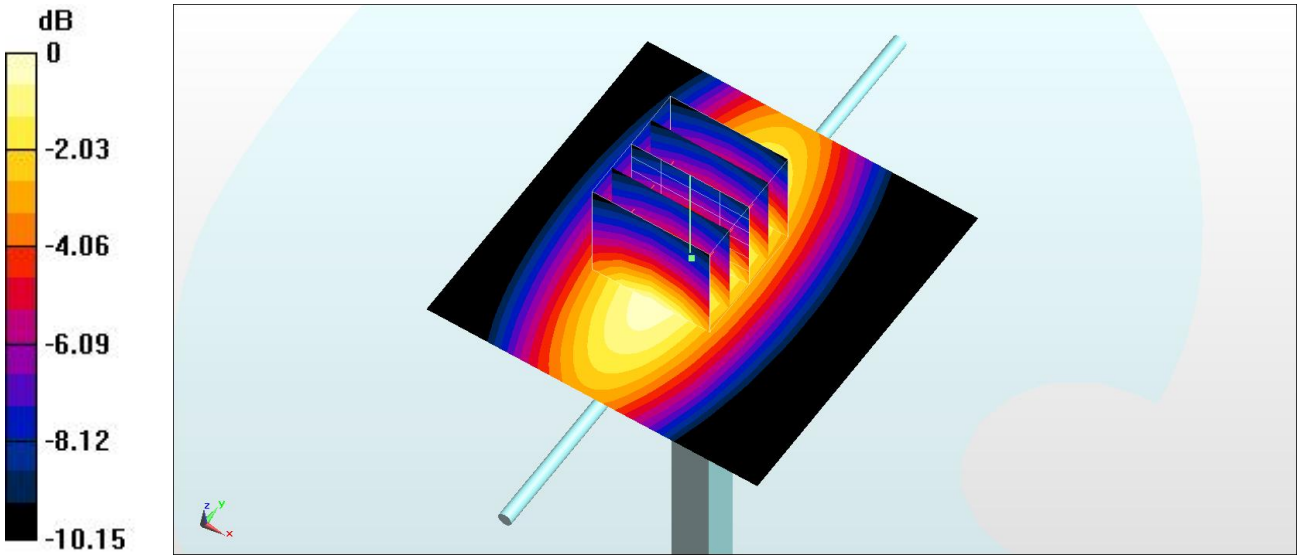

0 dB = 3.05 W/kg = 4.84 dBW/kg

System Check_Head_1750MHz

DUT: D1750V2-1068

Communication System: CW; Frequency: 1750 MHz;Duty Cycle: 1:1
Medium: HSL_1750_170807 Medium parameters used: f = 1750 MHz; σ = 1.369 S/m; ε_r = 40.933; ρ = 1000 kg/m^3
Ambient Temperature：23.5 ℃; Liquid Temperature：22.5 ℃

DASY5 Configuration
- Probe: EX3DV4 - SN3931; ConvF(8.68, 8.68, 8.68); Calibrated: 2016/10/3;
- Sensor-Surface: 1.4mm (Mechanical Surface Detection)
- Electronics: DAE3 Sn577; Calibrated: 2016/9/28
- Phantom: SAM_Right; Type: QD000P40CD; Serial: S/N:1801
- Measurement SW: DASY52, Version 52.8 (8); SEMCAD X Version 14.6.10 (7373)

Pin=250mW/Area Scan (61x61x1): Interpolated grid: dx=1.500 mm, dy=1.500 mm
Maximum value of SAR (interpolated) = 14.1 W/kg

Pin=250mW/Zoom Scan (5x5x7)/Cube 0: Measurement grid: dx=8mm, dy=8mm, dz=5mm
Reference Value = 103.2 V/m; Power Drift = 0.00 dB
Peak SAR (extrapolated) = 16.4 W/kg
SAR(1 g) = 9.14 W/kg; SAR(10 g) = 4.98 W/kg
Maximum value of SAR (measured) = 13.7 W/kg

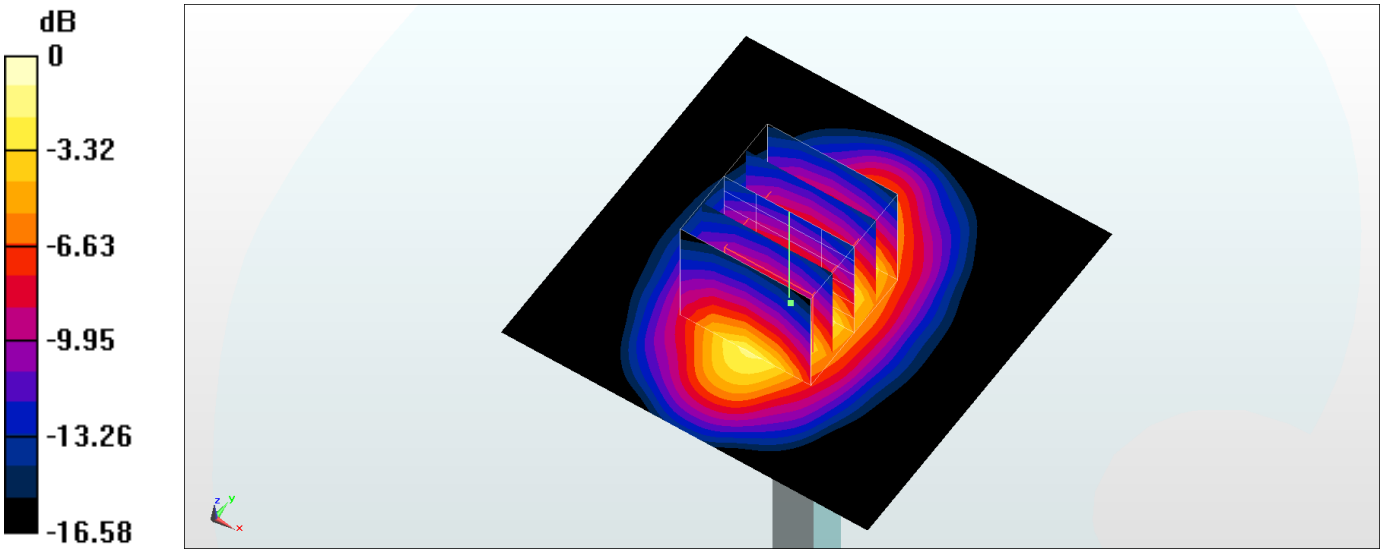

0 dB = 13.7 W/kg = 11.37 dBW/kg

System Check_Body_1750MHz

DUT: D1750V2-1068

Communication System: CW ; Frequency: 1750 MHz;Duty Cycle: 1:1
Medium: MSL_1750_170802 Medium parameters used: f = 1750 MHz; σ = 1.488 S/m; ε_r = 54.987; ρ = 1000 kg/m^3
Ambient Temperature：23.4 ℃; Liquid Temperature：22.4 ℃

DASY5 Configuration
- Probe: ES3DV3 - SN3270; ConvF(4.95, 4.95, 4.95); Calibrated: 2016/8/26;
- Sensor-Surface: 3mm (Mechanical Surface Detection)
- Electronics: DAE4 Sn778; Calibrated: 2017/5/22
- Phantom: SAM_RIGHT; Type: QD000P40CD; Serial: 1719
- Measurement SW: DASY52, Version 52.8 (8); SEMCAD X Version 14.6.10 (7373)

Pin=250mW/Area Scan (61x61x1): Interpolated grid: dx=1.500 mm, dy=1.500 mm
Maximum value of SAR (interpolated) = 11.7 W/kg

Pin=250mW/Zoom Scan (5x5x7)/Cube 0: Measurement grid: dx=8mm, dy=8mm, dz=5mm
Reference Value = 89.45 V/m; Power Drift = 0.18 dB
Peak SAR (extrapolated) = 16.0 W/kg
SAR(1 g) = 9.56 W/kg; SAR(10 g) = 5.19 W/kg
Maximum value of SAR (measured) = 11.9 W/kg

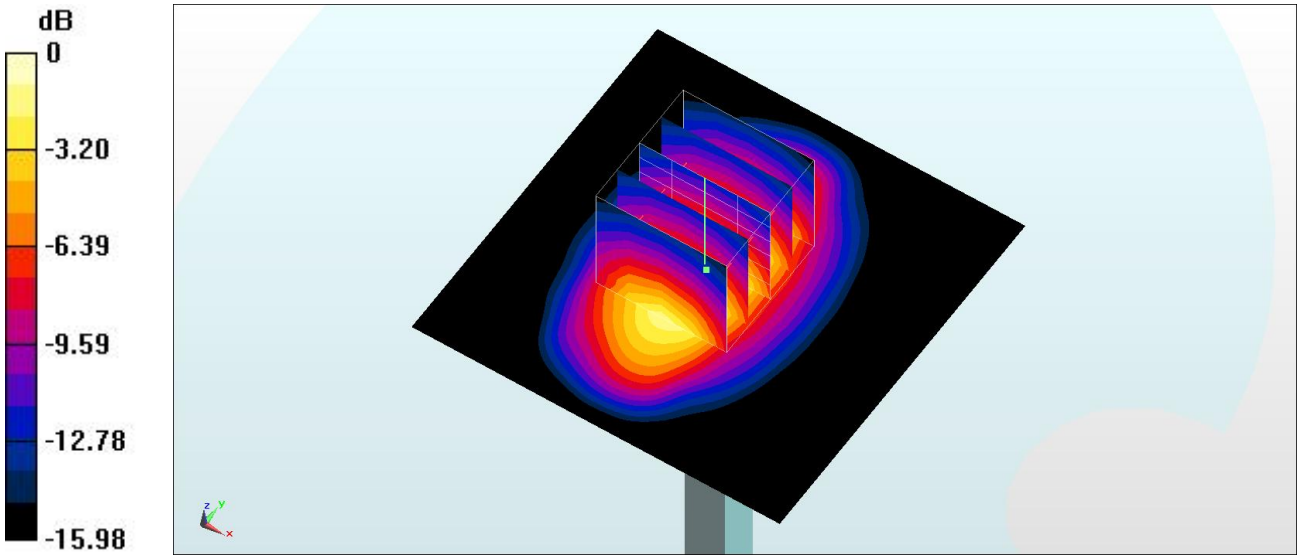

0 dB = 11.9 W/kg = 10.76 dBW/kg

System Check_Head_1900MHz

DUT: D1900V2-5d041

Communication System: CW; Frequency: 1900 MHz;Duty Cycle: 1:1
Medium: HSL_1900_170807 Medium parameters used: f = 1900 MHz; σ = 1.459 S/m; ε_r = 40.235; ρ = 1000 kg/m^3
Ambient Temperature：23.6 ℃; Liquid Temperature：22.6 ℃

DASY5 Configuration
- Probe: EX3DV4 - SN3931; ConvF(8.42, 8.42, 8.42); Calibrated: 2016/10/3;
- Sensor-Surface: 1.4mm (Mechanical Surface Detection)
- Electronics: DAE3 Sn577; Calibrated: 2016/9/28
- Phantom: SAM_Right; Type: QD000P40CD; Serial: S/N:1801
- Measurement SW: DASY52, Version 52.8 (8); SEMCAD X Version 14.6.10 (7373)

Pin=250mW/Area Scan (61x61x1): Interpolated grid: dx=1.500 mm, dy=1.500 mm
Maximum value of SAR (interpolated) = 17.4 W/kg

Pin=250mW/Zoom Scan (5x5x7)/Cube 0: Measurement grid: dx=8mm, dy=8mm, dz=5mm
Reference Value = 112.4 V/m; Power Drift = 0.01 dB
Peak SAR (extrapolated) = 20.9 W/kg
SAR(1 g) = 11 W/kg; SAR(10 g) = 5.73 W/kg
Maximum value of SAR (measured) = 17.1 W/kg

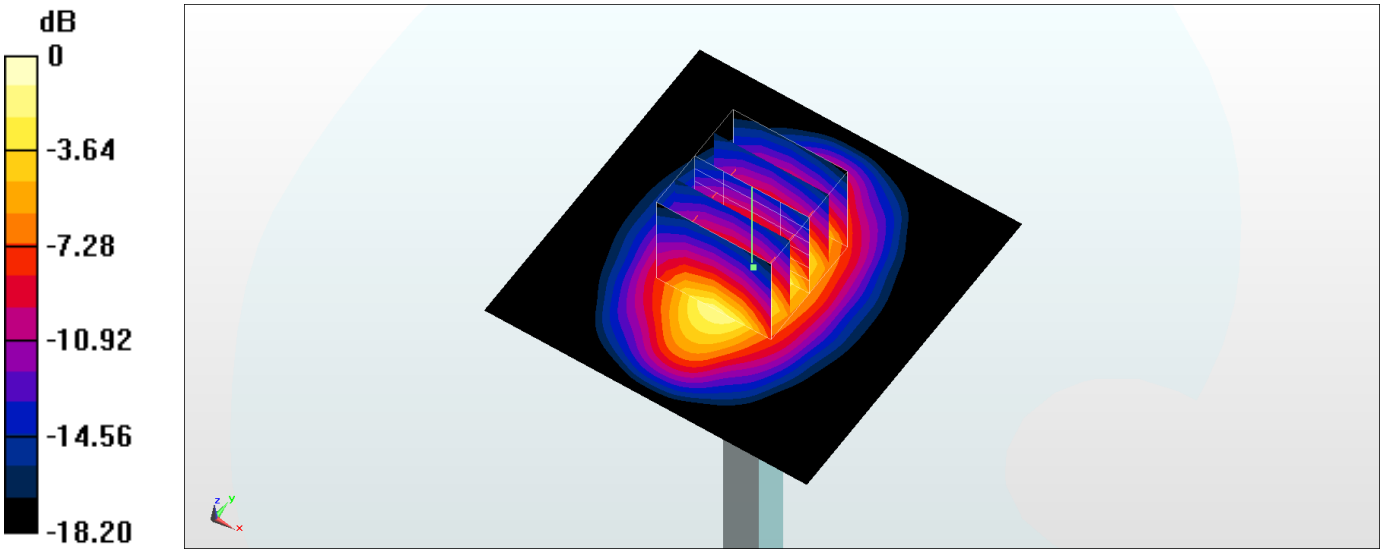

0 dB = 17.1 W/kg = 12.33 dBW/kg

System Check_Body_1900MHz

DUT: D1900V2-5d041

Communication System: CW; Frequency: 1900 MHz;Duty Cycle: 1:1
Medium: MSL_1900_170802 Medium parameters used: f = 1900 MHz; σ = 1.565 S/m; ε_r = 53.538; ρ = 1000 kg/m^3
Ambient Temperature：23.4 ℃; Liquid Temperature：22.4 ℃

DASY5 Configuration
- Probe: ES3DV3 - SN3270; ConvF(4.7, 4.7, 4.7); Calibrated: 2016/8/26;
- Sensor-Surface: 3mm (Mechanical Surface Detection)
- Electronics: DAE4 Sn778; Calibrated: 2017/5/22
- Phantom: SAM_RIGHT; Type: QD000P40CD; Serial: 1719
- Measurement SW: DASY52, Version 52.8 (8); SEMCAD X Version 14.6.10 (7373)

Pin=250mW/Area Scan (61x61x1): Interpolated grid: dx=1.500 mm, dy=1.500 mm
Maximum value of SAR (interpolated) = 13.3 W/kg

Pin=250mW/Zoom Scan (5x5x7)/Cube 0: Measurement grid: dx=8mm, dy=8mm, dz=5mm
Reference Value = 93.85 V/m; Power Drift = 0.01 dB
Peak SAR (extrapolated) = 17.5 W/kg
SAR(1 g) = 10.2 W/kg; SAR(10 g) = 5.4 W/kg
Maximum value of SAR (measured) = 12.7 W/kg

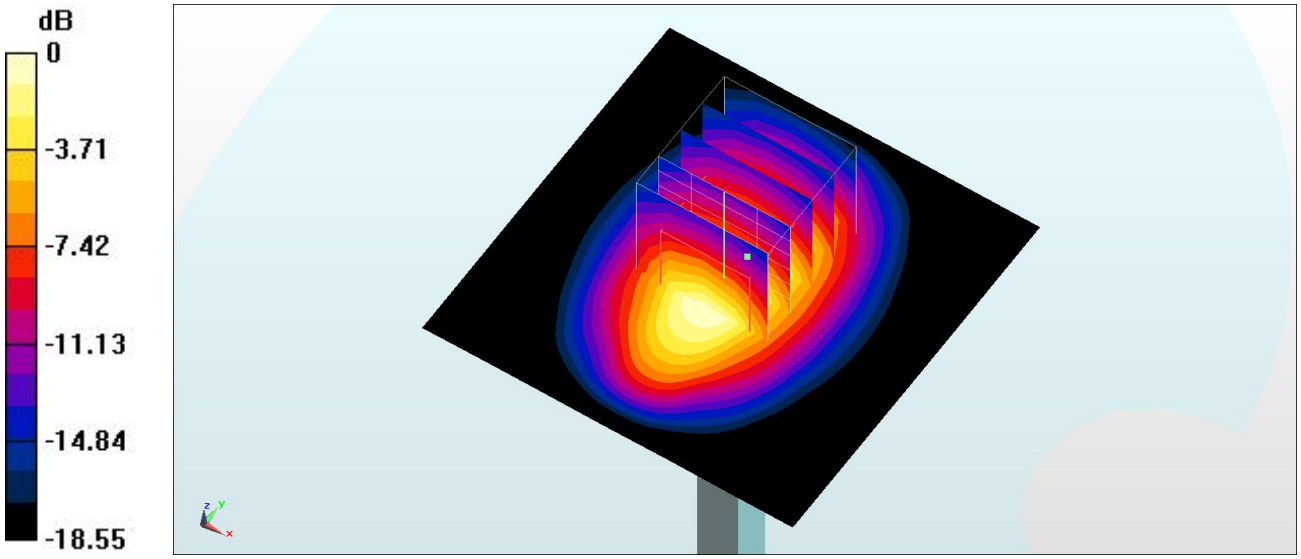

0 dB = 12.7 W/kg = 11.04 dBW/kg

System Check_Head_2450MHz

DUT: D2450V2-735

Communication System: CW; Frequency: 2450 MHz;Duty Cycle: 1:1
Medium: HSL_2450_170809 Medium parameters used: f = 2450 MHz; σ = 1.823 S/m; ε_r = 40.069; ρ = 1000 kg/m^3
Ambient Temperature：23.6 ℃; Liquid Temperature：22.6 ℃

DASY5 Configuration:
- Probe: EX3DV4 - SN3925; ConvF(7.85, 7.85, 7.85); Calibrated: 2017/5/24;
- Sensor-Surface: 1.4mm (Mechanical Surface Detection)
- Electronics: DAE3 Sn495; Calibrated: 2017/5/22
- Phantom: SAM_Left; Type: QD000P40CD; Serial: TP:1815
- Measurement SW: DASY52, Version 52.8 (8);SEMCAD X Version 14.6.10 (7373)

Pin=250mW/Area Scan (61x61x1): Interpolated grid: dx=1.200 mm, dy=1.200 mm
Maximum value of SAR (interpolated) = 19.7 W/kg

Pin=250mW/Zoom Scan (7x7x7)/Cube 0: Measurement grid: dx=5mm, dy=5mm, dz=5mm
Reference Value = 94.98 V/m; Power Drift = 0.17 dB
Peak SAR (extrapolated) = 26.0 W/kg
SAR(1 g) = 12.7 W/kg; SAR(10 g) = 5.93 W/kg
Maximum value of SAR (measured) = 19.3 W/kg

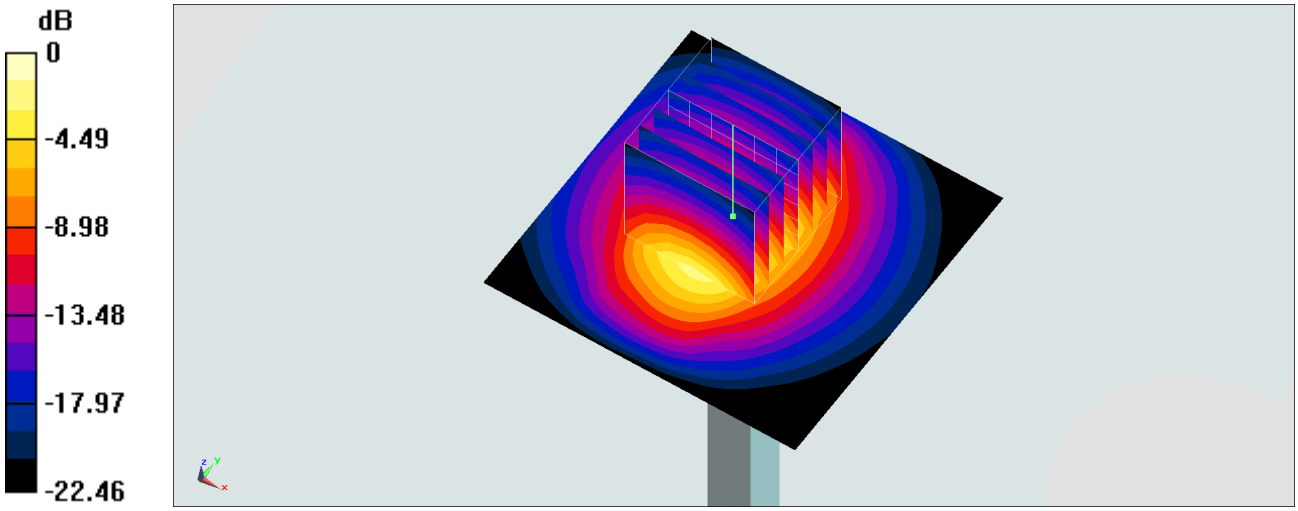

0 dB = 19.3 W/kg = 12.86 dBW/kg

System Check_Body_2450MHz

DUT: D2450V2-735

Communication System: CW; Frequency: 2450 MHz;Duty Cycle: 1:1
Medium: MSL_2450_170809 Medium parameters used: f = 2450 MHz; σ = 1.968 S/m; ε_r = 54.054; ρ = 1000 kg/m^3
Ambient Temperature：23.6 ℃; Liquid Temperature：22.6 ℃

DASY5 Configuration:
- Probe: EX3DV4 - SN3925; ConvF(7.94, 7.94, 7.94); Calibrated: 2017/5/24;
- Sensor-Surface: 1.4mm (Mechanical Surface Detection)
- Electronics: DAE3 Sn495; Calibrated: 2017/5/22
- Phantom: SAM_Left; Type: QD000P40CD; Serial: TP:1815
- Measurement SW: DASY52, Version 52.8 (8);SEMCAD X Version 14.6.10 (7373)

Pin=250mW/Area Scan (61x61x1): Interpolated grid: dx=1.200 mm, dy=1.200 mm
Maximum value of SAR (interpolated) = 18.7 W/kg

Pin=250mW/Zoom Scan (7x7x7)/Cube 0: Measurement grid: dx=5mm, dy=5mm, dz=5mm
Reference Value = 81.83 V/m; Power Drift = 0.12 dB
Peak SAR (extrapolated) = 24.7 W/kg
SAR(1 g) = 12.4 W/kg; SAR(10 g) = 5.85 W/kg
Maximum value of SAR (measured) = 18.7 W/kg

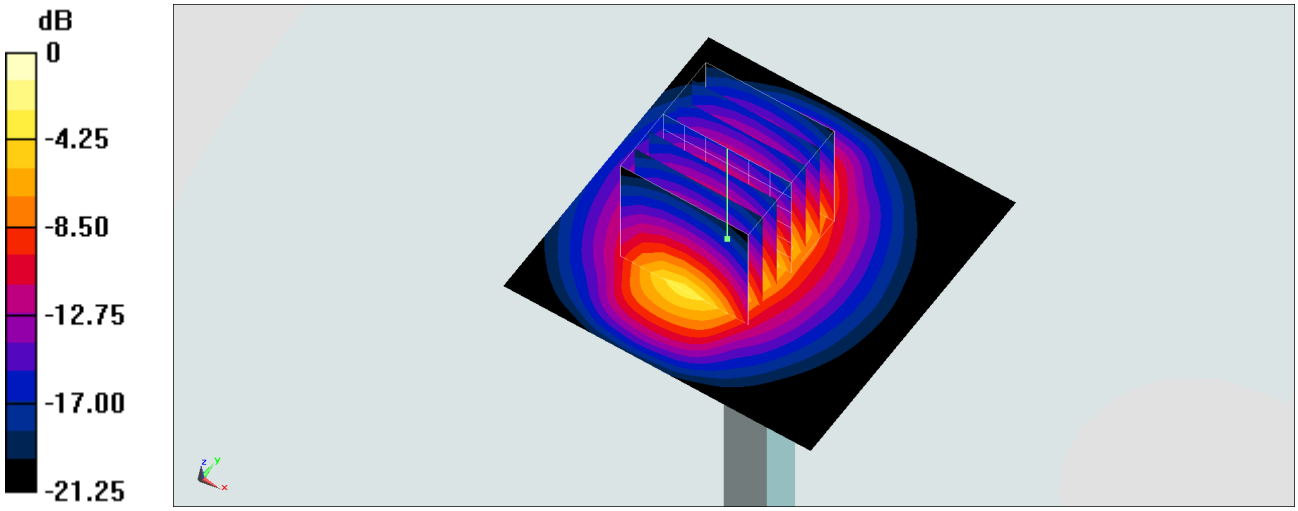

0 dB = 18.7 W/kg = 12.72 dBW/kg

System Check_Head_2600MHz

DUT: D2600V2-1008

Communication System: CW; Frequency: 2600 MHz;Duty Cycle: 1:1
Medium: HSL_2600_170804 Medium parameters used: f = 2600 MHz; σ = 1.972 S/m; ε_r = 38.112; ρ = 1000 kg/m^3
Ambient Temperature：23.3 ℃; Liquid Temperature：22.3 ℃

DASY5 Configuration
- Probe: ES3DV3 - SN3270; ConvF(4.37, 4.37, 4.37); Calibrated: 2016/8/26;
- Sensor-Surface: 3mm (Mechanical Surface Detection)
- Electronics: DAE4 Sn778; Calibrated: 2017/5/22
- Phantom: SAM LEFT; Type: QD000P40CD; Serial: TP:1718
- Measurement SW: DASY52, Version 52.8 (8); SEMCAD X Version 14.6.10 (7373)

Pin=250mW/Area Scan (81x81x1): Interpolated grid: dx=1.200 mm, dy=1.200 mm
Maximum value of SAR (interpolated) = 20.1 W/kg

Pin=250mW/Zoom Scan (7x7x7)/Cube 0: Measurement grid: dx=5mm, dy=5mm, dz=5mm
Reference Value = 100.8 V/m; Power Drift = 0.17 dB
Peak SAR (extrapolated) = 32.3 W/kg
SAR(1 g) = 15.1 W/kg; SAR(10 g) = 6.76 W/kg
Maximum value of SAR (measured) = 20.2 W/kg

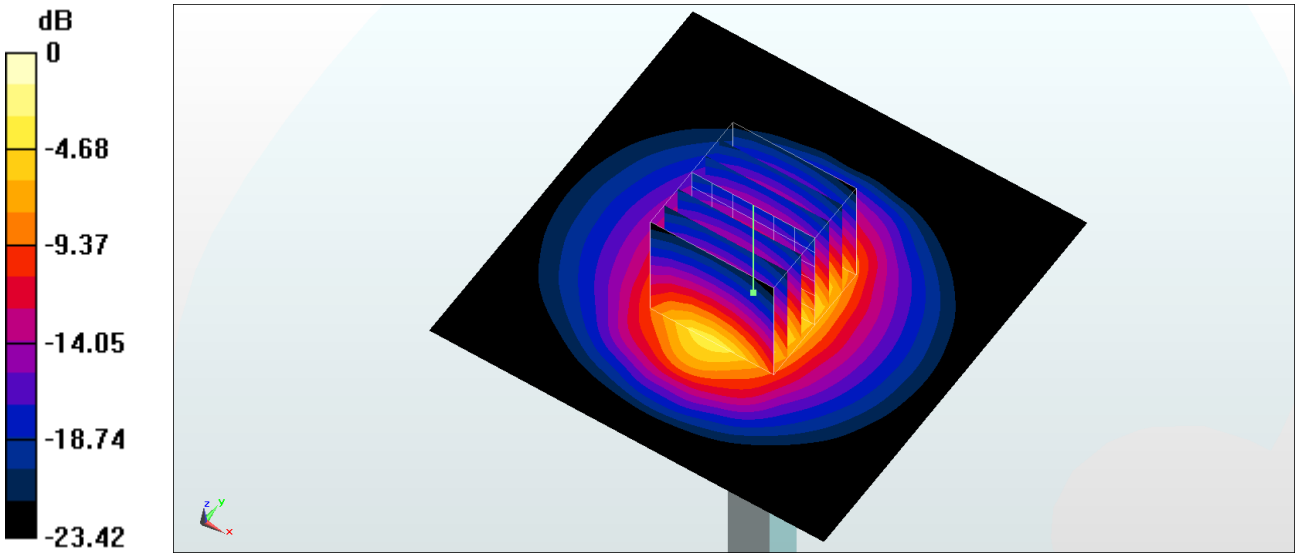

0 dB = 20.2 W/kg = 13.05 dBW/kg

System Check_Body_2600MHz

DUT: D2600V2-1008

Communication System: CW; Frequency: 2600 MHz;Duty Cycle: 1:1
Medium: MSL_2600_170731 Medium parameters used: f = 2600 MHz; σ = 2.212 S/m; ε_r = 54.187; ρ = 1000 kg/m^3
Ambient Temperature：23.2 ℃; Liquid Temperature：22.2 ℃

DASY5 Configuration
- Probe: ES3DV3 - SN3270; ConvF(4.12, 4.12, 4.12); Calibrated: 2016/8/26;
- Sensor-Surface: 3mm (Mechanical Surface Detection)
- Electronics: DAE4 Sn778; Calibrated: 2017/5/22
- Phantom: SAM_RIGHT; Type: QD000P40CD; Serial: 1719
- Measurement SW: DASY52, Version 52.8 (8); SEMCAD X Version 14.6.10 (7373)

Pin=250mW/Area Scan (71x71x1): Interpolated grid: dx=1.200 mm, dy=1.200 mm
Maximum value of SAR (interpolated) = 20.3 W/kg

Pin=250mW/Zoom Scan (7x7x7)/Cube 0: Measurement grid: dx=5mm, dy=5mm, dz=5mm
Reference Value = 97.52 V/m; Power Drift = -0.01 dB
Peak SAR (extrapolated) = 30.9 W/kg
SAR(1 g) = 14.7 W/kg; SAR(10 g) = 6.54 W/kg
Maximum value of SAR (measured) = 19.5 W/kg

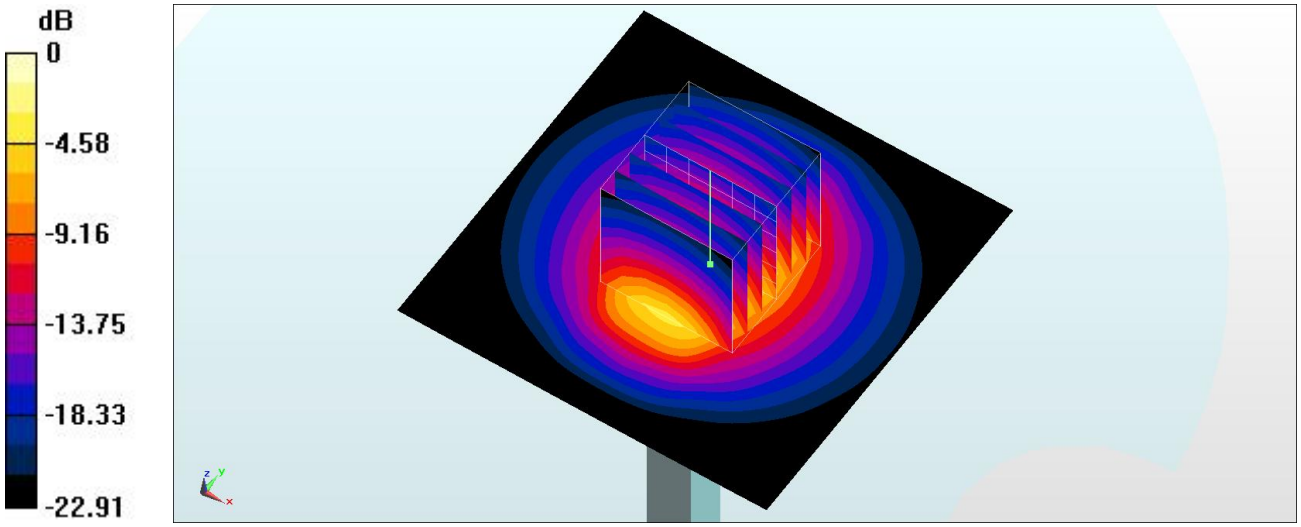

0 dB = 19.5 W/kg = 12.90 dBW/kg

System Check_Body_2600MHz

DUT: D2600V2-1008

Communication System: CW; Frequency: 2600 MHz;Duty Cycle: 1:1
Medium: MSL_2600_170801 Medium parameters used: f = 2600 MHz; σ = 2.204 S/m; ε_r = 53.899; ρ = 1000 kg/m^3
Ambient Temperature：23.5 ℃; Liquid Temperature：22.5 ℃

DASY5 Configuration
- Probe: ES3DV3 - SN3270; ConvF(4.12, 4.12, 4.12); Calibrated: 2016/8/26;
- Sensor-Surface: 3mm (Mechanical Surface Detection)
- Electronics: DAE4 Sn778; Calibrated: 2017/5/22
- Phantom: SAM LEFT; Type: QD000P40CD; Serial: TP:1718
- Measurement SW: DASY52, Version 52.8 (8); SEMCAD X Version 14.6.10 (7373)

Pin=250mW/Area Scan (71x71x1): Interpolated grid: dx=1.200 mm, dy=1.200 mm
Maximum value of SAR (interpolated) = 20.2 W/kg

Pin=250mW/Zoom Scan (7x7x7)/Cube 0: Measurement grid: dx=5mm, dy=5mm, dz=5mm
Reference Value = 97.52 V/m; Power Drift = -0.09 dB
Peak SAR (extrapolated) = 30.8 W/kg
SAR(1 g) = 14.6 W/kg; SAR(10 g) = 6.51 W/kg
Maximum value of SAR (measured) = 19.4 W/kg

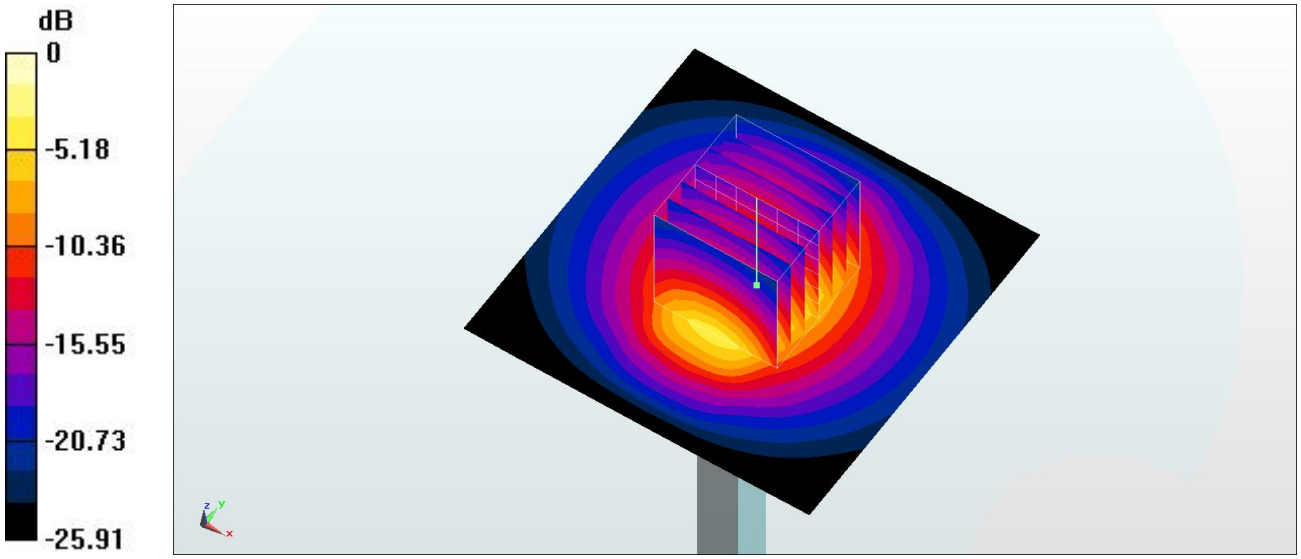

0 dB = 19.4 W/kg = 12.88 dBW/kg

System Check_Head_5250MHz

DUT: D5GHzV2-1006

Communication System: CW; Frequency: 5250 MHz;Duty Cycle: 1:1
Medium: HSL_5G_170810 Medium parameters used: f = 5250 MHz; σ = 4.498 S/m; ε_r = 35.675; ρ = 1000 kg/m^3
Ambient Temperature：23.4 ℃; Liquid Temperature：22.4 ℃

DASY5 Configuration:
- Probe: EX3DV4 - SN3925; ConvF(5.36, 5.36, 5.36); Calibrated: 2017/5/24;
- Sensor-Surface: 1.4mm (Mechanical Surface Detection)
- Electronics: DAE3 Sn495; Calibrated: 2017/5/22
- Phantom: SAM_Left; Type: QD000P40CD; Serial: TP:1815
- Measurement SW: DASY52, Version 52.8 (8);SEMCAD X Version 14.6.10 (7373)

Pin=100mW/Area Scan (71x71x1): Interpolated grid: dx=1.000 mm, dy=1.000 mm
Maximum value of SAR (interpolated) = 19.2 W/kg

Pin=100mW/Zoom Scan (7x7x7)/Cube 0: Measurement grid: dx=4mm, dy=4mm, dz=1.4mm
Reference Value = 55.95 V/m; Power Drift = 0.11 dB
Peak SAR (extrapolated) = 33.4 W/kg
SAR(1 g) = 7.76 W/kg; SAR(10 g) = 2.13 W/kg
Maximum value of SAR (measured) = 19.7 W/kg

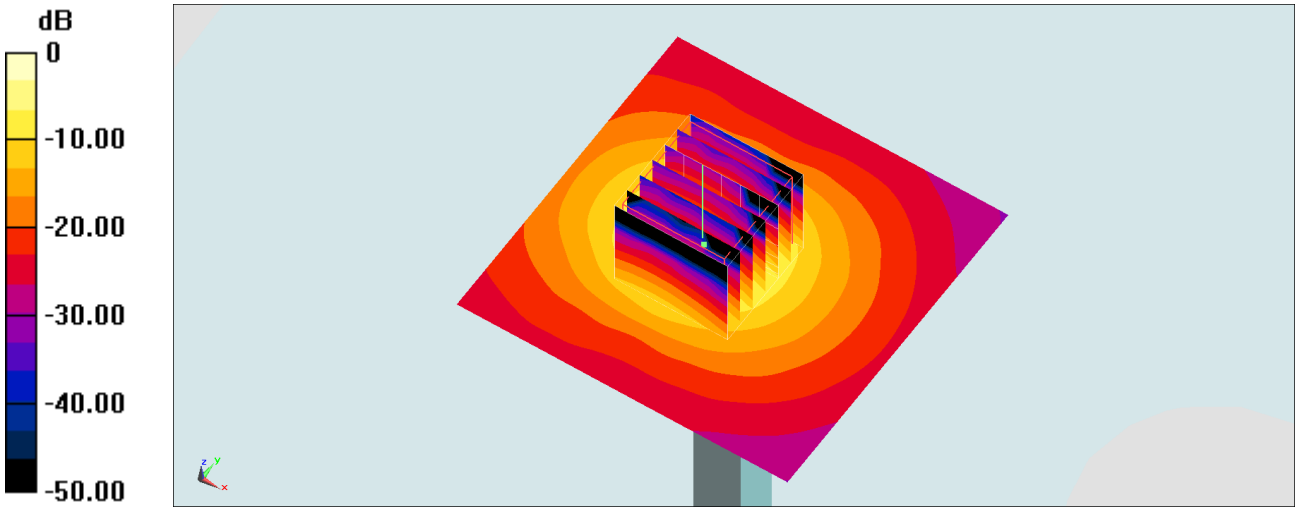

0 dB = 19.7 W/kg = 12.94 dBW/kg

System Check_Body_5250MHz

DUT: D5GHzV2-1171

Communication System: CW; Frequency: 5250 MHz;Duty Cycle: 1:1
Medium: MSL_5G_170811 Medium parameters used: f = 5250 MHz; σ = 5.398 S/m; ε_r = 47.073; ρ = 1000 kg/m^3
Ambient Temperature：23.3 ℃; Liquid Temperature：22.3 ℃

DASY5 Configuration:
- Probe: EX3DV4 - SN3925; ConvF(4.59, 4.59, 4.59); Calibrated: 2017/5/24;
- Sensor-Surface: 1.4mm (Mechanical Surface Detection)
- Electronics: DAE3 Sn495; Calibrated: 2017/5/22
- Phantom: SAM_Left; Type: QD000P40CD; Serial: TP:1815
- Measurement SW: DASY52, Version 52.8 (8);SEMCAD X Version 14.6.10 (7373)

Pin=100mW/Area Scan (71x71x1): Interpolated grid: dx=1.000 mm, dy=1.000 mm
Maximum value of SAR (interpolated) = 19.8 W/kg

Pin=100mW/Zoom Scan (7x7x7)/Cube 0: Measurement grid: dx=4mm, dy=4mm, dz=1.4mm
Reference Value = 53.32 V/m; Power Drift = 0.11 dB
Peak SAR (extrapolated) = 33.5 W/kg
SAR(1 g) = 8.23 W/kg; SAR(10 g) = 2.19 W/kg
Maximum value of SAR (measured) = 20.6 W/kg

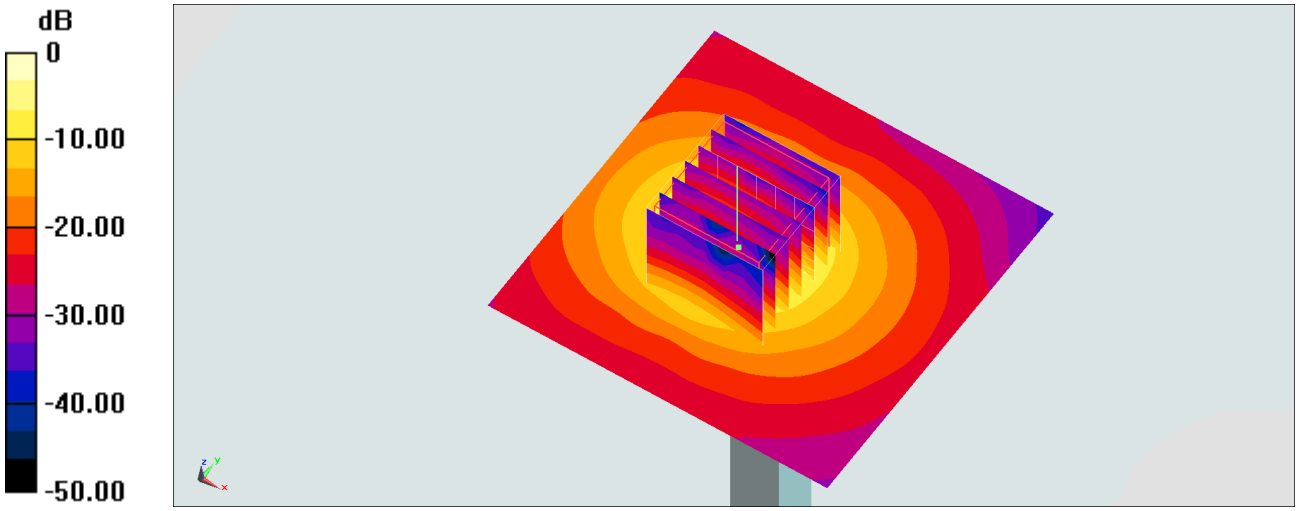

0 dB = 20.6 W/kg = 13.14 dBW/kg

System Check_Head_5600MHz

DUT: D5GHzV2-1006

Communication System: CW; Frequency: 5600 MHz;Duty Cycle: 1:1
Medium: HSL_5G_170810 Medium parameters used: f = 5600 MHz; σ = 4.834 S/m; ε_r = 35.195; ρ = 1000 kg/m^3
Ambient Temperature：23.4 ℃; Liquid Temperature：22.4 ℃

DASY5 Configuration:
- Probe: EX3DV4 - SN3925; ConvF(4.72, 4.72, 4.72); Calibrated: 2017/5/24;
- Sensor-Surface: 1.4mm (Mechanical Surface Detection)
- Electronics: DAE3 Sn495; Calibrated: 2017/5/22
- Phantom: SAM_Left; Type: QD000P40CD; Serial: TP:1815
- Measurement SW: DASY52, Version 52.8 (8);SEMCAD X Version 14.6.10 (7373)

Pin=100mW/Area Scan (71x71x1): Interpolated grid: dx=1.000 mm, dy=1.000 mm
Maximum value of SAR (interpolated) = 19.8 W/kg

Pin=100mW/Zoom Scan (7x7x7)/Cube 0: Measurement grid: dx=4mm, dy=4mm, dz=1.4mm
Reference Value = 59.45 V/m; Power Drift = 0.08 dB
Peak SAR (extrapolated) = 34.6 W/kg
SAR(1 g) = 8.01 W/kg; SAR(10 g) = 2.2 W/kg
Maximum value of SAR (measured) = 20.3 W/kg

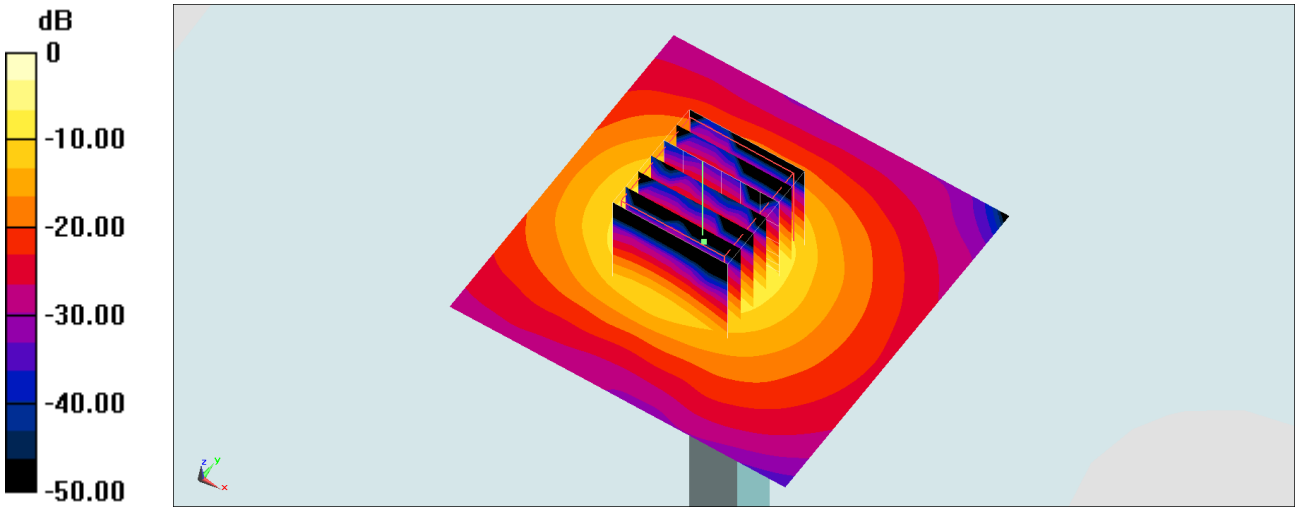

0 dB = 20.3 W/kg = 13.07 dBW/kg

System Check_Body_5600MHz

DUT: D5GHzV2-1171

Communication System: CW; Frequency: 5600 MHz;Duty Cycle: 1:1
Medium: MSL_5G_170811 Medium parameters used: f = 5600 MHz; σ = 5.853 S/m; ε_r = 46.438; ρ = 1000 kg/m^3
Ambient Temperature：23.3 ℃; Liquid Temperature：22.3 ℃

DASY5 Configuration:
- Probe: EX3DV4 - SN3925; ConvF(4.17, 4.17, 4.17); Calibrated: 2017/5/24;
- Sensor-Surface: 1.4mm (Mechanical Surface Detection)
- Electronics: DAE3 Sn495; Calibrated: 2017/5/22
- Phantom: SAM_Left; Type: QD000P40CD; Serial: TP:1815
- Measurement SW: DASY52, Version 52.8 (8);SEMCAD X Version 14.6.10 (7373)

Pin=100mW/Area Scan (71x71x1): Interpolated grid: dx=1.000 mm, dy=1.000 mm
Maximum value of SAR (interpolated) = 20.1 W/kg

Pin=100mW/Zoom Scan (7x7x7)/Cube 0: Measurement grid: dx=4mm, dy=4mm, dz=1.4mm
Reference Value = 52.26 V/m; Power Drift = 0.11 dB
Peak SAR (extrapolated) = 36.7 W/kg
SAR(1 g) = 8.22 W/kg; SAR(10 g) = 2.18 W/kg
Maximum value of SAR (measured) = 21.2 W/kg

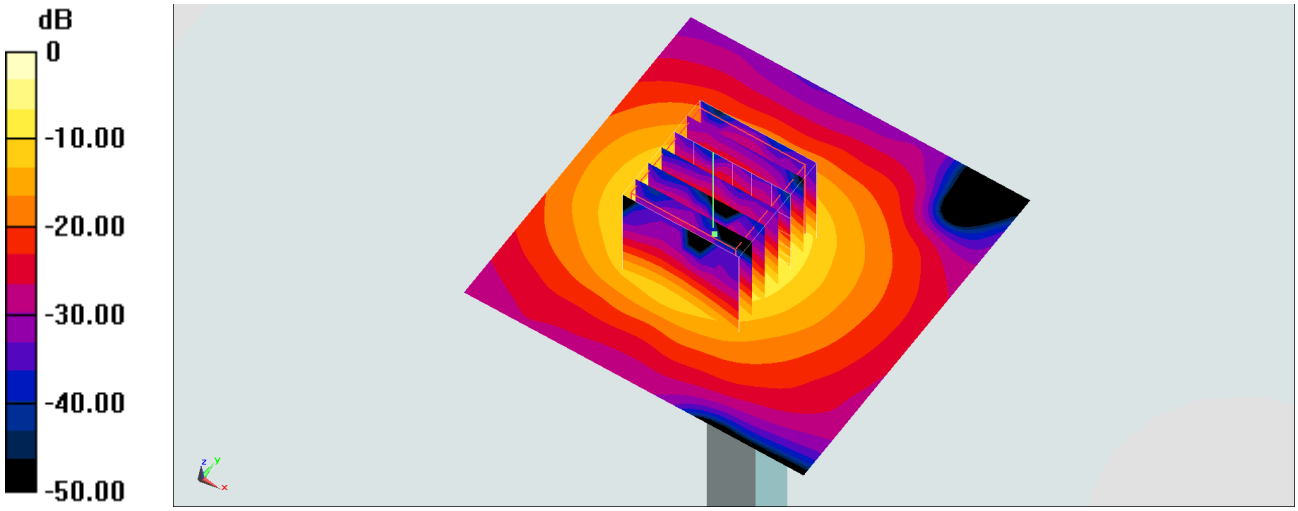

0 dB = 21.2 W/kg = 13.26 dBW/kg

System Check_Head_5750MHz

DUT: D5GHzV2-1006

Communication System: CW; Frequency: 5750 MHz;Duty Cycle: 1:1
Medium: HSL_5G_170810 Medium parameters used: f = 5750 MHz; σ = 4.989 S/m; ε_r = 35.002; ρ = 1000 kg/m^3
Ambient Temperature：23.4 ℃; Liquid Temperature：22.4 ℃

DASY5 Configuration:
- Probe: EX3DV4 - SN3925; ConvF(4.87, 4.87, 4.87); Calibrated: 2017/5/24;
- Sensor-Surface: 1.4mm (Mechanical Surface Detection)
- Electronics: DAE3 Sn495; Calibrated: 2017/5/22
- Phantom: SAM_Left; Type: QD000P40CD; Serial: TP:1815
- Measurement SW: DASY52, Version 52.8 (8);SEMCAD X Version 14.6.10 (7373)

Pin=100mW/Area Scan (71x71x1): Interpolated grid: dx=1.000 mm, dy=1.000 mm
Maximum value of SAR (interpolated) = 19.1 W/kg

Pin=100mW/Zoom Scan (7x7x7)/Cube 0: Measurement grid: dx=4mm, dy=4mm, dz=1.4mm
Reference Value = 54.07 V/m; Power Drift = 0.01 dB
Peak SAR (extrapolated) = 34.4 W/kg
SAR(1 g) = 7.58 W/kg; SAR(10 g) = 2.08 W/kg
Maximum value of SAR (measured) = 19.6 W/kg

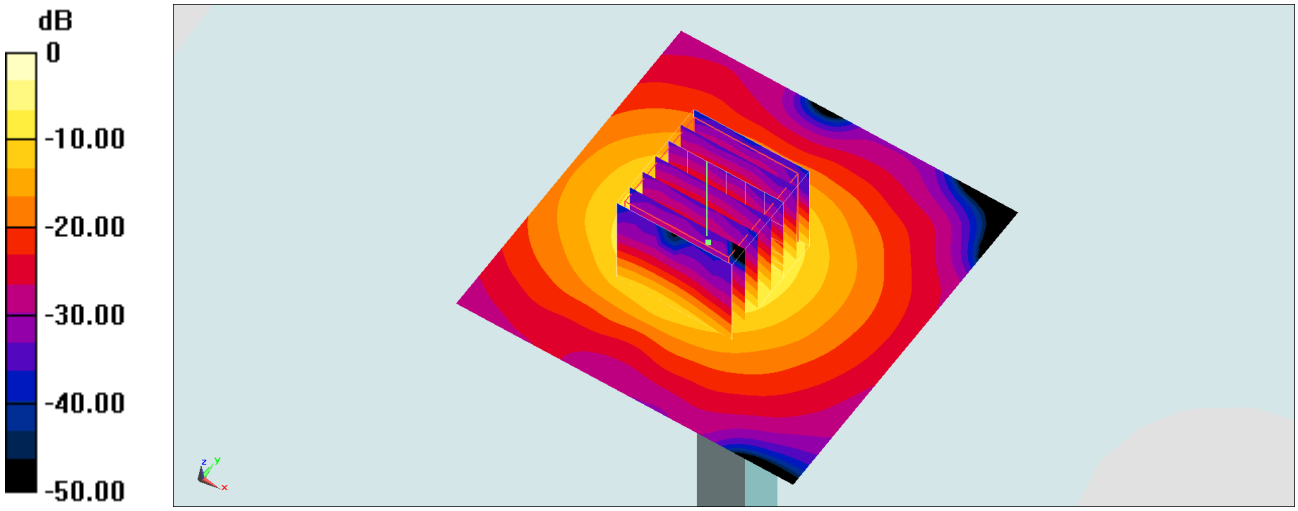

0 dB = 19.6 W/kg = 12.92 dBW/kg

System Check_Body_5750MHz

DUT: D5GHzV2-1171

Communication System: CW; Frequency: 5750 MHz;Duty Cycle: 1:1
Medium: MSL_5G_170811 Medium parameters used: f = 5750 MHz; σ = 6.066 S/m; ε_r = 46.22; ρ = 1000 kg/m^3
Ambient Temperature：23.3 ℃; Liquid Temperature：22.3 ℃

DASY5 Configuration:
- Probe: EX3DV4 - SN3925; ConvF(4.14, 4.14, 4.14); Calibrated: 2017/5/24;
- Sensor-Surface: 1.4mm (Mechanical Surface Detection)
- Electronics: DAE3 Sn495; Calibrated: 2017/5/22
- Phantom: SAM_Left; Type: QD000P40CD; Serial: TP:1815
- Measurement SW: DASY52, Version 52.8 (8);SEMCAD X Version 14.6.10 (7373)

Pin=100mW/Area Scan (71x71x1): Interpolated grid: dx=1.000 mm, dy=1.000 mm
Maximum value of SAR (interpolated) = 19.8 W/kg

Pin=100mW/Zoom Scan (7x7x7)/Cube 0: Measurement grid: dx=4mm, dy=4mm, dz=1.4mm
Reference Value = 50.87 V/m; Power Drift = 0.19 dB
Peak SAR (extrapolated) = 35.5 W/kg
SAR(1 g) = 7.99 W/kg; SAR(10 g) = 2.12 W/kg
Maximum value of SAR (measured) = 21.0 W/kg

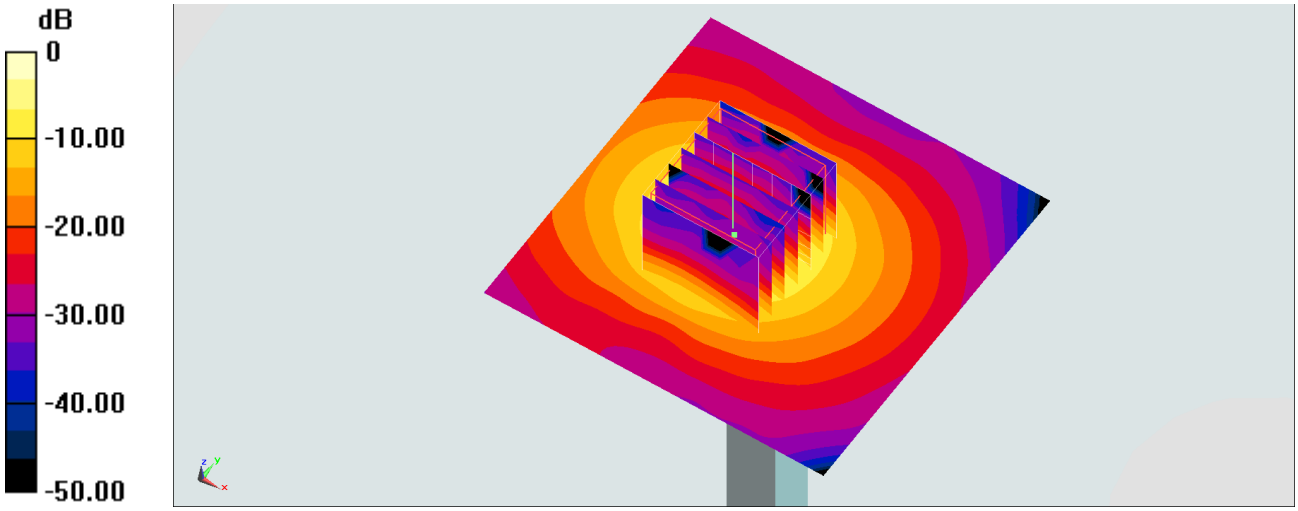

0 dB = 21.0 W/kg = 13.22 dBW/kg