Bicycle Power Meter
User Maual
Power Pro-R、Power Pro-L

Table of Contents

Important notice before riding 2
Service and technical support 2
Water resistance capability 2
Specifications 3
Download Giant Cycling Power App 3
Firmware information 3
Giant Power pro light indications 4
Charging Instructions 4
ASSEMBLY CHECKING and pairing preparation 4
Pairing Giant Power Pro 6
Calibration/zero offset 7
Maintenance and cleaning 8
Troubleshooting 9
Giant limited warranty 10
Appendix A: Basic Operation of Giant NeosTrack computer 11
Appendix b: The pairing procedures with SmartPhone App 11
Appendix c: calibration procedures with SmartPhone App 12

Important notice before riding

We strongly urge you to read the Bicycle Owner's Manual in its entirety before your first ride. Read and make sure that you understand every point in this manual, especially the "Safety" section. If you have any questions, please contact your local authorized Giant retailer.

This user manual contains important safety, performance, and service information.
Please read the user manual before starting to use your new Giant Power Pro and keep it for future reference.

For your safety, we recommend that you to focus on your surroundings while riding. Avoid staring at the computer screen. This may compromise your traffic awareness, and possibly lead to serious accident.

Service and technical support

Please ensure that the Giant Power Pro has been paired with the cycling computer and has proceeded Calibration/zero offset before use. Please refer the pairing and calibration section.

For the multi-language manuals and more information, please visit: https://www.giant-bicycles.com/support

If you encounter difficulties or are uncertain about anything mentioned in this user manual, please contact your local authorized Giant retailer.

To find one, or to learn more about Giant, go to www.giant-bicycle.com

Water resistance capability

The water resistance level of Giant Power Pro complies to the IPX7 standard which offers a waterproof level of one meter immersion.

⚠ Warning: Do NOT immerse the power meter in water for a longer time.

⚠ Warning: Do NOT use the high pressure washers to clean the power meter directly. The high pressure will cause the moisture to permeate the internals of the power meter and damage the electronic components.

Specifications

Battery	Rechargeable lithium battery
Wireless transmission	2.4GHz, ANT+™ Bluetooth® Smart (BLE 4.0)
Accuracy	±2% of measured power value
Weight	Left side: about 17g Right side: about 27g
Power measurement range	0-2400 Watts
Cadence range	20-180 RPM
Water resistance level	IPX7
Operating environment temperature range	-10°C ~ 50°C / 14°F ~ 122°F
Storage environment temperature range	-20°C ~ 70°C / -4°F ~ 158°F
Accessory	Charging cable

Download Giant Cycling Power App

The **Giant Cycling Power** App is available for Apple® iOS and Android system*. Please go to the App Store or Google Play to search **Giant Cycling Power** App and download it.

* Android system must be Android 4.4 or higher version.

Firmware information

Giant keeps developing and releasing the updated versions of firmware to provide the latest functions. The latest firmware for Giant Power Pro can be updated by using Giant Cycling Power app. For more details and information about firmware, please visit https://www.giant-bicycles.com/support.

How to upgrade the firmware by using Giant Cycling Power app:

1. Download the Giant Cycling Power app
2. Turn on the Bluetooth Smart of your Smartphone.*
3. Open the Giant Cycling Power app
4. Press to enter the parameter page
5. Press Firmware Update
6. Choose the device to update
7. Choose the updated file (zip)
8. Firmware update completed

* The device should support Bluetooth Smart (BLE 4.0).

Giant Power pro light indications

There is one indicator LED light on every Giant Power Pro. This indicator light can show various conditions. Indications of the LED light:

- Indicator light blinks green 10 times: Battery capacity is more than 30% when waking the Giant Power Pro.
- Indicator light blinks green 10 times, then blinks green once every 5 seconds: Battery capacity is lower than 30% of capacity when waking the Giant Power Pro.
- Indicator light is constantly red: While charging the Giant Power Pro. Indicator light switches off when charging is finished.
- Indicator light does not show any green or red light: The battery may be damaged or have other problems, please contact an authorized Giant retailer for assistance.

Charging Instructions

Rotate the crank arms one time in clockwise or counterclockwise direction to wake the Giant Power Pro. The indicator light blinks green light for 10 times if it is in normal condition. When the battery capacity is lower than 30%, the indicator light blinks green light once every 5 seconds. Please follow the steps for charging your device.

Step 1: Prepare the charging cable, as shown figure 1.

Step 2：Attach the charging cable to the Giant Power Pro. The indicator light will be red light constantly while charging is in progress, as shown figure 2

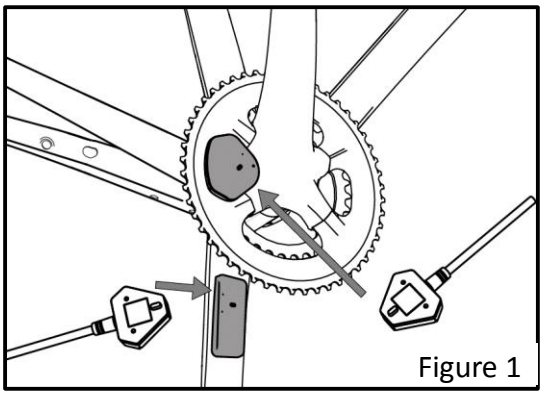
Figure 1

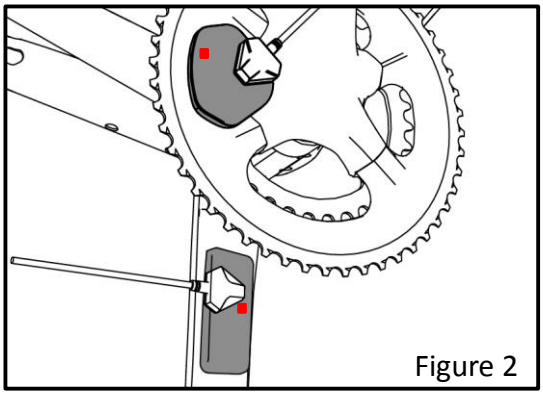
Figure 2

ASSEMBLY CHECKING and pairing preparation

⚠ Caution: Before riding on the road, please make sure and check the bottom bracket and the bolts of crank arms are tightened to the correct torque value. Please refer to the specific technical manuals from the

crank manufacturer for the correct torque values. If you encounter difficulties, please contact your local authorized Giant retailer.

Step 3: check if all bolts are tightened to the correct torque value, as shown figure 3.

3-1 The standard torque value of M5 bolts left crank arm is usually 12-14 Nm. But please refer to the specific technical manuals from the crank manufacturer to verify the correct torque value.

3-2 The M3 bolts are on the crank set for tightening the Giant Power Pro. The correct torque value is 3 Nm.

Step 4: Wake up the Giant Power Pro, as shown figure 4.

4-1 Rotate the crank arms clockwise or counterclockwise one time to wake up the Giant Power Pro. The indicator light blinks green for 10 times.

4-2 If the indicator light blinks green once every 5 seconds after waking the Giant Power Pro, the battery capacity is below 30% capacity. Please charge the battery.

Step 5: Pairing preparation.

5-1 Put the bike in horizontal position.

5-2 Keep the left crank arm in 6 o'clock position and the right crank in 12 o'clock position, as shown figure 5-2 and 5-3.

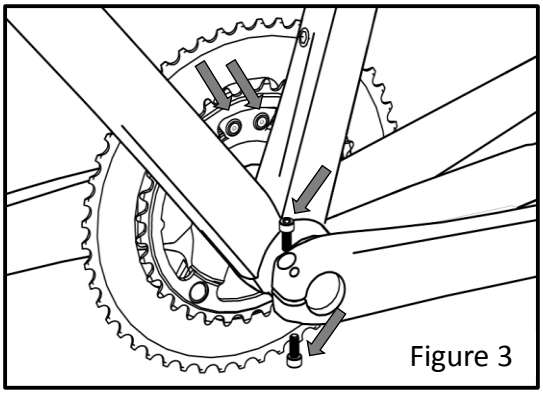

Figure 3

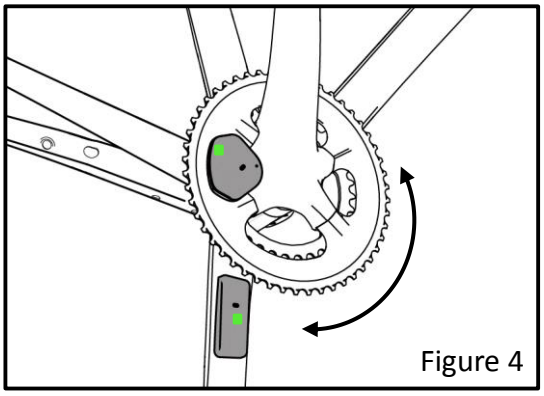

Figure 4

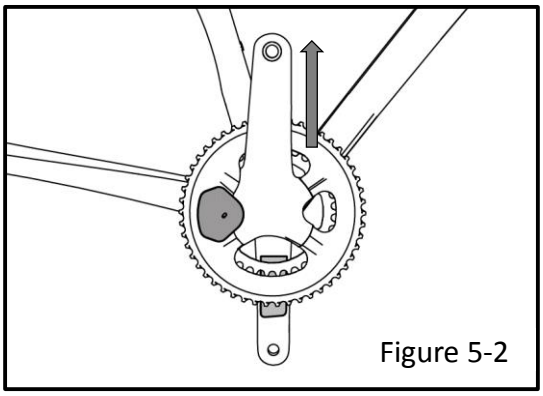

Figure 5-2

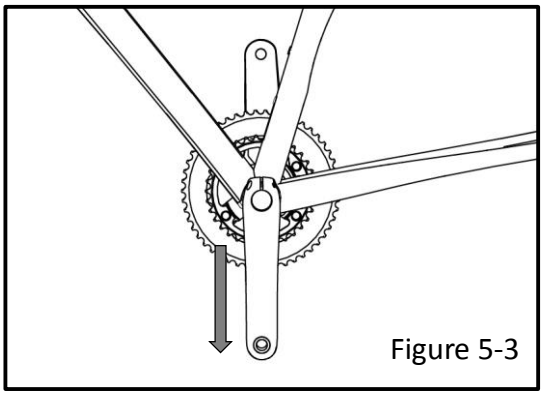

Figure 5-3

Pairing Giant Power Pro

Before pairing, please make sure the battery of Giant Power Pro is charged. Wake the Giant Power Pro by rotating the crank arms one time in clockwise or counterclockwise direction and put the bike in horizontal position as described at step 4 and 5. Please refer to the technical manuals of the cycling computer to pair it with the Giant Power Pro. The procedures may differ between various computers.

⚠ Tip: Please refer to light indication and charging instruction sections for the details.

The following procedure is an example with a Giant NeosTrack cycling computer.

⚠ Tip: For the basic operation of Giant NeosTrack please refer to appendix A.

⚠ Tip: For pairing procedures with the smartphone app please refer to appendix B.

Step 6：Hold button ▼ ≡ to enter the menu

Step 7：Press ▼ ≡ to choose “Setup”. Press ▶ LAP to enter it

Step 8：Press ▼ ≡ to choose “Bike Data”. Press ▶ LAP to enter it

Step 9：Press ▼ ≡ to choose “Bike 1”. Press ▶ LAP to enter it

Step 10：Press ▼ ≡ to choose “Sensors”. Press ▶ LAP to enter it

Step 11：Press ▼ ≡ to choose Power. Press ▶ LAP to enter it

Step 12：Press ▶ LAP to enter “More” page

Step 13：Press ▼ ≡ to choose “Rescan”

Step 14：Press ▶ LAP to start “Re-scan”

Step 15：When chosen device appears, pairing is finished.

Step 6

Step 7

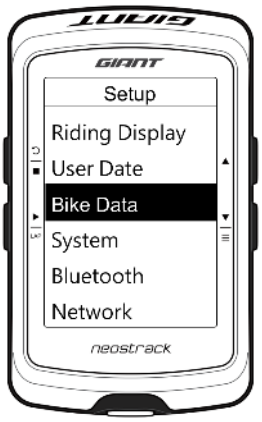

Step 8

Step 9

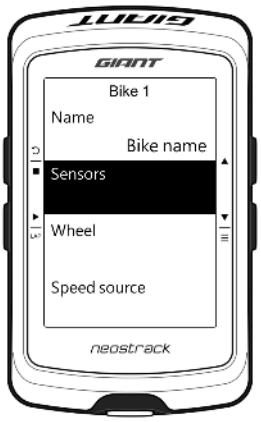

Step 10

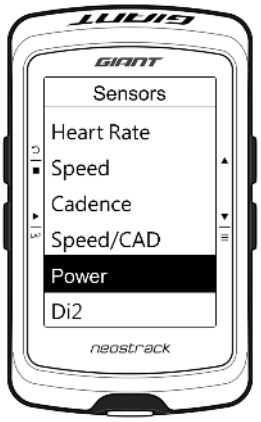

Step 11

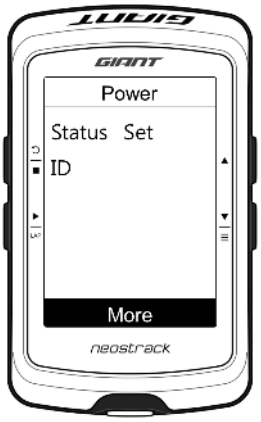

Step 12

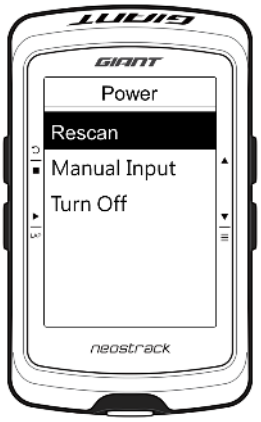

Step 13

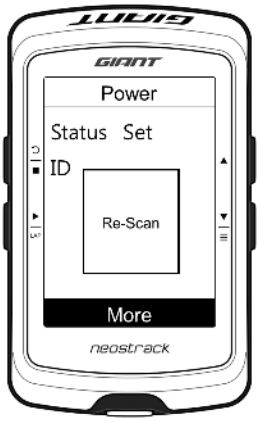

Step 14

Step 15

Calibration/zero offset

Before the calibration, please make sure the procedure of pairing with Giant Power Pro/Giant Power and computer is finished. Please refer to technical manuals of the cycling computer to calibrate the Giant Power Pro with cycling computer. The procedures may differ between various computers.

⚠ CAUTION: Please operate the calibration when assembling/disassembling the bottom bracket or cranks.

⚠ CAUTION: Please operate the calibration before every ride.

The following procedure is an example with a Giant NeosTrack cycling computer.

⚠ Tip: Calibration will only display when the power meter is activated and paired.

⚠ Tip: For the calibration procedures with smartphone app please refer to appendix C.

Step 16：After pairing successfully. Press ▶ LAP to enter the “More” page.

Step 17：Press ▼ ≡ to choose Calibrate. Press ▶ LAP to enter it

Step 18：After calibration is completed. Press LAP to save the setting.

⚠ CAUTION: The calibration is completed when the “Calibrate” value shows 0. A calibrated value of -1 indicates the calibration has failed.

Step 16

Step 17

Step 18

Maintenance and cleaning

To ensure the functionalities of Giant Power Pro and not to affect the Giant limited warranty, please make sure to comply with the WARNINGS and CAUTIONS listed below. Not complying with these recommendations may result in damage to Giant Power Pro and void your warranty.

⚠ Warning: Only to clean the covers of the Giant Power Pro. Please do NOT disassemble the Giant Power Pro this will void your warranty.

⚠ Warning: Please only clean the cover of Giant Power Pro with a clean cloth and water. Please do NOT use corrosive detergent to clean as it may damage the cover.

⚠ Warning: Do NOT use the high pressure washers to clean the power meter directly. The high pressure will cause the moisture to permeate the internals of the power meter and damage the electronic components.

⚠ Warning: Please do NOT expose the power meter to constant high temperatures.

⚠ CAUTION: The storage environment temperature range is between -20°C ~ 70°C / -4°F ~ 158°F. Damage to the electronic components may occur if the storage temperature is out of range.

⚠ CAUTION: The operating environment temperature range is between -10°C ~ 50°C / 14°F ~ 122°F. The functions may not be normal when the temperature is out of range.

Troubleshooting

If you encounter any of the following problems when using the Giant Power Pro, follow the suggestions and contact authorized Giant retailer if the problems can't be solved.

Possible problems and suggestions:

Q1: I can't charge my Giant Power Pro.

A1: Please confirm if the charging cable is connected properly to the Giant Power Pro.

A2: Please confirm if no metal part of the charging plug is oxidized or damaged.

Q2: I can't pair my Giant Power Pro with computer.

A1: Please check if the battery level of the Giant Power Pro is sufficient, if it is not enough, please charge it.

A2: Please confirm if the Giant Power Pro is awoken successfully.

A3: Please confirm if your cycling computer has a pairing function.

A4: Please confirm if your cycling computer is ANT+™ compatible.

A5: Please enter Giant Power Pro ID manually.

Q3: The power value does not shown on my computer.

A1: Please check if the battery level of the Giant Power Pro is sufficient, if it is not enough, please charge it

A2: Please confirm if the Giant Power Pro has been paired with your cycling computer.

A3: Please confirm the functions of the computer are normal.

A4: Please confirm if your computer has the functionalities to display power values.

Q4: Unusual calibration values show during calibration process.

A1: Please calibrate the Giant Power Pro again.

Q5: Unusual power values show on the cycling computer display (over high or too low value).

A1: Please confirm that the bolts of the cranks/Giant Power Pro are tightened to the correct value.

A2: Please calibrate the Giant Power Pro again

Q6: Unusual light indication

A1: The light is off: Please check if the pairing and cycling computer display are normal. If it works properly, then the LED might be damaged. Please contact an authorized Giant retailer.

A2: Abnormal blinking: please contact your local authorized Giant retailer.

If the suggestions can't solve above problems, please contact your local authorized Giant retailer.

Giant limited warranty

Giant warrants it's Giant Power Pro for a period of one (1) years from the date of purchase for the original owner only.

This warranty applies only to this product when purchased new from an Authorized Giant Dealer and assembled by that dealer at the time of purchase.

LIMITED REMEDY

Unless otherwise provided, the sole remedy under the above warranty, or any implied warranty, is limited to the replacement of defective parts with those of equal or greater value at the sole discretion of Giant. This warranty extends from the date of purchase, applies only to the original owner, and is not transferable. In no event shall Giant be responsible for any direct, incidental or consequential damages, including, without limitation, damages for personal injury, property damage, or economic losses, whether based on contract, warranty, negligence, product liability, or any other theory.

EXCLUSIONS

The above warranty, or any implied warranty, does not cover:

- Normal wear and tear on parts in situations where there are no assembly or material defects.
- Consumable components including bolts and charging cable.
- Products serviced by other than an Authorized Giant dealer.
- Modifications of the product from its original condition.
- Use of this product for abnormal, competition and/or commercial activities or for purposes other than those for which this product was designed.
- Damage caused by failing to follow the User's Manual.
- Paint, finish and decal damage resulting from taking part in competitions, jumping, downhill and/or training for such activities or events or as a result of exposing the product to, or operating the product in, severe conditions or climates.
- Labor charges for part replacement or changeover.

Except as is provided by this warranty and subject to all additional warranties, Giant and its employees and agents shall not be liable for any loss or damage whatsoever (including incidental and consequential loss or damage caused by negligence or default) arising from or concerning any Giant product.

Giant makes no other warranties, express or implied. All implied warranties, including the warranties of merchantability and fitness for a particular purpose are limited in duration to that of the express warranties stated above.

Any claim against this warranty must be made through an Authorized Giant Dealer or distributor. The purchase receipt or other proof of the date of purchase is required before a warranty claim may be processed.

Claims made outside the country of purchase may be subject to fees and additional restrictions.

Warranty duration and details may differ by country. This warranty gives you specific legal rights, and you may also have other rights which may vary from place to place. **THIS WARRANTY DOES NOT AFFECT YOUR STATUTORY RIGHTS.**

Appendix A: Basic Operation of Giant NeosTrack computer

1. BACK / STOP

• Press to return to the previous page or cancel an operation.

• When recording, press to pause recording. Press it again to stop recording.

2. OK / LAP

• In Menu, press to enter or confirm a selection.

• In free cycling, press to start recording.

• When recording, press to mark the lap.

3. ON OR OFF / BACKLIGHT

• Press to turn the device on.

• Press and hold to turn the device off.

• Press to turn on/off backlight.

4. DOWN / MENU

• In Menu, press to move down to scroll through menu options.

• In meter view, press to switch meter screen page.

• In free cycling mode, long press to return to Main Menu.

• When recording, long press to enter into Shortcut Menu.

5. UP

• In Menu, press to move up to scroll through menu options.

• In Meter view, press to switch meter screen page.

⚠ CAUTION: Please check the user manual of NeosTrack for more information.

Appendix b: The pairing procedures with SmartPhone App

1. Turn on the Bluetooth Smart function. Press to start scanning.

2. Device ID appears.

3. Choose device to pair, appears, pairing is finished.

* Please check if the smartphone supports Bluetooth Smart function (BLE 4.0)

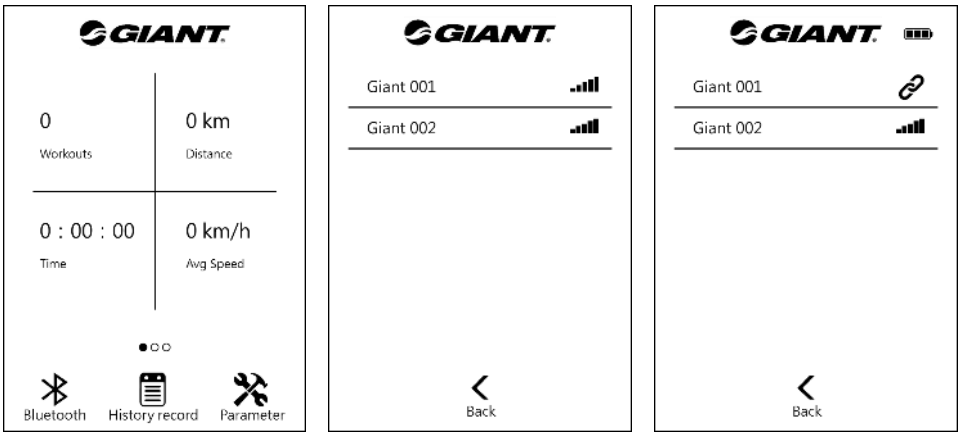

Appendix c: calibration procedures with SmartPhone App

1. Press to enter Parameter page

2. Press Calibration

3. Press Crank

4. Calibration completed

⚠ CAUTION: If you encounter difficulties, please visit: https://www.giant-bicycles.com/support

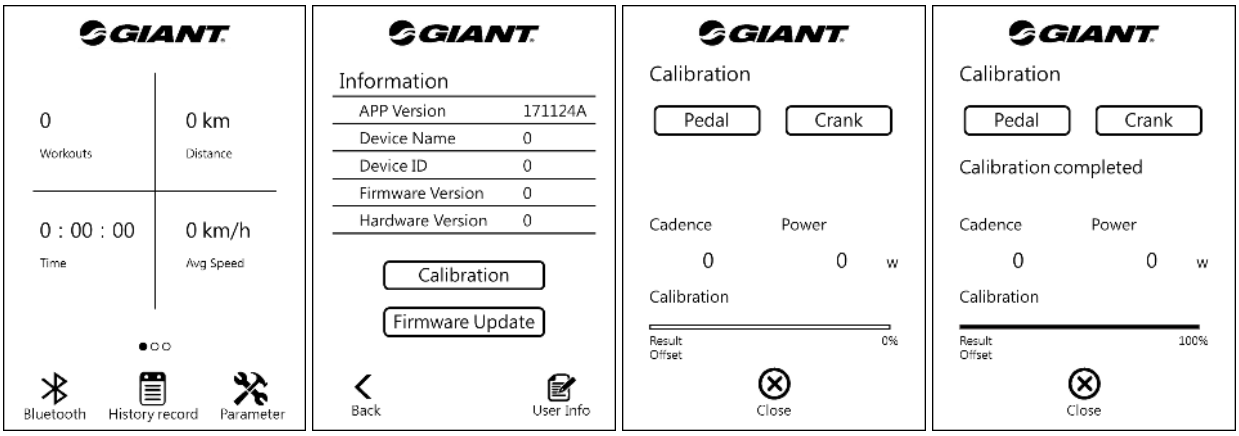

FCC Warning Statement

This device complies with Part 15 of the FCC Rules. Operation is subject to the following two conditions:

(1) this device may not cause harmful interference, and
(2) this device must accept any interference received, including interference that may cause undesired operation.

Any changes or modifications not expressly approved by the party responsible for compliance could void the authority to operate equipment.
This device and its antenna must not be co-located or operating in conjunction with any other antenna or transmitter.
End-users and installers must be provided with antenna installation instructions and transmitter operating conditions for satisfying RF exposure compliance.

This equipment has been tested and found to comply with the limits for a Class B digital device, pursuant to part 15 of the FCC Rules. These limits are designed to provide reasonable protection against harmful interference in a residential installation. This equipment generates, uses and can radiate radio frequency energy and, if not installed and used in accordance with the instructions, may cause harmful interference to radio communications. However, there is no guarantee that interference will not occur in a particular installation. If this equipment does cause harmful interference to radio or television reception, which can be determined by turning the equipment off and on, the user is encouraged to try to correct the interference by one or more of the following measures:
—Reorient or relocate the receiving antenna.
—Increase the separation between the equipment and receiver.
—Connect the equipment into an outlet on a circuit different from that to which the receiver is connected.
—Consult the dealer or an experienced radio/TV technician for help.

IC Warning Statement

This device complies with Industry Canada’s licence-exempt RSSs. Operation is subject to the following two conditions: (1) This device may not cause interference; and (2) This device must accept any interference, including interference that may cause undesired operation of the device.

Le présent appareil est conforme aux CNR d'Industrie Canada applicables aux appareils radio exempts de licence. L'exploitation est autorisée aux deux conditions suivantes : (1) l'appareil ne doit pas produire de brouillage, et (2) l'utilisateur de l'appareil doit accepter tout brouillage radioélectrique subi, même si le brouillage est susceptible d'en compromettre le fonctionnement.

依據低功率電波輻射性電機管理辦法：
•第十二條經型式認證合格之低功率射頻電機，非經許可，公司、商號或使用者均不得擅自變更頻率、加大功率或變更原設計之特性及功能。
•第十四條低功率射頻電機之使用不得影響飛航安全及干擾合法通信；經發現有干擾現象時，應立即停用，並改善至無干擾時方得繼續使用。前項合法通信，指依電信法規定作業之無線電通信。低功率射頻電機須忍受合法通信或工業、科學及醫療用電波輻射性電機設備之干擾。

NCC Warning Statement

Article 12

Without permission, any company, firm or user shall not alter the frequency, increase the power, or change the characteristics and functions of the original design of the certified lower power frequency electric machinery.

Article 14

The application of low power frequency electric machineries shall not affect the navigation safety nor interfere a legal communication, if an interference is found, the service will be suspended until improvement is made and the interference no longer exists.

当該機器には電波法に基づく、技術基準適合証明等を受けた特定無線設備を装着している。
Translation: "This equipment contains specified radio equipment that has been certified to the Technical Regulation Conformity Certification under the Radio Law."

Hereby declares that under our sole responsibility, the products Giant Power Pro, comply with the provisions of Directive 2014/53/EU.
The contents of EU declaration of conformity is available with printed paper and on Giant website: https://www.giant-bicycles.com/support.