REPORT No.: SZ26040105S02

Hearing Aid Compatibility (HAC) RF Emission Test Report

APPLICANT	:	Power Idea Technology (Shenzhen) Co., Ltd.
PRODUCT NAME	:	POC RADIO
MODEL NAME	:	PRM01G
BRAND NAME	:	RugGear
FCC ID	:	ZLE-PRM01G
STANDARD(S)	:	FCC 47 CFR Part 20 (20.19) ANSI C63.19-2019
RECEIPT DATE	:	2026-08-10
TEST DATE	:	2026-08-23
ISSUE DATE	:	2026-10-08

Edited by: Pang Siyu

Pang Siyu (Rapporteur)

Approved by: Shen Junsheng

Shen Junsheng (Supervisor)

NOTE: This document is issued by Shenzhen Morlab Communications Technology Co., the test report shall not be reproduced except in full without prior written permission of the company. The test results apply only to the particular sample(s) tested and to the specific tests carried out which is available on request for validation and information confirmed at our website.

MORLAB

Shenzhen Morlab Communications Technology Co., Ltd.
FL.1-3, Building A, FeiYang Science Park, No.8 LongChang Road,
Block67, BaoAn District, ShenZhen , GuangDong Province, P. R. China

Tel: 86-755-36698555 Fax: 86-755-36698525
Http://www.morlab.cn E-mail: service@morlab.cn

DIRECTORY

1. Statement of RF Emission 4
2. Technical Information 5
2.1. Applicant and Manufacturer Information 5
2.2. Equipment under Test (EUT) Description 5
2.3. Photographs of the EUT 7
2.4. Applied Reference Documents 7
3. Air Interface and Operating Mode 8
4. WD Emission Requirements 10
5. HAC (RF) Measurement System 11
5.1. RF Measurement Setup 11
5.2. E-Field Probe 12
5.3. Data Acquisition Electronics (DAE) 14
6. RF Emission Measurement Procedure 15
6.1. Test Procedure: Direct Measurement—Alternative 15
6.2. Test Procedure: Indirect Measurement—Preferred 16
7. Test Equipment List 18
8. System Validation 19
8.1. Test setup 19
8.2. Validation Result 20
9. Modulation Interference Factor 21
10. RF Audio Interference Power Level Evaluation 23
11. Summary Test Results 26
12. Uncertainty Assessment 27
Annex A General Information 29

Annex B Test Setup Photos 30

Annex C Plots of Performance System Check 30

Annex D Plots of RF Emission 30

Annex E DASY Calibration Certificate 30

Notes 31

Change History		
Version	**Date**	**Reason for change**
1.0	2026-10-08	First edition

Note: The latest revision of the report supersedes all previous version.

1. Statement of RF Emission

The worst RF audio interference level found during test as bellows:

Air Interface	Frequency Band	RF_{AIL} [dB(V/m)]
GSM CMRS Voice	GSM 850	28.97
	GSM 1900	28.92

Note:

1. This device is in compliance with compliance with RF_{AIL} requirements specified in FCC 47 CFR Part 20.19 and tested in accordance with the measurement methods and procedures specified in ANSI C63.19-2019 and FCC KDB publications.
2. This device was tested under the maximum power or the power of the device when held to ear for all users.
3. The declarations of EUT presented in the report are provided by applicant and/or manufacturer, and the test laboratory is not responsible for the accuracy of the information.

2. Technical Information

Note: Provide by applicant.

2.1. Applicant and Manufacturer Information

Applicant:	Power Idea Technology (Shenzhen) Co., Ltd.
Applicant Address:	B1504, 1505, 1506, 1507, Building 9, Zone 2, Shenzhen Bay Science and Technology Ecological Park, No. 3609 Baishi Road, High tech Zone Community, Yuehai Street, Nanshan District, Shenzhen City. China
Manufacturer:	Power Idea Technology (Shenzhen) Co., Ltd.
Manufacturer Address:	B1504, 1505, 1506, 1507, Building 9, Zone 2, Shenzhen Bay Science and Technology Ecological Park, No. 3609 Baishi Road, High tech Zone Community, Yuehai Street, Nanshan District, Shenzhen City. China

2.2. Equipment under Test (EUT) Description

Product Name:	POC RADIO
EUT No.:	2#
Hardware Version:	V1
Software Version:	RG380_V1.0
Frequency Bands:	GSM 850: 824 MHz ~ 849 MHz GSM 1900: 1850 MHz ~ 1910 MHz WCDMA IV: 1710 MHz ~ 1755 MHz WCDMA V: 824 MHz ~ 849 MHz LTE Band 2: 1850 MHz ~ 1910 MHz LTE Band 4: 1710 MHz ~ 1755 MHz LTE Band 5: 824 MHz ~ 849 MHz LTE Band 7: 2500 MHz ~ 2570 MHz LTE Band 12: 699 MHz ~ 716 MHz LTE Band 13: 777 MHz ~ 787 MHz LTE Band 14: 788 MHz ~ 798 MHz LTE Band 17: 704 MHz ~ 716 MHz LTE Band 18: 815 MHz ~ 830 MHz LTE Band 19: 830 MHz ~ 845 MHz LTE Band 25: 1850 MHz ~1915 MHz LTE Band 26: 814 MHz ~ 849 MHz LTE Band 29 (RX): 717 MHz ~ 728 MHz

	LTE Band 30: 2305 MHz ~ 2315 MHz LTE Band 38: 2570 MHz ~ 2620 MHz LTE Band 40: 2305 MHz ~ 2315 MHz, 2350 MHz ~ 2360 MHz LTE Band 41: 2496 MHz ~ 2690 MHz LTE Band 66: 1710 MHz ~ 1780 MHz LTE Band 71: 663 MHz ~ 698 MHz WLAN 2.4GHz: 2412 MHz ~ 2472 MHz WLAN 5.2GHz: 5180 MHz ~ 5240 MHz WLAN 5.3GHz: 5260 MHz ~ 5320 MHz WLAN 5.5GHz: 5500 MHz ~ 5720 MHz WLAN 5.8GHz: 5745 MHz ~ 5825 MHz Bluetooth: 2402 MHz ~ 2480 MHz NFC: 13.56 MHz
Modulation Mode:	GSM/GPRS: GMSK EDGE: 8PSK WCDMA: QPSK, 16QAM LTE: QPSK, 16QAM, 64QAM 802.11b: DSSS 802.11a/g: OFDM 802.11n-HT20/40: OFDM 802.11ac-VHT20/40/80: OFDM BR+EDR: GFSK (1Mbps), π/4-DQPSK (2Mbps), 8-DPSK (3Mbps) Bluetooth LE: GFSK (1Mbps, 2Mbps) NFC: ASK
Multi-slot Class:	GPRS: Multi-slot Class 12 EDGE: Multi-slot Class 12
Operation Class:	Class B
VoLTE Mode:	Support
VoWi-Fi Mode:	Support
Hotspot Mode:	Support
Antenna Type:	WWAN: Fixed External WLAN: PIFA Antenna Bluetooth: PIFA Antenna NFC: Loop Antenna
SIM Cards Description:	GSM+WCDMA+LTE

Note: For more detailed description, please refer to specification or user manual supplied by the applicant and/or manufacturer.

2.3. Photographs of the EUT

Note: Please refer to the External Photos for the Photos of the EUT

2.4. Applied Reference Documents

Leading reference documents for testing:

Identity	Document Title	Remark
ANSI C63.19-2019	American National Standard Methods of Measurement of Compatibility between Wireless Communications Devices and Hearing Aids	/
FCC 47 CFR Part 20 (20.19)	Hearing aid-compatible mobile handsets	/
KDB 285076 D01v06r04	HAC Guidance	/
KDB 285076 D03v01r06	HAC FAQ	/
Note: Any additions, deviation, or exclusions from the method shall be noted in the “Remark”.		

3. Air Interface and Operating Mode

Air Interface	Band	Transport Type	ANSI C63.19 Tested	Simultaneous Transmitter	Name of Voice Service	Power State for HAC Compliance
GSM	GSM 850	VO	Yes	WLAN, BT	CMRS Voice	Full
	GSM 1900					Full
	EDGE 850	DT	No	WLAN, BT	N/A	Full
	EDGE 1900					Full
WCDMA (UMTS)	Band IV	VO	No	WLAN, BT	CMRS Voice	Full
	Band V					Full
	HSPA	DT	No	WLAN, BT	N/A	Full
FDD-LTE & TDD-LTE	Band 2	VD	No	WLAN, BT	VoLTE	Full
	Band 4					Full
	Band 5					Full
	Band 7					Full
	Band 12					Full
	Band 13					Full
	Band 14					Full
	Band 17					Full
	Band 18					Full
	Band 19					Full
	Band 25					Full
	Band 26					Full
	Band 30					Full
	Band 38					Full
	Band 40					Full
	Band 41					Full
	Band 66					Full
	Band 71					Full
WiFi	2450	VD	No	GSM, UMTS, LTE	VoWiFi	Full
	5200 (U-NII-1)					Full
	5300 (U-NII-2A)					Full
	5500 (U-NII-2C)					Full
	5800 (U-NII-3)					Full
BT	2450	DT	No	GSM, UMTS, LTE	N/A	N/A

Note:

1) Air Interface/Band MHz: List of all air interfaces and bands supported by the handset.

2) Type: For each air interface, indicate the type of voice transport mode:
   i. VO = legacy Cellular Voice Service, from ANSI C63.19-2019;
   ii. DT = Digital Transport only (no voice) (e.g., Bluetooth), not subject to C63.19 HAC testing.
   iii. VD = IP Voice Service over Digital Transport.
3) Simultaneous Transmitter: Indicate any air interface/bands that operate in simultaneous or concurrent service transmission mode.
4) Name of Voice Service: See Q4 in 285076 D03 HAC FAQ for further clarification.
5) Set device to highest transmit power in a held to the ear mode.
6) The RF Emission for UMTS, FDD & TDD LTE and WLAN measurement is not required and the exemption was evaluated in section 10.

4. WD Emission Requirements

According to ANSI C63.19-2019, the WD's conducted power must be at or below either the stated RF_{AIPL} (Table 4.1) or the stated peak power level (Table 4.2), or the average near-field emissions over the measurement area must be at or below the stated RF_{AIL} (Table 4.3), or the stated peak field strength (Table 4.4). The WD may demonstrate compliance by meeting any of these four requirements, but it must do so in each of its operating bands at its established worst-case normal speech-mode operating condition.

Table 4.1—Wireless device RF audio interference power level

Frequency Range (MHz)	RF_{AIPL} (dBm)
<960	29
960–2000	26
>2000	25

Table 4.2—Wireless device RF peak power level

Frequency Range (MHz)	$RF_{Peak\ Power}$ (dBm)
<960	35
960–2000	32
>2000	31

Table 4.3—Wireless device RF audio interference level

Frequency Range (MHz)	RF_{AIL} [dB(V/m)]
<960	39
960–2000	36
>2000	35

Table 4.4—Wireless device RF peak near-field level

Frequency Range (MHz)	RF_{Peak} [dB(V/m)]
<960	45
960–2000	42
>2000	41

5. HAC (RF) Measurement System

5.1. RF Measurement Setup

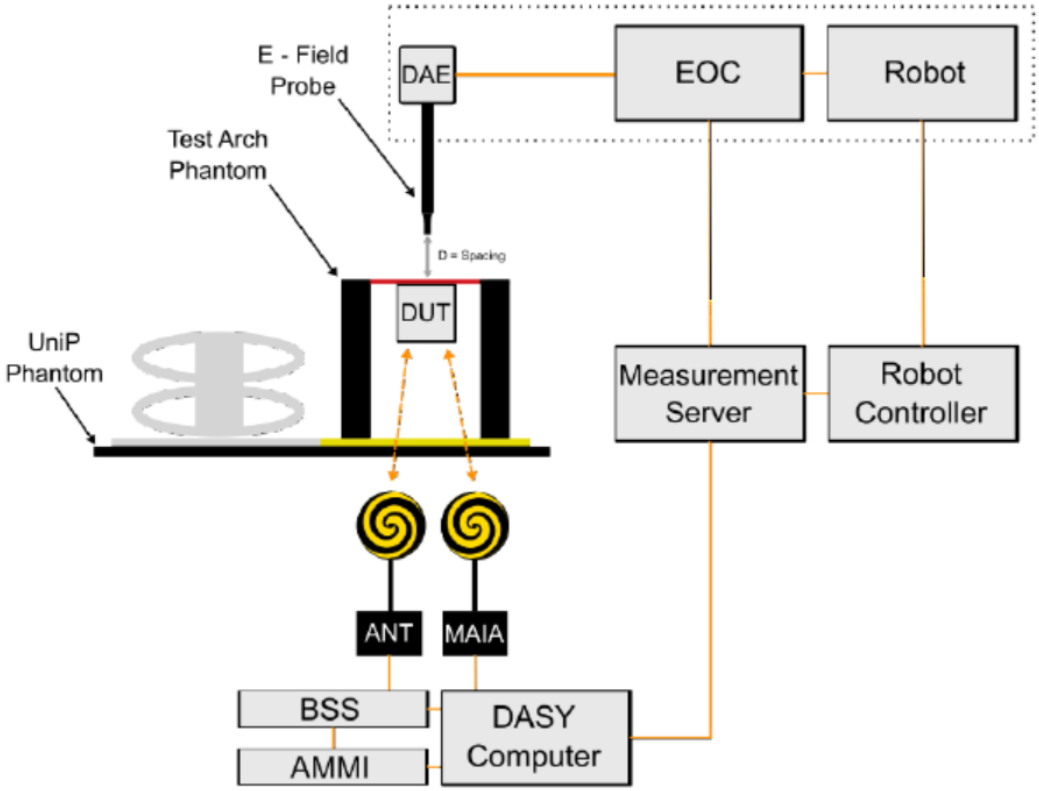

Fig 5.1 Typical DASY6/8 setup for HAC RF signal test

5.2. E-Field Probe

The RF measurement is conducted with the dosimetric probe (manufactured by SPEAG). The probe is specially designed and calibrated for use with high permittivity. The dosimetric probe has special calibration at different frequency. This probe has a built in optical surface detection system to prevent from collision with phantom.

E-Field Probe Specification

<ER3DV6>

Construction	One dipole parallel, two dipoles normal to probe axis Built-in shielding against static charges	
Calibration	In air from 100 MHz to 3.0 GHz (Absolute accuracy ±6.0%, k=2)	
Frequency	10 MHz to 6 GHz; Linearity: ± 0.2 dB	
Directivity	± 0.2 dB in HSL (rotation around probe axis) ± 0.4 dB in HSL (rotation normal to probe axis)	
Dynamic Range	2 V/m to 1000 V/m (M3 or better device readings fall well below diode compression point)	
Linearity	± 0.2 dB	
Dimensions	Overall length: 330 mm (Tip: 16 mm) Tip diameter: 8 mm (Body: 12 mm) Distance from probe tip to dipole centers: 2.5 mm	**Fig 5.2 Photo of ER3DV6**
Probe Tip Description: HAC field measurements take place in the close near field with high gradients. Increasing the measuring distance from the source will generally decrease the measured field values (in case of the validation dipole approx. 10%per mm).		

<Voltage to E-field Conversion>

The measured voltage is first linearized to a quantity proportional to the square of the E-field using the (a, b, c, d) set of parameters specific to the communication system and sensor:

$$V_{\mathrm{compi}} = U_i + U_i^2 \cdot \frac{10^{\frac{d}{10}}}{dcp_i}$$

where V_{compi} = compensated voltage of channel i (μV) (i = x,y,z)
U_i = input voltage of channel i (μV) (i = x,y,z)
d = PMR factor d (dB) (Probe parameter)
d_{cpi} = diode compression point of channel i (μV) (Probe parameter, i = x,y,z)

$$V_{\mathrm{compi}_{\mathrm{dB}\sqrt{\mu\mathrm{V}}}} = 10 \cdot \log_{10}\left(V_{\mathrm{compi}}\right)$$

$$\mathrm{corr}_i = a_i \cdot e^{-\left(\frac{V_{\mathrm{compi}_{\mathrm{dB}\sqrt{\mu\mathrm{V}}}} - b_i}{c_i}\right)^2}$$

where corr_i = correction factor of channel i (dB) (i = x,y,z)
$V_{compi_{dB\sqrt{\mu V}}}$ = compensated voltage of channel i (dB$\sqrt{\mu V}$) (i = x,y,z)
a_i = PMR factor a of channel i (dB) (Probe parameter, i = x,y,z)
b_i = PMR factor b of channel i (dB$\sqrt{\mu V}$) (Probe parameter, i = x,y,z)
c_i = PMR factor c of channel i (Probe parameter, i = x,y,z).

The voltage $V_{idB\sqrt{\mu V}}$ is the linearized voltage in dB$\sqrt{\mu V}$

$$V_{idB\sqrt{\mu V}} = V_{compi_{dB\sqrt{\mu V}}} - \mathrm{corr}_i$$

Where $V_{i_{dB\sqrt{\mu V}}}$ = linearized voltage of channel i (dB$\sqrt{\mu V}$) (i = x,y,z)
$V_{compi_{dB\sqrt{\mu V}}}$ = compensated voltage of channel I (dB$\sqrt{\mu V}$) (i = x,y,z)
corr_i = correction factor of channel i (dB) (i = x,y,z)

Finally, the linearized voltage is converted in μV:

$$V_i = 10^{\frac{V_{i_{\mathrm{dB}\sqrt{\mu\mathrm{V}}}}}{10}}$$

The E-field data for each channel are calculated using the linearized voltage:

$$E\text{-field probes:} \qquad E_i = \sqrt{\frac{V_i}{\mathrm{Norm}_i \cdot \mathrm{ConvF}}}$$

Where V_i = linearized voltage of channel i (i = x,y,z)
Norm_i = sensor sensitivity (μV/(V/m)2) of channel i (i = x,y,z)
ConvF = sensitivity enhancement in solution
E_i = electric field strength of channel i in V/m.

The RMS value of the field components gives the total field strength (Hermitian magnitude):

$$E_{\mathrm{tot}} = \sqrt{E_x^2 + E_y^2 + E_z^2}.$$

<Averaged E-field Calculation>

The averaged E-field is defined by

$$E_{avg} = \frac{1}{n} \cdot \sum_{i=1}^{n} E_i$$

where n = the number of measurement grid point

E_i = the E-field measured at point i.

<RFail Calculation>

The RFail is finally computed with

$$\textbf{RFail [dB(V=m)]} = 20 \cdot \log_{10}(E_{avg}) + \textbf{MIF}$$

Where RFail = the Radio Frequency Audio Interference Level in dB(V/m)

E_{avg} = the averaged E-field in (V/m) calculated

MIF = the Modulation Interference Factor in dB.

5.3. Data Acquisition Electronics (DAE)

The data acquisition electronics (DAE) consists of a highly sensitive electrometer-grade preamplifier with auto-zeroing, a channel and gain-switching multiplexer, a fast 16 bits AD-converter and a command decoder and control logic unit. AD-converter and a command decoder and control logic unit. Transmission to the measurement server is accomplished through an optical downlink for data and status information as well as an optical uplink for commands and the clock.

The input impedance of the DAE is 200 MOhm; the inputs are symmetrical and floating. Common mode rejection is above 80 dB.

Fig 5.3 Photo of DAE

6. RF Emission Measurement Procedure

6.1. Test Procedure: Direct Measurement—Alternative

The following methods are example step-by-step test procedures. Other comparable procedures may be used. Either manual or automatic test procedures may be used. The automated test procedure is preferred.

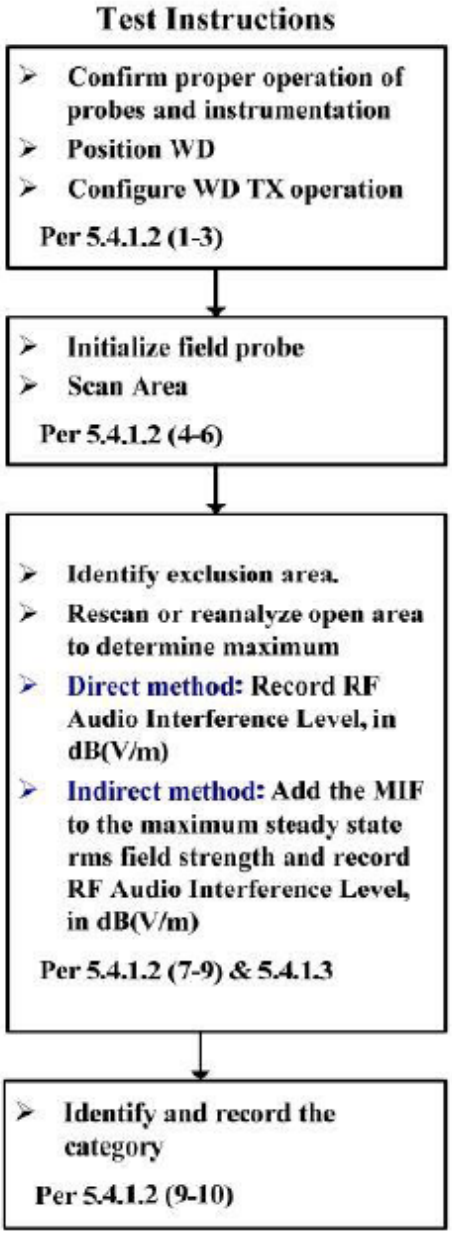

Fig 6.1 WD near-field emission scan flowchart

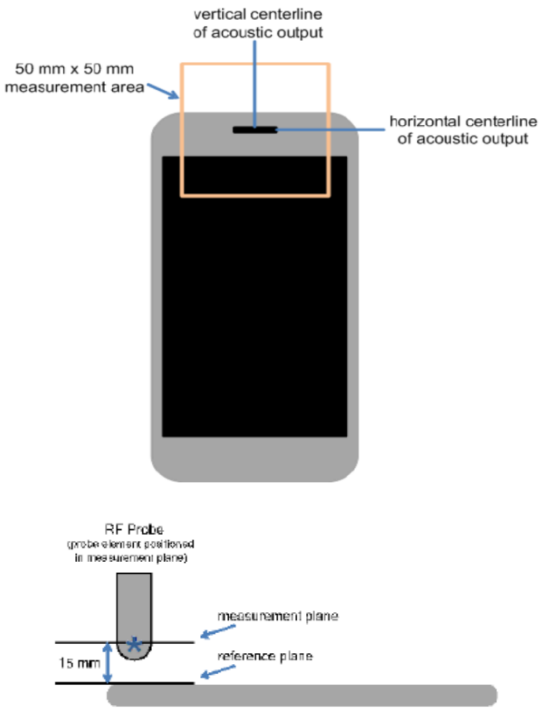

Fig 6.2 WD measurement and reference planes for RF emission measurements

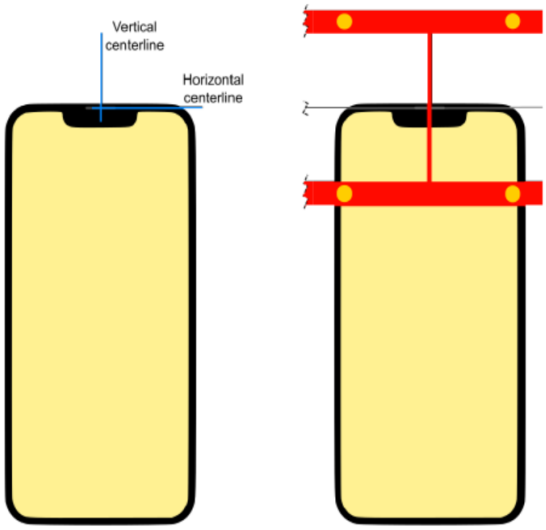

Fig 6.3 Device Under Test Positioning under the Test Arch

6.2. Test Procedure: Indirect Measurement—Preferred

1. Confirm the proper operation of the field probe, probe measurement system, and other instrumentation and the positioning system.
2. Position the WD in its intended test position. A gauge block, depicted in A.1.2, can simplify this positioning.
3. Set the WD to transmit a fixed and repeatable combination of signal power and modulation characteristic that is representative of the worst case (highest interference potential) encountered in normal use. Transiently occurring start-up, changeover, or termination conditions, or other operations likely to occur less than 1% of the time during normal operation, may be excluded from consideration. Transiently occurring start-up, changeover, or termination conditions, or other operations likely to occur less than 1% of the time during normal operation, may be excluded from consideration.
4. The measurement area shall be centered on the acoustic output or the T-Coil mode measurement reference point, as appropriate. Locate the field probe at the initial test position in the 50 mm by 50 mm measurement area, which is contained in the measurement plane, described in 4.5.2 and illustrated in Figure A.1. If the field alignment method is used, align the probe for maximum field reception.

5. Record the reading at the output of the measurement system.
6. Scan the entire 50 mm by 50 mm measurement area in equally spaced step sizes and record the reading at each measurement point. The step size shall meet the specification for step size in 4.5.3.
7. Calculate the average of the measurements taken in Step 6.
8. Convert the average value found in Step g) to RF audio interference level, in volts per meter, by taking the square root of the reading and then dividing it by the measurement system transfer function, as established in 4.5.3.2.1 pre-test procedure. Convert the result to dB(V/m) by taking the base-10 logarithm and multiplying it by 20. Expressed as a formula:

$$\textbf{RF audio interference level in db (V/m)} = 20 \cdot \log (R_{ave}{}^{1/2} / TF)$$

Where R_{ave} is the average reading

9. Comparing this RF audio interference level to the limits in 4.7 of ANSI C63.19-2019 and record the result.

7. Test Equipment List

Manufacturer	Name of Equipment	Type/Model	Serial No./ SW Version	Calibration	
				Last Cal.	Due Date
SPEAG	DOSIMETRIC ASSESSMENT SYSTEM Software	cDASY6 HAC	V1.2	NCR	NCR
SPEAG	Isotropic E-Field Probe	ER3DV6	2434	2025.11.18	2026.11.17
SPEAG	Audio Holder	N/A	1094	NCR	NCR
SPEAG	835MHz Calibration Dipole	CD835V3	1113	2025.11.18	2028.11.17
SPEAG	1880MHz Calibration Dipole	CD1880V3	1111	2025.11.18	2028.11.17
SPEAG	Data Acquisition Electronics	DAE4	1643	2026.03.16	2027.03.15
SPEAG	Test Arch Phantom	N/A	N/A	NCR	NCR
SPEAG	Phone Positioner	N/A	N/A	NCR	NCR
R&S	Power Senor	NRP8S	103215	2025.12.24	2026.12.23
Agilent	Power Meter	E4416A	MY45102093	2025.09.02	2026.09.01
R&S	Power Sensor	NRP8S	103240	2025.12.24	2026.12.23
Anritsu	Power Meter	E4418B	GB43318055	2026.04.28	2027.04.27
Agilent	Signal Generator	N5182B	MY53050509	2025.09.02	2026.09.01
R&S	Base Station	CMU200	107082	2026.04.28	2027.04.27
R&S	Base Station	CMW500	165755	2025.12.23	2026.12.22
PASTERNACK	Dual Directional Coupler	PE2214-10	N/A	NA	NA
Woken	Attenuator	WK0602-XX	N/A	NA	NA
Mini-Circuits	Power Amplifier	ZHL-42W+	608501717	NCR	NCR

8. System Validation

According to ANSI C63.19, before hearing aid testing commences, the experimental setup shall be validated. Sub clauses 6.3.1through 6.3.5 include a set of pretest procedures designed to validate the experimental setup to ensure the accuracy of the results. To verify that the hearing aid performs per the manufacturer's specifications, 6.3.5 advises that the hearing aid be pretested per ANSI S3.22.

8.1. Test setup

1. In the simplified setup for system evaluation, the EUT is replaced by a calibrated dipole and the power source is replaced by a continuous wave which comes from a signal generator.
2. Position the E-field probe at a 15 mm distance from the top surface of the dipole, which is also fixed in an appropriate fixture.
3. Make sure that the desired measuring channel of the probe is aligned for maximum reception of the E-field generated by the dipole. This may be accomplished by rotating the probe until the maximum value is located. The E-field probe shall have been calibrated over the frequency range to be measured using standard calibration techniques.
4. Adjust the power level (20dBm→100mW) of the signal generator at the initial starting frequency such that the desired E-field strength at the 15 mm distance from the tip of the dipole is achieved. Setting the field strength to be in the range of category M2 is advised.
5. Step the frequency in increments of ≤1%, adjusting the power fed into the dipole such that the desired E-field strength is maintained.

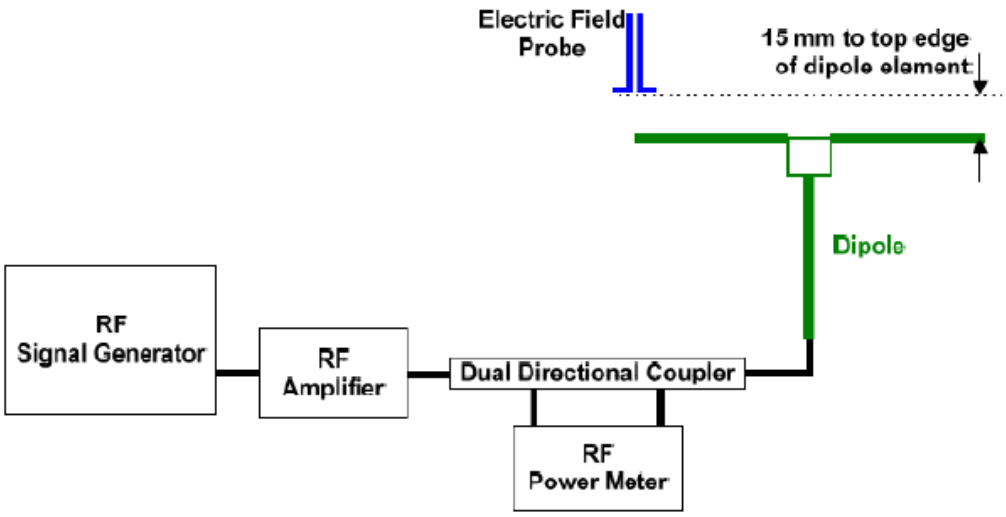

Fig 8.1 WD dipole calibration procedure

8.2. Validation Result

After testing, record the frequency and signal generator setting at each frequency for use during the actual immunity test. Comparing to the original E-field value provided by SPEAG, the verification data should be within its specification of 25 %. Table 6.1 shows the target value and measured value. The table below indicates the system performance check can meet the variation criterion and the plots can be referred to appendix A of this report. Deviation = ((Maximum E-field Value) - (Target value)) / (Target value) * 100%

Frequency (MHz)	Input Power (mW)	Target Value (V/m)	E_{max} (V/m)	Deviation (%)	Limit (%)	Date
835	100	111.3	98.4	-11.59	±12.8	2026.08.23
1880	100	87	88.9	2.18	±12.8	2026.08.23

9. Modulation Interference Factor

For any specific fixed and repeatable modulated signal, a Modulation Interference Factor (MIF, expressed in decibels) may be developed that relates its interference potential to its steady state rms signal level or average power level. This factor is a function only of the audio frequency amplitude modulation characteristics of the signal and is the same for field strength or conducted power measurements. It is important to emphasize that the MIF is valid only for a specific repeatable audio frequency amplitude modulation characteristic. Any change in modulation characteristic requires determination and application of a new MIF.

MIF may be determined using a radiated RF field, a conducted RF signal, or, in a preliminary stage, a mathematical analysis of a modeled RF signal.

1. Verify the slope accuracy and dynamic range capability over the desired operating frequency band of a fast probe or sensor, square-law detector, as specified in D.3, and weighting system as specified in D.4 and D.5. For the probe and instrumentation included in the measurement of MIF, additional calibration and application of calibration factors are not required.
2. Using RF illumination, or conducted coupling, apply the specific modulated signal in question to the measurement system at a level within its confirmed operating dynamic range.
3. Measure the steady-state rms level at the output of the fast probe or sensor.
4. Measure the steady-state average level at the weighting output.
5. Without changing the square-law detector or weighting system, and using RF illumination, or conducted coupling, substitute for the specific modulated signal a 1 kHz, 80% amplitude-modulated carrier at the same frequency and adjust its strength until the level at the weighting output equals the Step d) measurement.
6. Without changing the carrier level from Step e), remove the 1 kHz modulation and again measure the steady-state rms level indicated at the output of the fast probe or sensor.
7. The MIF for the specific modulation characteristic is given by the ratio of the Step 6 measurement to the Step 3 measurement, expressed in decibels (20*log(step 6/step 3).

In practice, Step 5 and Step 6 need not be repeated for each MIF determination if the relationship between the two measurements has been pre-established for the measurement system over the operating frequency and dynamic ranges. In such cases, only the modulation characteristic being tested needs to be available during WD testing.

MIF values applied in this test report were provided by the HAC equipment provider of SPEAG, and the worst values for all air interface are listed below to be determine the Low-power Exemption.

UID	Communication System Name	MIF(dB)
10021	GSM-FDD (TDMA, GMSK)	3.63
10025	EDGE-FDD (TDMA, 8PSK, TN 0)	3.75
10460	UMTS-FDD (WCDMA, AMR)	-25.43
10225	UMTS-FDD (HSPA+)	-20.39
10081	CDMA2000 (1xRTT, RC3 Full Rate)	-19.71
10295	CDMA2000 (1xRTT, RC1 SO3, 1/8th Rate 25 fr.)	3.26
10403	CDMA2000 (1xEV-DO)	-17.67
10169	LTE-FDD (SC-FDMA,1RB, 20MHz, QPSK)	-15.63
10170	LTE-FDD (SC-FDMA,1RB, 20MHz, 16-QAM)	-9.76
10179	LTE-FDD (SC-FDMA,1RB, 20MHz, 64-QAM)	-9.93
10181	LTE-FDD (SC-FDMA,1RB,15MHz, QPSK)	-15.63
10175	LTE-FDD (SC-FDMA,1RB, 10MHz, QPSK)	-15.63
10177	LTE-FDD (SC-FDMA,1RB, 5MHz, QPSK)	-15.63
10184	LTE-FDD (SC-FDMA,1RB, 3MHz, QPSK)	-15.62
10187	LTE-FDD (SC-FDMA,1RB, 1.4MHz, QPSK)	-15.62
10172	LTE-TDD (SC-FDMA, 1 RB, 20 MHz, QPSK)	-1.62
10173	LTE-TDD (SC-FDMA, 1 RB, 20 MHz, 16-QAM)	-1.44
10174	LTE-TDD (SC-FDMA, 1 RB, 20 MHz, 64-QAM)	-1.54
10240	LTE-TDD (SC-FDMA, 1 RB, 15 MHz, QPSK)	-1.62
10237	LTE-TDD (SC-FDMA, 1 RB, 10 MHz, QPSK)	-1.62
10234	LTE-TDD (SC-FDMA, 1 RB, 5 MHz, QPSK)	-1.62
10231	LTE-TDD (SC-FDMA, 1 RB, 3 MHz, QPSK)	-1.62
10228	LTE-TDD (SC-FDMA, 1 RB, 1.4 MHz, QPSK)	-1.62
10931	NR-FDD (DFT-s-OFDM,1RB, 20MHz, QPSK)	-15.06
10930	NR-FDD (DFT-s-OFDM,1RB, 15MHz, QPSK)	-15.06
10929	NR-FDD (DFT-s-OFDM,1RB, 10MHz, QPSK)	-15.06
10928	NR-FDD (DFT-s-OFDM,1RB, 5MHz, QPSK)	-15.06
10866	NR-TDD (DFT-s-OFDM,1RB, 100MHz, QPSK)	-1.64
10906	NR-TDD (DFT-s-OFDM,1RB, 80MHz, QPSK)	-16.69
10905	NR-TDD (DFT-s-OFDM,1RB, 60MHz, QPSK)	-16.68
10903	NR-TDD (DFT-s-OFDM,1RB, 40MHz, QPSK)	-16.68
10902	NR-TDD (DFT-s-OFDM,1RB, 30MHz, QPSK)	-16.68
10900	NR-TDD (DFT-s-OFDM,1RB, 20MHz, QPSK)	-16.68
10061	IEEE 802.11b WiFi 2.4 GHz (DSSS, 11 Mbps)	-2.02
10077	IEEE 802.11g WiFi 2.4 GHz (DSSS/OFDM, 54 Mbps)	0.12
10427	IEEE 802.11n (HT Greeneld, 150 Mbps, 64-QAM)	-13.44

10069	IEEE 802.11a/h WiFi 5 GHz (OFDM, 54 Mbps)	-3.15
10607	IEEE 802.11ac WiFi (20MHz, MCS0, 99pc duty cycle)	-5.6
10616	IEEE 802.11ac WiFi (40MHz, MCS0, 99pc duty cycle)	-5.57
10626	IEEE 802.11ac WiFi (80MHz, MCS0, 99pc duty cycle)	-5.64
10636	IEEE 802.11ac WiFi (160MHz, MCS0, 99pc duty cycle)	-5.56
10671	IEEE 802.11ax WiFi (20MHz, MCS0, 99pc duty cycle)	-5.66
10707	IEEE 802.11ax WiFi (40MHz, MCS0, 99pc duty cycle)	-6.01
10731	IEEE 802.11ax WiFi (80MHz, MCS0, 99pc duty cycle)	-6.04
10743	IEEE 802.11ax WiFi (160MHz, MCS0, 99pc duty cycle)	-6.6
11026	IEEE 802.11be WiFi (20/40/80/160320MHz, MCS0, 99pc duty cycle)	-28.73

10. RF Audio Interference Power Level Evaluation

➢ **General Guidance**

1. The maximum conducted power including tune-up limit of each air interface will be used to plusing the MIF and evaluating whether it complies with the RF_{AIPL} requirements defined in ANSI C63.19-2019 section 4.7 Table 4.1, or the RF Emission should be measured and the test results complies with RF audio interference level requirements of Table 4.3.
2. The EDGE mode is not required since it is less than the GSM Voice mode for the conducted power including tune-up limit.
3. When the results that the maximum conducted power each air interface plus MIF complies with the RF_{AIPL} requirements, means it complies with the WD emission requirements per ANSI C63.19-2019.
4. The maximum power level with the receiver active of higher frequency bands for FDD-LTE and TDD-LTE will be used to determining the RF_{AIPL}.
5. The maximum power including tune-up limit of each air interface was recorded in SAR report SZ26040105S01.

➢ **RF_{AIPL} Evaluation**

<WWAN>

Air Interface	Max Tune-up Limit (dBm)	Worst Case MIF (dBm)	Power + MIF (dBm)	Lowest RF_{AIPL} (dBm)	C63.19 Test Required
GSM 850	34.00	3.63	37.63	29	Yes
EDGE 850	28.00	3.75	31.75	29	Yes
GSM 1900	31.00	3.63	34.63	26	Yes
EDGE 1900	26.50	3.75	30.25	26	Yes
UMTS Band IV	24.00	-25.43	-1.43	26	No
UMTS Band V	24.00	-25.43	-1.43	26	No
UMTS-HSPA	23.00	-20.39	2.61	26	No
LTE Band 2	24.00	-9.76	14.24	26	No
LTE Band 4	24.00	-9.76	14.24	26	No
LTE Band 5	24.00	-9.76	14.24	29	No
LTE Band 7	24.00	-9.76	14.24	25	No
LTE Band 12	24.00	-9.76	14.24	29	No
LTE Band 13	23.50	-9.76	13.74	29	No
LTE Band 14	23.50	-9.76	13.74	29	No
LTE Band 17	24.00	-9.76	14.24	29	No
LTE Band 18	23.50	-9.76	13.74	29	No
LTE Band 19	23.50	-9.76	13.74	29	No
LTE Band 25	24.00	-9.76	14.24	26	No
LTE Band 26	24.00	-9.76	14.24	29	No
LTE Band 30	23.00	-9.76	13.24	25	No
LTE Band 38	24.50	-1.62	22.88	25	No
LTE Band 40	23.00	-1.62	21.38	25	No
LTE Band 41	24.00	-1.62	22.38	25	No
LTE Band 66	24.00	-9.76	14.24	26	No
LTE Band 71	23.50	-9.76	13.74	29	No

<WLAN>

Air Interface	Max Tune-up Limit (dBm)	Worst Case MIF (dBm)	Power + MIF (dBm)	Lowest RF_{AIPL} (dBm)	C63.19 Test Required
WLAN 2.4G 11b	17.00	-2.02	14.98	25	No
WLAN 2.4G 11g	16.50	0.12	16.62	25	No
WLAN 2.4G 11n20	16.50	-13.44	3.06	25	No
WLAN 5.2G 11a	14.50	-3.15	11.35	25	No
WLAN 5.2G n20	14.50	-13.44	1.06	25	No
WLAN 5.2G n40	14.50	-13.44	1.06	25	No
WLAN 5.2G ac20	14.50	-5.57	8.93	25	No
WLAN 5.2G ac40	14.50	-5.57	8.93	25	No
WLAN 5.2G ac80	14.50	-5.57	8.93	25	No
WLAN 5.3G 11a	14.50	-3.15	11.35	25	No
WLAN 5.3G n20	14.50	-13.44	1.06	25	No
WLAN 5.3G n40	14.50	-13.44	1.06	25	No
WLAN 5.3G ac20	14.50	-5.57	8.93	25	No
WLAN 5.3G ac40	14.50	-5.57	8.93	25	No
WLAN 5.3G ac80	14.50	-5.57	8.93	25	No
WLAN 5.5G 11a	15.50	-3.15	12.35	25	No
WLAN 5.5G n20	15.50	-13.44	2.06	25	No
WLAN 5.5G n40	16.00	-13.44	2.56	25	No
WLAN 5.5G ac20	15.50	-5.57	9.93	25	No
WLAN 5.5G ac40	16.00	-5.57	10.43	25	No
WLAN 5.5G ac80	15.50	-5.57	9.93	25	No
WLAN 5.8G 11a	16.00	-3.15	12.85	25	No
WLAN 5.8G n20	15.50	-13.44	2.06	25	No
WLAN 5.8G n40	16.00	-13.44	2.56	25	No
WLAN 5.8G ac20	15.50	-5.57	9.93	25	No
WLAN 5.8G ac40	16.00	-5.57	10.43	25	No
WLAN 5.8G ac80	15.50	-5.57	9.93	25	No

11. Summary Test Results

➢ **General Guidance**

This device was tested under the maximum volume, backlight off and mute on.

➢ **RF_{AIL} Test Results**

Plot No.	Air Interface	Mode	Channel	RF_{AIL} (dB V/m)	Verdict
1#	GSM850	GSM Voice	128	28.97	PASS
2#	GSM850	GSM Voice	189	28.95	PASS
3#	GSM850	GSM Voice	251	28.94	PASS
4#	GSM1900	GSM Voice	512	28.92	PASS
5#	GSM1900	GSM Voice	661	28.92	PASS
6#	GSM1900	GSM Voice	810	28.93	PASS

12. Uncertainty Assessment

The component of uncertainly may generally be categorized according to the methods used to evaluate them. The evaluation of uncertainly by the statistical analysis of a series of observations is termed a Type evaluation of uncertainty. The evaluation of uncertainty by means other than the statistical analysis of a series of observation is termed a Type B evaluation of uncertainty. Each component of uncertainty, however evaluated, is represented by an estimated standard deviation, termed standard uncertainty, which is determined by the positive square root of the estimated variance.

The combined standard uncertainty of the measurement result represents the estimated standard deviation of the result. It is obtained by combining the individual standard uncertainties of both Type A and Type B evaluation using the usual “root-sum-squares” (RSS) methods of combining standard deviations by taking the positive square root of the estimated variances. Expanded uncertainty is a measure of uncertainty that defines an interval about the measurement result within which the measured value is confidently believed tolie. It is obtained by multiplying the combined standard uncertainty by a coverage factor. For purpose of this document, a coverage factor two is used, which corresponds to confidence interval of about 95 %.

HAC Uncertainty Budget For ANSI C63.19-2019 600 - 6000 MHz, Scanning distance 15mm					
Error Description	**Uncertainty Value (±%)**	**Probe Distance**	**Div.**	**(Ci) Eav**	**Standard Uncertainty (Eav) (±%)**
Measurement System					
Probe Calibration	5.1	N	1	1	5.1
Axial Isotropy	4.7	R	1.732	1	2.7
Sensor Displacement	7.2	R	1.732	0.5	2.1
Boundary Effects	2.4	R	1.732	1	1.4
Phantom Boundary Effect	7.2	R	1.732	1	4.2
Probe Linearity	4.7	R	1.732	1	2.7
Scaling to Peak Power with MIF	10.0	R	1.732	1	5.8
System Detection Limit	1.0	R	1.732	1	0.6
Readout Electronics	0.3	N	1	1	0.3
Response Time	0.8	R	1.732	0	0
Integration Time	0.8	R	1.732	0	0
RF Ambient Conditions	2.6	R	1.732	1	1.7
RF Reflections	3.0	R	1.732	1	6.9
RF Reflections	12.2	R	1.732	1	6.9
Probe Positioner	1.2	R	1.732	1	0.7
Probe Positioning	3.0	R	1.732	1	1.7
Extrapolation and Interpolation	1.0	R	1.732	1	0.6
Test Sample Related					
Device Positioning Vertical	4.7	R	1.732	1	2.7
Device Positioning Lateral	1.0	R	1.732	1	0.6
Device Holder and Phantom	2.4	R	1.732	1	1.4
Power Drift	5.0	R	1.732	1	2.9
Phantom and Setup Related					
Phantom Thickness	2.4	R			
Combined Std. Uncertainty					13.2
Expanded Std. Uncertainty on Power					26.4
Expanded Std. Uncertainty on Field					13.2

Annex A General Information

1. Identification of the Responsible Testing Laboratory

Laboratory Name:	Shenzhen Morlab Communications Technology Co., Ltd.
Laboratory Address:	FL.1-3, Building A, FeiYang Science Park, No.8 LongChang Road, Block 67, BaoAn District, ShenZhen, GuangDong Province, P. R. China
Telephone:	+86 755 36698555
Facsimile:	+86 755 36698525

2. Identification of the Responsible Testing Location

Name:	Shenzhen Morlab Communications Technology Co., Ltd.
Address:	FL.1-3, Building A, FeiYang Science Park, No.8 LongChang Road, Block 67, BaoAn District, ShenZhen, GuangDong Province, P. R. China

3. Facilities and Accreditations

The FCC designation number is CN1192, the test firm registration number is 226174.

Annex B Test Setup Photos

The annex B will be submitted separately.

Annex C Plots of Performance System Check

The annex C will be submitted separately.

Annex D Plots of RF Emission

The annex D will be submitted separately.

Annex E DASY Calibration Certificate

The annex E will be submitted separately.

Notes

1. The report shall have report stamp or our company stamp.
2. The report shall be invalid without all the signatures of the editor and approver.
3. The report shall not be changed.
4. Any objections must be raised to Morlab within 15 days since the date when the report is received. It will not be taken into consideration beyond this limit.
5. Conformity declaration:
   ☑ Morlab issues a statement of conformity based on the corresponding standards（default）
   ☐ Morlab issues a statement of conformity based on the applicant requirement
6. Use of uncertainty of measurement for decisions on conformity (decision rule):
   No decision rule is specified by the testing standard, when comparing the measurement result with the applicable limit according to the specification in that standard. The decisions on conformity are made without applying the measurement uncertainty (“simple acceptance” decision rule).
7. “*”This item is not accredited in A2LA scope.

****** END OF MAIN REPORT ******