FCC RADIO TEST REPORT
FCC ID: ZLE-RG725

Product： LTE SMARTPHONE

Trade Mark： RugGear

Model Name： RG725

Family Model： N/A

Report No.： S18112300402E004

Prepared for

Power Idea Technology (Shenzhen) Co., Ltd.

4th Floor, A Section ,Languang Science&technology Xinxi RD,
Hi-Tech Industrial Park North, Nanshan ShenZhen, 518057 China

Prepared by

Shenzhen NTEK Testing Technology Co., Ltd.
1/F, Building E, Fenda Science Park, Sanwei Community,
Xixiang Street Bao'an District, Shenzhen 518126 P.R. China
Tel.: +86-755-6115 6588
Fax.: +86-755-6115 6599
Website:http://www.ntek.org.cn

TEST RESULT CERTIFICATION

Applicant's name ..... : Power Idea Technology (Shenzhen) Co., Ltd.

Address ..... : 4th Floor, A Section ,Languang Science&technology Xinxi RD, Hi-Tech Industrial Park North, Nanshan ShenZhen, 518057 China

Manufacturer's Name ..... : RUGGEAR LIMITED

Address ..... : RM1301,13/F WING TUCK COMM CTR 177-183 WING LOK ST SHEUNG WAN HONG KONG

Product description

Product name..... : LTE SMARTPHONE

Model and/or type reference : RG725

Family Model..... : N/A

Standards ..... : FCC Part15.407

Test procedure ..... ANSI C63.10-2013 and KDB 789033 D02 General UNII Test Procedures New Rules v01r01

FCC KDB 905462 D02 UNII DFS Compliance Procedures New Rules v02

This device described above has been tested by NTEK, and the test results show that the equipment under test (EUT) is in compliance with the FCC requirements/ the Industry Canada requirements.. And it is applicable only to the tested sample identified in the report.

This report shall not be reproduced except in full, without the written approval of NTEK, this document may be altered or revised by NTEK, personnel only, and shall be noted in the revision of the document.

Date of Test .....

Date (s) of performance of tests..... 24 Nov. 2018 ~ 29 Dec. 2018

Date of Issue..... 29 Dec. 2018

Test Result..... **Pass**

Testing Engineer : Loren · Luo

(Loren Luo)

Technical Manager : Jason chen

(Jason Chen)

Authorized Signatory : Sam . Chen

(Sam Chen)

Table of Contents

	Page
1 . SUMMARY OF TEST RESULTS	7
1.1 FACILITIES AND ACCREDITATIONS	8
1.2 MEASUREMENT UNCERTAINTY	8
2 . GENERAL INFORMATION	9
2.1 GENERAL DESCRIPTION OF EUT	9
2.2 DESCRIPTION OF TEST MODES	11
2.3 BLOCK DIGRAM SHOWING THE CONFIGURATION OF SYSTEM TESTED	12
2.4 DESCRIPTION OF SUPPORT UNITS(CONDUCTED MODE)	13
2.5 EQUIPMENTS LIST FOR ALL TEST ITEMS	14
3 . EMC EMISSION TEST	16
3.1 CONDUCTED EMISSION MEASUREMENT	16
3.1.1 APPLICABLE STANDARD	16
3.1.2 CONFORMANCE LIMIT	16
3.1.3 TEST CONFIGURATION	16
3.1.4 TEST PROCEDURE	16
3.2 RADIATED EMISSION MEASUREMENT	21
3.2.1 APPLICABLE STANDARD	21
3.2.2 CONFORMANCE LIMIT	21
3.2.3 MEASURING INSTRUMENTS	21
3.2.4 TEST CONFIGURATION	22
3.2.5 TEST PROCEDURE	23
3.2.6 TEST RESULTS (9KHZ – 30 MHZ)	24
3.2.7 TEST RESULTS (30MHZ – 1GHZ)	25
3.2.8 TEST RESULTS (1GHZ-26GHZ)	33
3.2.9 TEST RESULTS (26GHZ-40GHZ)	37
4 . POWER SPECTRAL DENSITY TEST	45
4.1 APPLIED PROCEDURES / LIMIT	45
4.2 TEST PROCEDURE	46
4.3 DEVIATION FROM STANDARD	46
4.4 TEST SETUP	46
4.5 EUT OPERATION CONDITIONS	46
4.6 TEST RESULTS	47
5 . 26DB & 99% EMISSION BANDWIDTH	63
5.1 APPLIED PROCEDURES / LIMIT	63
5.2 TEST PROCEDURE	63
5.3 EUT OPERATION CONDITIONS	64
5.4 TEST RESULTS	65

Table of Contents

	Page
6 . MINIMUM 6 DB BANDWIDTH	81
6.1 APPLIED PROCEDURES / LIMIT	81
6.2 TEST PROCEDURE	81
6.3 DEVIATION FROM STANDARD	81
6.4 TEST SETUP	81
6.5 EUT OPERATION CONDITIONS	81
6.6 TEST RESULTS	82
7 . MAXIMUM CONDUCTED OUTPUT POWER	86
7.1 PPLIED PROCEDURES / LIMIT	86
7.2 TEST PROCEDURE	86
7.3 DEVIATION FROM STANDARD	88
7.4 TEST SETUP	88
7.5 EUT OPERATION CONDITIONS	88
7.6 TEST RESULTS	89
8 . OUT OF BAND EMISSIONS	93
8.1 APPLICABLE STANDARD	93
8.2 TEST PROCEDURE	93
8.3 DEVIATION FROM STANDARD	93
8.4 TEST SETUP	93
8.5 EUT OPERATION CONDITIONS	94
8.6 TEST RESULTS	95
9.SPURIOUS RF CONDUCTED EMISSIONS	104
9.1CONFORMANCE LIMIT	104
9.2MEASURING INSTRUMENTS	104
9.3TEST SETUP	104
9.4TEST PROCEDURE	104
9.5TEST RESULTS	104
10. FREQUENCY STABILITY MEASUREMENT	117
10.1 LIMIT	117
10.2 TEST PROCEDURES	117
10.3 TEST SETUP LAYOUT	117
10.4 EUT OPERATION DURING TEST	117
10.5 TEST RESULTS	118
11. DYNAMIC FREQUENCY SELECTION(DFS)	130
11.1 APPLICABILITY OF DFS REQUIREMENTS	130
11.2 INTERFERENCE THRESHOLD VALUES, MASTER OR CLIENT INCORPORATING IN-SERVICE MONITORING	130

Table of Contents

	Page
11.3 DFS RESPONSE REQUIREMENT VALUES	131
11.4 SHORT PULSE RADAR TEST WAVEFORMS	131
11.5 CALIBRATION SETUP AND DFS TEST RESULTS	132
11.6 CONDUCTED CALIBRATION SETUP	132
11.7 RADAR WAVEFORM CALIBRATION RESULT	133
11.8 IN-SERVICE MONITORING: CHANNEL MOVE TIME, CHANNEL CLOSING TRANSMISSION TIME AND NON-OCCUPANCY PERIOD	135
11.9 RESULT OF CHANNEL MOVE TIME, CHANNEL CLOSING TRANSMISSION TIME AND NON-OCCUPANCY PERIOD FOR CLIENT BEACON TEST	136
12. ANTENNA REQUIREMENT	138
12.1 STANDARD REQUIREMENT	138
12.2 EUT ANTENNA	138

Revision History

Report No.	Version	Description	Issued Date
S18112300402E004	Rev.01	Initial issue of report	Dec 29, 2018

1. SUMMARY OF TEST RESULTS

Test procedures according to the technical standards:

FCC Part15 (15.407) , Subpart E			
Standard Section	Test Item	Judgment	Remark
15.207	AC Power Line Conducted Emissions	PASS	
15.209(a), 15.407 (b)(1) 15.407 (b)(2) 15.407 (b)(3) 15.407 (b)(4) 15.407 (b)(6)	Spurious Radiated Emissions	PASS	
15.407 (a) 15.1049	26 dB and 99% Emission Bandwidth	PASS	
15.407(e)	Minimum 6 dB bandwidth	PASS	
15.407 (a)	Maximum Conducted Output Power	PASS	
2.1051, 15.407 (b)(1) 15.407 (b)(2) 15.407 (b)(3) 15.407 (b)(4)	Band Edge	PASS	
15.407 (a)	Power Spectral Density	PASS	
2.1051, 15.407(b)	Spurious Emissions at Antenna Terminals	PASS	
15.407(h)	Dynamic Frequency Selection(DFS)	PASS	Subcontract test(note 2)
15.203	Antenna Requirement	PASS	

NOTE:

(1)" N/A" denotes test is not applicable in this Test Report

(2) Subcontracted laboratory information:
Firm Name:
Shenzhen Huatongwei International Inspection Co., Ltd.
Designation Number:CN1181
Test Firm Registration Number: 762235
A2LA Certificate Registration Number : 3902.01

1.1 FACILITIES AND ACCREDITATIONS

FACILITIES

All measurement facilities used to collect the measurement data are located at

1/F, Building E, Fenda Science Park, Sanwei Community, Xixiang Street, Bao'an District, Shenzhen 518126 P.R. China.

The sites are constructed in conformance with the requirements of ANSI C63.7, ANSI C63.10 and CISPR Publication 22.

LABORATORY ACCREDITATIONS AND LISTINGS

Site Description

CNAS-Lab.	:	The Laboratory has been assessed and proved to be in compliance with CNAS-CL01:2006 (identical to ISO/IEC 17025:2005) The Certificate Registration Number is L5516.
IC-Registration		The Certificate Registration Number is 9270A-1.
FCC- Accredited		Test Firm Registration Number: 463705. Designation Number: CN1184
A2LA-Lab.		The Certificate Registration Number is 4298.01 This laboratory is accredited in accordance with the recognized International Standard ISO/IEC 17025:2005 General requirements for the competence of testing and calibration laboratories. This accreditation demonstrates technical competence for a defined scope and the operation of a laboratory quality management system (refer to joint ISO-ILAC-IAF Communiqué dated 8 January 2009).
Name of Firm	:	Shenzhen NTEK Testing Technology Co., Ltd.
Site Location	:	1/F, Building E, Fenda Science Park, Sanwei Community, Xixiang Street, Bao'an District, Shenzhen 518126 P.R. China.

1.2 MEASUREMENT UNCERTAINTY

The reported uncertainty of measurement y±U, where expended uncertainty U is based on a standard uncertainty multiplied by a coverage factor of k=2, providing a level of confidence of approximately 95 %.

No.	Item	Uncertainty
1	Conducted Emission Test	±2.80dB
2	RF power, conducted	±0.16dB
3	Spurious emissions, conducted	±0.21dB
4	All emissions, radiated(30MHz~1GHz)	±2.64dB
5	All emissions, radiated(1GHz~6GHz)	±2.40dB
6	All emissions, radiated(＞6GHz)	±2.52dB
7	Temperature	±0.5°C
8	Humidity	±2%

2. GENERAL INFORMATION

2.1 GENERAL DESCRIPTION OF EUT

Equipment	LTE SMARTPHONE
Trade Mark	N/A
Model Name	RG725
FCC ID	ZLE-RG725
Product Description	

Mode Supported	☒802.11a ☒802.11n(HT20) ☒802.11n(HT40) ☒802.11ac(HT20) ☒802.11ac(HT40) ☐802.11ac(HT80)
Data Rate	802.11a: 6,9,12,18,24,36,48,54Mbps; 802.11n(HT20/HT40):MCS0-MCS15; 802.11ac(VHT20): NSS1, MCS0-MCS8 802.11ac(VHT40):NSS1, MCS0-MCS9
Modulation	OFDM with BPSK/QPSK/16QAM/64QAM
Operating Frequency Range	☒ U-NII-1: 5150 MHz ~5250MHz ☒ U-NII-2A: 5250MHz~5350MHz ☒ U-NII-2C: 5470MHz~5725MHz ☒ U-NII-3: 5725 MHz ~5850 MHz
Function:	☐Outdoor AP ☐Indoor AP ☐Fixed P2P ☒Client
DFS type:	☐master devices ☐Slave devices with radar detection ☒Slave devices without radar detection
Antenna Type	PIFA Antenna
Antenna Gain	0.8

Based on the application, features, or specification exhibited in User's Manual, More details of EUT technical specification, please refer to the User's Manual.

Ratings	DC 3.8V from battery or DC 5V from USB Port.
Adapter	Model: HKC0115021-2D Input: 100-240V~50/60Hz 0.5A Output: 5V⎓2A
Battery	DC 3.8V/5000mAh
Connecting I/O Port(s)	Please refer to the User's Manual
HW Version	S955_V1.3
SW Version	N/A

Note:

1. For a more detailed features description, please refer to the manufacturer's specifications or the User's Manual.
2. Frequency and Channel list:

Band	20MHz		40MHz		80MHz	
	Channel	Frequency	Channel	Frequency	Channel	Frequency
U-NII-1	36	5180 MHz	38	5190 MHz	N/A	N/A
	40	5200 MHz	46	5230 MHz		
	44	5220 MHz				
	48	5240 MHz				
U-NII-2A	52	5260 MHz	54	5270 MHz		
	56	5280 MHz	62	5310 MHz		
	60	5300 MHz				
	64	5320 MHz				
U-NII-2C	100	5500 MHz	102	5510 MHz		
	104	5520 MHz	110	5550 MHz		
	108	5540 MHz	118	5590 MHz		
	112	5560 MHz	126	5630 MHz		
	116	5580 MHz	134	5670 MHz		
	120	5600 MHz				
	124	5620 MHz				
	128	5640 MHz				
	132	5660 MHz				
	140	5700 MHz				
U-NII-3	149	5745 MHz	151	5755 MHz		
	153	5765 MHz	159	5795 MHz		
	157	5785 MHz				
	161	5805 MHz				
	165	5825 MHz				

Tx Antenna

Antenna	Antenna Type	Antenna Gain(dBi)
		5.0G
A(main)	PIFA	0.8

2.2 DESCRIPTION OF TEST MODES

To investigate the maximum EMI emission characteristics generates from EUT, the test system was pre-scanning tested base on the consideration of following EUT operation mode or test configuration mode which possible have effect on EMI emission level. Each of these EUT operation mode(s) or test configuration mode(s) mentioned above was evaluated respectively.

Test Items	Mode	Data Rate	Channel	Ant
AC Power Line Conducted Emissions	Normal Link	-	-	-
Maximum Conducted Output Power	11a/n(20)/ac(20)	6 Mbps/ MCS0/ VHT1MCS0	36/40/48/52/56/64/100 /120/140/149/157/165	1
	11n(40)/ac(40)	MCS0/ VHT1MCS0	38/46/54/62/102/110 /118/134/151/159	1
Power Spectral Density	11a/n(20)/ac(20)	6 Mbps/ MCS0/ VHT1MCS0	36/40/48/52/56/64/100 /120/140/149/157/165	1
	11n(40)/ac(40)	VHT1MCS0	38/46/54/62/102/110 /118/134/151/159	1
26 dB and 99% Emission Bandwidth	11a/n(20)/ac(20)	6 Mbps/ MCS0/ VHT1MCS0	36/40/48/52/56/64/100 /120/140/149/157/165	1
	11n(40)/ac(40)	MCS0/ VHT1MCS0	38/46/54/62/102/110 /118/134/151/159	1
Minimum 6 dB bandwidth	11a/n(20)/ac(20)	6 Mbps/ MCS0/ VHT1MCS0	36/40/48/52/56/64/100 /120/140/149/157/165	1
	11n(40)/ac(40)	VHT1MCS0	38/46/54/62/102/110 /118/134/151/159	1
Radiated Emissions Below 1GHz	Normal Link	-	-	-
Radiated Emissions Above 1GHz	11a/n(20)/ac(20)	6 Mbps/ MCS0/ VHT1MCS0	36/40/48/52/56/64/100 /120/140/149/157/165	1
	11n(40)/ac(40)	VHT1MCS0	38/46/54/62/102/110 /118/134/151/159	1
Band Edge Emissions	11a/n(20)/ac(20)	6 Mbps/ MCS0/ VHT1MCS0	36/40/48/52/56/64/100 /120/140/149/157/165	1
	11n(40)/ac(40)	MCS0/ VHT1MCS0	38/46/54/62/102/110 /118/134/151/159	1
Dynamic Frequency Selection(DFS)	ac(40)	VHT1MCS0	58/106	1

Note:

(1) The measurements are performed at the highest, middle, lowest available channels.

(2) The measurements are performed at all Bit Rate of Transmitter, the worst data was reported

2.3 BLOCK DIGRAM SHOWING THE CONFIGURATION OF SYSTEM TESTED

For AC Conducted Emission Mode

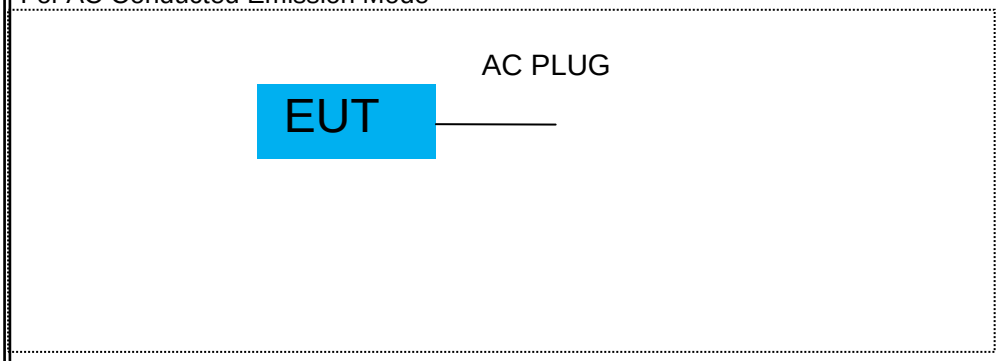

For Radiated Test Cases

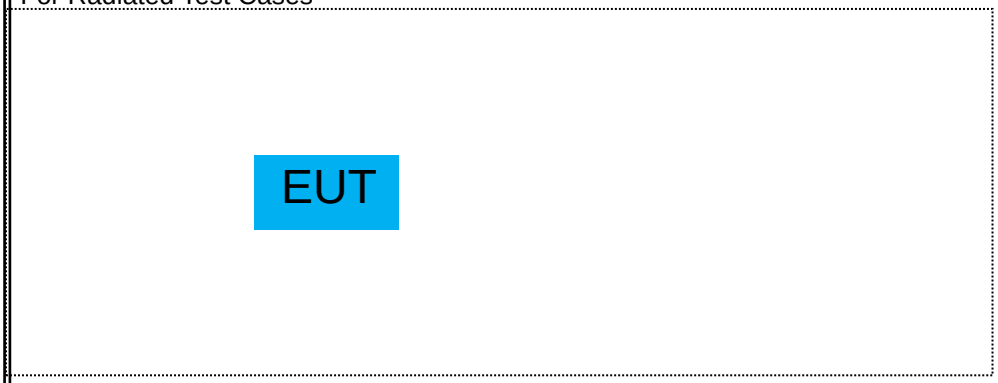

For Conducted Test Cases

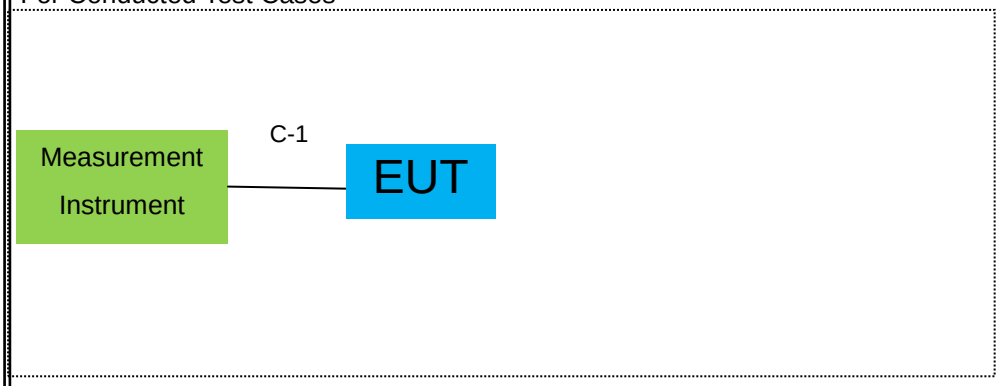

Note: 1. The temporary antenna connector is soldered on the PCB board in order to perform conducted tests and this temporary antenna connector is listed in the equipment list.

1. EUT built-in battery-powered, the battery is fully-charged.

2.4 DESCRIPTION OF SUPPORT UNITS(CONDUCTED MODE)

The EUT has been tested as an independent unit together with other necessary accessories or support units. The following support units or accessories were used to form a representative test configuration during the tests.

Item	Equipment	Brand	Model/Type No.	Series No.	Note

Item	Cable Type	Shielded Type	Ferrite Core	Length	Note
C-1	RF Cable	YES	NO	0.1m	

Note:

(1) The support equipment was authorized by Declaration of Confirmation.
(2) For detachable type I/O cable should be specified the length in cm in『Length』column.

2.5 EQUIPMENTS LIST FOR ALL TEST ITEMS

Radiation& Conducted Test equipment

Item	Kind of Equipment	Manufacturer	Type No.	Serial No.	Last calibration	Calibrated until	Calibration period
1	Spectrum Analyzer	Aglient	E4407B	MY45108040	2018.05.19	2019.05.18	1 year
2	Spectrum Analyzer	Agilent	N9020A	MY49100060	2018.10.08	2019.10.07	1 year
3	Spectrum Analyzer	R&S	FSV40	101417	2018.10.08	2019.10.07	1 year
4	Test Receiver	R&S	ESPI7	101318	2018.05.19	2019.05.18	1 year
5	Bilog Antenna	TESEQ	CBL6111D	31216	2018.04.08	2019.04.07	1 year
6	50Ω Coaxial Switch	Anritsu	MP59B	6200983705	2018.05.19	2020.05.18	2 year
7	Horn Antenna	EM	EM-AH-10180	2011071402	2018.04.08	2019.04.07	1 year
8	Broadband Horn Antenna	SCHWARZBECK	BBHA 9170	803	2018.11.03	2019.11.02	1 year
9	Amplifier	EMC	EMC051835SE	980246	2018.08.05	2019.08.04	1 year
10	Active Loop Antenna	SCHWARZBECK	FMZB 1519 B	055	2018.11.03	2019.11.02	1 year
11	Power Meter	DARE	RPR3006W	15I00041SNO84	2018.08.05	2019.08.04	1 year
12	Test Cable (9KHz-30MHz)	N/A	R-01	N/A	2017.04.21	2020.04.20	3 year
13	Test Cable (30MHz-1GHz)	N/A	R-02	N/A	2017.04.21	2020.04.20	3 year
14	High Test Cable(1G-40GHz)	N/A	R-03	N/A	2017.04.21	2020.04.20	3 year
15	High Test Cable(1G-40GHz)	N/A	R-04	N/A	2017.04.21	2020.04.20	3 year
16	Filter	TRILTHIC	2400MHz	29	2017.04.19	2020.04.18	3 year
17	temporary antenna connector (Note)	NTS	R001	N/A	N/A	N/A	N/A

Note:
We will use the temporary antenna connector (soldered on the PCB board) When conducted test
And this temporary antenna connector is listed within the instrument list

AC Conduction Test equipment

Item	Kind of Equipment	Manufacturer	Type No.	Serial No.	Last calibration	Calibrated until	Calibration period
1	Test Receiver	R&S	ESCI	101160	2018.05.19	2019.05.18	1 year
2	LISN	R&S	ENV216	101313	2018.04.18	2019.04.19	1 year
3	LISN	SCHWARZBECK	NNLK 8129	8129245	2018.05.19	2019.05.18	1 year
4	50Ω Coaxial Switch	ANRITSU CORP	MP59B	6200983704	2018.05.19	2020.05.18	2 year
5	Test Cable (9KHz-30MHz)	N/A	C01	N/A	2017.04.21	2020.04.20	3 year
6	Test Cable (9KHz-30MHz)	N/A	C02	N/A	2017.04.21	2020.04.20	3 year
7	Test Cable (9KHz-30MHz)	N/A	C03	N/A	2017.04.21	2020.04.20	3 year

Note: Each piece of equipment is scheduled for calibration once a year except the Test Cable& Aux Equipment which is scheduled for calibration every 3 years.

3. EMC EMISSION TEST

3.1 CONDUCTED EMISSION MEASUREMENT

3.1.1 APPLICABLE STANDARD

According to FCC Part 15.207(a) and KDB 174176 D01 Line Conducted FAQ v01r01

3.1.2 CONFORMANCE LIMIT

Frequency(MHz)	Conducted Emission Limit	
	Quasi-peak	Average
0.15-0.5	66-56*	56-46*
0.5-5.0	56	46
5.0-30.0	60	50
Note: 1. *Decreases with the logarithm of the frequency 2. The lower limit shall apply at the transition frequencies 3. The limit decreases in line with the logarithm of the frequency in the range of 0.15 to 0.50MHz.		

3.1.3 TEST CONFIGURATION

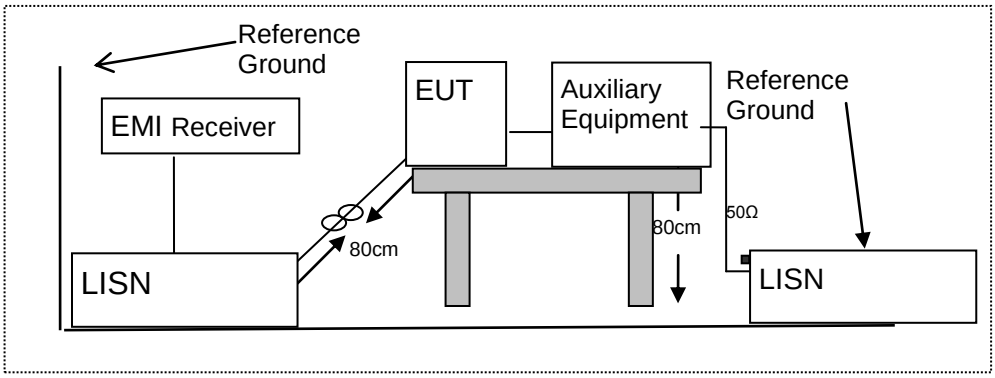

3.1.4 TEST PROCEDURE

According to the requirements in Section 13.1.4.1 of ANSI C63.10-2013 Conducted emissions the EUT measured in the frequency range between 0.15 MHz and 30 MHz using CISPR Quasi-Peak and average detector mode.

1. The EUT was placed 0.4 meter from the conducting wall of the shielding room.
2. The EUT was placed on a table which is 0.8m above ground plane.
3. Connect EUT to the power mains through a line impedance stabilization network (LISN). All other support equipments powered from additional LISN(s). The LISN provide 50 Ohm/ 50uH of coupling impedance for the measuring instrument.
4. Interconnecting cables that hang closer than 40 cm to the ground plane shall be folded back and forth in the center forming a bundle 30 to 40cm long.
5. I/O cables that are not connected to a peripheral shall be bundled in the center. The end of the cable may be terminated, if required, using the correct terminating impedance. The overall length shall not exceed 1 m.
6. LISN at least 80 cm from nearest part of EUT chassis.
7. The frequency range from 150KHz to 30MHz was searched.
8. Set the test-receiver system to Peak Detect Function and specified bandwidth(IF bandwidth=9KHz) with Maximum Hold Mode
9. For the actual test configuration, please refer to the related Item –EUT Test Photos.

EUT：	LTE SMARTPHONE	Model Name. ：	RG725
Temperature：	26 ℃	Relative Humidity：	56%
Pressure：	1010hPa	Phase：	L
Test Voltage ：	DC 5V from Adapter AC 120V/60Hz	Test Mode：	Mode 1

Frequency (MHz)	Reading Level (dBμV)	Correct Factor (dB)	Measure-ment (dBμV)	Limits (dBμV)	Margin (dB)	Remark
0.1859	25.48	9.76	35.24	54.21	-18.97	AVG
0.1862	41.02	9.76	50.78	64.20	-13.42	QP
1.1698	25.72	9.74	35.46	46.00	-10.54	AVG
1.1818	33.69	9.74	43.43	56.00	-12.57	QP
2.5899	32.07	9.80	41.87	56.00	-14.13	QP
2.5899	22.09	9.80	31.89	46.00	-14.11	AVG
3.1979	33.68	9.83	43.51	56.00	-12.49	QP
3.326	23.00	9.84	32.84	46.00	-13.16	AVG
4.1817	18.48	9.85	28.33	46.00	-17.67	AVG
4.3459	31.04	9.86	40.90	56.00	-15.10	QP
15.1257	27.54	10.10	37.64	60.00	-22.36	QP
15.1257	16.27	10.10	26.37	50.00	-23.63	AVG

Remark:

1. All readings are Quasi-Peak and Average values.
2. Factor = Insertion Loss + Cable Loss.

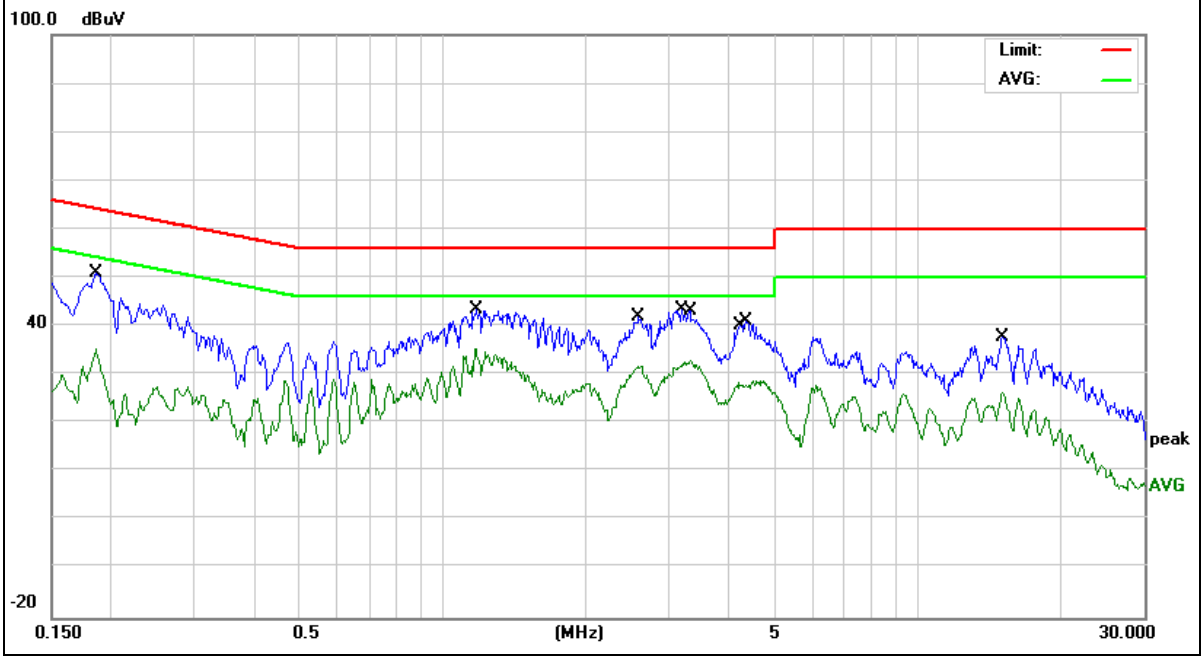

EUT：	LTE SMARTPHONE	Model Name. ：	RG725
Temperature：	26 ℃	Relative Humidity：	56%
Pressure：	1010hPa	Phase：	N
Test Voltage ：	DC 5V from Adapter AC 120V/60Hz	Test Mode：	Mode 1

Frequency (MHz)	Reading Level (dBμV)	Correct Factor (dB)	Measure-ment (dBμV)	Limits (dBμV)	Margin (dB)	Remark
0.1859	19.29	9.73	29.02	54.21	-25.19	AVG
0.1872	34.93	9.73	44.66	64.16	-19.50	QP
0.222	11.59	9.73	21.32	52.74	-31.42	AVG
0.2316	31.80	9.74	41.54	62.39	-20.85	QP
1.3938	16.74	9.76	26.50	46.00	-19.50	AVG
1.4338	29.24	9.77	39.01	56.00	-16.99	QP
2.9219	28.31	9.86	38.17	56.00	-17.83	QP
3.0139	16.52	9.87	26.39	46.00	-19.61	AVG
3.91	15.67	9.92	25.59	46.00	-20.41	AVG
3.958	28.12	9.92	38.04	56.00	-17.96	QP
5.2057	29.79	9.94	39.73	60.00	-20.27	QP
5.2057	15.38	9.94	25.32	50.00	-24.68	AVG

Remark:

1. All readings are Quasi-Peak and Average values.
2. Factor = Insertion Loss + Cable Loss.

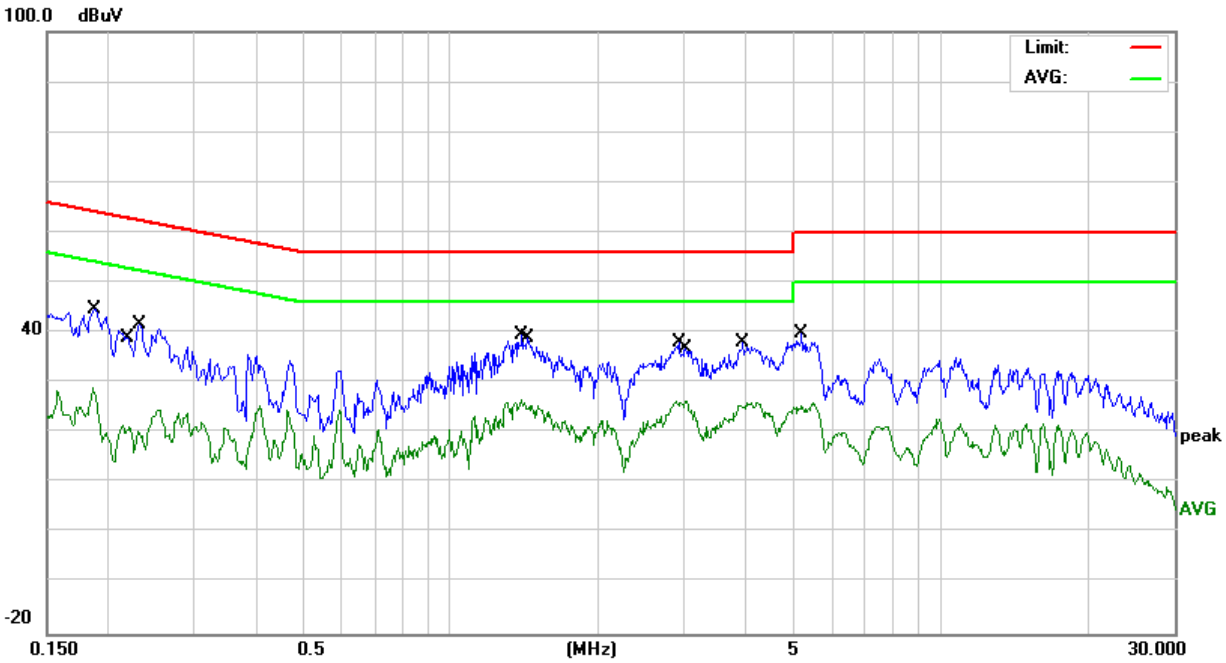

EUT：	LTE SMARTPHONE	Model Name. ：	RG725
Temperature：	26 ℃	Relative Humidity：	56%
Pressure：	1010hPa	Phase：	L
Test Voltage ：	DC 5V from Adapter AC 240V/60Hz	Test Mode：	Mode 1

Frequency (MHz)	Reading Level (dBμV)	Correct Factor (dB)	Measure-ment (dBμV)	Limits (dBμV)	Margin (dB)	Remark
0.2419	37.62	9.74	47.36	62.03	-14.67	QP
0.2459	28.70	9.74	38.44	51.89	-13.45	AVG
0.4178	24.63	9.75	34.38	47.49	-13.11	AVG
0.4299	35.31	9.75	45.06	57.25	-12.19	QP
0.5978	34.03	9.75	43.78	56.00	-12.22	QP
0.5978	23.80	9.75	33.55	46.00	-12.45	AVG
1.018	35.95	9.75	45.70	56.00	-10.30	QP
1.054	22.88	9.75	32.63	46.00	-13.37	AVG
1.4418	36.65	9.77	46.42	56.00	-9.58	QP
1.4618	23.94	9.77	33.71	46.00	-12.29	AVG
3.93	34.22	9.92	44.14	56.00	-11.86	QP
4.022	21.16	9.92	31.08	46.00	-14.92	AVG

Remark:

1. All readings are Quasi-Peak and Average values.
2. Factor = Insertion Loss + Cable Loss.

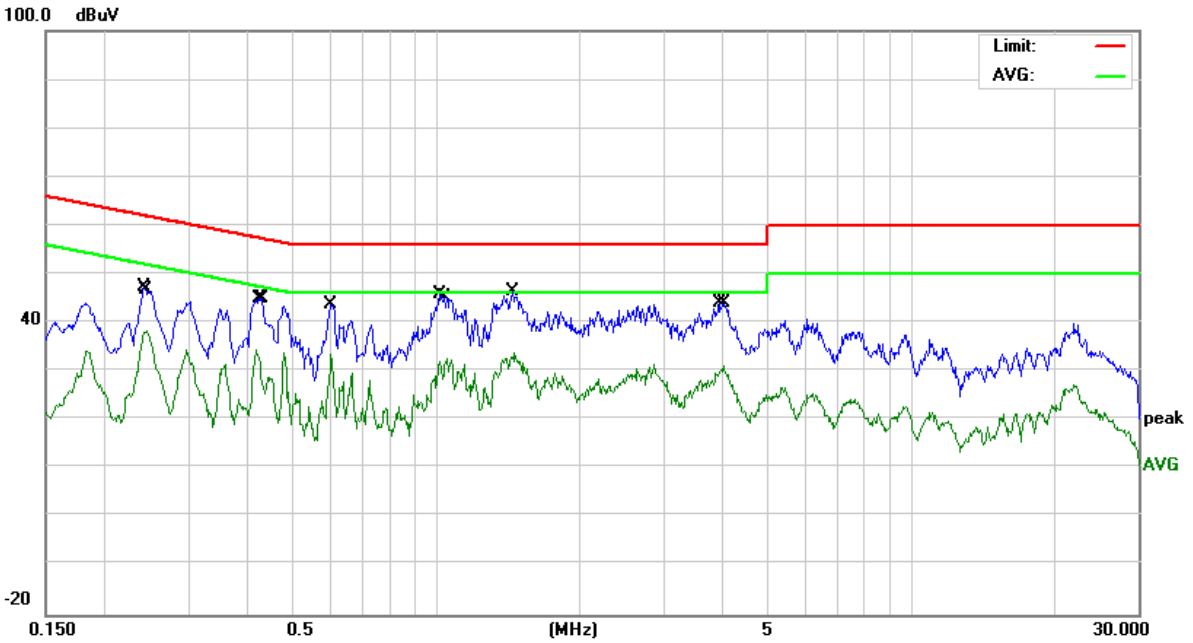

EUT：	LTE SMARTPHONE	Model Name. ：	RG725
Temperature：	26 ℃	Relative Humidity：	56%
Pressure：	1010hPa	Phase：	N
Test Voltage ：	DC 12V from Adapter AC 240V/60Hz	Test Mode：	Mode 1

Frequency (MHz)	Reading Level (dBμV)	Correct Factor (dB)	Measure-ment (dBμV)	Limits (dBμV)	Margin (dB)	Remark
0.1833	41.93	9.73	51.66	64.33	-12.67	QP
0.1833	34.13	9.73	43.86	54.33	-10.47	AVG
0.4778	36.71	9.75	46.46	56.38	-9.92	QP
0.4778	28.95	9.75	38.70	46.38	-7.68	AVG
0.7258	36.69	9.75	46.44	56.00	-9.56	QP
0.7258	29.85	9.75	39.60	46.00	-6.40	AVG
0.782	37.26	9.75	47.01	56.00	-8.99	QP
0.786	28.85	9.75	38.60	46.00	-7.40	AVG
1.014	35.97	9.75	45.72	56.00	-10.28	QP
1.014	27.06	9.75	36.81	46.00	-9.19	AVG
3.346	25.65	9.89	35.54	46.00	-10.46	AVG
3.366	36.59	9.89	46.48	56.00	-9.52	QP

Remark:
1. All readings are Quasi-Peak and Average values.
2. Factor = Insertion Loss + Cable Loss.

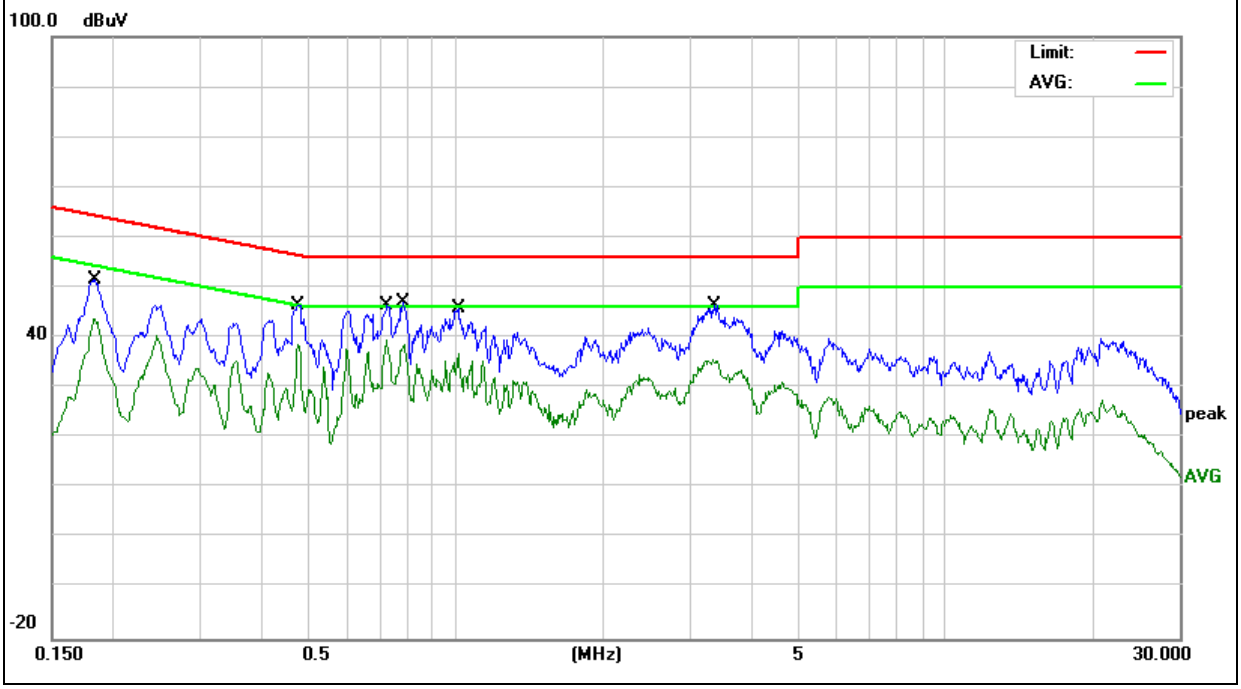

3.2 RADIATED EMISSION MEASUREMENT

3.2.1 APPLICABLE STANDARD

According to FCC Part 15.407(d) and 15.209

3.2.2 CONFORMANCE LIMIT

According to FCC Part 15.407(b)(7): radiated emissions which fall in the restricted bands, as defined in §15.205(a), must also comply with the radiated emission limits specified in §15.209(a) (see §15.205(c)).
According to FCC Part15.205, Restricted bands

MHz	MHz	MHz	GHz
0.090-0.110	16.42-16.423	399.9-410	4.5-5.15
10.495-0.505	16.69475-16.69525	608-614	5.35-5.46
2.1735-2.1905	16.80425-16.80475	960-1240	7.25-7.75
4.125-4.128	25.5-25.67	1300-1427	8.025-8.5
4.17725-4.17775	37.5-38.25	1435-1626.5	9.0-9.2
4.20725-4.20775	73-74.6	1645.5-1646.5	9.3-9.5
6.215-6.218	74.8-75.2	1660-1710	10.6-12.7
6.26775-6.26825	123-138	2200-2300	14.47-14.5
8.291-8.294	149.9-150.05	2310-2390	15.35-16.2
8.362-8.366	156.52475-156.52525	2483.5-2500	17.7-21.4
8.37625-8.38675	156.7-156.9	2690-2900	22.01-23.12
8.41425-8.41475	162.0125-167.17	3260-3267	23.6-24.0
12.29-12.293	167.72-173.2	3332-3339	31.2-31.8
12.51975-12.52025	240-285	3345.8-3358	36.43-36.5
12.57675-12.57725	322-335.4	3600-4400	(2)
13.36-13.41			

20dBc in any 100 kHz bandwidth outside the operating frequency band. In case the emission fall within the restricted band specified on 15.205(a), then the 15.209(a) limit in the table below has to be followed.

Restricted Frequency(MHz)	Field Strength (μV/m)	Field Strength (dBμV/m)	Measurement Distance
0.009~0.490	2400/F(KHz)	20 log (uV/m)	300
0.490~1.705	2400/F(KHz)	20 log (uV/m)	30
1.705~30.0	30	29.5	30
30-88	100	40	3
88-216	150	43.5	3
216-960	200	46	3
Above 960	500	54	3

Limits of Radiated Emission Measurement(Above 1000MHz)

Frequency(MHz)	Class B (dBuV/m) (at 3M)	
	PEAK	AVERAGE
Above 1000	74	54

Remark :1. Emission level in dBuV/m=20 log (uV/m)
2. Measurement was performed at an antenna to the closed point of EUT distance of meters.
3. For Frequency 9kHz~30MHz:
Distance extrapolation factor =40log(Specific distance/ test distance)(dB);
Limit line=Specific limits(dBuV) + distance extrapolation factor.
For Frequency above 30MHz:
Distance extrapolation factor =20log(Specific distance/ test distance)(dB);
Limit line=Specific limits(dBuV) + distance extrapolation factor.

3.2.3 MEASURING INSTRUMENTS

The Measuring equipment is listed in the section 6.3 of this test report.

3.2.4 TEST CONFIGURATION

(a) For radiated emissions below 30MHz

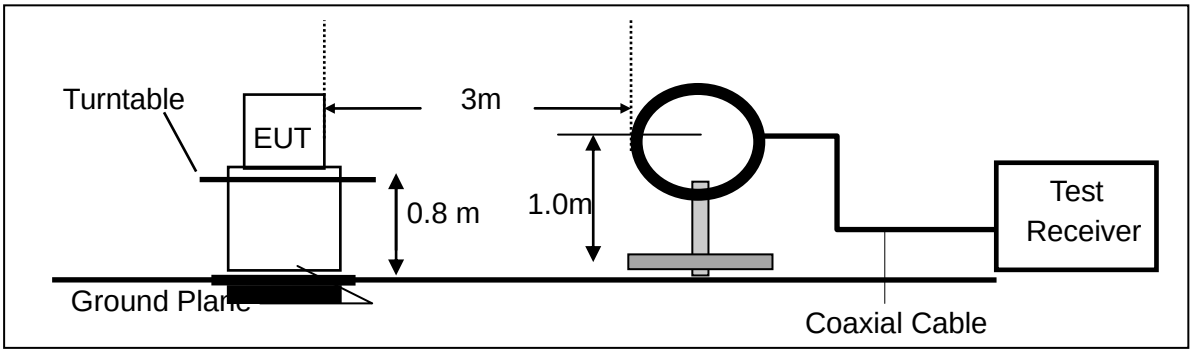

(b) For radiated emissions from 30MHz to 1000MHz

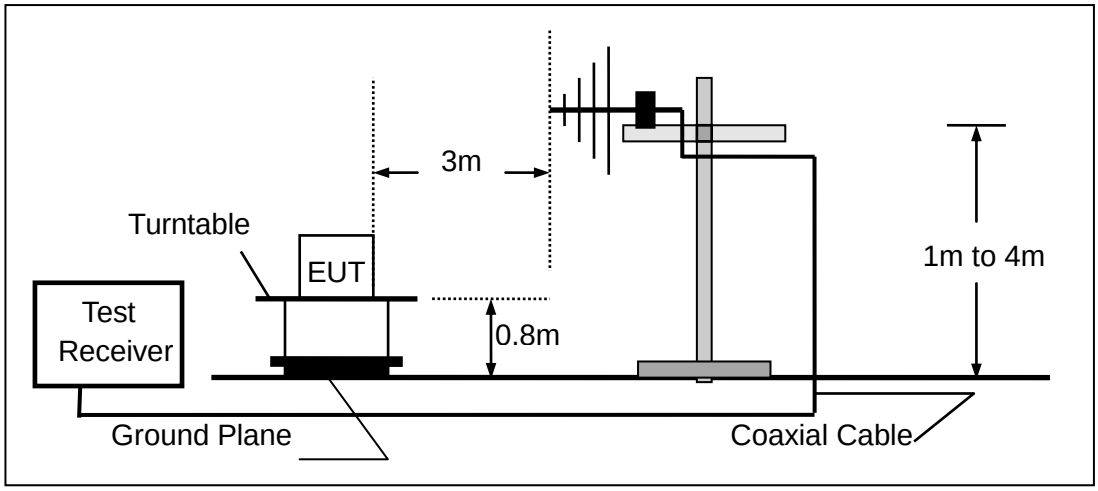

(c) For radiated emissions above 1000MHz

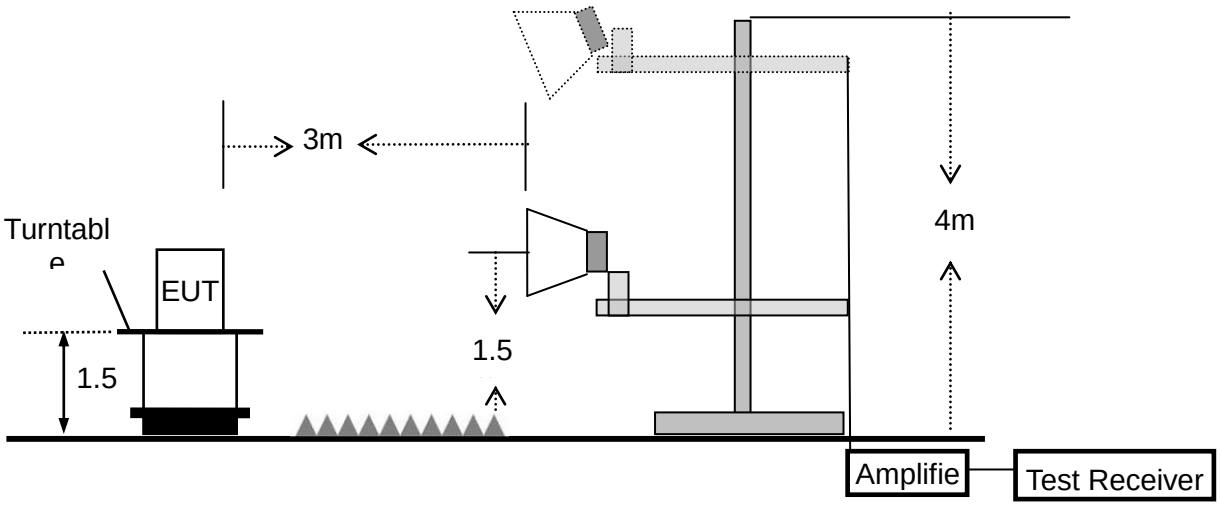

3.2.5 TEST PROCEDURE

The test site semi-anechoic chamber has met the requirement of NSA tolerance 4 dB according to the standards: ANSI C63.10-2013. The test distance is 3m.The setup is according to the requirements in Section 13.1.4.1 of ANSI C63.10-2013 and CAN/CSA-CEI/IEC CISPR 22.
This test is required for any spurious emission that falls in a Restricted Band, as defined in Section 15.205.
It must be performed with the highest gain of each type of antenna proposed for use with the EUT.
Use the following spectrum analyzer settings:

Spectrum Parameter	Setting
Attenuation	Auto
Start Frequency	1000 MHz
Stop Frequency	10th carrier harmonic
RB / VB (emission in restricted band)	1 MHz / 1 MHz for Peak, 1 MHz / 10Hz for Average

Receiver Parameter	Setting
Attenuation	Auto
Start ~ Stop Frequency	9kHz~150kHz / RB 200Hz for QP
Start ~ Stop Frequency	150kHz~30MHz / RB 9kHz for QP
Start ~ Stop Frequency	30MHz~1000MHz / RB 120kHz for QP

a. The measuring distance of at 3 m shall be used for measurements at frequency up to 1GHz. For frequencies above 1GHz, any suitable measuring distance may be used.
b. The EUT was placed on the top of a rotating table 0.8 m for below 1GHz and 1.5m for above 1GHz the ground at a 3 meter. The table was rotated 360 degrees to determine the position of the highest radiation.
c. The height of the equipment or of the substitution antenna shall be 0.8 m for below 1GHz and 1.5m for above 1GHz; the height of the test antenna shall vary between 1 m to 4 m. Both horizontal and vertical polarizations of the antenna are set to make the measurement.
d. The initial step in collecting conducted emission data is a spectrum analyzer peak detector mode pre-scanning the measurement frequency range. Significant peaks are then marked and then Quasi Peak detector mode re-measured.
e. If the Peak Mode measured value compliance with and lower than Quasi Peak Mode Limit, the EUT shall be deemed to meet QP Limits and then no additional QP Mode measurement performed.
f. For the actual test configuration, please refer to the related Item –EUT Test Photos.

Note:

Both horizontal and vertical antenna polarities were tested
and performed pretest to three orthogonal axis. The worst case emissions were reported

During the radiated emission test, the Spectrum Analyzer was set with the following configurations:

Frequency Band (MHz)	Function	Resolution bandwidth	Video Bandwidth
30 to 1000	QP	120 kHz	300 kHz
Above 1000	Peak	1 MHz	1 MHz
	Average	1 MHz	10 Hz

Note: for the frequency ranges below 30 MHz, a narrower RBW is used for these ranges but the measured value should add a RBW correction factor (RBWCF) where RBWCF [dB] =10*lg(100 [kHz]/narrower RBW [kHz]). , the narrower RBW is 1 kHz and RBWCF is 20 dB for the frequency 9 kHz to 150 kHz, and the narrower RBW is 10 kHz and RBWCF is 10 dB for the frequency 150 kHz to 30 MHz.

3.2.6 TEST RESULTS (9KHZ – 30 MHZ)

EUT：	LTE SMARTPHONE	Model Name. ：	RG725
Temperature：	20 ℃	Relative Humidtity：	48%
Pressure：	1010 hPa	Test Voltage ：	DC 3.8V
Test Mode ：	TX	Polarization :	--

Freq.	Reading	Limit	Margin	State
(MHz)	(dBuV/m)	(dBuV/m)	(dB)	P/F
--	--	--	--	N/A
--	--	--	--	N/A

NOTE:

The amplitude of spurious emissions which are attenuated by more than 20dB below the permissible value has no need to be reported.

3.2.7 TEST RESULTS (30MHZ – 1GHZ)

EUT：	LTE SMARTPHONE	Model Name. ：	RG725
Temperature：	20 ℃	Relative Humidity：	48%
Pressure：	1010 hPa	Test Voltage ：	DC 3.8V
Test Mode ：	TX(5.2G)- 802.11a (High CH)		

Polar (H/V)	Frequency (MHz)	Meter Reading (dBuV)	Factor (dB)	Emission Level (dBuV/m)	Limits (dBuV/m)	Margin (dB)	Remark
V	34.1561	9.65	17.05	26.70	40.00	-13.30	QP
V	46.0162	11.99	11.24	23.23	40.00	-16.77	QP
V	58.2030	19.21	6.72	25.93	40.00	-14.07	QP
V	165.4866	21.59	11.41	33.00	43.50	-10.50	QP
V	281.0074	11.34	17.00	28.34	46.00	-17.66	QP
V	597.2232	14.01	23.76	37.77	46.00	-8.23	QP

Remark:
Absolute Level= ReadingLevel+ Factor, Margin= Absolute Level - Limit

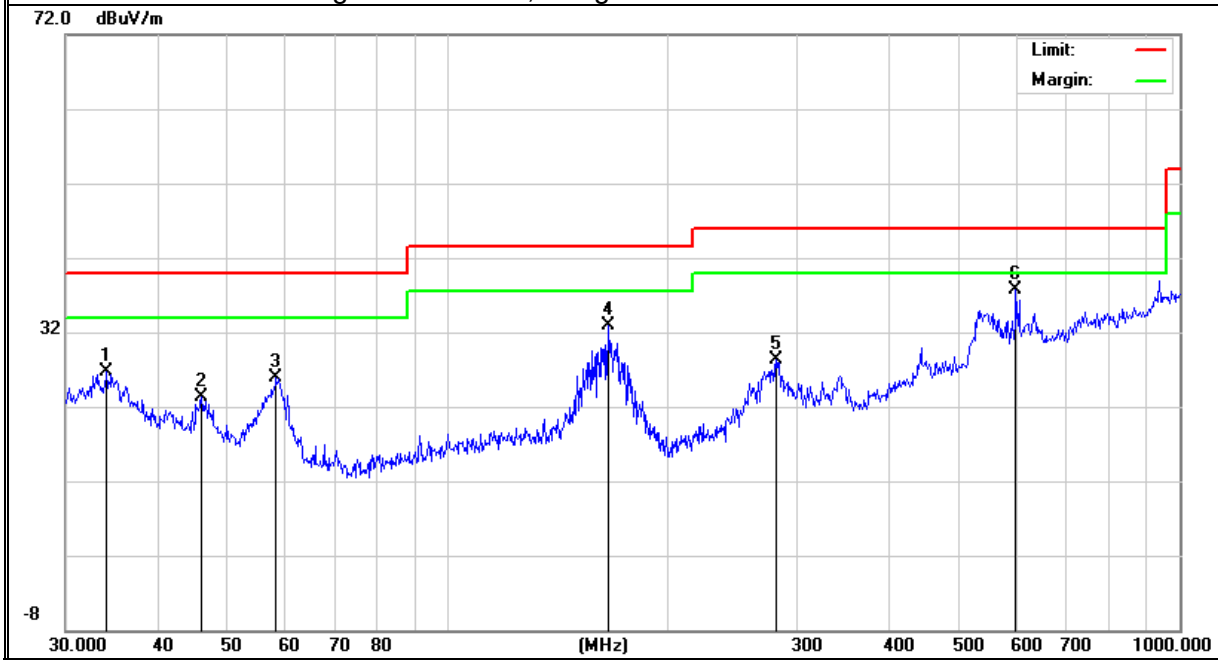

Polar (H/V)	Frequency (MHz)	Meter Reading (dBuV)	Factor (dB)	Emission Level (dBuV/m)	Limits (dBuV/m)	Margin (dB)	Remark
H	58.6126	16.49	6.66	23.15	40.00	-16.85	QP
H	167.2366	23.96	11.39	35.35	43.50	-8.15	QP
H	280.0237	10.02	17.37	27.39	46.00	-18.61	QP
H	444.8514	10.01	20.32	30.33	46.00	-15.67	QP
H	535.7073	13.14	23.04	36.18	46.00	-9.82	QP
H	962.1621	6.79	31.17	37.96	54.00	-16.04	QP

Remark:
Absolute Level= ReadingLevel+ Factor, Margin= Absolute Level - Limit

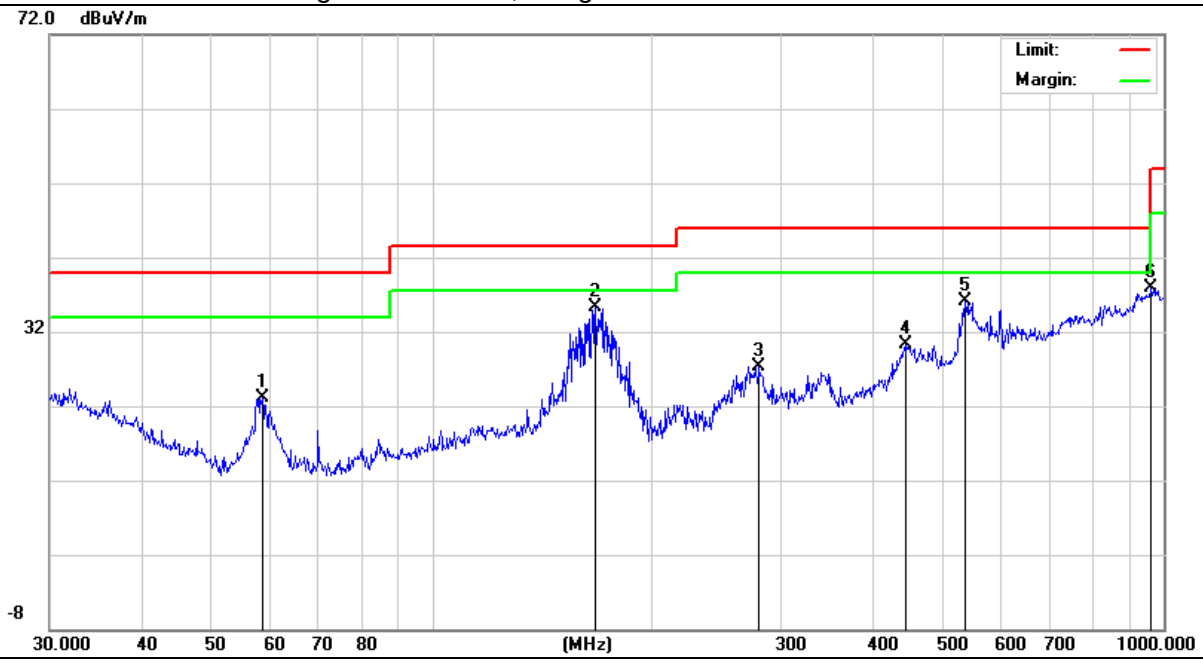

EUT：	LTE SMARTPHONE	Model Name. ：	RG725
Temperature：	20 ℃	Relative Humidity：	48%
Pressure：	1010 hPa	Test Voltage ：	DC 3.8V
Test Mode ：	TX(5.3G)- 802.11a (High CH)		

Polar (H/V)	Frequency (MHz)	Meter Reading (dBuV)	Factor (dB)	Emission Level (dBuV/m)	Limits (dBuV/m)	Margin (dB)	Remark
V	36.3813	13.65	16.12	29.77	40.00	-10.23	QP
V	49.8813	19.91	9.34	29.25	40.00	-10.75	QP
V	70.8315	22.29	6.89	29.18	40.00	-10.82	QP
V	153.2004	22.27	12.61	34.88	43.50	-8.62	QP
V	213.0149	22.26	10.91	33.17	43.50	-10.33	QP
V	314.3765	20.04	16.41	36.45	46.00	-9.55	QP

Remark:
Absolute Level= ReadingLevel+ Factor, Margin= Absolute Level - Limit

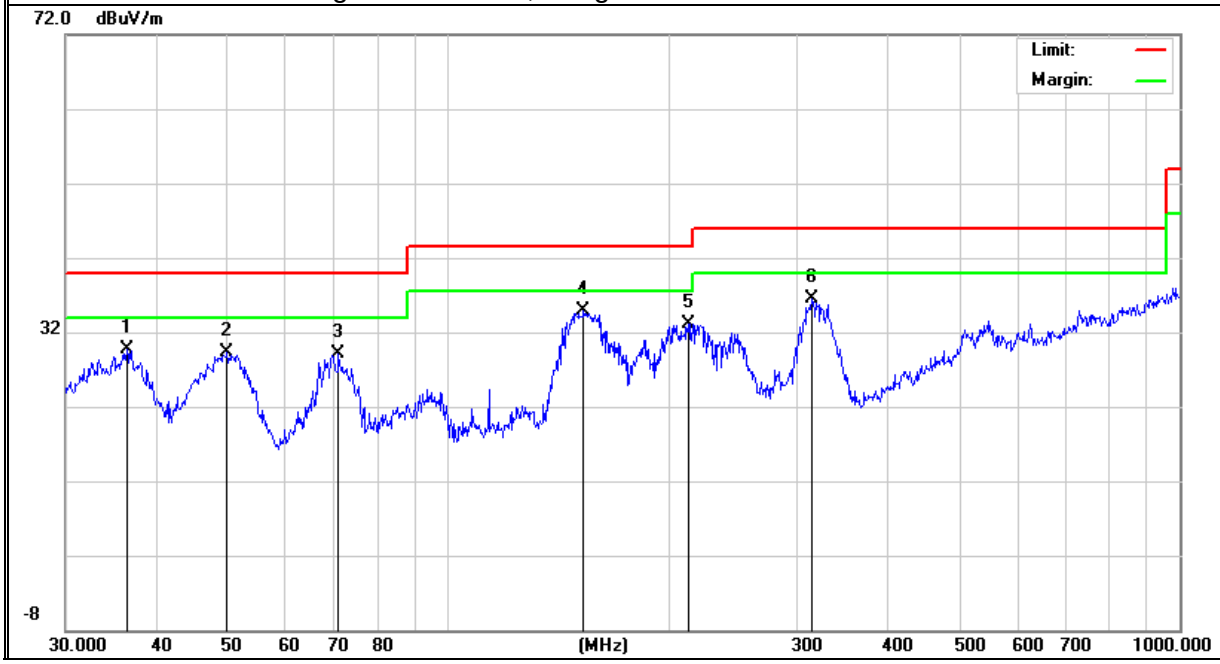

Polar (H/V)	Frequency (MHz)	Meter Reading (dBuV)	Factor (dB)	Emission Level (dBuV/m)	Limits (dBuV/m)	Margin (dB)	Remark
H	37.2854	12.08	15.62	27.70	40.00	-12.30	QP
H	49.3594	14.34	9.89	24.23	40.00	-15.77	QP
H	164.9072	22.76	11.41	34.17	43.50	-9.33	QP
H	262.8955	22.28	15.81	38.09	46.00	-7.91	QP
H	324.4560	20.40	16.63	37.03	46.00	-8.97	QP
H	452.7196	13.58	20.49	34.07	46.00	-11.93	QP
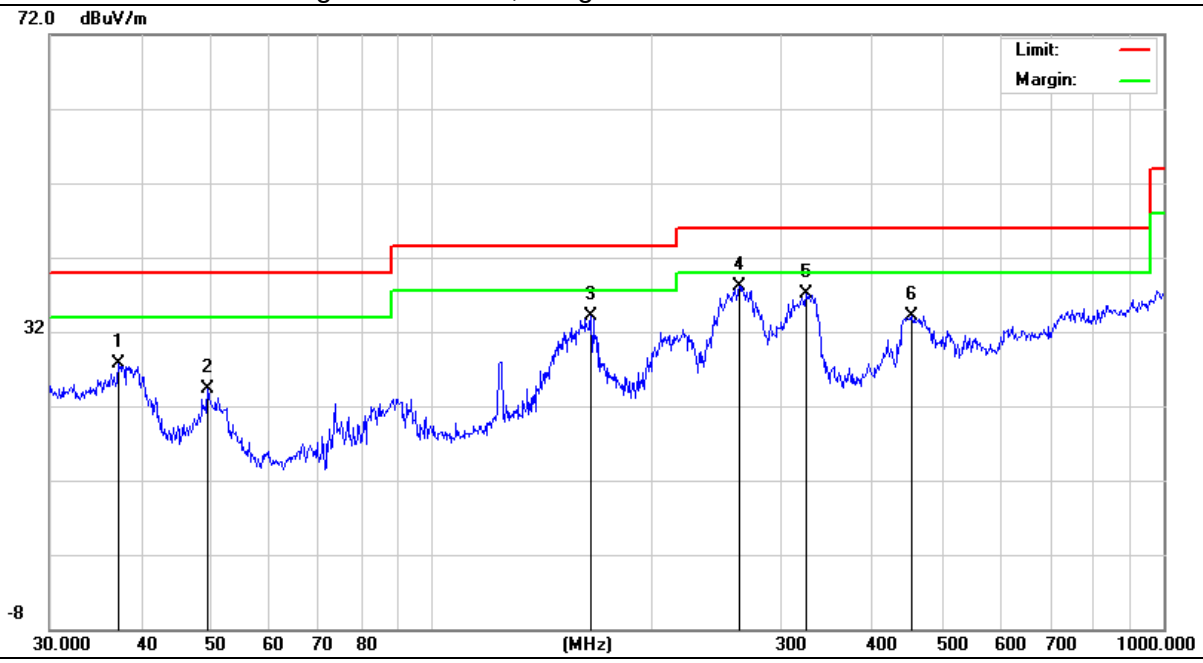
Remark:
Absolute Level= ReadingLevel+ Factor, Margin= Absolute Level - Limit