RADIO TEST REPORT

(FCC Part 15 Subpart E)

Applicant:	Power Idea Technology (Shenzhen) Co., Ltd.
Address:	4th Floor, A Section ,Languang Science&technology Building, No. 7 Xinxi RD,Hi-Tech Industrial Park North, Nanshan District Shenzhen, China.

Manufacturer:	Power Idea Technology (Shenzhen) Co., Ltd.
Address:	4th Floor, A Section ,Languang Science&technology Building, No. 7 Xinxi RD,Hi-Tech Industrial Park North, Nanshan District Shenzhen, China.
Product:	Smart Phone
Brand Name:	RugGear
Model Name:	PSM02G
Marketing Name:	RG750
FCC ID:	ZLE-RG750
Date of tests:	Nov. 02, 2022 ~ Nov. 23, 2022

The tests have been carried out according to the requirements of the following standard:

☒ **Part 15 Subpart E §15. 407**

CONCLUSION: The submitted sample was found to COMPLY with the test requirement

Prepared by Simon Wang Engineer / Mobile Department	Approved by Luke Lu Manager / Mobile Department
Simon Wang Date: Nov. 23, 2022	Luke Lu Date: Nov. 23, 2022

This report is governed by, and incorporates by reference, the Conditions of Testing as posted at the date of issuance of this report at http://www.bureauveritas.com/home/about-us/our-business/cps/about-us/terms-conditions/ and is intended for your exclusive use. Any copying or replication of this report to or for any other person or entity, or use of our name or trademark, is permitted only with our prior written permission. This report sets forth our findings solely with respect to the test samples identified herein. The results set forth in this report are not indicative or representative of the quality or characteristics of the lot from which a test sample was taken or any similar or identical product unless specifically and expressly noted. Our report includes all of the tests requested by you and the results thereof based upon the information that you provided to us. Measurement uncertainty is only provided upon request for accredited tests. Statements of conformity are based on simple acceptance criteria without taking measurement uncertainty into account, unless otherwise requested in writing. You have 60 days from date of issuance of this report to notify us of any material error or omission caused by our negligence or if you require measurement uncertainty; provided, however, that such notice shall be in writing and shall specifically address the issue you wish to raise. A failure to raise such issue within the prescribed time shall constitute your unqualified acceptance of the completeness of this report, the tests conducted and the correctness of the report contents.

Report Revise Record

ISSUE NO.	REASON FOR CHANGE	DATE ISSUED
W7L-P22110001RF08	Original release	Nov. 23, 2022

TABLE OF CONTENTS

1 GENERAL DESCRIPTION 5

1.1 APPLICANT 5
1.2 MANUFACTURER 5
1.3 GENERAL DESCRIPTION OF EUT 5
1.4 MODIFICATION OF EUT 6
1.5 APPLICABLE STANDARDS 7

2 TEST CONFIGURATION OF EQUIPMENT UNDER TEST 8

2.1 CARRIER FREQUENCY AND CHANNEL 8
2.2 TEST MODE 9
2.3 SUPPORT EQUIPMENT 9
2.4 TEST TOOL SOFTWARE VERSION 9
2.5 TEST SETUP 9
2.6 DFS DETECTION THRESHOLDS FOR MASTER DEVICES AND CLIENT DEVICES WITH RADAR DETECTION 11

3 REQUIREMENTS AND PARAMETERS FOR DFS TEST 12

3.1 APPLICABILITY OF DFS REQUIREMENTS 12
3.2 DFS RESPONSE REQUIREMENT VALUES 14
3.3 SHORT PULSE RADAR TEST WAVEFORMS 15
3.4 LONG PULSE RADAR TEST WAVEFORM 16
3.5 FREQUENCY HOPPING RADAR TEST WAVEFORM 16

4 CALIBRATION SETUP AND DFS TEST RESULTS 17

4.1 CALIBRATION OF RADAR WAVEFORM 17
4.2 IN-SERVICE MONITORING: CHANNEL MOVE TIME, CHANNEL CLOSING TRANSMISSION TIME AND NON-OCCUPANCY PERIOD 17

5 LIST OF MEASURING EQUIPMENT 21

6 APPENDIX 22

Summary of Dynamic Frequency Selection Test

UNII	Bandwidth and Channel	Description	Measured	Limit	Result	Test Lab*
UNII Band 2-A 5250-5350MHz & UNII Band 2-C 5470-5725MHz	80MHz (CH58) 5290MHz	Channel Move Time	2.0046s	10 sec	Pass	A
		Channel Closing Transmission time	<200ms + 35.1ms (aggregate)	200 ms + aggregate of 60 ms over remaining 10 s period	Pass	A
		Non-Occupancy Period and Client Beacon Test	No transmission or Beacons occurred	30 minutes	Pass	A
UNII Band 2-A 5250-5350MHz & UNII Band 2-C 5470-5725MHz	80MHz (CH106) 5530MHz	Channel Move Time	1.9019s	10 sec	Pass	A
		Channel Closing Transmission time	<200ms + 32.5ms (aggregate)	200 ms + aggregate of 60 ms over remaining 10 s period	Pass	A
		Non-Occupancy Period and Client Beacon Test	No transmission or Beacons occurred	30 minutes	Pass	A

Note:

1. Since the product is client without radar detection function, only Channel Move Time, Channel Closing Transmission Time and Non-Occupancy Period Test are required to be performed.

***Test Lab Information Reference**

Lab A:

BV 7Layers Communications Technology (Shenzhen) Co., Ltd

Lab Address:

No.B102, Dazu Chuangxin Mansion, North of Beihuan Avenue, North Area, Hi-Tech Industrial Park, Nanshan District, Shenzhen, Guangdong, China

Accredited Test Lab Cert 3939.01

FCC Site Registration No. : 525120; Designation No. : CN1171;

1 General Description

1.1 Applicant

Power Idea Technology (Shenzhen) Co., Ltd.
4th Floor, A Section ,Languang Science&technology Building, No. 7 Xinxi RD,Hi-Tech Industrial Park North, Nanshan District Shenzhen, China.

1.2 Manufacturer

Power Idea Technology (Shenzhen) Co., Ltd.
4th Floor, A Section ,Languang Science&technology Building, No. 7 Xinxi RD,Hi-Tech Industrial Park North, Nanshan District Shenzhen, China.

1.3 General Description Of EUT

PRODUCT	Smart Phone
BRAND NAME	RugGear
MODEL NAME	PSM02G
MARKETING NAME	RG750
Power Supply	5.0Vdc(adapter or host equipment) 3.8Vdc (Li-ion, battery)
HW Version	LA5C25_MB_V1.00
SW Version	LA5C25(RG750)_RG750_EEA_00.00_0_20221103_MultiDownload_20221103131135
Power Supply	5.0Vdc(adapter or host equipment) 3.8Vdc (Li-ion, battery)
Modulation Technology	64QAM,16QAM, QPSK, BPSK for OFDM
Modulation Type	802.11a/n/ac : OFDM
Operating Frequency	U-NII-2A:5250~5350MHz U-NII-2C:5500~5720MHz
Antenna Type	PIFA Antenna
Antenna Gain	<5250 MHz ~ 5350 MHz> -1.4 dBi <5500 MHz ~ 5720 MHz> -1.4 dBi
I/O Ports	Refer to user's manual

NOTE:

1. For a more detailed features description, please refer to the manufacturer's specifications or the user's manual.

2. For the test results, the EUT had been tested with all conditions. But only the worst case was shown in test report.

List of Accessory:

ACCESSORIES	BRAND	MANUFACTURER	MODEL	SPECIFICATION
Battery	N/A	SHENZHEN YJC TECHNOLOGY CO. LTD.	BL500IP	Capacity：3.8Vdc, 5000mAh
AC Adapter 1	Huntkey	Shenzhen Huntkey Electric Co., Ltd.	HKC0115021-2D	I/P: 100-240Vac, 0.5A, O/P: 5.0Vdc, 2A
AC Adapter 2	FULL POWER	Shenzhen Shi Ying Yuan Electronics Co., Ltd.	ICP12-050-2000 B	I/P: 100-240Vac, 0.3A, O/P: 5.0Vdc, 2A
Earphone	N/A	CXD SCIENCE TECHNOLOGY	AC-4035-M6	Rated：10mW, Max:20mW Signal Line,1.0meter
USB Cable	N/A	ShenZhen zhigaoda electronics Co., LTD	USB2.0	Signal Line,1.0meter

1.4 Modification of EUT

No modifications are made to the EUT during all test items.

1.5 Applicable Standards

According to the specifications of the manufacturer, the EUT must comply with the requirements of the following standards:

- FCC Part 15 Subpart E §15.407
- FCC KDB 905462 D02 UNII DFS Compliance Procedures New Rules v02
- FCC KDB 905462 D03 UNII Clients Without Radar Detection New Rules v01r02
- IC RSS-247 Issue 2
- The FCC Site Registration No. is 55120; The Designation No. is CN1171.

2 Test Configuration of Equipment Under Test

2.1 Carrier Frequency and Channel

U-NII-2A

CHANNEL	FREQUENCY	CHANNEL	FREQUENCY
52	5260 MHz	60	5300 MHz
54	5270 MHz	62	5310 MHz
56	5280 MHz	64	5320 MHz
58	5290 MHz		

U-NII-2C

CHANNEL	FREQUENCY	CHANNEL	FREQUENCY
100	5500 MHz	112	5560 MHz
102	5510 MHz	116	5580 MHz
104	5520 MHz	132	5660 MHz
106	5530 MHz	134	5670 MHz
108	5540 MHz	136	5680 MHz
110	5550 MHz	140	5700 MHz
144	5720 MHz		

TDWR

CHANNEL	FREQUENCY	CHANNEL	FREQUENCY
118	5590 MHz	124	5620 MHz
120	5600 MHz	126	5630 MHz
122	5610 MHz	128	5640 MHz

2.2 Test Mode

Additional requirements for devices with multiple bandwidth modes	Master Device or Client with Radar Detection	Client Without Radar Detection
U-NII Detection Bandwidth and Statistical Performance Check	All BW modes must be tested	Not required
Channel Move Time and Channel Closing Transmission Time	Test using widest BW mode available	Test using the widest BW mode available for the link
All other tests	Any single BW mode	Not required
Note: Frequencies selected for statistical performance check (Section 7.8.4) should include several frequencies within the radar detection bandwidth and frequencies near the edge of the radar detection bandwidth. For 802.11 devices it is suggested to select frequencies in each of the bonded 20 MHz channels and the channel center frequency.		

2.3 Support Equipment

Item	Equipment	Trade Name	Model Name	FCC ID	Data Cable	Power Cord
1.	Wireless Router	ASUS	RT-AX88U	MSQ-RTAXHP00	N/A	Unshielded, 1.8 m
2.	Notebook	Lenovo	Xiaoxinchao5000	FCC sDoC	N/A	shielded cable DC O/P 1.8 m unshielded AC I/P cable1.2 m

2.4 Test tool software version

Item	Trade Name	Model Name	FW Version
1.	Tonscend	JS1120-3	3.2.06

2.5 Test Setup

Master Modes

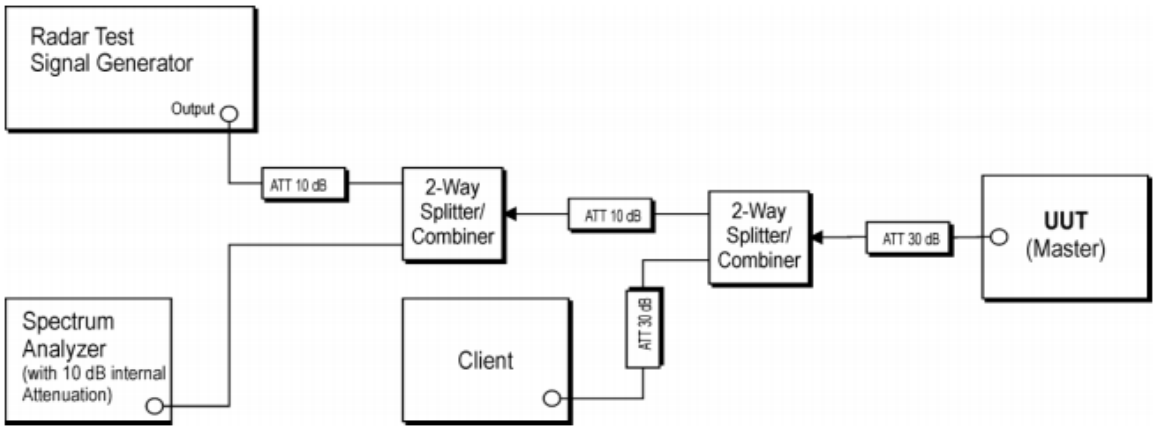

Client with injection at the Client Modes

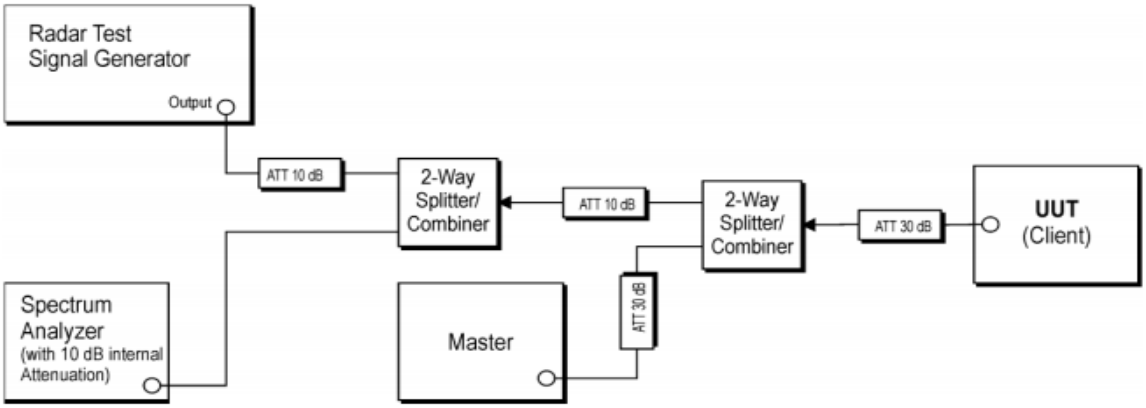

Client with injection at the Master Modes

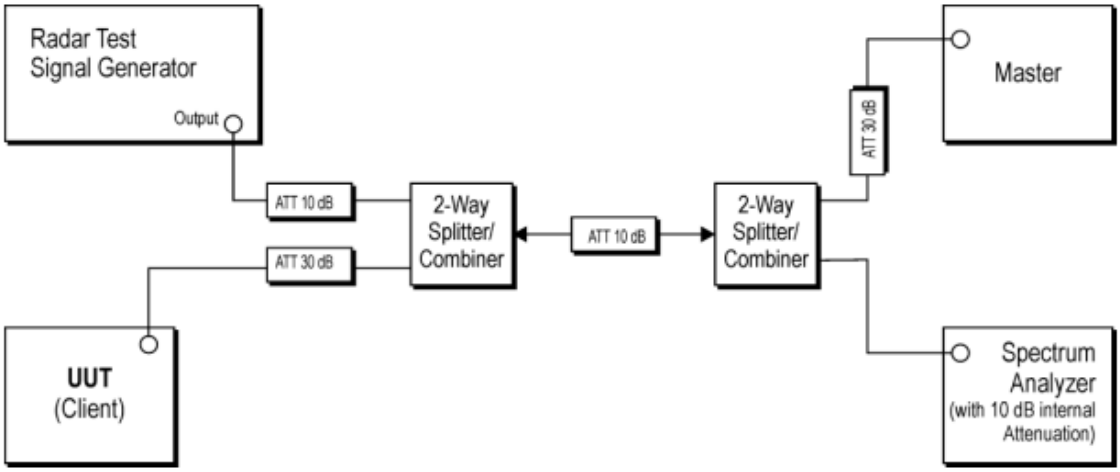

2.6 DFS Detection Thresholds for Master Devices and Client Devices with Radar Detection

Maximum Transmit Power	Value (See Notes 1, 2, and 3)
EIRP ≥ 200 milliwatt	-64 dBm
EIRP < 200 milliwatt and power spectral density < 10 dBm/MHz	-62 dBm
EIRP < 200 milliwatt that do not meet the power spectral density requirement	-64 dBm
Note 1: This is the level at the input of the receiver assuming a 0 dBi receive antenna. Note 2: Throughout these test procedures an additional 1 dB has been added to the amplitude of the test transmission waveforms to account for variations in measurement equipment. This will ensure that the test signal is at or above the detection threshold level to trigger a DFS response. Note3: EIRP is based on the highest antenna gain.	

The radar Detection Threshold, lowest antenna gain is the parameter of Interference radar DFS detection threshold, The Interference Detection Threshold is the (-62dBm) + (-0.5) [dBi]+ 1 dB= -61.5 dBm.

3 Requirements and Parameters for DFS Test

3.1 Applicability of DFS Requirements

EUT is client and operates as client without radar detection function.

Table 1: Applicability of DFS Requirements Prior to Use of a Channel

Requirement	Operational Mode		
	Master	Client Without Radar Detection	Client With Radar Detection
Non-Occupancy Period	Yes	Not required	Yes
DFS Detection Threshold	Yes	Not required	Yes
Channel Availability Check Time	Yes	Not required	Not required
U-NII Detection Bandwidth	Yes	Not required	Yes

Table 2: Applicability of DFS requirements during normal operation

Requirement	Operational Mode		
	Master	Client Without Radar Detection	Client With Radar Detection
DFS Detection Threshold	Yes	Not required	Yes
Channel Closing Transmission Time	Yes	Yes	Yes
Channel Move Time	Yes	Yes	Yes
U-NII Detection Bandwidth	Yes	Not required	Yes
Client Beacon Test	N/A	Yes	Yes

Additional requirements for devices with multiple bandwidth modes	Operational Mode	
	Master or Client With Radar Detection	**Client Without Radar Detection**
U-NII Detection Bandwidth and Statistical Performance Check	All BW modes must be tested	Not required
Channel Move Time and Channel Closing Transmission Time	Test using widest BW mode available	Test using the widest BW mode available for the link
All other tests	Any single BW mode	Not required

Note

Frequencies selected for statistical performance check should include several frequencies within the radar detection bandwidth and frequencies near the edge of the radar detection bandwidth. For 802.11 devices it is suggested to select frequencies in each of the bonded 20 MHz channels and the channel center frequency.

3.2 DFS Response requirement values

Parameter	Value
Non-occupancy period	Minimum 30 minutes
Channel Availability Check Time	60 seconds
Channel Move Time	10 seconds See Note 1.
Channel Closing Transmission Time	200 milliseconds + an aggregate of 60 milliseconds over remaining 10 second period. See Notes 1 and 2.
U-NII Detection Bandwidth	Minimum 100% of the 99% power bandwidth See Note 3.

Note 1: The instant that the *Channel Move Time* and the *Channel Closing Transmission Time* begins is as follows:

- For the Short pulse radar Test Signals this instant is the end of the *Burst*.
- For the Frequency Hopping radar Test Signal, this instant is the end of the last radar *Burst* generated.
- For the Long Pulse radar Test Signal this instant is the end of the 12 second period defining the radar transmission.

Note 2: The *Channel Closing Transmission Time* is comprised of 200 milliseconds starting at the beginning of the *Channel Move Time* plus any additional intermittent control signals required to facilitate *Channel* changes (an aggregate of 60 milliseconds) during the remainder of the 10 second period. The aggregate duration of control signals will not count quiet periods in between transmissions.

Note 3: During the *U-NII Detection Bandwidth* detection test, radar type 0 is used and for each frequency step the minimum percentage of detection is 90%. Measurements are performed with no data traffic.

3.3 Short Pulse Radar Test Waveforms

As the EUT is a Client Device with no Radar Detection, only one type radar pulse is required for the testing. Radar Pulse type 0 was used in the evaluation of the Client device for the purpose of measuring the Channel Move Time and the Channel Closing Transmission Time.

Radar Type	Pulse Width (μsec)	PRI (μsec)	Number of Pulses	Minimum Percentage of Successful Detection	Minimum Trials
0	1	1428	18	60%	30
1	1	Test A Test B	$\text{Roundup}\left\{\left(\frac{1}{360}\right)\cdot\left(\frac{19\cdot 10^6}{\text{PRI}_{\mu\text{sec}}}\right)\right\}$	60%	30
2	1-5	150-230	23-29	60%	30
3	6-10	200-500	16-18	60%	30
4	11-20	200-500	12-16	60%	30
Aggregate (Radar Types 1-4)				80%	120
Note 1: Short Pulse Radar Type 0 should be used for the detection bandwidth test, channel move time, and channel closing time tests.					

Test A: 15 unique PRI values randomly selected from the list of 23 PRI values in Table 5a
Test B: 15 unique PRI values randomly selected within the range of 518-3066 μsec, with a minimum increment of 1 μsec, excluding PRI values selected in Test A

A minimum of 30 unique waveforms are required for each of the short pulse radar types 2 through 4. For short pulse radar type 1, the same waveform is used a minimum of 30 times. If more than 30 waveforms are used for short pulse radar types 2 through 4, then each additional waveform must also be unique and not repeated from the previous waveforms.

If more than 30 waveforms are used for Short Pulse Radar Type 1, then each additional waveform is generated with Test B and must also be unique and not repeated from the previous waveforms in Tests A or B.

The aggregate is the average of the percentage of successful detections of short pulse radar types 1-4.

3.4 Long Pulse Radar Test Waveform

Radar Type	Pulse Width (μsec)	Chirp Width (MHz)	PRI (μsec)	Number of Pulses per Burst	Number of Bursts	Minimum Percentage of Successful Detection	Minimum Number of Trials
5	50-100	5-20	1000-2000	1-3	8-20	80%	30

The parameters for this waveform are randomly chosen. Thirty unique waveforms are required for the Long Pulse Radar Type waveforms. If more than 30 waveforms are used for the Long Pulse Radar Type waveforms, then each additional waveform must also be unique and not repeated from the previous waveforms.

3.5 Frequency Hopping Radar Test Waveform

Radar Type	Pulse Width (μsec)	PRI (μsec)	Pulses per Hop	Hopping Rate (kHz)	Hopping Sequence Length (msec)	Minimum Percentage of Successful Detection	Minimum Number of Trials
6	1	333	9	0.333	300	70%	30

For the Frequency Hopping Radar Type, the same Burst parameters are used for each waveform. The hopping sequence is different for each waveform and a 100-length segment is selected from the hopping sequence defined by the following algorithm:

The first frequency in a hopping sequence is selected randomly from the group of 475 integer frequencies from 5250 – 5724 MHz. Next, the frequency that was just chosen is removed from the group and a frequency is randomly selected from the remaining 474 frequencies in the group. This process continues until all 475 frequencies are chosen for the set. For selection of a random frequency, the frequencies remaining within the group are always treated as equally likely.

4 Calibration Setup and DFS Test Results

4.1 Calibration of Radar Waveform

4.1.1 Radar Waveform Calibration Procedure

The Interference **Radar Detection Threshold Level** is *(-62dBm)* + *(-0.6)* [dBi]+ 1 dB= -61.6dBm that had been taken into account the output power range and antenna gain. The following equipment setup was used to calibrate the radiated Radar Waveform. A vector signal generator was utilized to establish the test signal level for radar type 0. During this process there were no transmissions by either the Master or Client Device. The spectrum analyzer was switched to the zero span (Time Domain) at the frequency of the Radar Waveform generator. Peak detection was used. The spectrum analyzer resolution bandwidth (RBW) and video bandwidth (VBW) were set to 3 MHz to measure the type 0 radar waveform. Capture the spectrum analyzer plots on short pulse radar waveform.

4.1.2 Radar Waveform Calibration Result

Please Refer to Appendix Of this test report.

4.2 In-Service Monitoring: Channel Move Time, Channel Closing Transmission Time and Non-Occupancy Period

4.2.1 Limit of In-Service Monitoring

The EUT has In-Service Monitoring function to continuously monitor the radar signals, If radar is detected, it must leave the channel (Shutdown). The Channel Move Time to cease all transmissions on the current Channel upon detection of a Radar Waveform above the DFS Detection Threshold within 10 sec. The total duration of Channel Closing Transmission Time is comprised of 200 milliseconds starting at the beginning of the Channel Move Time plus any additional intermittent control signals required to facilitate Channel changes (an aggregate of 60 milliseconds) during the remainder of the 10 second period. The aggregate duration of control signals will not count quiet periods in between transmissions.

Non-Occupancy Period time is 30 minute during which a Channel will not be utilized after a Radar Waveform is detected on that Channel. The non-associated Client Beacon Test is during the 30 minutes observation time. The EUT should not make any transmissions in the DFS band after EUT power up.

4.2.2 Test Procedures

1. The radar pulse generator is setup to provide a pulse at frequency that the Master and Client are operating. A type 0 radar pulse with a 1us pulse width and a 1428 us PRI is used for the testing.
2. The vector signal generator is adjusted to provide the radar burst (18 pulses) at a level of approximately -62dBm at the antenna of the Master device.
3. A trigger is provided from the pulse generator to the DFS monitoring system in order to capture the traffic and the occurrence of the radar pulse.
4. A U-NII device operating as a Client Device will associate with the Master at Channel. The MPEG file "TestFile.mpg" specified by the FCC is streamed from the "file computer" through the Master to the Client Device and played in full motion video using Media Player Classic Ver. 6.4.8.6 in order to properly load the network for the entire period of the test.
5. When a radar Burst with a level equal to the DFS Detection Threshold + 1dB is generated on the Operating Channel of the U-NII device. At time T0 the Radar Waveform generator sends a Burst of pulse of the radar waveform at Detection Threshold + 1dB.
6. Observe the transmissions of the EUT at the end of the radar Burst on the Operating Channel. Measure and record the transmissions from the EUT during the observation time (Channel Move Time). One 12 seconds plot is reported for the Short Pulse Radar Types 1. The plot for the Short Pulse Radar Types start at the end of the radar burst. The Channel Move Time will be calculated based on the zoom in 600ms plot of the Short Pulse Radar Type.

7. Measurement of the aggregate duration of the Channel Closing Transmission Time method. With the spectrum analyzer set to zero span tuned to the center frequency of the EUT operating channel at the radar simulated frequency, peak detection, and max hold, the dwell time per bin is given by: **Dwell (0.4ms)= S (12000ms) / B (30000)**; where Dwell is the dwell time per spectrum analyzer sampling bin, S is the sweep time and B is the number of spectrum analyzer sampling bins. An upper bound of the aggregate duration of the intermittent control signals of Channel Closing Transmission Time is calculated by: **C (ms)= N X Dwell (0.4 ms)**; where C is the Closing Time, N is the number of spectrum analyzer sampling bins (intermittent control signals) showing a U-NII transmission and Dwell is the dwell time per bin.

   Measure the EUT for more than 30 minutes following the channel move time to verify that no transmissions or beacons occur on this Channel.

4.2.3 Result of Channel Move Time, Channel Closing Transmission Time and Non-Occupancy Period for Client Beacon Test

Please Refer to Appendix Of this test report.

4.2.4 Channel Move Time, Channel Closing Transmission Time and Non-Occupancy Period for Client Beacon Test Plots

Please Refer to Appendix Of this test report.

5 List of Measuring Equipment

Instrument	Manufacturer	Model No.	Serial No.	Calibration Date	Due Date	Remark
Spectrum Analyzer	KEYSIGHT	N9010A-544	MY54510355	May. 14,22	May. 13,23	Conducted
MXG Analog Microvave Signal Generator (Blocker)	KEYSIGHT	N5183A	MY50143024	Feb. 18,22	Feb. 17,23	Conducted
Signal Generator (Interferer)	KEYSIGHT	N5182B	MY56200114	Feb. 15,22	Feb. 14,23	Conducted
Test Software	JS1120-3	3.2.06	N/A	N/A	N/A	Conducted

6 APPENDIX

DFS Detection Thresholds

Test Result

TestMode	Frequency[dbm]	Radar Type	Result	Limit[dbm]	Verdict
11AC80SISO	5290	Type0	-63.76	-63.40	PASS
	5530	Type0	-63.84	-63.40	PASS

Test Graphs

11AC80SISO_5290_Type0
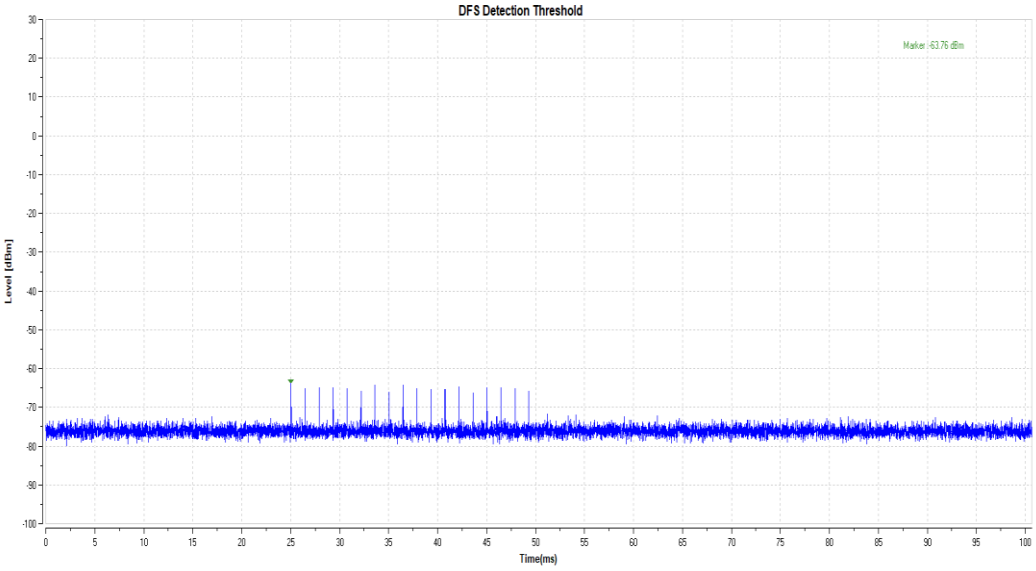

11AC80SISO_5530_Type0
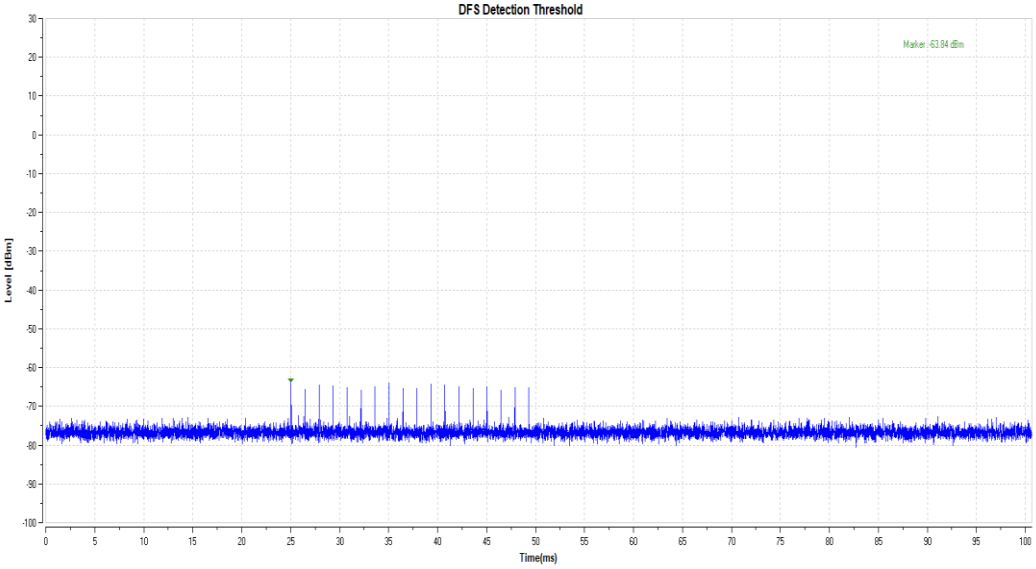

Channel Move Time and Channel Closing Transmission Time

Test Result

TestMode	Frequency[MHz]	CCTT[ms]	Limit[ms]	CMT[ms]	Limit[ms]	Verdict
11AC80SISO	5290	200+11.7	200+60	792.7	10000	PASS
	5530	200+14.3	200+60	905.8	10000	PASS

Test Graphs

11AC80SISO_5290

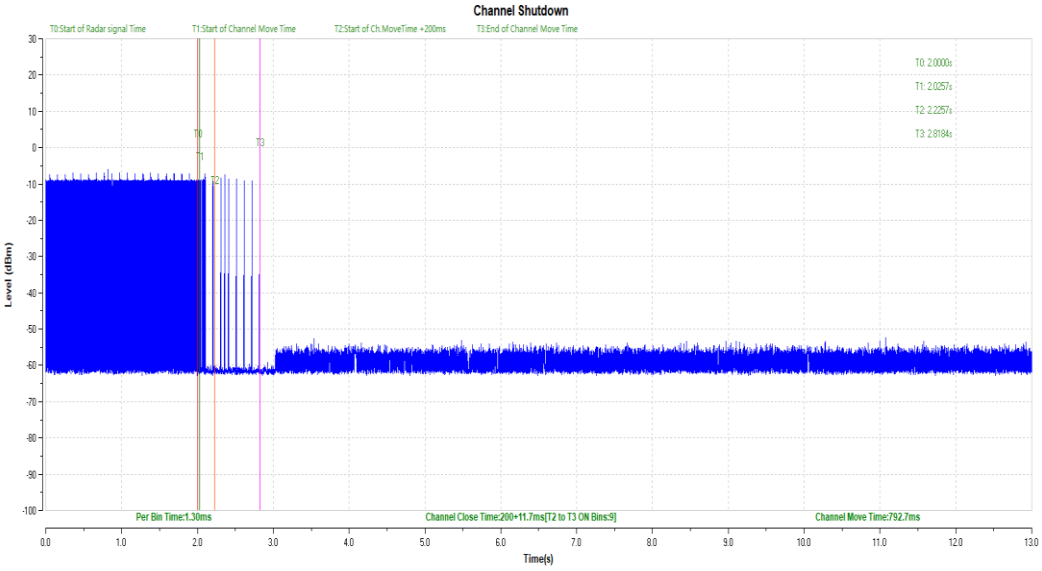

11AC80SISO_5530

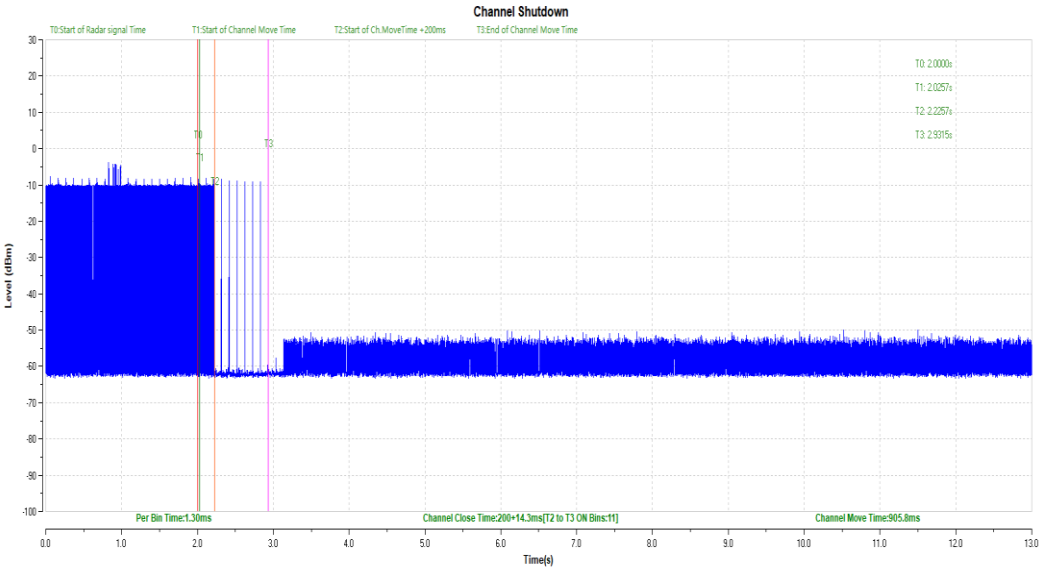

Non-Occupancy Period

Test Result

TestMode	Frequency[MHz]	Result	Limit[s]	Verdict
11AC80SISO	5290	see test graph	≥1800	PASS
	5530	see test graph	≥1800	PASS

Test Graphs

11AC80SISO_5290
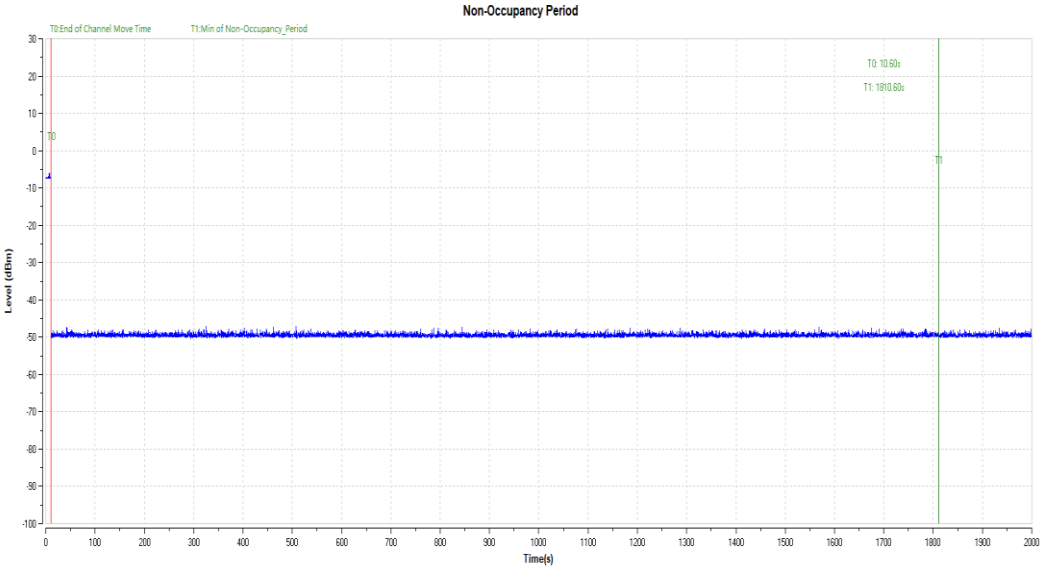

11AC80SISO_5530
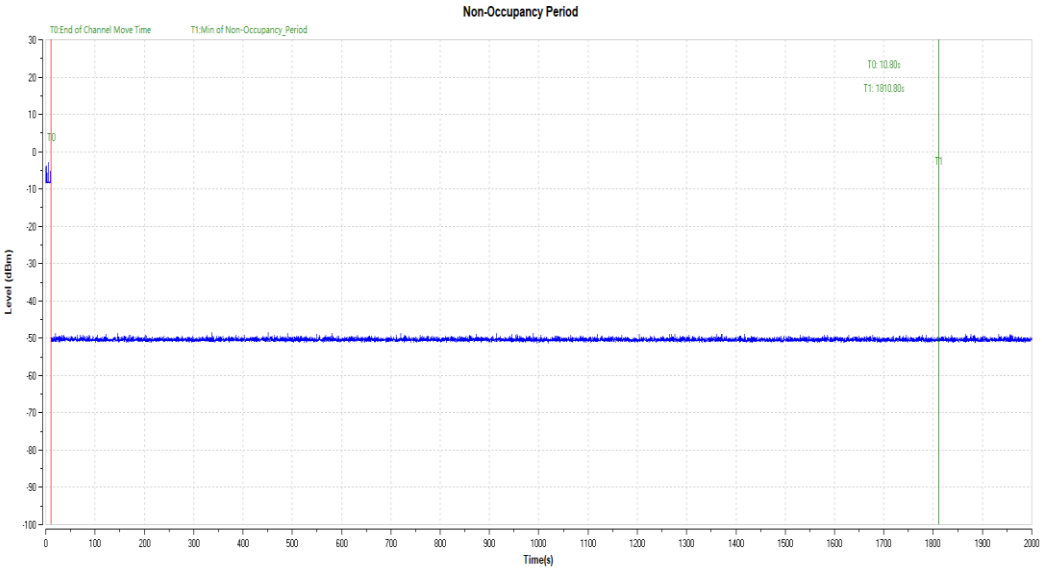

----------End of the report----------