User´s manual
FLIR Scout Pro

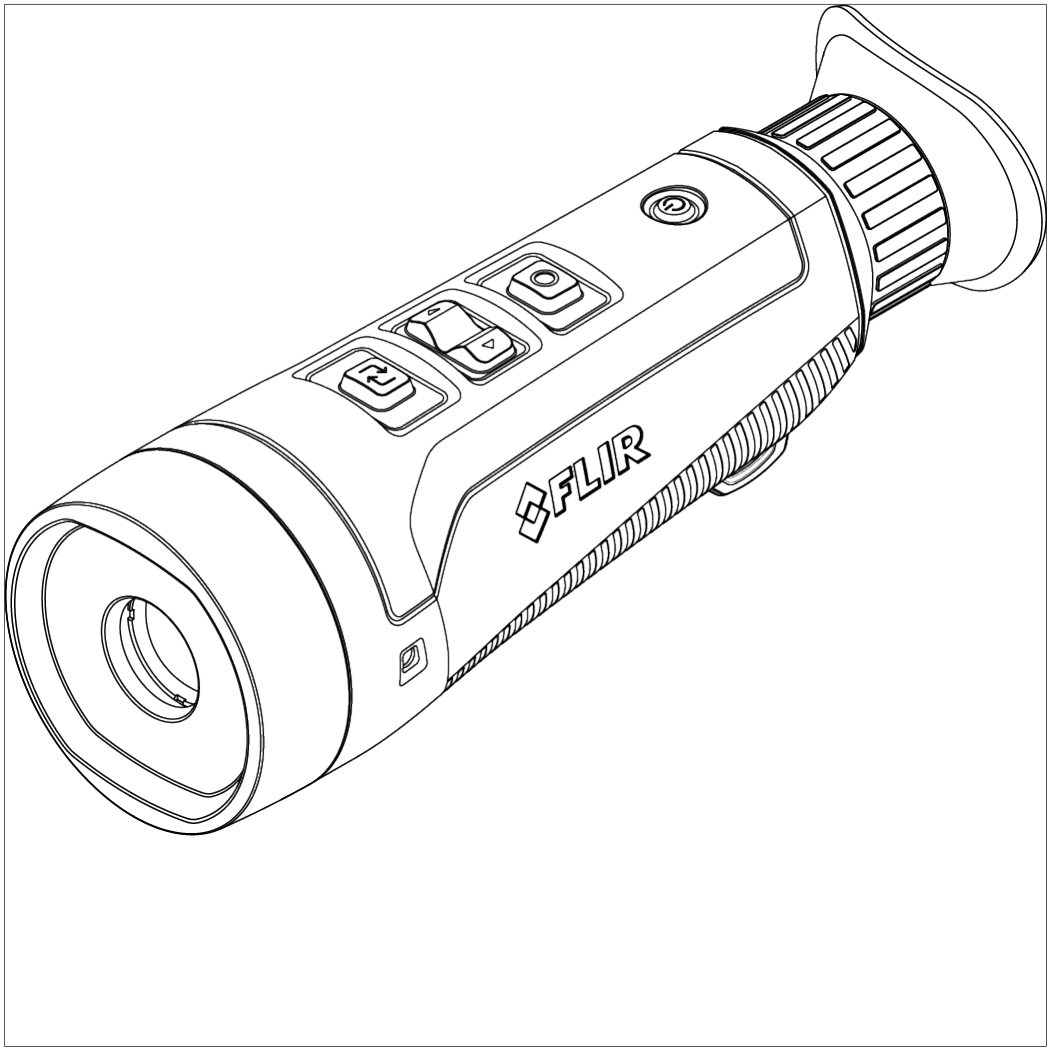

Table of contents

1 Safety information ... 1
1.1 Electro Magnetic Compatibility, EMC ... 1
1.1.1 FCC/IC ... 1
1.1.2 JPN and CAN ... 1
1.2 Handling and operation ... 1
1.3 Battery and charging ... 2
1.4 Declaration of conformity ... 2
2 Notice to user ... 3
2.1 Register your camera ... 3
2.2 Online documentation ... 3
2.3 About this manual ... 3
2.4 Support ... 3
2.5 Training ... 3
3 Getting started ... 4
4 Camera parts ... 5
5 Camera user interface ... 6
5.1 Main toolbar ... 6
5.1.1 Menu system ... 6
5.2 Diopter adjustment ... 6
5.3 Status icons and indicators ... 7
6 Basic operation ... 8
6.1 Charge the camera ... 8
6.2 Power on/off ... 8
6.2.1 Power on ... 8
6.2.2 Power off ... 8
6.2.3 Inactivity ... 8
6.2.4 Standby ... 8
6.2.5 Reset ... 8
6.3 Capture an image or video ... 8
6.4 Save an image or video ... 8
6.5 File transfer ... 9
6.6 Storage ... 9
6.7 Delete files from camera ... 9
7 Palettes ... 10
8 FLIR Scout Pro app ... 11
8.1 Connect the camera to the app ... 11
8.2 Transfer the files via the app ... 11
8.3 Delete files ... 11
9 Maintenance and cleaning ... 12
9.1 Calibration ... 12
9.2 Clean the camera ... 12
9.2.1 Camera housing, cables, and other items ... 12
9.2.2 Infrared lens ... 12
10 Updating the camera ... 13
10.1 Update via USB cable with the FLIR Camera Updater ... 13
10.1.1 Install the FLIR Camera Updater ... 13
10.1.2 Connect the camera ... 13
10.1.3 Update notifications ... 13
11 Disposal of electronic waste ... 14
12 Disclaimers ... 15
12.1 Legal disclaimer ... 15
12.2 Export controls ... 15
12.3 Patents ... 15

12.4 Quality assurance 15
12.5 Third-party licenses 15
12.6 Usage statistics 15
12.7 Copyright 15

1 Safety information

1.1 Electro Magnetic Compatibility, EMC

1.1.1 FCC/IC

WARNING

This device complies with Part 15 of the FCC Rules and with Industry Canada licence-exempt RSS standard(s). Operation is subject to the following two conditions:

1. this device may not cause harmful interference, and
2. this device must accept any interference received, including interference that may cause undesired operation.

CAUTION

This portable transmitter with its antenna has shown compliance with FCC's SAR limits for general population / uncontrolled exposure. The maximum listed SAR level is 1.24 W/kg (head) and 1.24 W/kg (body) at 0 mm. The antenna used for this device must not be re-located or operating in conjunction with any other antenna or transmitter.

1.1.2 JPN and CAN

WARNING

The 5 GHz band is only allowed for indoor use in Japan and Canada.

WARNING

This equipment contains specified radio equipment that has been certified to the Technical Regulation Conformity Certification under the Japanese Radio Law. 当該機器には電波法に基づく、技術基準適合証明等を受けた特定無線設備を装着している。

WARNING

The users manual or instruction manual for an intentional or unintentional radiator shall caution the user that changes or modifications not expressly approved by the party responsible for compliance could void the user's authority to operate the equipment. In cases where the manual is provided only in a form other than paper, such as on a computer disk or over the Internet, the information required by this section may be included in the manual in that alternative form, provided the user can reasonably be expected to have the capability to access information in that form.

1.2 Handling and operation

CAUTION

Do not use the camera in temperatures more than 55°C (131°F), unless other information is specified in the user documentation or technical data. High temperatures can cause damage to the camera.

CAUTION

If you do not obey these Cautions, damage to the equipment can occur.

Protect the camera and accessories from dirt, dust, impacts, and liquids.

Only use the accessories and spare parts that FLIR provides.

Do not disassemble the camera.

Do not use a damaged camera, or accessories.

CAUTION

Do not point the infrared camera (with or without the lens cover) at strong energy sources, for example, devices that cause laser radiation, or the sun. This can have an unwanted effect on the accuracy of the camera. It can also cause damage to the detector in the camera.

CAUTION
Be careful and use only minimum force to clean the infrared lens. The lens has an anti-reflective coating which is easily damaged. Damage to the infrared lens can occur.

1.3 Battery and charging

CAUTION
The temperature range in which you can charge the battery is ±0°C to 45°C (32°F to 113°F).

WARNING
Do not remove the battery from the product. Do not disassemble or crush battery cells and battery packs.

CAUTION
Do not store a battery/camera longer than 1 month in a discharged state. Do not store a battery/camera for more than 1 year without recharge.

1.4 Declaration of conformity

The full text of the Declaration of conformity is available at the following internet address: https://support.flir.com/resources/dnan.

2 Notice to user

2.1 Register your camera

Register your camera to receive an extended warranty and other related benefits.

To register the camera, go to http://support.flir.com/camreg.

To access the registration form, you must log in to your FLIR account or register for a new account. You also need the serial number of your camera. The serial number is displayed on the camera body.

2.2 Online documentation

Our manuals are continuously updated and published online.

To access the FLIR Scout Pro series user manual and other product documentation, go to https://support.flir.com/resources/dnan.

To access the manuals for our other products, as well as manuals for our discontinued products, go to https://support.flir.com/resources/app.

2.3 About this manual

FLIR Systems issues generic manuals that cover several models within a camera series. This means that this manual may contain descriptions and explanations that do not apply to your particular camera model.

The authoritative version of this publication is English. In the event of divergences due to translation errors, the English text has precedence. Any late changes are first implemented in English.

2.4 Support

Contact our Technical Support Center if you experience problems or have any questions about your product: https://support.flir.com.

2.5 Training

For training resources and courses, go to https://www.flir.com/support-center/training.

3 Getting started

Note Before operating the camera, you must read, understand, and follow the warnings and cautions in section 1 *Safety information*.

Note To make changes to the camera settings after the camera has been set up, the camera must be reset. See 6.2.5 *Reset*.

1. Charge the camera. A USB-C 15W power supply unit is recommended.
2. Press the Power button to start the camera.
3. Adjust the camera settings to your liking.
4. The FLIR Scout Pro camera is ready to use.

Note To get the most out of your camera, we strongly recommend to download the app for the FLIR Scout Pro camera. See section 8.1 *Connect the camera to the app*.

4 Camera parts

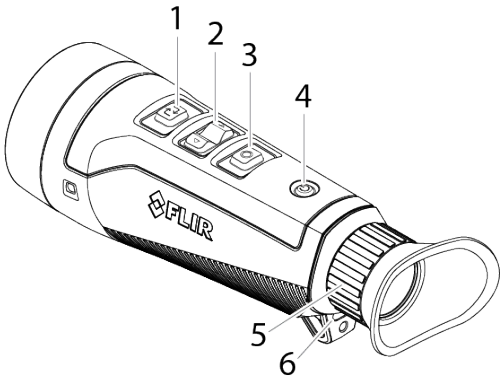

1. Option
2. Left/Right
3. Trigger
4. Power
5. Diopter
6. USB-C port

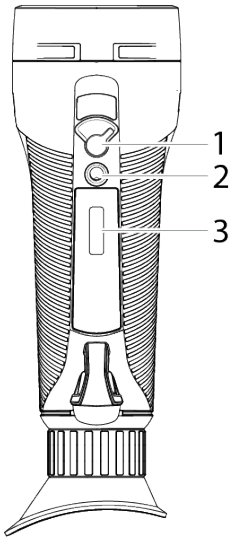

1. Connectivity switch
2. Tripod mount
3. Serial number

5 Camera user interface

5.1 Main toolbar

1. Zoom
2. Brightness
3. Palettes

5.1.1 Menu system

- Zoom:
  - Press the Option button to display the menu. Zoom is selected by default as the first option.
  - Adjust the zoom level with the Left/Right button.
- Brightness:
  - Press the Option button to get to the second option, Brightness.
  - Adjust the brightness level with the Left/Right button.
- Palettes:
  - Press the Option button to get to the third option, Palettes.
  - Adjust palettes with the Left/Right button.

5.2 Diopter adjustment

The diopter adjustment allows the user to change the viewfinder to suit their vision for image sharpness. Look through the camera and turn the diopter adjustment ring until text and graphics are sharp.

5.3 Status icons and indicators

	Charging
	Battery state
	GPS on
	GPS off
	Menu: Zoom
	Menu: Brightness
	Menu: Palettes
	Option symbol
	Memory full
	Trigger symbol
	USB connection
	Connectivity on
	Connectivity off
	Showing passkey
	Phone connected

6 Basic operation

Note Before operating the camera, you must read, understand, and follow the warnings and cautions in section 1 *Safety information*.

6.1 Charge the camera

⚠ **CAUTION**
When you connect the power supply to a mains socket, select a socket that is easy to access. Should a hazardous situation occur, you must be able to easily disconnect the power supply.

Note It is good practice to disconnect the power supply from the mains socket when not in use.

To charge the camera:

1. Connect the power supply to a wall outlet.
2. Connect the power supply to the charging port of the FLIR Scout Pro camera.

6.2 Power on/off

6.2.1 Power on

To power on the FLIR Scout Pro camera, press the Power button for 1 second.

6.2.2 Power off

To power off the FLIR Scout Pro camera, press and hold the Power button until the screen turns off.

6.2.3 Inactivity

After 30 minutes of inactivity the camera goes into sleep mode. Interaction will stop the camera from going into sleep mode.

6.2.4 Standby

A short press of the Power button puts the camera in standby mode.

6.2.5 Reset

To reset the camera, press and hold the Power button and the Option button at the same time for 5 seconds.

6.3 Capture an image or video

- A short press of the Trigger button captures an image. A thumbnail image is displayed for a saved image.
- A long press of the Trigger button starts the video recording. The video recording is indicated with a red dot and elapsed time.
- Press the Trigger button to stop the video recording.

6.4 Save an image or video

The images and videos are saved on the FLIR Scout Pro camera.

Captured images and videos can be viewed in the FLIR Scout Pro app.

6.5 File transfer

To transfer the files via a USB cable, do the following:

1. Connect the camera with a computer, using a USB cable.
2. Power on the camera.
3. Transfer the files to the computer using a drag-and-drop operation.

To transfer files from the camera with the app, see section 8.2 *Transfer the files via the app*.

6.6 Storage

The storage space on the camera is 16 GB. When the storage space on the camera is full, the files are automatically overwritten, starting with the oldest files. To prevent files from being overwritten, be sure to clear the files from time to time.

6.7 Delete files from camera

To delete files from the camera, open the app or connect the camera to a computer with USB, select the files you want to delete or delete all.

7 Palettes

The camera supports the following palettes:

- *White Hot*: White Hot displays warmer objects in white and cooler objects in black. Grayscale palettes offer simplicity for scenes with a wide temperature span and generate images with realistic details. The versatility of White Hot makes it appealing for use in shifting landscapes and urban areas.
- *Black Hot*: Black Hot is the inverted version of White Hot and displays warmer objects in black and cooler objects in white. Black Hot displays body heat in a clear, lifelike image.
- *Sepia*: Sepia applies a warm, golden hue to the White Hot palette for reduced eye and mental fatigue, ideal for instances of prolonged thermal surveillance or scouting. Sepia´s narrow visual spectrum also limits light emitted from the viewfinder during covert operations.
- *Heat*: Heat was designed for one purpose — quickly detecting body heat. Highlighting the warmest 10% of a scene in red, it is best suited for high-contrast environments and offers enhanced body heat detection at night.

White Hot

Black Hot

Sepia

Heat

8 FLIR Scout Pro app

Note Visit App Store to download the FLIR Scout Pro app.

8.1 Connect the camera to the app

1. Make sure the app is installed on the mobile device.
2. Press the Power button to start the camera.
3. Make sure the Connectivity switch is turned on.
4. Place the camera close to the mobile device.
5. Start the FLIR Scout Pro app on the mobile device.
6. The FLIR Scout Pro app guides you how to connect the camera with the mobile device.

8.2 Transfer the files via the app

1. Open the FLIR Scout Pro app on the mobile device.
2. Go to Camera storage.
3. Choose to import selected or import all.

Note Importing the files from the camera does not delete the files on the camera.

8.3 Delete files

1. Open the FLIR Scout Pro app on the mobile device.
2. Go to Camera storage.
3. Choose to delete selected or delete all.

9 Maintenance and cleaning

9.1 Calibration

We recommend that you send in the camera for calibration once a year. Contact your local sales office for instructions on where to send the camera.

9.2 Clean the camera

9.2.1 Camera housing, cables, and other items

Use one of these liquids:

- Warm water
- A weak detergent solution

Equipment:

- A soft cloth

Follow this procedure:

1. Soak the cloth in the liquid.
2. Twist the cloth to remove excess liquid.
3. Clean the part with the cloth.

CAUTION

Do not apply solvents or similar liquids to the camera, the cables, or other items. This can cause damage.

9.2.2 Infrared lens

Use one of these liquids:

- A commercial lens cleaning liquid with more than 30% isopropyl alcohol.
- 96% ethyl alcohol (C_2H_5OH).

Equipment:

- Cotton wool

CAUTION

If you use a lens cleaning cloth it must be dry. Do not use a lens cleaning cloth with the liquids that are listed above. These liquids can cause material on the lens cleaning cloth to become loose. This material can have an unwanted effect on the surface of the lens.

Follow this procedure:

1. Soak the cotton wool in the liquid.
2. Twist the cotton wool to remove excess liquid.
3. Clean the lens one time only and discard the cotton wool.

WARNING

Make sure that you read all applicable MSDS (Material Safety Data Sheets) and warning labels on containers before you use a liquid: the liquids can be dangerous.

CAUTION

- Be careful when you clean the infrared lens. The lens has a delicate anti-reflective coating.
- Do not clean the infrared lens too vigorously. This can damage the anti-reflective coating.

10 Updating the camera

To take advantage of our latest camera firmware, it is important that you keep your camera updated.

- Connect the camera to a computer with a USB cable and use the FLIR Camera Updater application to update the camera.
- Navigate to the firmware section of the app to check for new updates. If an update is available, you can download and install it directly on the camera.
  For more information, go to https://support.flir.com.

10.1 Update via USB cable with the FLIR Camera Updater

The FLIR Camera Updater is a Windows application used to update the camera.

To update your camera, you must log in to your FLIR account or sign up for a new account. You must also register the camera.

10.1.1 Install the FLIR Camera Updater

1. Go to https://support.flir.com. Find the software download area and search for FLIR Camera Updater.
2. Download the FLIR Camera Updater installer package.
3. Start the installation by double-clicking the executable installer file.
4. Follow the instructions in the setup wizard.

10.1.2 Connect the camera

1. Connect the camera to the computer, using the USB cable.
2. Turn on the camera.
3. Run the FLIR Camera Updater application.
4. Sign in to your FLIR account or sign up for a new account.
5. The application automatically connects to the camera.
6. If the camera is not registered, select *Product registration* and complete the registration.
7. If a newer firmware version is available, you can select to update the connected camera.

10.1.3 Update notifications

The FLIR Camera Updater can send notifications if there is a new update available for your previously connected devices.

11 Disposal of electronic waste

Waste of Electrical and Electronic Equipment (WEEE) poses a risk to human health and the environment when not disposed of properly. This product should not be discarded as unsorted waste but must be sent to separate collection facilities for recovery and recycling. More information is available from the relevant local authority.

12 Disclaimers

12.1 Legal disclaimer

For warranty terms, refer to https://www.flir.com/warranty.

12.2 Export controls

Products described herein may be subject to export regulations.

This document does not contain export-controlled information.

12.3 Patents

This product is protected by patents, design patents, patents pending, or design patents pending. Refer to the FLIR Systems' patent registry:

https://www.flir.com/patentnotices

12.4 Quality assurance

The Quality Management System under which these products are developed and manufactured has been certified in accordance with the ISO 9001 standard.

FLIR Systems is committed to a policy of continuous development; therefore we reserve the right to make changes and improvements on any of the products without prior notice.

12.5 Third-party licenses

Information about third-party licenses is available in the user interface of the product.

12.6 Usage statistics

FLIR Systems reserves the right to gather anonymous usage statistics to help maintain and improve the quality of our software and services.

12.7 Copyright

© 2024 FLIR Systems, Inc. All rights reserved worldwide. No parts of the software including source code may be reproduced, transmitted, transcribed or translated into any language or computer language in any form or by any means, electronic, magnetic, optical, manual or otherwise, without the prior written permission of FLIR Systems.

The documentation must not, in whole or part, be copied, photocopied, reproduced, translated or transmitted to any electronic medium or machine readable form without prior consent, in writing, from FLIR Systems.

Names and marks appearing on the products herein are either registered trademarks or trademarks of FLIR Systems and/or its subsidiaries. All other trademarks, trade names or company names referenced herein are used for identification only and are the property of their respective owners.

Website
http://www.flir.com

Customer support
http://support.flir.com

Copyright
© 2024, FLIR Systems, Inc. All rights reserved worldwide.

Disclaimer
Specifications subject to change without further notice. Models and accessories subject to regional market considerations. License procedures may apply. Products described herein may be subject to US Export Regulations. Please refer to exportquestions@flir.com with any questions.

Publ. No.: T810643
Release: AB
Commit: 101018
Head: 101018
Language: en-US
Modified: 2024-12-10
Formatted: 2024-12-10