Title:

X-SDMAC-2832S+

Drawing Type :	User's Manual
Drawing No.:	JW204430XX
Date :	July 13, 2017

Revision history

Rev.	Description	Date	Prepared by	Checked by	Approved by
XX	The 1st draft version.	Jul.13,17	K.Yoshikawa	Y.Kuroda	Y.Shibuya

Index

1. Product introduction 4
2. Hardware block diagram 6
3. Board specifications 7
3.1. General specifications 7
3.2. Environmental conditions 7
3.3. Electrical specifications 8
3.4. Current consumption specifications 10
3.5. Wireless LAN general specifications 11
3.6. Wireless LAN transmitter specifications 13
3.7. Wireless LAN Receiver specifications 14
3.8. General specifications 16
3.9. Transmitter specifications 16
3.10. Receiver specifications 16
4. Signal pin specifications 17
4.1. Pin locations 17
4.2. Signal specifications 18
5. Mechanical Specifications 20
6. Indication specifications 21
7. System requirements and quick start guide 22
8. Notifications 24

This document describes about SX-SDMAC-2832S+. Hereinafter called “SX-SDMAC-2832”.

1. Product introduction

The SX-SDMAC-2832S+ is a 2.4 GHz / 5GHz dual band IEEE802.11 a/b/g/n/ac Wave2 WLAN combo radio module based on Qualcomm QCA9377-3 chipset. The SX-SDMAC-2832+ highly integrates MAC, Base band, RF, RF front end and peripheral circuitry like power unit, reference clock, etc.
The SX-SDMAC-2832+ has a MHF-I connector as connection interface for an add-on antenna.

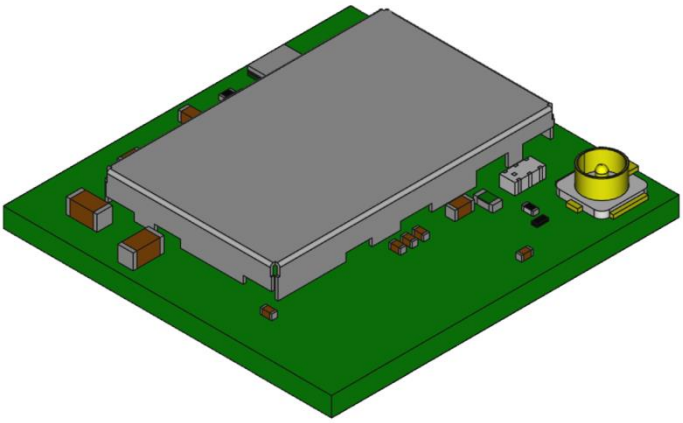

SX-SDMAC-2832S+

Features

- IEEE802.11a/b/g/n/ac Wave2 compliant (2.4 GHz, 5 GHz)

- 1 spatial data stream system (1T1R)

- 5 GHz : Support 20/40/80 MHz bandwidth mode
  2.4 GHz : Support 20/40 MHz bandwidth mode
  *20/40MHz Co-existence is not supported.

  PHY Data Rate
  - 802.11b/g 1-54 Mbps
  - 802.11a 6-54 Mbps
  - 802.11n MCS0-7 High Speed mode (HT mode)
  - 802.11ac MCS0-9 Very High Speed mode (VHT mode)

- SDIO3.0 as the Wireless LAN host interface

- UART as the host interface

- +3.3V main power supply and selectable +1.8V/+3.3V IO power supply

- EU RoHS directive 2011/65/EC (Lead Free), (EU)/2015/863 compliant

2. Hardware block diagram

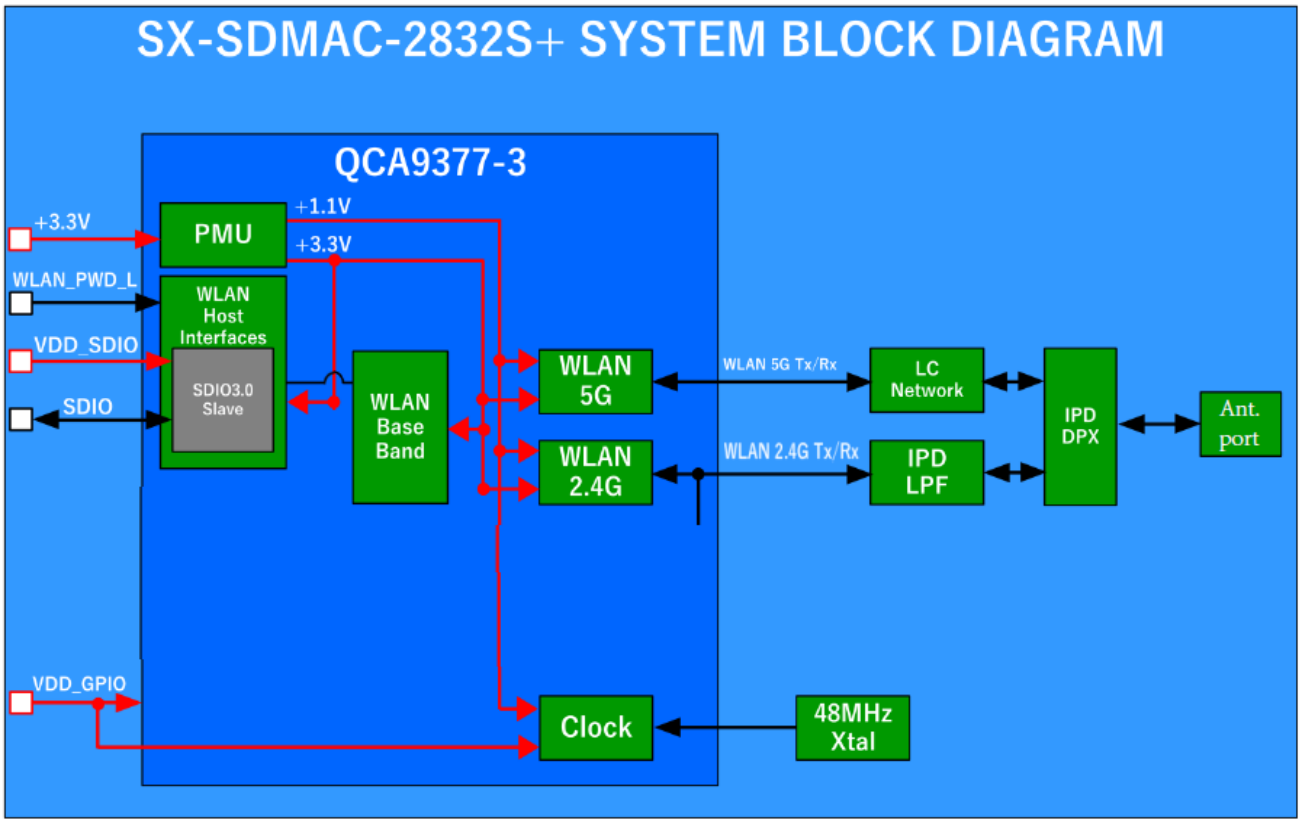

Acronyms

PMU	Power Management Unit
IPD LPF	Integrated Passive Device type Low Pass Filter
IPD DPX	Integrated Passive Device type Diplexer
MHF-I	MHF-I co-axial connector (I-PEX) or compatible connector

3. Board specifications

3.1. General specifications

Items	Specifications		Units	Remarks
Connection with the host board	44-pin Land Grid Array (Direct solder)		–	
Antenna port	MHF1 connector x1		pc	
Host interface	SDIO v3.0		–	For Wireless LAN
	UART		–	
RF interface	IEEE802.11a/b/g/n/ac		–	IEEE802.11-2012 IEEE802.11ac-2013
			–	
Dimensions	W x H x D	17.0 x 18.0 x 2.6	mm	

3.2. Environmental conditions

Items	Specifications			Units	Remarks
	Min.	Typ.	Max.		
Recommended operating temperature	-20	–	+85	℃	Ambient temperature
Recommended operating humidity	15	–	93	%RH	No condensing
Recommended strage temperature	-20	–	+95	℃	Ambient temperature
Recommended strage humidity	10	–	95	%RH	No condensing

3.3. Electrical specifications

Absolute maximum rating

Items	Specifications			Units	Remarks
	Min.	Typ.	Max.		
Main power supply (VDD)	-0.30	–	+3.65	V	
IO power supply voltage (VDD_GPIO_1, VDD_GPIO_2)	-0.30	–	+4.00	V	
SDIO power supply voltage (VDD_SDIO)	-0.30	–	+4.00	V	

Recommended operating conditions

Main power supply

Items	Specifications			Units	Remarks
	Min.	Typ.	Max.		
Main power supply (VDD)	+3.135	+3.30	+3.465	V	

IO power supply/SDIO power supply with +3.3V operation

Items	Specifications			Units	Remarks
	Min.	Typ.	Max.		
IO power supply voltage (VDD_GPIO_1, VDD_GPIO_2)	+3.14	+3.30	+3.46	V	
SDIO power supply voltage (VDD_SDIO)	+3.14	+3.30	+3.46	V	

IO power supply/SDIO power supply with +1.8V operation

Items	Specifications			Units	Remarks
	Min.	Typ.	Max.		
IO power supply voltage (VDD_GPIO_1, VDD_GPIO_2)	+1.71	+1.80	+1.89	V	
SDIO power supply voltage (VDD_SDIO)	+1.71	+1.80	+1.89	V	

※All voltage source for the analog RF power supply is internally regulated in the module, and RF performance described in this document is not affected by any variation for external power source.

Digital logic signal level

1) V_{IO} (VDD_GPIO_1, VDD_GPIO_2, VDD_SDIO) = +3.3V operation

Items	Parameters	Specifications				Units	Remarks
		Output/Input current	Min.	Typ.	Max.		
V_{IH}	Input High voltage	–	0.7 x V_{IO}	+3.3	V_{IO} + 0.3	V	
V_{IL}	Input Low voltage	–	-0.3	–	0.3 x V_{IO}	V	
V_{OH}	Output High voltage	I_{OH} = 3mA	V_{IO} - 0.4	–	–	V	
V_{OL}	Output Low voltage	I_{OL} = -11mA	–	–	0.1 x V_{IO}	V	

2) V_{IO} (VDD_GPIO_1, VDD_GPIO_2, VDD_SDIO) = +1.8V operation

Items	Parameters	Specifications				Units	Remarks
		Output/Input current	Min.	Typ.	Max.		
V_{IH}	Input High voltage	–	0.7 x V_{IO}	+1.8	V_{IO} + 0.2	V	
V_{IL}	Input Low voltage	–	-0.3	–	0.3 x V_{IO}	V	
V_{OH}	Output High voltage	I_{OH} = 3mA	V_{IO} - 0.4	–	V_{IO}	V	
V_{OL}	Output Low voltage	I_{OL} = -11mA	–	–	0.1 x V_{IO}	V	

3.4. Current consumption specifications

VDD (WLAN Operation)

Items	Specifications				Units	Remarks
	Mode	Standards	Typ.	Max.		
Current consumption 2.4GHz	Tx	11b	280	430	mA	
		11g	280	430	mA	
		11ng HT20	280	430	mA	
		11ng HT40	280	430	mA	
	Rx	All mode	70	90	mA	
Current consumption 5GHz	Tx	11a	480	630	mA	
		11na HT20	480	630	mA	
		11na HT40	480	630	mA	
		11ac VHT80	480	630	mA	
	Rx	All mode	90	110	mA	

3.5. Wireless LAN general specifications

Items	Specifications				Units	Remarks
Chipset	QCA9377-3 (Qualcomm Atheros)				–	
Operating frequencies	Band	Modes	Min	Max		
	2.4GHz	11b	2412	2462	MHz	
		11g/n/ac 20MHz	2412	2462	MHz	
		11g/n/ac 40MHz	2422	2452	MHz	
	5GHz	11a/n/ac 20MHz	5180	5825	MHz	
		11n/ac 40MHz	5190	5795	MHz	
		11ac 80MHz	5210	5775	MHz	
Frequency steps	2.4GHz	11b/g/n	5		MHz	
	5GHz	11a/n/ac 20MHz	20		MHz	
		11n/ac 40MHz	40		MHz	
		11ac 80MHz	80		MHz	
Data rates	11b	1,2,5.5L,5.5S,11L,11S			Mbps	
	11a/g	6,9,12,18,24,36,48,54			Mbps	
	11n	MCS 0,1,2,3,4,5,6,7			–	
	11ac	MCS 0,1,2,3,4,5,6,7,8,9			–	
Modulation types	11b	DSSS(DBPSK,DQPSK,CCK)			–	
	11a/g/n	OFDM(BPSK,QPSK,16QAM,64QAM)			–	
	11ac	OFDM(BPSK,QPSK,16QAM,64QAM,256QAM)			–	

Operatable channel list

2.4GHz	US/CA	20MHz	Ch.1, 2, 3, 4, 5, 6, 7, 8, 9, 10, 11(13 for EU)
		40MHz	Ch.3, 4, 5, 6, 7, 8, 9(11 for EU)
5GHz	US	20MHz	Ch.36,40,44,48,52,56,60,64,100,104,108,112,116,120,124,128,132,136,140,149,153,157,161,165
		40MHz	Ch.38,46,54,62,102,110,118,126,134,151,159
		80MHz	Ch.42,58,106,122,155
	CA	20MHz	Ch.36,40,44,48,52,56,60,64,100,104,108,112,116,132,136,140,145,149,153,157,161,165
		40MHz	Ch.38,46,54,62,102,110,134,151,159
		80MHz	Ch.42,58,106,155

Operation theory

Client mode (Station)

Operation frequencies			Active/Passive	ad-hoc mode
2.4GHz band	11b/g/n	2412-2462MHz (2472MHz, for EU)	Active scan	No
W52	11a/an/ac	5180-5240MHz	Active scan	No
W53	11a/an/ac	5260-5320MHz	Passive scan	No
W56	11a/an/ac	5500-5700MHz ※IC:5600-5650MHz disable	Passive scan	No
W58	11a/an/ac	5745-5825MHz	Active scan	No

Compliance with FCC requirement 15.407(c)

Data transmission is always initiated by software, which is the passed down through the MAC, through the digital and analog baseband, and finally to the RF chip. Several special packets are initiated by the MAC. These are the only ways the digital baseband portion will turn on the RF transmitter, which it then turns off at the end of the packet. Therefore, the transmitter will be on only while one of the aforementioned packets is being transmitted. In other words, this device automatically discontinue transmission in case of either absence of information to transmit or operational failure.

3.6. Wireless LAN transmitter specifications

2.4GHz (+25℃)

Items	Specifications				Remarks
	Modes	Channels	Target Power	Units	
Transmit Power	11b	Ch.1-Ch.11	+18.0	dBm	
	11g	Ch.1-Ch.11	+16.5	dBm	
	11n 20MHz	Ch.1-Ch.11	+16.5	dBm	
	11n 40MHz	Ch.3-Ch.9	+13.5	dBm	

5GHz (+25℃)

Items	Specifications				Remarks
	Modes	Channels	Target Power	Units	
Transmit Power	11a	Ch.36-Ch.48	+10.0	dBm	
		Ch.52-Ch.64	+10.0	dBm	
		Ch.100-Ch.140	+10.0	dBm	
		Ch.149-Ch.165	+10.0	dBm	
	11n/ac 20MHz	Ch.36-Ch.48	+11.0	dBm	
		Ch.52-Ch.64	+11.0	dBm	
		Ch.100-Ch.140	+10.0	dBm	
		Ch.149-Ch.165	+11.0	dBm	
	11n/ac 40MHz	Ch.38-Ch.46	+10.0	dBm	
		Ch.54-Ch.62	+10.0	dBm	
		Ch.102-Ch.134	+10.0	dBm	
		Ch.151-Ch.159	+10.0	dBm	
	11ac 80MHz	Ch.42	+9.0	dBm	
		Ch.58	+9.0	dBm	
		Ch.106-Ch.122	+9.0	dBm	
		Ch.155	+9.5	dBm	

3.7. Wireless LAN Receiver specifications

2.4GHz (Operating temperature)

Items	Specifications				Remarks
	Modes		Max.	Units	
Receiver minimum sensitivity	11b (FER<8%)	1Mbps	-80	dBm	
		2Mbps	-80	dBm	
		5.5Mbps	-76	dBm	
		11Mbps	-76	dBm	
	11g (PER<10%)	6Mbps	-82	dBm	
		9Mbps	-81	dBm	
		12Mbps	-79	dBm	
		18Mbps	-77	dBm	
		24Mbps	-74	dBm	
		36Mbps	-70	dBm	
		48Mbps	-66	dBm	
		54Mbps	-65	dBm	
	11n/ac 20MHz (PER<10%)	MCS0	-82	dBm	HT/VHT
		MCS1	-79	dBm	HT/VHT
		MCS2	-77	dBm	HT/VHT
		MCS3	-74	dBm	HT/VHT
		MCS4	-70	dBm	HT/VHT
		MCS5	-66	dBm	HT/VHT
		MCS6	-65	dBm	HT/VHT
		MCS7	-64	dBm	HT/VHT
		MCS8	-59	dBm	VHT
	11n/ac 40MHz (PER<10%)	MCS0	-79	dBm	HT/VHT
		MCS1	-76	dBm	HT/VHT
		MCS2	-74	dBm	HT/VHT
		MCS3	-71	dBm	HT/VHT
		MCS4	-67	dBm	HT/VHT
		MCS5	-63	dBm	HT/VHT
		MCS6	-62	dBm	HT/VHT
		MCS7	-61	dBm	HT/VHT
		MCS8	-56	dBm	VHT
		MCS9	-54	dBm	VHT

5GHz (Operating temperature)

Items	Specifications				Remarks
	Modes		Max.	Units	
Receiver minimum sensitivity	11a (PER<10%)	6Mbps	-82	dBm	
		9Mbps	-81	dBm	
		12Mbps	-79	dBm	
		18Mbps	-77	dBm	
		24Mbps	-74	dBm	
		36Mbps	-70	dBm	
		48Mbps	-66	dBm	
		54Mbps	-65	dBm	
	11n/ac 20MHz (PER<10%)	MCS0	-82	dBm	HT/VHT
		MCS1	-79	dBm	HT/VHT
		MCS2	-77	dBm	HT/VHT
		MCS3	-74	dBm	HT/VHT
		MCS4	-70	dBm	HT/VHT
		MCS5	-66	dBm	HT/VHT
		MCS6	-65	dBm	HT/VHT
		MCS7	-64	dBm	HT/VHT
		MCS8	-59	dBm	VHT
	11n/ac 40MHz (PER<10%)	MCS0	-79	dBm	HT/VHT
		MCS1	-76	dBm	HT/VHT
		MCS2	-74	dBm	HT/VHT
		MCS3	-71	dBm	HT/VHT
		MCS4	-67	dBm	HT/VHT
		MCS5	-63	dBm	HT/VHT
		MCS6	-62	dBm	HT/VHT
		MCS7	-61	dBm	HT/VHT
		MCS8	-56	dBm	VHT
		MCS9	-54	dBm	VHT
	11ac 80MHz (PER<10%)	MCS0	-76	dBm	HT/VHT
		MCS1	-73	dBm	HT/VHT
		MCS2	-71	dBm	HT/VHT
		MCS3	-68	dBm	HT/VHT
		MCS4	-64	dBm	HT/VHT
		MCS5	-60	dBm	HT/VHT
		MCS6	-59	dBm	HT/VHT
		MCS7	-58	dBm	HT/VHT
		MCS8	-53	dBm	VHT
		MCS9	-51	dBm	VHT

3.8. General specifications

Items	Specifications			Units	Remarks
Chipset	QCA9377-3 (Qualcomm Atheros)			–	
Core specification				–	
Operating Frequency range	Mode	Min	Max		
				MHz	
Frequency step		1		MHz	
		2		MHz	
Modulation type				–	

3.9. Transmitter specifications

Items	Specifications						Units	Remarks
	Standards			Min.	Typ.	Max.		
Maximum TX power		Class 2		-3.7	+0.5	+4.0	dBm	
		Class 2		-6.7	-2.5	+1.0	dBm	
				-4.2	+1.5	+3.5	dBm	

3.10. Receiver specifications

(Operating temperature)

Items	Specifications					Units	Remarks
Receiver minimum	Standards	Packet Types	Min.	Typ.	Max.		
Sensitivity			–	-90	-70	dBm	
			–	-89	-70	dBm	
			–	-84	-70	dBm	
			–	-94	-70	dBm	

4. Signal pin specifications

4.1. Pin locations

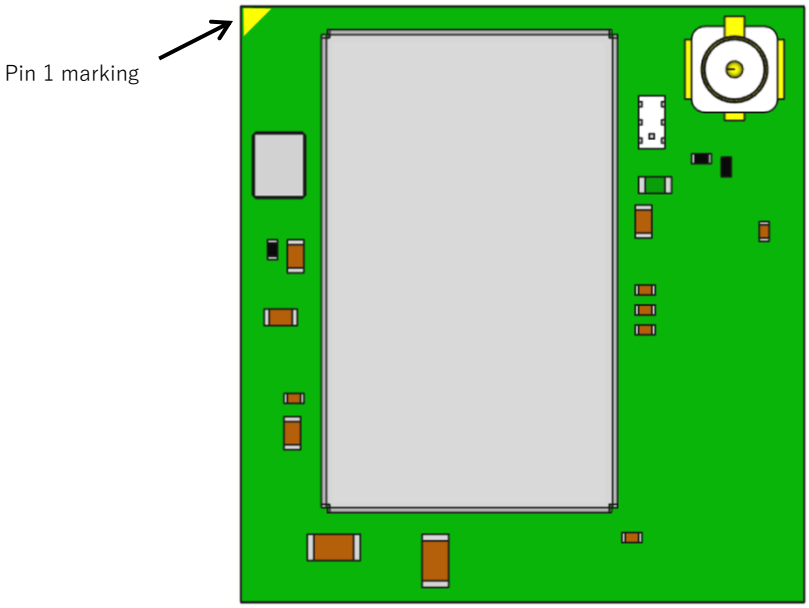

Top view

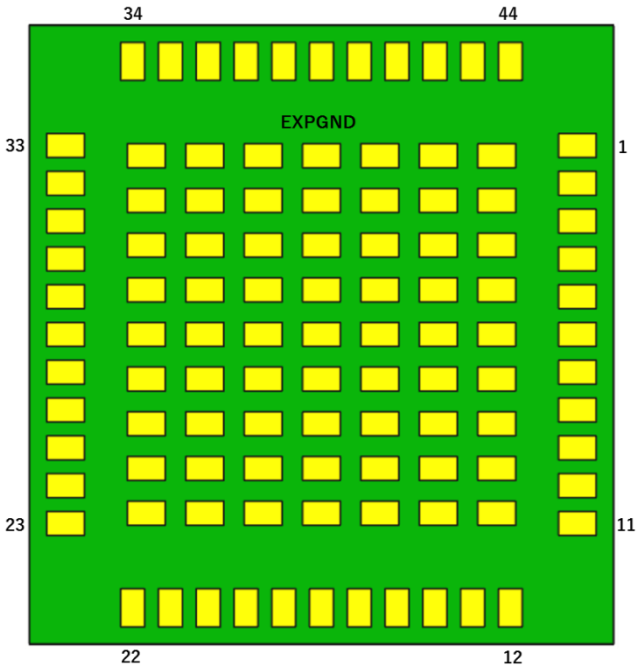

Bottom view

4.2. Signal specifications

Num	Signal name	Type	I/O Domain	Descriptions
1	GND	GND	GND	Ground
2	NC	NC	NC	NC pin
3	WLAN_PWD_L	PD	VDD_GPIO_1	WLAN reset. (0=Disable, 1=Enable) Internal Pull-down.
4	VDD	P	P	+3.135～+3.465V
5	VDD	P	P	+3.135～+3.465V
6	VDD	P	P	+3.135～+3.465V
7	VDD	P	P	+3.135～+3.465V
8	VDD_GPIO_1	P	P	+1.71 ～ +3.46V
9	VDD_GPIO_2	P	P	+1.71 ～ +3.46V
10	GND	GND	GND	Ground
11	GND	GND	GND	Ground
12	SD_D3	B	VDD_SDIO	SDIO Data[3] for WLAN. Since this pin is used for Bootstrap option, you must not drive this pin until releasing the reset signal. Internal Pull-up.
13	SD_D2	B	VDD_SDIO	SDIO Data[2] for WLAN. Since this pin is used for Bootstrap option, you must not drive this pin until releasing the reset signal. Interal Pull-up
14	SD_D1	B	VDD_SDIO	SDIO Data[1] for WLAN. Since this pin is used for Bootstrap option, you must not drive this pin until releasing the reset signal. Interal Pull-up
15	SD_D0	B	VDD_SDIO	SDIO Data[0] for WLAN.
16	SD_CMD	B	VDD_SDIO	SDIO command for WLAN.
17	GND	GND	GND	Ground
18	SD_CLK	DI	VDD_SDIO	SDIO Clock for WLAN.
19	GND	GND	GND	Ground
20	RESERVED	DO	VDD_SDIO	Un-used signal. Keep Open. Since this pin is used for Bootstrap option, you must not drive this pin until releasing the reset signal. Internal Pull-up.
21	VDD_SDIO	P	P	+1.71 ～ +3.46V
22	GND	GND	GND	Ground
23	GND	GND	GND	Ground
24	UART_RXD	DI	VDD_GPIO_1	Since this pin is used for Bootstrap option, you must not drive this pin until releasing the reset signal. Interal Pull-up.
25	UART_CTS	DI	VDD_GPIO_1	Since this pin is used for Bootstrap option, you must not drive this pin until releasing the reset signal. Interal Pull-up.

Num	Signal name	Type	I/O Domain	Descriptions
26	UART_TXD	DO	VDD_GPIO_1	Since this pin is used for Bootstrap option, you must not drive this pin until releasing the reset signal. Interal Pull-up.
27	UART_RTS	DO	VDD_GPIO_1	
28	NC	NC	NC	NC pin
29	RESERVED	DI	VDD	Un-used signal. Keep Open.
30	RESERVED	OD	Open drain	Un-used signal (Debug port).. Open drain output. Recommended to connect to a test pad and need external pull-up to IO power rail of the connected external system if the debug function is used. Keep Open if the debug function is not used.
31	GND	GND	GND	Ground
32	VDD	P	P	+3.135～+3.465V
33	GND	GND	GND	Ground
34	GND	GND	GND	Ground
35	WKUP_HOST	OD	Open drain	Active High. Need external pull-up to IO power rail of the host system. *No testing function. Need to verify with your host board. If you need this function please contact Mindray support.
36	WOW	OD	Open drain	Wake on wireless signal. Active High. Open drain output. Need external pull-up to IO power rail of the host system.
37	RESERVED	PD	VDD	Un-used signal. Keep Open. Internal Pull-down
38	I2S_SCK	PD	VDD_GPIO_1	Bootstrap option, you must not drive this pin until releasing the reset signal. Keep Open if Audio is not used. Internal Pull-down. *No testing function. Need to verify with your I2S device or CODEC. If you need this function please contact Mindray support.
39	I2S_WS	B	VDD_GPIO_1	Keep Open if Audio is not used. Internal pull-down. *No testing function. Need to verify with your I2S device or CODEC. If you need this function please contact Mindray support.
40	I2S_SDI	DI	VDD_GPIO_1	Keep Open if Audio is not used. *No testing function. Need to verify with your I2S device or CODEC. If you need this function please contact Mindray support.
41	I2S_SDO	DO	VDD_GPIO_1	Keep Open if Audio is not used. *No testing function. Need to verify with your I2S device or CODEC. If you need this function please contact Mindray support.
42	GND	GND	GND	Ground
43	PWD_L	PD	VDD_GPIO_1	(0=Disable, 1=Enable) Internal Pull-down.
44	GND	GND	GND	Ground

Num	Signal name	Type	I/O Domain	Descriptions
EXPGND	Exposed Ground	GND	GND	Exposed Ground 72 pads

5. Mechanical Specifications

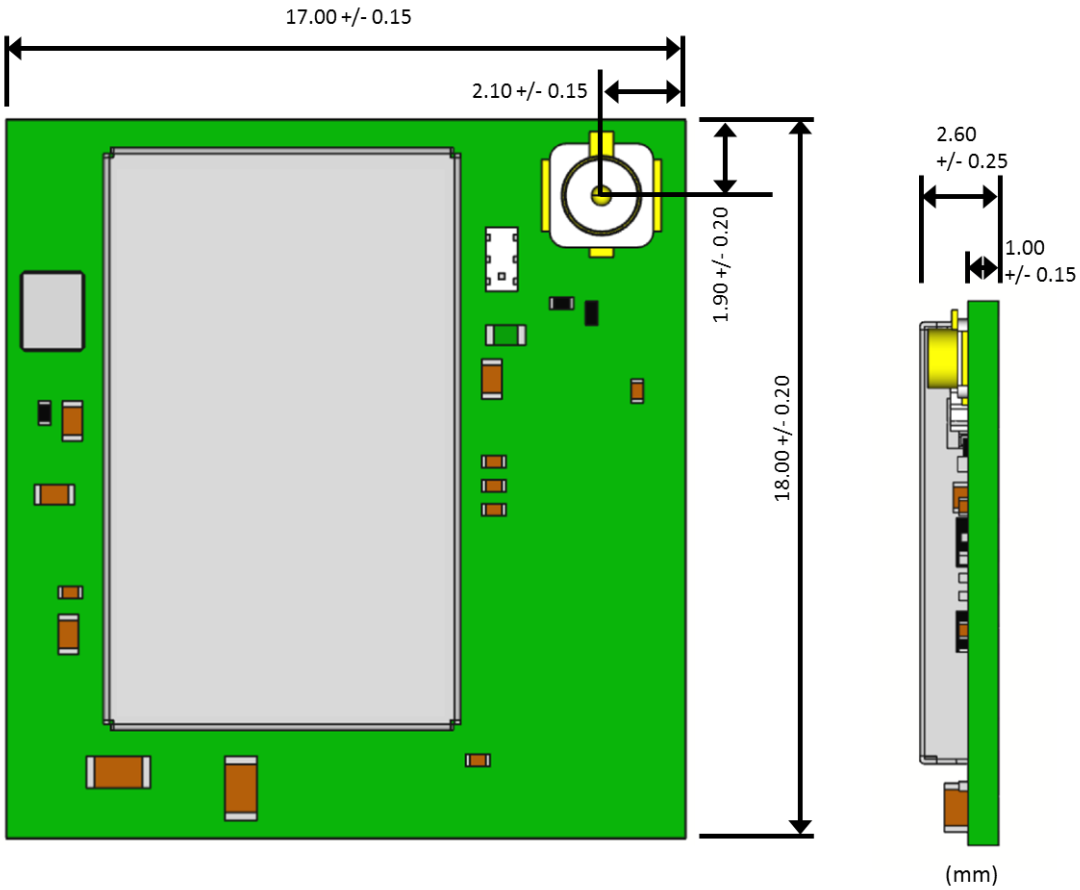

Top view

6. Indication specifications

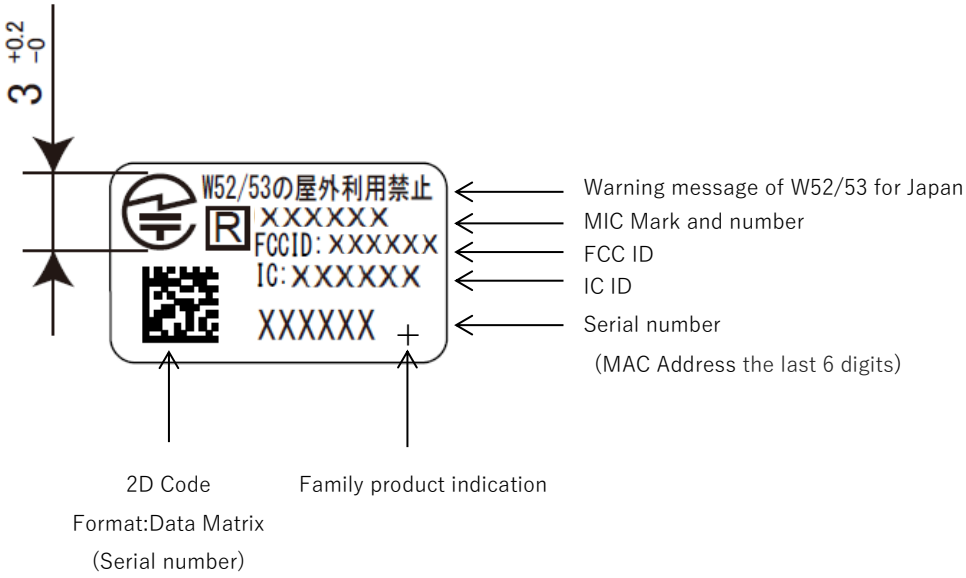

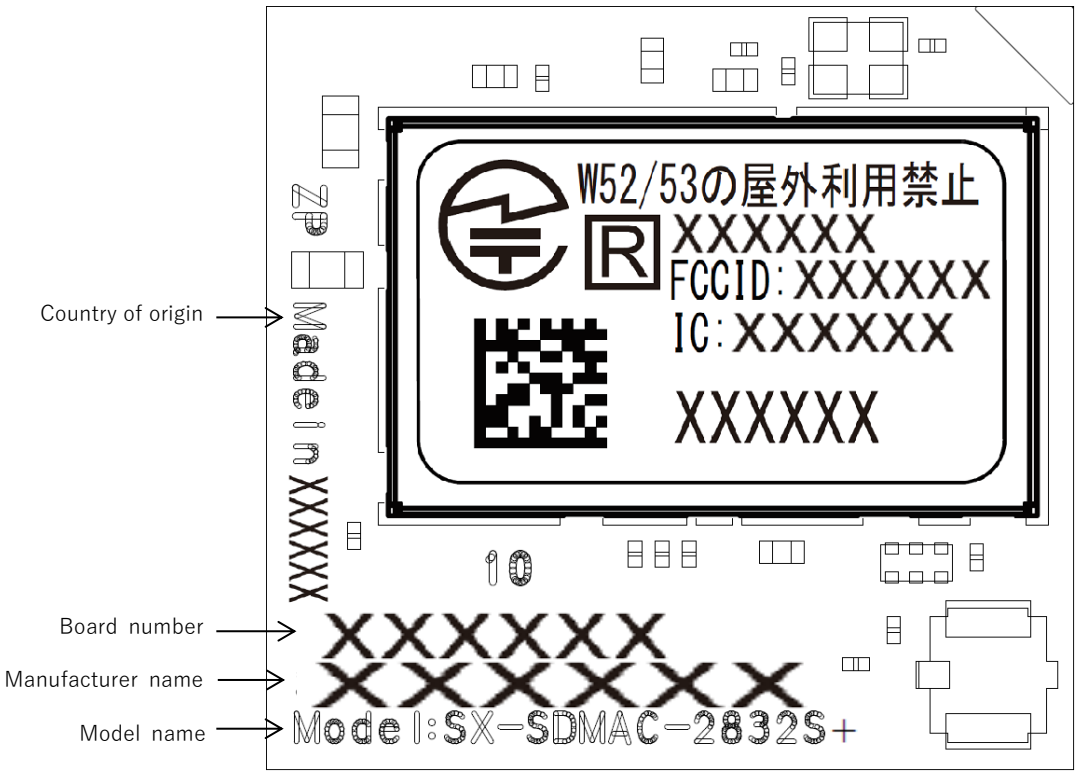

The Label is placed on the RF shielding cas.

7. System requirements and quick start guide

1) System requirements
Prepare the host CPU board whose spec requirements are shown below.

System pecifications

Items	Descriptions
MCU (CPU)	ARM based 1.0GHz or greater SoC from any companies. Eg. Freescale i.MX6SX – 1200MHz
Memory size	ROM : 512MB, RAM : 1GB or greater
OS	Linux any kernel distribution
Host interface	SDIO 3.0 / UART

2) Solder down SX-SDMAC-2832+ on the CPU board. See “system block diagram”.

3) Connect the Antenna to the SX-SDAMC-2832S+. See “Antenna location”.

4) Install the driver which is provided by Mindray to the CPU board.
Any other 3rd party’s software shall be rejected due to Subsystem ID mismatch.

5) Set wireless setting via serial console and connect to the AP.

System block diagram

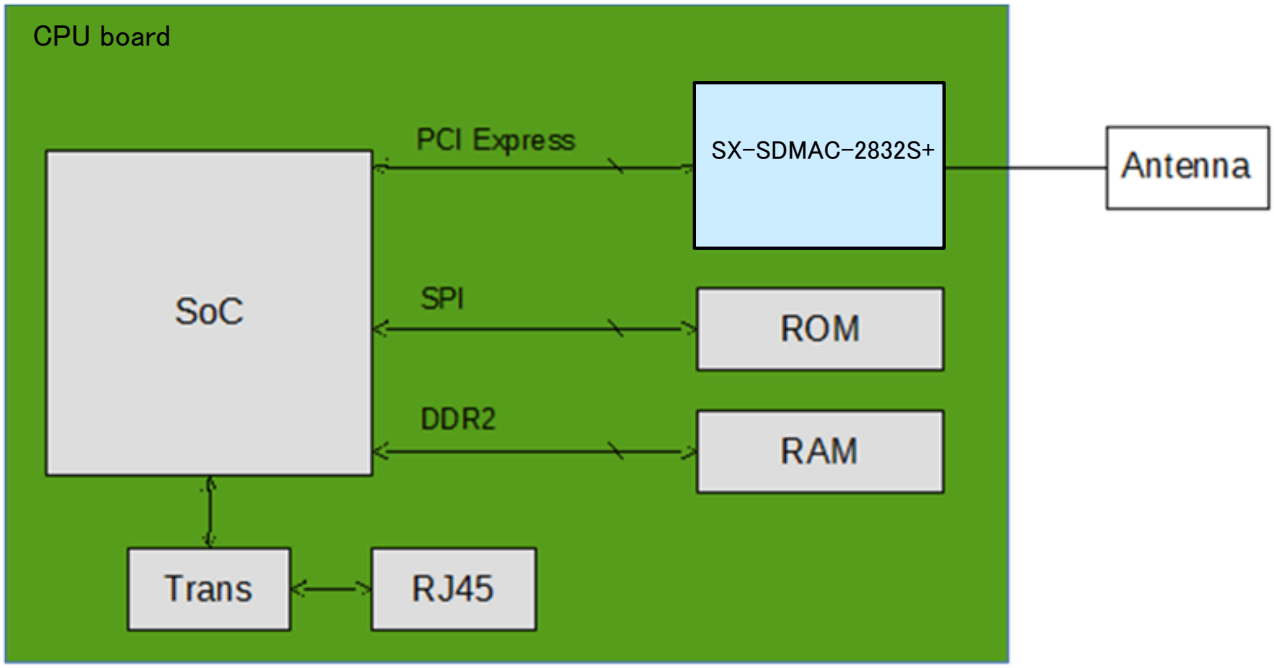

Antenna location

Attach the PCB antenna to MHF-1 connector on the SX-SDMAC module which is mounted on the 3rd vendor's CPU board. The PCB antenna must be placed on the dielectric material like the plastic case and must be 20 mm or more far from the CPU board.

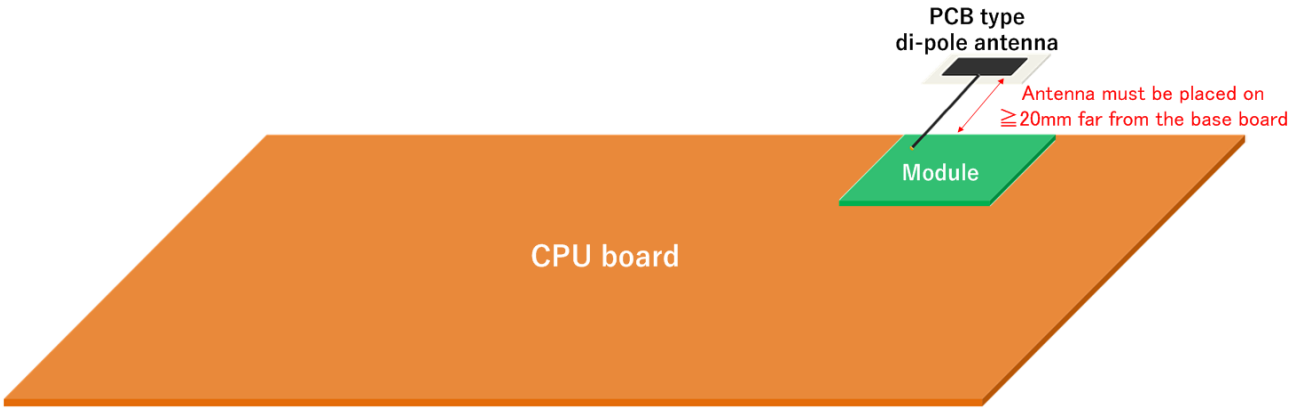

8. Notifications

FCCID : ZLZ-PMACS
IC : 9726A-PMACS

Regulatory notice

Channel Selection

For product available in the USA/Canada market, only channel 1~11 can be operated, in the EU market, only channel 1~13 can be operated. Selection of other channels is not possible.

Fcc Rules Part 15

FCC CAUTION

Changes or modifications not expressly approved by the party responsible for compliance could void the user's authority to operate the equipment.

FCC Rules, Part 15 § 15.19(a)(3) / IC RSS Gen § 8.4

Below sentences must be indicated on the final product which contains this module inside.

This device complies with part 15 of FCC Rules and Industry Canada's licence-exempt RSSs. Operation is subject to the following two conditions: (1) this device may not cause harmful interference, and (2) this device must accept any interference received, including interference that may cause undesired operation.

Le présent appareil est conforme aux CNR d'Industrie Canada applicables aux appareils radio exempts de licence. L'exploitation est autorisée aux deux conditions suivantes : 1) l'appareil ne doit pas produire de brouillage; 2) l'utilisateur de l'appareil doit accepter tout brouillage radioélectrique subi, même si le brouillage est susceptible d'en compromettre le fonctionnement.

FCC Rules Part 15 Subpart C § 15.247 and Subpart E / IC RSS-102 § 2.6

This equipment complies with FCC/IC radiation exposure limits set forth for an uncontrolled environment and meets the FCC radio frequency (RF) Exposure Guidelines and RSS-102 of the IC radio frequency (RF) Exposure rules. This equipment should be installed and operated keeping the radiator at least 20cm or more away from person's body.

Cet équipement est conforme aux limites d'exposition aux rayonnements énoncées pour un environnement non contrôlé et respecte les règles les radioélectriques (RF) de la FCC lignes directrices d'exposition et d'exposition aux fréquences radioélectriques (RF) CNR-102 de l'IC. Cet équipement doit être installé et utilisé en gardant une distance de 20 cm ou plus entre le radiateur et le corps humain.

FCC Rules Part 15 Subpart E §15.407(c)

Compliance with FCC requirement 15.407(c)

Data transmission is always initiated by software, which is the passed down through the MAC, through the digital and analog baseband, and finally to the RF chip. Several special packets are initiated by the MAC. These are the only ways the digital baseband portion will turn on the RF transmitter, which it then turns off at the end of the packet. Therefore, the transmitter will be on only while one of the aforementioned packets is being transmitted. In other words, this device automatically discontinue transmission in case of either absence of information to transmit or operational failure.

FCC Rules Part 15 Subpart E §15.407(g)

Frequency Tolerance: +/-20 ppm

FCC Rules Part 15 Subpart C §15.247(g) / Subpart E

This device and its antenna(s) must not be co-located or operation in conjunction with any other antenna or transmitter.

RSS-Gen §8.3

This radio transmitter 4908A-PMACS has been approved by Industry Canada to operate with the antenna types listed below with the maximum permissible gain and required antenna impedance for each antenna type indicated. Antenna types not included in this list, having a gain greater than the maximum gain indicated for that type, are strictly prohibited for use with this device.

Le numéro IC du présent émetteur radio 4908A-PMACS a été approuvé par Industrie Canada pour fonctionner avec les types d'antenne énumérés ci-dessous et ayant un gain admissible maximal et l'impédance requise pour chaque type d'antenne. Les types d'antenne non inclus dans cette liste, ou dont le gain est supérieur au gain maximal indiqué pour ce type, sont strictement interdits pour l'exploitation avec cet appareil.

Certified antenna list

Antenna Type	Supplier	Antenna Part No.	Freq.	Peak Antenna Gain(dBi)
Dipole	AMPHENOL	MG7018-41-000-R	2.4G 5G	1.87dBi Peak @2.4G 0.94dBi Peak @5G
PCB Dipole	Laird	MAF95310	2.4G 5G	2.79dBi Peak @2.4G 3.38dBi Peak @5G
Dipole	AMPHENOL	MG7324-41-000-R	2.4G 5G	1.32dBi Peak @2.4G 2.75dBi Peak @5G
PCB Dipole	Laird	EMF2449A2-8UFL	2.4G 5G	2.79dBi Peak @2.4G 3.38dBi Peak @5G
PCB Dipole	Yichuang	AZM24510-1A	2.4G 5G	1dBi Peak @2.4G 1dBi Peak @5G

RSS-247 Issue 2 February 2017

Radio Standards Specification RSS-247, Issue 2, Digital Transmission Systems (DTSs), Frequency Hopping Systems (FHSs) and Licence-Exempt Local Area Network (LE-LAN) Devices, is a new standard to replace annexes 8 and 9 of RSS-210, Issue 8, Licence-exempt Radio Apparatus (All Frequency Bands): Category I Equipment.

At the date of publication of this standard, devices covered under the scope of this document will no longer be certified under RSS-210, Issue 8.

Le Cahier des normes radioélectriques 247, 2re édition, Les systèmes de transmission numérique (STN), les systèmes à sauts de fréquence (SSF) et les dispositifs de réseaux locaux exempts de licence (RL-EL), remplace les annexes 8 et 9 du CNR-210, 8e édition, Appareils radio exempts de licence (pour toutes les bandes de fréquences) : matériel de catégorie I.

À la date de publication de la présente norme, les dispositifs visés par ce document ne seront plus certifiés conformément au CNR-210, 8e édition.

Frequency Band 5150 – 5250 MHz

LE-LAN devices are restricted to indoor operation only in the band 5150-5250 MHz.

Les dispositifs LAN-EL sont restreints à une utilisation à l'intérieur, dans la bande 5150-5250MHz.

High-power radars are allocated as primary users (i.e. priority users) of the bands 5250-5350 MHz and 5650-5850 MHz and that these radars could cause interference and/or damage to LE-LAN devices.

Les radars de haute puissance sont désignés comme utilisateurs principaux (c'est-à dire utilisateurs prioritaires) pour les bandes 5250-5350 MHz et 5650-5850 MHz, et que ces radars peuvent provoquer du brouillage et/ou des dommages aux dispositifs LAN-EL.

WARNING :

The FCC / The Industry Canadaregulations provide that changes or modifications not expressly approved by the party responsible for compliance could void the user'sauthority to operate the equipment.

Manual and Product Labeling information To The End User

The end user manual shall include all required regulatory information/warning as show in this manual.And when this module is installed in the host product, you must include a "Contain FCC ID : ZLZ-PMACS"and a "Contain IC: 9726A-PMACS" in the label of the host product.

This module is designed for embedded purpose into the general electric devices, and is not designed for high reliability demands like aircraft instruments, nuclear control instruments, high reliability medical instruments, high reliability security instruments or any other devices required extremely high reliability and quality.

- As this module communicates by radio wave, it is strongly recommended to use some security system to prevent unexpected information leakage to others.

- This module is a radio module for embedded purpose. Please understand functions and features of this module, and evaluate as the final product which has this module embedded. Also, as evaluation of EMC conformity of this module has not been performed, EMC conformity evaluation and application must be performed with the final product which this module is embedded.

- This module will effect to some other device or be affected by the some other device using the same frequency band.Please investigate the environment to use this module beforehand.

- Disassembling or modifying the radio module leads to punishment based on radio law.

- This module is the embedded module that has the exposed connectors or some devices.Please be careful for electro static, condensing, and other dusts.

- "The OEM integrator has to be aware not to provide information to the end user regarding how to install or remove this RF module in the user's manual of the end product which integrates this module."

IMPORTANT NOTE: In the event that these conditions cannot be met (for example co-location with another transmitter), then the FCC / IC authorization is no longer considered valid and the FCC / IC ID cannot be used on the final product. In these circumstances, the OEM integrator will be responsible for reevaluating the end product (including the transmitter) and obtaining a separate FCC / IC authorization. As long as a condition above is met, further transmitter test will not be required. However, the OEM integrator is still responsible for testing their end product for any additional compliance requirements required with this module installed (for example, digital device emissions, PC peripheral requirements, etc.