Test Laboratory: Huatongwei International Inspection Co., Ltd.,SAR Lab Date: 7/8/2024

WIFI 2.4G Body&Limbs

Communication System: UID 0, Generic WIFI (0); Frequency: 2437 MHz;Duty Cycle: 1:1
Medium parameters used (interpolated): f = 2437 MHz; σ = 1.745 S/m; ε_r = 39.248; ρ = 1000 kg/m^3
Phantom section: Flat Section
Ambient Temperature:22.5°C;Liquid Temperature:22.0°C

DASY Configuration:

- Probe: EX3DV4 - SN7494; ConvF(8.13, 8.13, 8.13) @ 2437 MHz; Calibrated: 6/7/2024
- Sensor-Surface: 1.4mm (Mechanical Surface Detection)
- Electronics: DAE4 Sn1549; Calibrated: 4/16/2024
- Phantom: ELI V8.0 ; Type: QD OVA 004 AA ; Serial: 2078
- DASY52 52.10.2(1495); SEMCAD X 14.6.12(7450)

Top 0mm/CH6/Area Scan (51x81x1): Interpolated grid: dx=1.200 mm, dy=1.200 mm

Info: Interpolated medium parameters used for SAR evaluation.
Maximum value of SAR (interpolated) = 0.0669 W/kg

Top 0mm/CH6/Zoom Scan (7x7x7)/Cube 0: Measurement grid: dx=5mm, dy=5mm, dz=5mm
Reference Value = 5.298 V/m; Power Drift = -0.14 dB
Peak SAR (extrapolated) = 0.0950 W/kg
SAR(1 g) = 0.041 W/kg; SAR(10 g) = 0.020 W/kg

Info: Interpolated medium parameters used for SAR evaluation.
Maximum value of SAR (measured) = 0.0690 W/kg

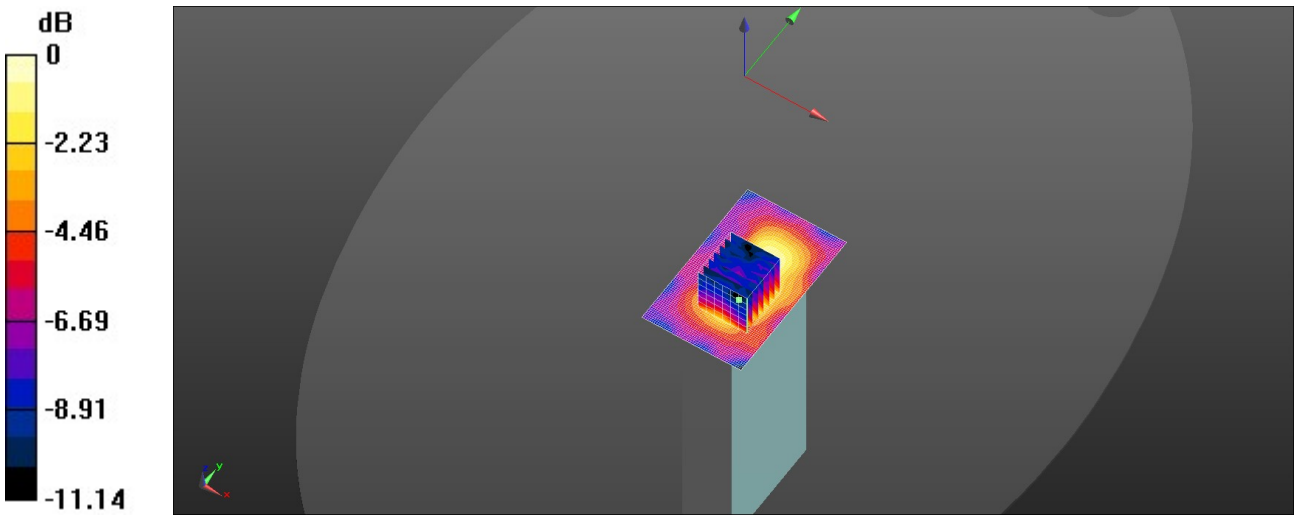

0 dB = 0.0669 W/kg = -11.75 dBW/kg

Test Laboratory: Huatongwei International Inspection Co., Ltd.,SAR Lab Date: 7/8/2024

WIFI 5G Band 1 Body&Limbs

Communication System: UID 0, Generic WIFI (0); Frequency: 5180 MHz;Duty Cycle: 1:1
Medium parameters used: f = 5180 MHz; σ = 4.679 S/m; ε_r = 34.961; ρ = 1000 kg/m^3
Phantom section: Flat Section
Ambient Temperature:22.5°C;Liquid Temperature:22.0°C

DASY Configuration:

- Probe: EX3DV4 - SN7494; ConvF(5.7, 5.7, 5.7) @ 5180 MHz; Calibrated: 6/7/2024
- Sensor-Surface: 1.4mm (Mechanical Surface Detection)
- Electronics: DAE4 Sn1549; Calibrated: 4/16/2024
- Phantom: ELI V8.0 ; Type: QD OVA 004 AA ; Serial: 2078
- DASY52 52.10.2(1495); SEMCAD X 14.6.12(7450)

Top 0mm/CH36/Area Scan (61x101x1): Interpolated grid: dx=1.000 mm, dy=1.000 mm
Maximum value of SAR (interpolated) = 0.300 W/kg

Top 0mm/CH36/Zoom Scan (8x8x7)/Cube 0: Measurement grid: dx=4mm, dy=4mm, dz=1.4mm
Reference Value = 3.658 V/m; Power Drift = -0.19 dB
Peak SAR (extrapolated) = 0.493 W/kg
SAR(1 g) = 0.117 W/kg; SAR(10 g) = 0.043 W/kg
Maximum value of SAR (measured) = 0.286 W/kg

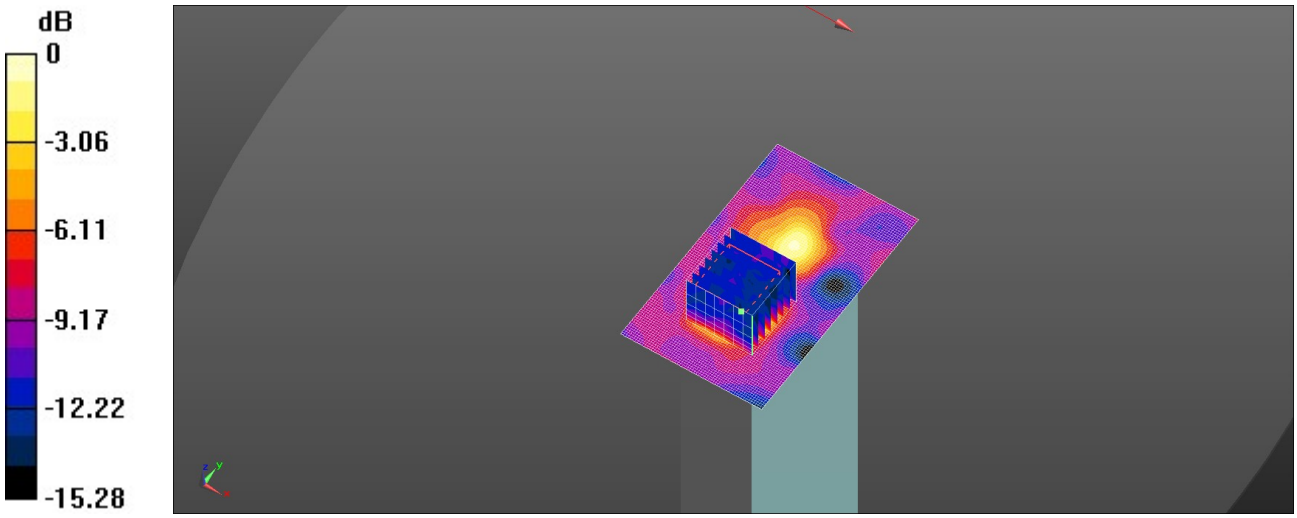

0 dB = 0.300 W/kg = -5.24 dBW/kg

Test Laboratory: Huatongwei International Inspection Co., Ltd.,SAR Lab Date: 7/8/2024

WIFI 5G Band 3 Body&Limbs

Communication System: UID 0, Generic WIFI (0); Frequency: 5825 MHz;Duty Cycle: 1:1
Medium parameters used (interpolated): f = 5825 MHz; σ = 5.419 S/m; ε_r = 33.954; ρ = 1000 kg/m^3
Phantom section: Flat Section
Ambient Temperature:22.5°C;Liquid Temperature:22.0°C

DASY Configuration:

- Probe: EX3DV4 - SN7494; ConvF(5.19, 5.19, 5.19) @ 5825 MHz; Calibrated: 6/7/2024
- Sensor-Surface: 1.4mm (Mechanical Surface Detection)
- Electronics: DAE4 Sn1549; Calibrated: 4/16/2024
- Phantom: ELI V8.0 ; Type: QD OVA 004 AA ; Serial: 2078
- DASY52 52.10.2(1495); SEMCAD X 14.6.12(7450)

Top 0mm/CH165/Area Scan (61x101x1): Interpolated grid: dx=1.000 mm, dy=1.000 mm

Info: Interpolated medium parameters used for SAR evaluation.
Maximum value of SAR (interpolated) = 0.429 W/kg

Top 0mm/CH165/Zoom Scan (8x8x7)/Cube 0: Measurement grid: dx=4mm, dy=4mm, dz=1.4mm
Reference Value = 5.448 V/m; Power Drift = -0.09 dB
Peak SAR (extrapolated) = 0.957 W/kg
SAR(1 g) = 0.158 W/kg; SAR(10 g) = 0.055 W/kg

Info: Interpolated medium parameters used for SAR evaluation.
Maximum value of SAR (measured) = 0.379 W/kg

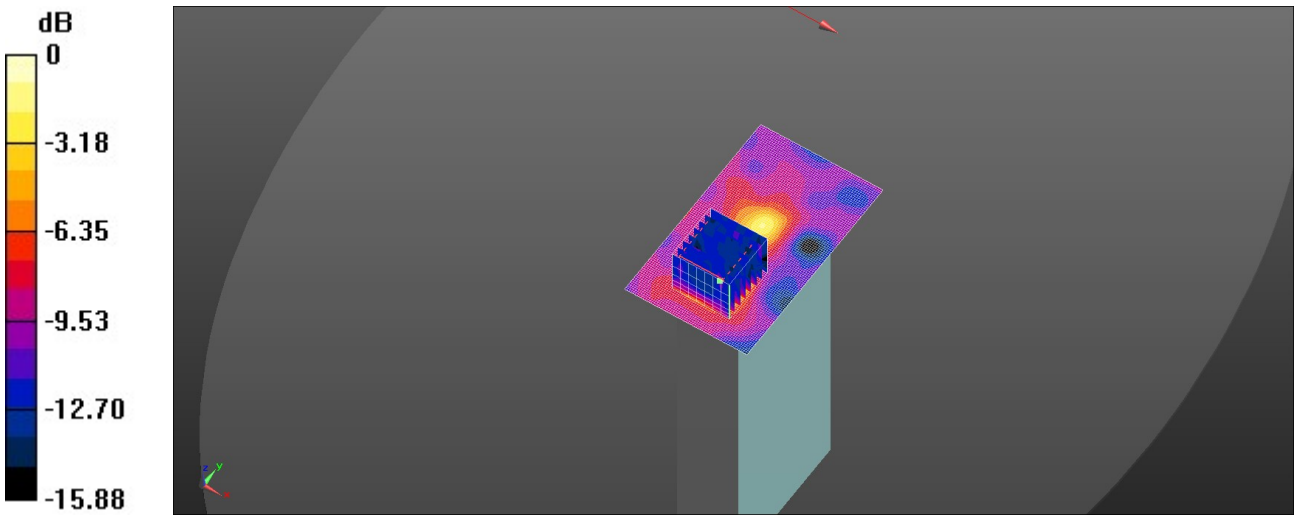

0 dB = 0.429 W/kg = -3.68 dBW/kg

Test Laboratory: Huatongwei International Inspection Co., Ltd.,SAR Lab Date: 7/8/2024

WIFI 2.4G Limbs

Communication System: UID 0, Generic WIFI (0); Frequency: 2437 MHz;Duty Cycle: 1:1
Medium parameters used (interpolated): f = 2437 MHz; σ = 1.745 S/m; ε_r = 39.248; ρ = 1000 kg/m^3
Phantom section: Flat Section
Ambient Temperature:22.5°C;Liquid Temperature:22.0°C

DASY Configuration:

- Probe: EX3DV4 - SN7494; ConvF(8.13, 8.13, 8.13) @ 2437 MHz; Calibrated: 6/7/2024
- Sensor-Surface: 1.4mm (Mechanical Surface Detection)
- Electronics: DAE4 Sn1549; Calibrated: 4/16/2024
- Phantom: ELI V8.0 ; Type: QD OVA 004 AA ; Serial: 2078
- DASY52 52.10.2(1495); SEMCAD X 14.6.12(7450)

Bottom 0mm/CH6/Area Scan (51x81x1): Interpolated grid: dx=1.200 mm, dy=1.200 mm

Info: Interpolated medium parameters used for SAR evaluation.
Maximum value of SAR (interpolated) = 0.828 W/kg

Bottom 0mm/CH6/Zoom Scan (7x7x7)/Cube 0: Measurement grid: dx=5mm, dy=5mm, dz=5mm
Reference Value = 26.54 V/m; Power Drift = -0.13 dB
Peak SAR (extrapolated) = 0.957 W/kg
SAR(1 g) = 0.674 W/kg; SAR(10 g) = 0.237 W/kg

Info: Interpolated medium parameters used for SAR evaluation.
Maximum value of SAR (measured) = 0.825 W/kg

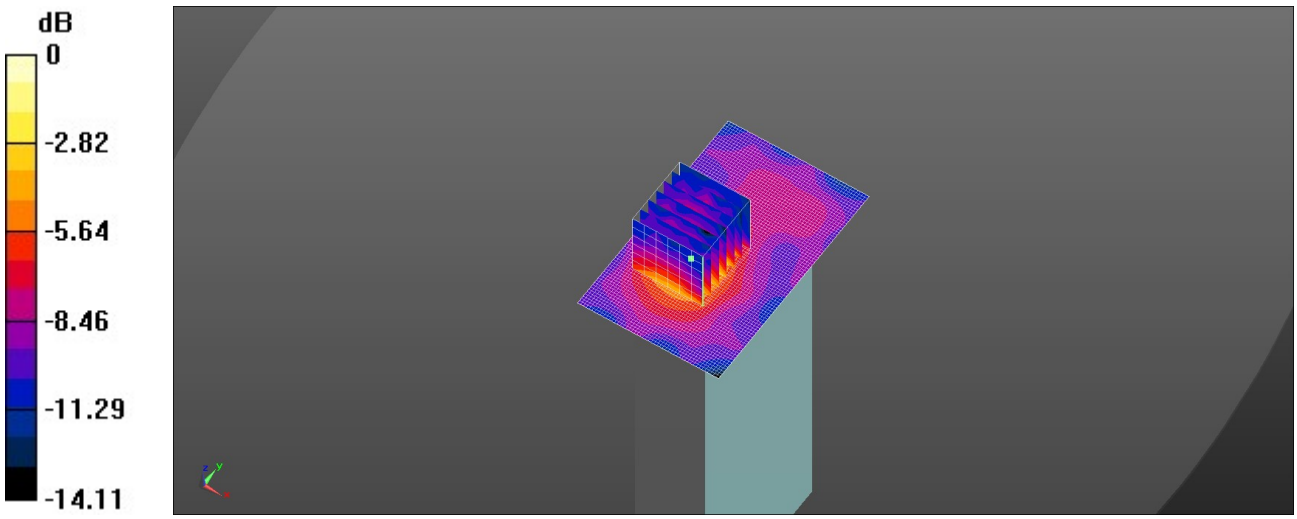

0 dB = 0.828 W/kg = -8.94 dBW/kg

Test Laboratory: Huatongwei International Inspection Co., Ltd.,SAR Lab Date: 7/8/2024

WIFI 5G Band 1 Limbs

Communication System: UID 0, Generic WIFI (0); Frequency: 5180 MHz;Duty Cycle: 1:1
Medium parameters used: f = 5180 MHz; σ = 4.679 S/m; ε_r = 34.961; ρ = 1000 kg/m^3
Phantom section: Flat Section
Ambient Temperature:22.5°C;Liquid Temperature:22.0°C

DASY Configuration:

- Probe: EX3DV4 - SN7494; ConvF(5.7, 5.7, 5.7) @ 5180 MHz; Calibrated: 6/7/2024
- Sensor-Surface: 1.4mm (Mechanical Surface Detection)
- Electronics: DAE4 Sn1549; Calibrated: 4/16/2024
- Phantom: ELI V8.0 ; Type: QD OVA 004 AA ; Serial: 2078
- DASY52 52.10.2(1495); SEMCAD X 14.6.12(7450)

Bottom 0mm/CH36/Area Scan (61x101x1): Interpolated grid: dx=1.000 mm, dy=1.000 mm
Maximum value of SAR (interpolated) = 6.10 W/kg

Bottom 0mm/CH36/Zoom Scan (8x8x7)/Cube 0: Measurement grid: dx=4mm, dy=4mm, dz=1.4mm
Reference Value = 38.50 V/m; Power Drift = 0.15 dB
Peak SAR (extrapolated) = 9.92 W/kg
SAR(1 g) = 2.63 W/kg; SAR(10 g) = 0.677 W/kg
Maximum value of SAR (measured) = 6.78 W/kg

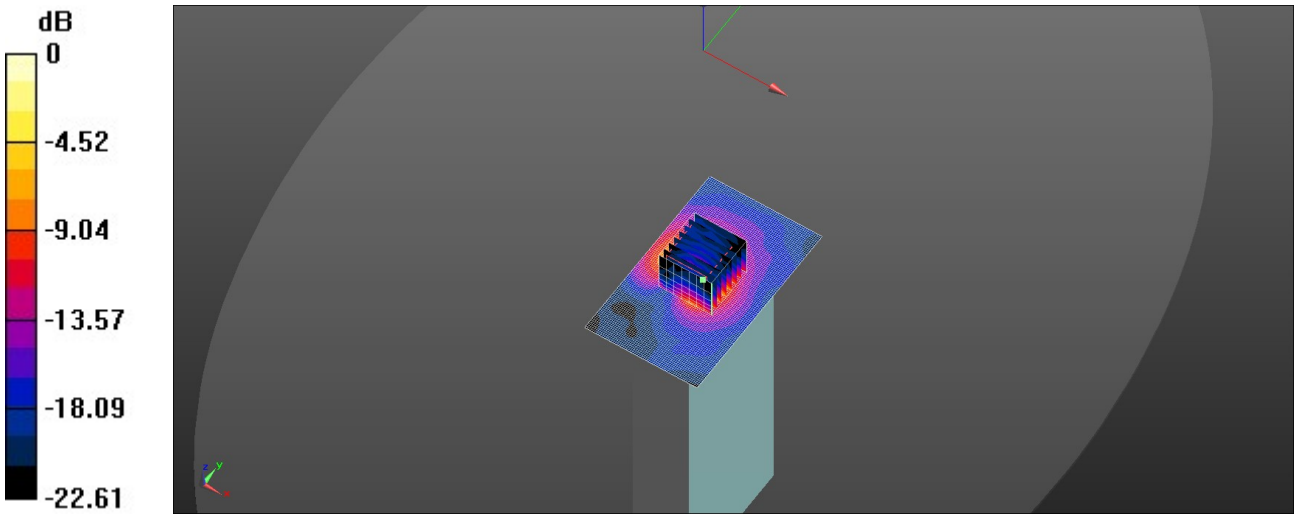

0 dB = 6.10 W/kg = 7.85 dBW/kg

Test Laboratory: Huatongwei International Inspection Co., Ltd.,SAR Lab Date: 7/8/2024

WIFI 5G Band 3 Limbs

Communication System: UID 0, Generic WIFI (0); Frequency: 5825 MHz;Duty Cycle: 1:1
Medium parameters used (interpolated): f = 5825 MHz; σ = 5.419 S/m; ε_r = 33.954; ρ = 1000 kg/m^3
Phantom section: Flat Section
Ambient Temperature:22.5°C;Liquid Temperature:22.0°C

DASY Configuration:

- Probe: EX3DV4 - SN7494; ConvF(5.19, 5.19, 5.19) @ 5825 MHz; Calibrated: 6/7/2024
- Sensor-Surface: 1.4mm (Mechanical Surface Detection)
- Electronics: DAE4 Sn1549; Calibrated: 4/16/2024
- Phantom: ELI V8.0 ; Type: QD OVA 004 AA ; Serial: 2078
- DASY52 52.10.2(1495); SEMCAD X 14.6.12(7450)

Bottom 0mm/CH165/Area Scan (61x101x1): Interpolated grid: dx=1.000 mm, dy=1.000 mm

Info: Interpolated medium parameters used for SAR evaluation.
Maximum value of SAR (interpolated) = 8.10 W/kg

Bottom 0mm/CH165/Zoom Scan (8x8x7)/Cube 0: Measurement grid: dx=4mm, dy=4mm, dz=1.4mm
Reference Value = 41.42 V/m; Power Drift = 0.14 dB
Peak SAR (extrapolated) = 13.4 W/kg
SAR(1 g) = 3.55 W/kg; SAR(10 g) = 0.916 W/kg

Info: Interpolated medium parameters used for SAR evaluation.
Maximum value of SAR (measured) = 9.15 W/kg

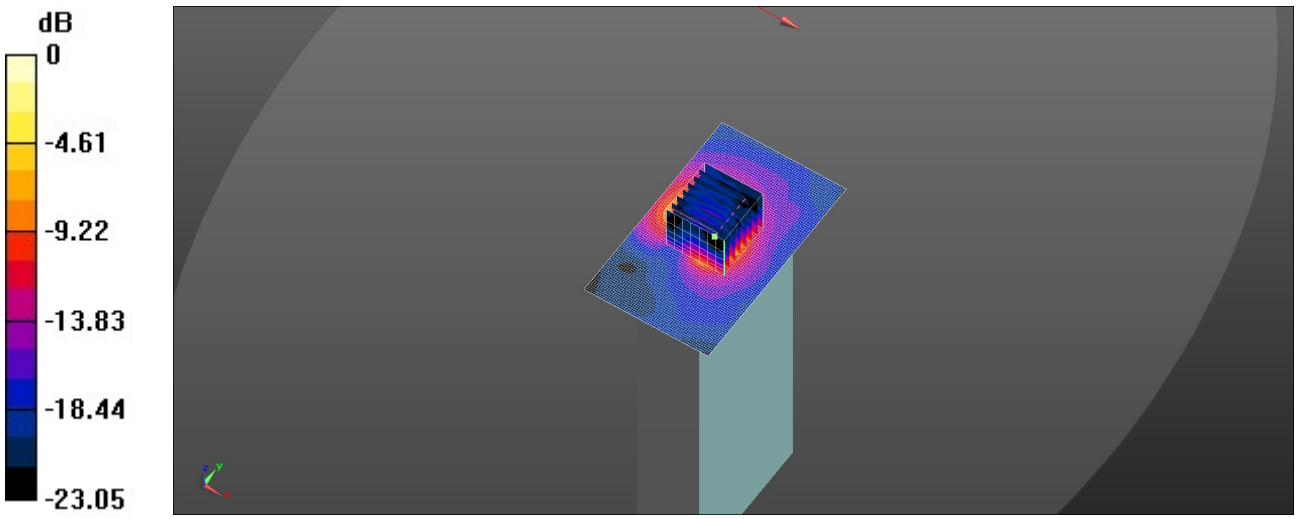

0 dB = 8.10 W/kg = 9.08 dBW/kg