# MEASUREMENT REPORT

## FCC PART 15 Subpart E WLAN 802.11ax

Report No.: S2023090421420105
Issue Date: 09-14-2024

| | |
|---|---|
| **Applicant:** | Shenzhen Mindray Bio-Medical Electronics Co., Ltd. |
| **Address:** | Mindray Building, Keji 12th Road South, High-Tech Industrial Park, Nanshan, 518057 Shenzhen,PEOPLE's REPUBLIC OF CHINA |
| **FCC ID:** | ZLZ-WXT5CM2803 |
| **Product:** | WiFi module |
| **Model No.:** | WXT5CM2803 |
| **FCC Classification:** | Unlicensed National Information Infrastructure (UNII) |
| **FCC Rule Part(s):** | Part 15 Subpart E (Section 15.407) |
| **Test Procedure(s):** | ANSI C63.10-2013, KDB 789033 D02v02r01, KDB 662911 D01v02r01, KDB 987594 D02v02r01 |
| **Item Receipt date:** | Sep 04, 2023 |
| **Test Date:** | Sep 11 2023 ~ Sep 10, 2024 |

Compiled By: Stone Zhang
(Stone Zhang)
Senior Test Engineer

Approved By: Line Chen
(Line Chen)
Engineer Manager

The test results relate only to the samples tested.
This equipment has been shown to be capable of compliance with the applicable technical standards as indicated in the measurement report and was tested in accordance with the measurement procedures specified in KDB 789033 D02v02r01. Test results reported herein relate only to the item(s) tested.
The test report shall not be reproduced except in full without the written approval of Fangguang Inspection & Testing Co., Ltd. Wuxi Branch
The test report must not be used by the client to claim product certifications, approval, or endorsement by NVLAP, NIST or any agency of U.S. Government.

# Revision History

| Report No. | Version | Description | Issue Date |
|---|---|---|---|
| S2023090421420105 | Rev. 01 | / | 09-14-2024 |
| | | | |

# CONTENTS

Description Page

**§2.1033 General Information** ..... **6**

**1. INTRODUCTION** ..... **7**

1.1. Scope ..... 7
1.2. Fangguang Test Location ..... 7

**2. PRODUCT INFORMATION** ..... **8**

2.1. Equipment Description ..... 8
2.2. Product Specification Subjective to this Report ..... 8
2.3. Operation Frequencies and Channel List ..... 8
2.4. Description of Available Antennas ..... 11
2.5. Device Capabilities ..... 13
2.6. Test Software ..... 16
2.7. Test Mode ..... 16
2.8. Test Configuration ..... 17
2.9. EMI Suppression Device(s)/Modifications ..... 17
2.10. Labeling Requirements ..... 17

**3. DESCRIPTION OF TEST** ..... **18**

3.1. Evaluation Procedure ..... 18
3.2. AC Line Conducted Emissions ..... 18
3.3. Radiated Emissions ..... 19

**4. ANTENNA REQUIREMENTS** ..... **20**

**5. TEST EQUIPMENT CALIBRATION DATE** ..... **21**

**6. MEASUREMENT UNCERTAINTY** ..... **22**

**7. TEST RESULT** ..... **23**

7.1. Summary ..... 23
7.2. 26dB Bandwidth Measurement and 99% Bandwidth ..... 24
7.2.1. Test Limit ..... 24
7.2.2. Test Procedure used ..... 24
7.2.3. Test Setting ..... 24
7.2.4. Test Setup ..... 24
7.2.5. Test Result ..... 25
7.3. 99% Occupied Bandwidth Measurement ..... 28
7.3.1. Test Limit ..... 28

7.3.2. Test Procedure used ....28
7.3.3. Test Setting .... 28
7.3.4. Test Setup .... 28
7.3.5. Test Result ....29
7.4. Output Power Measurement ....32
7.4.1. Test Limit .... 32
7.4.2. Test Procedure Used ....32
7.4.3. Test Setting .... 32
7.4.4. Test Setup .... 32
7.4.5. Test Result ....33
7.5. Power Spectral Density Measurement .... 37
7.5.1. Test Limit .... 37
7.5.2. Test Procedure Used ....37
7.5.3. Test Setting .... 37
7.5.4. Test Setup .... 38
7.5.5. Test Result ....38
7.6. In-Band Emissions (Mask) ....42
7.6.1. Test Limit .... 42
7.6.2. Test Procedure Used ....42
7.6.3. Test Setting .... 42
7.6.4. Test Setup .... 43
7.6.5. Test Result ....43
7.7. Contention Based Protocol ....48
7.7.1. Test Limit .... 48
7.7.2. Test Procedure Used ....49
7.7.3. Test Setting .... 49
7.7.4. Test Setup .... 50
7.7.5. Test Result ....51
7.8. Frequency Stability Measurement ....55
7.8.1. Test Limit .... 55
7.8.2. Test Procedure Used ....55
7.8.3. Test Setup .... 55
7.8.4. Test Result ....56
7.9. Radiated Spurious Emission Measurement and Radiated Restricted Band Edge Measurement ....62
7.9.1. Test Limit .... 62
7.9.2. Test Procedure Used ....62
7.9.3. Test Setting .... 62

7.9.4. Test Setup ..... 63
7.9.5. Test Result ..... 65
7.10. AC Conducted Emissions Measurement ..... 71
7.10.1. Test Limit ..... 71
7.10.2. Test Procedure ..... 71
7.10.3. Test Setup ..... 72
7.10.4. Test Result ..... 72
**8. CONCLUSION ..... 73**

## §2.1033 General Information

| | |
|---|---|
| **Applicant:** | Shenzhen Mindray Bio-Medical Electronics Co., Ltd. |
| **Applicant Address:** | Mindray Building, Keji 12th Road South, High-Tech Industrial Park, Nanshan, 518057 Shenzhen, PEOPLE's REPUBLIC OF CHINA |
| **Manufacturer:** | Shenzhen Mindray Bio-Medical Electronics Co., Ltd. |
| **Manufacturer Address:** | Mindray Building, Keji 12th Road South, High-Tech Industrial Park, Nanshan, 518057 Shenzhen, PEOPLE's REPUBLIC OF CHINA |
| **Test Site:** | Fangguang Inspection & Testing Co., Ltd. |
| **LAB ID:** | CN5037 |
| **Test Site Address:** | G9 Building, China Sensor Network International Innovation Park No.200, Linghu Avenue Wuxi, Jiangsu 214000 China |
| **FCC Rule Part(s):** | Part 15 Subpart E (15.407) |
| **FCC ID:** | ZLZ-WXT5CM2803 |
| **Test Device Serial No.:** | S/N.: /<br>☐ Production ☒ Pre-Production ☐ Engineering |
| **FCC Classification:** | Unlicensed National Information Infrastructure (UNII) |

# 1. INTRODUCTION

## 1.1. Scope

Measurement and determination of electromagnetic emissions (EMC) of radio frequency devices including intentional and/or unintentional radiators for compliance with the technical rules and regulations of the Federal Communications Commission and the Innovation, Science and Economic Development Canada.

## 1.2. Fangguang Test Location

These measurement tests were performed at the Fangguang Inspection and testing Co.,LTD located at 200 Linghu Avenue, Xinwu District, Wuxi City. The detailed description of the measurement facility was found to be in compliance with the requirements of ANSI C63.4-2014.

# 2. PRODUCT INFORMATION

## 2.1. Equipment Description

| | |
|---|---|
| Product Name: | WiFi module |
| Model Name: | WXT5CM2803 |
| Trade Mark: | mindray |
| Input Voltage Range: | DC 3.3V |
| Wi-Fi Specification: | 802.11ax-HE20/ax-HE40/ax-HE80 |

Note:

There are three types of antennas for the WiFi module. The antennas are RD542109NB87-1, RD542109NB87-2 and RD542109NB87-3.

## 2.2. Product Specification Subjective to this Report

| | |
|---|---|
| Frequency Range: | 5925MHz ~ 6425MHz<br>6425MHz ~ 6525MHz<br>6525MHz ~ 6875MHz<br>6875MHz ~ 7125MHz |
| Type of Modulation: | 802.11ax: OFDM/BPSK/QPSK/16QAM/64QAM/256QAM/1024QAM |
| Data Rate: | 802.11ax: up to 1201Mbps |
| Antenna Type: | FPC dipole |
| Antenna Gain: | 5925MHz ~ 6425MHz:<br>RD542109NB87-1 Antenna: Ant1 3.9dBi, Ant2 3.9dBi<br>RD542109NB87-2 Antenna: Ant1 3.36dBi, Ant2 3.36dBi<br>RD542109NB87-3 Antenna: Ant1 2.64dBi, Ant2 2.64dBi<br>6425MHz ~ 7125MHz:<br>RD542109NB87-1 Antenna: Ant1 4.92dBi, Ant2 4.92dBi<br>RD542109NB87-2 Antenna: Ant1 3.61dBi, Ant2 3.61dBi<br>RD542109NB87-3 Antenna: Ant1 1.93dBi, Ant2 1.93dBi |

## 2.3. Operation Frequencies and Channel List

**802.11ax-HE20**

5925MHz ~ 6425MHz

| Channel | Frequency (MHz) | Channel | Frequency (MHz) | Channel | Frequency (MHz) |
|---|---|---|---|---|---|
| 1 | 5955 | 5 | 5975 | 9 | 5995 |
| 13 | 6015 | 17 | 6035 | 21 | 6055 |

| | | | | | |
|---|---|---|---|---|---|
| 25 | 6075 | 29 | 6095 | 33 | 6115 |
| 37 | 6135 | 41 | 6155 | 45 | 6175 |
| 49 | 6195 | 53 | 6215 | 57 | 6235 |
| 61 | 6255 | 65 | 6275 | 69 | 6295 |
| 73 | 6315 | 77 | 6335 | 81 | 6355 |
| 85 | 6375 | 89 | 6395 | 93 | 6415 |

6425MHz ~ 6525MHz

| Channel | Frequency (MHz) | Channel | Frequency (MHz) | Channel | Frequency (MHz) |
|---|---|---|---|---|---|
| 97 | 6535 | 101 | 6455 | 105 | 6475 |
| 109 | 6495 | 113 | 6515 | -- | -- |

6525MHz ~ 6875MHz

| Channel | Frequency (MHz) | Channel | Frequency (MHz) | Channel | Frequency (MHz) |
|---|---|---|---|---|---|
| 117 | 6535 | 121 | 6555 | 125 | 6575 |
| 129 | 6595 | 133 | 6615 | 137 | 6635 |
| 141 | 6655 | 145 | 6675 | 149 | 6695 |
| 153 | 6715 | 157 | 6735 | 161 | 6755 |
| 165 | 6775 | 169 | 6795 | 173 | 6815 |
| 177 | 6835 | 181 | 1855 | -- | -- |

6875MHz ~ 7125MHz

| Channel | Frequency (MHz) | Channel | Frequency (MHz) | Channel | Frequency (MHz) |
|---|---|---|---|---|---|
| 189 | 6895 | 193 | 6915 | 197 | 6935 |
| 201 | 6955 | 205 | 6975 | 209 | 6995 |
| 213 | 7015 | 217 | 7035 | 221 | 7055 |
| 225 | 7075 | 229 | 7095 | 233 | 7115 |

**802.11ax-HE40**

5925MHz ~ 6425MHz

| Channel | Frequency (MHz) | Channel | Frequency (MHz) | Channel | Frequency (MHz) |
|---|---|---|---|---|---|

| | | | | | |
|---|---|---|---|---|---|
| 3 | 5965 | 11 | 6005 | 19 | 6045 |
| 27 | 6085 | 35 | 6125 | 43 | 6165 |
| 51 | 6205 | 59 | 6245 | 67 | 6285 |
| 75 | 6325 | 83 | 6365 | 91 | 6405 |

6425MHz ~ 6525MHz

| Channel | Frequency (MHz) | Channel | Frequency (MHz) | Channel | Frequency (MHz) |
|---|---|---|---|---|---|
| 99 | 6445 | 107 | 6485 | -- | -- |

6525MHz ~ 6875MHz

| Channel | Frequency (MHz) | Channel | Frequency (MHz) | Channel | Frequency (MHz) |
|---|---|---|---|---|---|
| 123 | 6565 | 131 | 6605 | 139 | 6645 |
| 147 | 6685 | 155 | 6725 | 163 | 6765 |
| 171 | 6805 | 179 | 6845 | -- | -- |

6875MHz ~ 7125MHz

| Channel | Frequency (MHz) | Channel | Frequency (MHz) | Channel | Frequency (MHz) |
|---|---|---|---|---|---|
| 195 | 6925 | 203 | 6965 | 211 | 7005 |
| 219 | 7045 | 227 | 7085 | -- | -- |

**802.11ax-HE80**

5925MHz ~ 6425MHz

| Channel | Frequency (MHz) | Channel | Frequency (MHz) | Channel | Frequency (MHz) |
|---|---|---|---|---|---|
| 7 | 5985 | 23 | 6065 | 39 | 6145 |
| 55 | 6225 | 71 | 6305 | 87 | 6385 |

6425MHz ~ 6525MHz

| Channel | Frequency (MHz) | Channel | Frequency (MHz) | Channel | Frequency (MHz) |
|---|---|---|---|---|---|
| 103 | 6465 | -- | -- | -- | -- |

6525MHz ~ 6875MHz

| Channel | Frequency | Channel | Frequency | Channel | Frequency |
|---|---|---|---|---|---|

| | (MHz) | | (MHz) | | (MHz) |
|---|---|---|---|---|---|
| 135 | 6625 | 151 | 6705 | 167 | 6785 |

6875MHz ~ 7125MHz

| Channel | Frequency (MHz) | Channel | Frequency (MHz) | Channel | Frequency (MHz) |
|---|---|---|---|---|---|
| 199 | 6945 | 215 | 7025 | -- | -- |

## 2.4. Description of Available Antennas

1) For Antenna RD542109NB87-1

| Antenna | Frequency Band (GHz) | Product Number | Tx Paths | Antenna |
|---|---|---|---|---|
| FPC Antenna | 2.4&5&6 | WiFi module | 2 | Ant 1+Ant 2 |

| Antenna | Frequency Band (MHz) | Tx Paths | Per Chain Max Antenna Gain (dBi) | | Beam Forming Directional Gain (dBi) | Directional Gain (dBi) |
|---|---|---|---|---|---|---|
| | | | Ant 0 | Ant 1 | | |
| WIFI Ant 1+Ant 2 | 2412 ~2462 | 2 | -0.68 | -0.68 | Nonsupport | 2.33 |
| | 5150 ~ 5250<br>5250 ~ 5350<br>5450 ~ 5725<br>5725 ~ 5850 | 2 | 3.29 | 3.29 | Nonsupport | 6.30 |
| | 5925 ~ 6425 | 2 | 3.90 | 3.90 | Nonsupport | 6.91 |
| | 6425 ~ 7125 | 2 | 4.92 | 4.92 | Nonsupport | 7.94 |

2) For Antenna RD542109NB87-2

| Antenna | Frequency Band (GHz) | Product Number | Tx Paths | Antenna |
|---|---|---|---|---|
| FPC Antenna | 2.4&5&6 | WiFi module | 2 | Ant 1+Ant 2 |

| Antenna | Frequency Band (MHz) | Tx Paths | Per Chain Max Antenna Gain (dBi) | | Beam Forming Directional Gain (dBi) | Directional Gain (dBi) |
|---|---|---|---|---|---|---|
| | | | Ant 0 | Ant 1 | | |

| | | | | | | |
|---|---|---|---|---|---|---|
| WIFI Ant 1+Ant 2 | 2412 ~2462 | 2 | 2.05 | 2.05 | Nonsupport | 5.06 |
| | 5150 ~ 5250<br>5250 ~ 5350<br>5450 ~ 5725<br>5725 ~ 5850 | 2 | 3.17 | 3.17 | Nonsupport | 6.18 |
| | 5925 ~ 6425 | 2 | 3.36 | 3.36 | Nonsupport | 6.37 |
| | 6425 ~ 7125 | 2 | 3.61 | 3.61 | Nonsupport | 6.62 |

3) For Antenna RD542109NB87-3

| Antenna | Frequency Band (GHz) | Product Number | Tx Paths | Antenna |
|---|---|---|---|---|
| FPC Antenna | 2.4&5&6 | WiFi module | 2 | Ant 1+Ant 2 |

| Antenna | Frequency Band (MHz) | Tx Paths | Per Chain Max Antenna Gain (dBi) | | Beam Forming Directional Gain (dBi) | Directional Gain (dBi) |
|---|---|---|---|---|---|---|
| | | | Ant 0 | Ant 1 | | |
| WIFI Ant 1+Ant 2 | 2412 ~2462 | 2 | 2.45 | 2.45 | Nonsupport | 5.46 |
| | 5150 ~ 5250<br>5250 ~ 5350<br>5450 ~ 5725<br>5725 ~ 5850 | 2 | 2.77 | 2.77 | Nonsupport | 5.78 |
| | 5925 ~ 6425 | 2 | 2.64 | 2.64 | Nonsupport | 5.65 |
| | 6425 ~ 7125 | 2 | 1.93 | 1.93 | Nonsupport | 4.94 |

Note：

Unequal Antenna gains, with equal transmit powers. For Antenna gains given by $G_1$, $G_2$, …, $G_N$ dBi transmit signals are correlated, then

- Directional gain = $10*\log[(10^{G1/20} + 10^{G2/20} + \ldots + 10^{GN/20})^2/N_{ANT}]$ dBi [Note the “20”s in the denominator of each exponent and the square of the sum of terms; the object is to combine the signal levels coherently.]
- Directional Gain(2.4G) = $10*\log[(10^{-0.68/20} + 10^{-0.68/20})^2/2]$ = 2.33 dBi
- Directional Gain(2.4G) = $10*\log[(10^{2.05/20} + 10^{2.05/20})^2/2]$ = 5.06 dBi
- Directional Gain(2.4G) = $10*\log[(10^{2.45/20} + 10^{2.45/20})^2/2]$ = 5.46 dBi
- Directional Gain(5G) = $10*\log[(10^{3.29/20} + 10^{3.29/20})^2/2]$ = 6.30 dBi
- Directional Gain(5G) = $10*\log[(10^{3.17/20} + 10^{3.17/20})^2/2]$ = 6.18 dBi

- Directional Gain(5G) = $10*\log[(10^{2.77/20} + 10^{2.77/20})^2/2]$ = 5.78 dBi
- Directional Gain(6G) = $10*\log[(10^{3.90/20} + 10^{3.90/20})^2/2]$ = 6.91 dBi
- Directional Gain(6G) = $10*\log[(10^{3.36/20} + 10^{3.36/20})^2/2]$ = 6.37 dBi
- Directional Gain(6G) = $10*\log[(10^{2.64/20} + 10^{2.64/20})^2/2]$ = 5.65 dBi
- Directional Gain(6G) = $10*\log[(10^{4.92/20} + 10^{4.92/20})^2/2]$ = 7.94 dBi
- Directional Gain(6G) = $10*\log[(10^{3.61/20} + 10^{3.61/20})^2/2]$ = 6.62 dBi
- Directional Gain(6G) = $10*\log[(10^{1.93/20} + 10^{1.93/20})^2/2]$ = 4.94 dBi

## 2.5. Device Capabilities

This device contains the following capabilities:

2.4GHz WLAN (DTS)&5GHz WLAN (UNII) &6GHz WLAN

**Note:** 6GHz operation is possible in 20MHz, 40MHz and 80MHz channel bandwidths. The maximum achievable duty cycles for all modes were determined based on measurements performed on a spectrum analyzer in zero-span mode with RBW = 8MHz, VBW = 8MHz, and detector = average per the guidance of Section B) 2) b) of KDB 789033 D02v02r01. The RBW and VBW were both greater than 50/T, where T is the minimum transmission duration, and the number of sweep points across T was greater than 100. The duty cycles are as follows:

Operating Frequency 5925-6425MHz:

| Test Mode | Antenna | Channel | Transmission Duration [ms] | Transmission Period [ms] | Duty Cycle [%] |
|---|---|---|---|---|---|
| 11AX20MIMO | Ant1 | 5955 | 30.00 | 30.00 | 100.00 |
| | Ant2 | 5955 | 30.00 | 30.00 | 100.00 |
| | Ant1 | 6175 | 30.00 | 30.00 | 100.00 |
| | Ant2 | 6175 | 30.00 | 30.00 | 100.00 |
| | Ant1 | 6415 | 30.00 | 30.00 | 100.00 |
| | Ant2 | 6415 | 30.00 | 30.00 | 100.00 |
| 11AX40MIMO | Ant1 | 5965 | 30.00 | 30.00 | 100.00 |
| | Ant2 | 5965 | 30.00 | 30.00 | 100.00 |
| | Ant1 | 6165 | 30.00 | 30.00 | 100.00 |
| | Ant2 | 6165 | 30.00 | 30.00 | 100.00 |
| | Ant1 | 6405 | 30.00 | 30.00 | 100.00 |
| | Ant2 | 6405 | 30.00 | 30.00 | 100.00 |
| 11AX80MIMO | Ant1 | 5985 | 30.00 | 30.00 | 100.00 |
| | Ant2 | 5985 | 30.00 | 30.00 | 100.00 |
| | Ant1 | 6145 | 30.00 | 30.00 | 100.00 |
| | Ant2 | 6145 | 30.00 | 30.00 | 100.00 |
| | Ant1 | 6385 | 30.00 | 30.00 | 100.00 |

| | | | | | |
|---|---|---|---|---|---|
| | Ant2 | 6385 | 30.00 | 30.00 | 100.00 |

Operating Frequency 6425-6525MHz:

| Test Mode | Antenna | Channel | Transmission Duration [ms] | Transmission Period [ms] | Duty Cycle [%] |
|---|---|---|---|---|---|
| 11AX20MIMO | Ant1 | 6435 | 30.00 | 30.00 | 100.00 |
| | Ant2 | 6435 | 30.00 | 30.00 | 100.00 |
| | Ant1 | 6475 | 30.00 | 30.00 | 100.00 |
| | Ant2 | 6475 | 30.00 | 30.00 | 100.00 |
| | Ant1 | 6515 | 30.00 | 30.00 | 100.00 |
| | Ant2 | 6515 | 30.00 | 30.00 | 100.00 |
| 11AX40MIMO | Ant1 | 6445 | 30.00 | 30.00 | 100.00 |
| | Ant2 | 6445 | 30.00 | 30.00 | 100.00 |
| | Ant1 | 6485 | 30.00 | 30.00 | 100.00 |
| | Ant2 | 6485 | 30.00 | 30.00 | 100.00 |
| 11AX80MIMO | Ant1 | 6465 | 30.00 | 30.00 | 100.00 |
| | Ant2 | 6465 | 30.00 | 30.00 | 100.00 |

Operating Frequency 6525-6875MHz:

| Test Mode | Antenna | Channel | Transmission Duration [ms] | Transmission Period [ms] | Duty Cycle [%] |
|---|---|---|---|---|---|
| 11AX20MIMO | Ant1 | 6535 | 30.00 | 30.00 | 100.00 |
| | Ant2 | 6535 | 30.00 | 30.00 | 100.00 |
| | Ant1 | 6695 | 30.00 | 30.00 | 100.00 |
| | Ant2 | 6695 | 30.00 | 30.00 | 100.00 |
| | Ant1 | 6855 | 30.00 | 30.00 | 100.00 |
| | Ant2 | 6855 | 30.00 | 30.00 | 100.00 |
| 11AX40MIMO | Ant1 | 6565 | 30.00 | 30.00 | 100.00 |
| | Ant2 | 6565 | 30.00 | 30.00 | 100.00 |
| | Ant1 | 6685 | 30.00 | 30.00 | 100.00 |
| | Ant2 | 6685 | 30.00 | 30.00 | 100.00 |
| | Ant1 | 6845 | 30.00 | 30.00 | 100.00 |
| | Ant2 | 6845 | 30.00 | 30.00 | 100.00 |
| 11AX80MIMO | Ant1 | 6625 | 30.00 | 30.00 | 100.00 |
| | Ant2 | 6625 | 30.00 | 30.00 | 100.00 |
| | Ant1 | 6705 | 30.00 | 30.00 | 100.00 |
| | Ant2 | 6705 | 30.00 | 30.00 | 100.00 |

| | | | | | |
|---|---|---|---|---|---|
| | Ant1 | 6785 | 30.00 | 30.00 | 100.00 |
| | Ant2 | 6785 | 30.00 | 30.00 | 100.00 |

Operating Frequency 6875-7125MHz:

| Test Mode | Antenna | Channel | Transmission Duration [ms] | Transmission Period [ms] | Duty Cycle [%] |
|---|---|---|---|---|---|
| 11AX20MIMO | Ant1 | 6895 | 30.00 | 30.00 | 100.00 |
| | Ant2 | 6895 | 30.00 | 30.00 | 100.00 |
| | Ant1 | 6995 | 30.00 | 30.00 | 100.00 |
| | Ant2 | 6995 | 30.00 | 30.00 | 100.00 |
| | Ant1 | 7115 | 30.00 | 30.00 | 100.00 |
| | Ant2 | 7115 | 30.00 | 30.00 | 100.00 |
| 11AX40MIMO | Ant1 | 6925 | 30.00 | 30.00 | 100.00 |
| | Ant2 | 6925 | 30.00 | 30.00 | 100.00 |
| | Ant1 | 6965 | 30.00 | 30.00 | 100.00 |
| | Ant2 | 6965 | 30.00 | 30.00 | 100.00 |
| | Ant1 | 7085 | 30.00 | 30.00 | 100.00 |
| | Ant2 | 7085 | 30.00 | 30.00 | 100.00 |
| 11AX80MIMO | Ant1 | 6945 | 30.00 | 30.00 | 100.00 |
| | Ant2 | 6945 | 30.00 | 30.00 | 100.00 |
| | Ant1 | 7025 | 30.00 | 30.00 | 100.00 |
| | Ant2 | 7025 | 30.00 | 30.00 | 100.00 |

Test Graphs see Appendix C.

## 2.6. Test Software

The test utility software used during testing was “Putty.exe”, Power Parameter Value:

| Test Mode | MIMO | | | | | | | | | | | |
|---|---|---|---|---|---|---|---|---|---|---|---|---|
| | 5925-6425 MHz | | | 6425-6525 MHz | | | 6525-6875 MHz | | | 6875-7125 MHz | | |
| 802.11ax-HE20 | 3 | 4 | 2 | 1 | 1 | 1 | 2 | 4 | 2 | 2 | 1 | 2 |
| 802.11ax-HE40 | 4 | 4 | 3 | 2 | -- | 2 | 2 | 4 | 4 | 2 | 3 | 3 |
| 802.11ax-HE80 | 5 | 7 | 5 | -- | 4 | -- | 6 | 8 | 8 | 4 | -- | 4 |

## 2.7. Test Mode

The EUT not support partial RU’s and channel puncturing mode.

| | |
|---|---|
| Test Mode | Mode 1: Transmit by 802.11ax- HE20 MIMO |
| | Mode 2: Transmit by 802.11ax- HE40 MIMO |
| | Mode 3: Transmit by 802.11ax- HE80 MIMO |

Final test modes are considering the modulation and worse data rates as below table.

| Modulation | Data Tate |
|---|---|
| 802.11ax- HE20 | MCS0 |
| 802.11ax- HE40 | MCS0 |
| 802.11ax- HE80 | MCS0 |

The test channel number:

| Operating Frequency | 5925-6425MHz | 6425-6525MHz | 6525-6875MHz | 6875-7125MHz |
|---|---|---|---|---|
| | 802.11ax- HE20 | 802.11ax- HE20 | 802.11ax- HE20 | 802.11ax- HE20 |
| Low | 001 | 097 | 117 | 189 |
| Middle | 045 | 105 | 149 | 209 |
| High | 093 | 113 | 181 | 233 |

| Operating Frequency | 5925-6425MHz | 6425-6525MHz | 6525-6875MHz | 6875-7125MHz |
|---|---|---|---|---|
| | 802.11ax- HE40 | 802.11ax- HE40 | 802.11ax- HE40 | 802.11ax- HE40 |
| Low | 003 | 099 | 123 | 195 |
| Middle | 043 | -- | 147 | 103 |
| High | 091 | 107 | 179 | 227 |

| Operating Frequency | 5925-6425MHz | 6425-6525MHz | 6525-6875MHz | 6875-7125MHz |
|---|---|---|---|---|
| | 802.11ax- HE80 | 802.11ax- HE80 | 802.11ax- HE80 | 802.11ax- HE80 |

| | | | | |
|---|---|---|---|---|
| Low | 007 | -- | 135 | 199 |
| Middle | 039 | 103 | 151 | -- |
| High | 087 | -- | 167 | 215 |

## 2.8. Test Configuration

The EUT must comply with the requirement of the following standards:

1) FCC Part 15.407

2) FCC KDB 789033 D02

3) FCC KDB 987594 D02

4) FCC KDB 662911 D01

5)ANSI C63.10-2013

The EUT was tested per the guidance of KDB 789033 D02v02r01. ANSI C63.10-2013 was used to reference the appropriate EUT setup for radiated spurious emissions testing and AC line conducted testing.

## 2.9. EMI Suppression Device(s)/Modifications

No EMI suppression device(s) were added and/or no modifications were made during testing.

## 2.10. Labeling Requirements

Per 2.1074 & 15.19; Docket 95-19

The label shall be permanently affixed at a conspicuous location on the device; instruction manual or pamphlet supplied to the user and be readily visible to the purchaser at the time of purchase. However, when the device is so small wherein placement of the label with specified statement is not practical, only the FCC ID must be displayed on the device per Section 15.19(a)(5). Please see attachment for FCC ID label and label location.

# 3. DESCRIPTION OF TEST

## 3.1. Evaluation Procedure

The measurement procedures described in the American National Standard for Testing Unlicensed Wireless Devices (ANSI C63.10-2013), and the guidance provided in KDB 789033 D02v02r01 were used in the measurement of the EUT.

**Deviation from measurement procedure…….....None**

## 3.2. AC Line Conducted Emissions

The line-conducted facility is located inside a 9'x4'x3' shielded enclosure. A 1m x 2m wooden table 80cm high is placed 40cm away from the vertical wall and 80cm away from the sidewall of the shielded room. Two 10kHz-30MHz, 50Ω/50uH Line-Impedance Stabilization Networks (LISNs) are bonded to the shielded room floor. Power to the LISNs is filtered by external high-current high-insertion loss power line filters. These filters attenuate ambient signal noise from entering the measurement lines. These filters are also bonded to the shielded enclosure.

The EUT is powered from one LISN and the support equipment is powered from the second LISN. All interconnecting cables more than 1 meter were shortened to a 1 meter length by non-inductive bundling (serpentine fashion) and draped over the back edge of the test table. All cables were at least 40cm above the horizontal reference ground-plane. Power cables for support equipment were routed down to the second LISN while ensuring that that cables were not draped over the second LISN.

Sufficient time for the EUT, support equipment, and test equipment was allowed in order for them to warm up to their normal operating condition. The RF output of the LISN was connected to the receiver and exploratory measurements were made to determine the frequencies producing the maximum emission from the EUT. The receiver was scanned from 150kHz to 30MHz. The detector function was set to peak mode for exploratory measurements while the bandwidth of the analyzer was set to 9kHz. The EUT, support equipment, and interconnecting cables were arranged and manipulated to maximize each emission. Each emission was also maximized by varying: power lines, the mode of operation or data exchange speed, or support equipment whichever determined the worst-case emission. Once the worst case emissions have been identified, the one EUT cable configuration/arrangement and mode of operation that produced these emissions are used for final measurements on the same test site. The analyzer is set to CISPR quasi-peak and average detectors with a 9kHz resolution bandwidth for final measurements.

An extension cord was used to connect to a single LISN which powered by EUT. The extension cord was calibrated with LISN, the impedance and insertion loss are compliance with the requirements as stated in ANSI C63.10-2013.

Line conducted emissions test results are shown in Section 7.11.

## 3.3. Radiated Emissions

The radiated test facilities consisted of an indoor 3 meter semi-anechoic chamber used for final measurements and exploratory measurements, when necessary. The measurement area is contained within the semi-anechoic chamber which is shielded from any ambient interference. For measurements above 1GHz absorbers are arranged on the floor between the turn table and the antenna mast in such a way so as to maximize the reduction of reflections. For measurements below 1GHz, the absorbers are removed. An MF Model 210SS turntable is used for radiated measurement. It is a continuously rotatable, remote controlled, metallic turntable and 2 meters (6.56 ft.) in diameter. The turn table is flush with the raised floor of the chamber in order to maintain its function as a ground plane. An 80cm high PVC support structure is placed on top of the turntable.

For all measurements, the spectrum was scanned through all EUT azimuths and from 1 to 4 meter receive antenna height using a broadband antenna from 30MHz up to the upper frequency shown in 15.33(b)(1) depending on the highest frequency generated or used in the device or on which the device operates or tunes. For frequencies above 1GHz, linearly polarized double ridge horn antennas were used. For frequencies below 30MHz, a calibrated loop antenna was used. When exploratory measurements were necessary, they were performed at 1 meter test distance inside the semi-anechoic chamber using broadband antennas, broadband amplifiers, and spectrum analyzers to determine the frequencies and modes producing the maximum emissions. Sufficient time for the EUT, support equipment, and test equipment was allowed in order for them to warm up to their normal operating condition. The test set-up for frequencies below 1GHz was placed on top of the 0.8 meter high, 1 x 1.5 meter table; and test set-up for frequencies 1-40GHz was placed on top of the 1.5 meter high, 1 x 1.5 meter table. The EUT, support equipment, and interconnecting cables were arranged and manipulated to maximize each emission. Appropriate precaution was taken to ensure that all emissions from the EUT were maximized and investigated. The system configuration, clock speed, mode of operation or video resolution, if applicable, turntable azimuth, and receive antenna height was noted for each frequency found.

Final measurements were made in the semi-anechoic chamber using calibrated, linearly polarized broadband and horn antennas. The test setup was configured to the setup that produced the worst case emissions. The spectrum analyzer was set to investigate all frequencies required for testing to compare the highest radiated disturbances with respect to the specified limits. The turntable containing the EUT was rotated through 360 degrees and the height of the receive antenna was varied 1 to 4 meters and stopped at the azimuth and height producing the maximum emission. Each emission was maximized by changing the orientation of the EUT through three orthogonal planes and changing the polarity of the receive antenna, whichever produced the worst-case emissions. According to 3dB Beam-Width of horn antenna, the horn antenna should be always directed to the EUT when rising height.

# 4. ANTENNA REQUIREMENTS

**Excerpt from §15.203 of the FCC Rules/Regulations:**

"An intentional radiator antenna shall be designed to ensure that no antenna other than that furnished by the responsible party can be used with the device. The use of a permanently attached antenna or of an antenna that uses a unique coupling to the intentional radiator shall be considered sufficient to comply with the provisions of this section."

- Use a unique coupling to the intentional radiator.

# 5. TEST EQUIPMENT CALIBRATION DATE

Conducted Emissions

| Instrument | Manufacturer | Type No. | Asset No. | Cali. Interval | Cali. Due Date |
|---|---|---|---|---|---|
| EMI Test Receiver | R&S | ESR3 | FWXGJC-2016-181 | 1 year | 2025/03/07 |
| Two-Line V-Network | R&S | ENV 216 | FWXGJC-2016-182 | 1 year | 2025/04/28 |
| Thermohygrometer | Yuhuaze | HTC-1 | FWXDA-2016-385 | 1 year | 2025/02/25 |

Radiated Emission

| Instrument | Manufacturer | Type No. | Asset No. | Cali. Interval | Cali. Due Date |
|---|---|---|---|---|---|
| Loop Antenna | Schwarzbeck | FMZB 1519B | FWXGJC-2018-015 | 1 year | 2025/07/23 |
| Bi-Log Antenna | R&S | HL562E | FWXGJC-2016-267-06 | 1 year | 2025/03/02 |
| Broadband Horn Antenna | R&S | HF907 | FWXGJC-2016-267-07 | 1 year | 2025/03/01 |
| Broadband Horn Antenna | Schwarzbeck | BBHA9170 | FWXGJC-2018-016 | 1 year | 2025/07/26 |
| EMI Receiver | R&S | ESR26 | FWXGJC-2016-267-01 | 1 year | 2025/07/26 |
| Pre-Amplifier | R&S | SCU-18D | FWXGJC-2016-267-05 | 1 year | 2025/07/23 |
| Pre-Amplifier | R&S | EMC184055 SE | FWXGJC-2018-018 | 1 year | 2025/04/13 |
| Thermohygrometer | Yuhuaze | HTC-1 | FWXDA-2016-386 | 1 year | 2024/11/03 |
| Anechoic Chamber | Aimuke | EMCCT-3 | FWXGJC-2016-270 | 3 year | 2026/04/05 |

Conducted Test Equipment

| Instrument | Manufacturer | Type No. | Asset No. | Cali. Interval | Cali. Due Date |
|---|---|---|---|---|---|
| EXA Signal Analyzer | Keysight | N9010B | FWXGJC-2018-010 | 1 year | 2025/03/02 |
| RF Control Unit | Toncend | JS0806-2 | FWXGJC-2018-013 | 1 year | 2025/05/19 |
| Signal Generator | R&S | SMM100A | SZTX2022-G042 | 1 year | 2025/08/23 |
| Thermohygrometer | Yuhuaze | HTC-1 | FWXDA-2016-385 | 1 year | 2025/02/25 |

| Test Software | Manufacturer | Version | Asset No. | Function |
|---|---|---|---|---|
| EMI Test Software | tonscend | / | / | / |

# 6. MEASUREMENT UNCERTAINTY

Where relevant, the following test uncertainty levels have been estimated for tests performed on the EUT as specified in CISPR 16-4-2. This uncertainty represents an expanded uncertainty expressed at approximately the 95% confidence level using a coverage factor of k = 2.

| |
|---|
| AC Conducted Emission Measurement |
| Measuring Uncertainty for a Level of Confidence of 95% (U=2Uc(y)):<br>2.05dB |
| Radiated Emission Measurement |
| Measuring Uncertainty for a Level of Confidence of 95% (U=2Uc(y)):<br>30MHz-1GHz: 3.06dB<br>1GHz-12.75GHz: 4.13dB |
| Spurious Emissions, Conducted |
| Measuring Uncertainty for a Level of Confidence of 95% (U=2Uc(y)):<br>30MHz-1GHz: 1.00 dB<br>1GHz-26.5GHz: 1.30 dB |
| Output Power |
| Measuring Uncertainty for a Level of Confidence of 95% (U=2Uc(y)):<br>0.60dB |
| Power Spectrum Density |
| Measuring Uncertainty for a Level of Confidence of 95% (U=2Uc(y)):<br>0.80dB |
| Occupied Bandwidth |
| Measuring Uncertainty for a Level of Confidence of 95% (U=2Uc(y)):<br>0.20MHz |

# 7. TEST RESULT

## 7.1. Summary

| FCC Section(s) | Test Description | Test Limit | Test Condition | Test Result | Reference |
|---|---|---|---|---|---|
| 15.407(a) | 26dB Emission Bandwidth | < 320MHz | Conducted | Pass | Section 7.2 |
| 2.1049 | 99% Occupied Bandwidth | < 320MHz | | Pass | Section 7.3 |
| 15.407(a)(8) | Maximum Conducted Output Power&Fundamental Maximum e.r.i.p. | ≤ 24 dBm | | Pass | Section 7.4 |
| 15.407(a)(8) | Maximum Power Spectral Density of e.i.r.p. | ≤ -1 dBm/MHz | | Pass | Section 7.5 |
| 15.407(b)(7) | In-Band Emissions(Mask) | Detail see section 6.6 | | Pass | Section 7.6 |
| 15.407(d)(6) | Contention-Based Protocol | Detail see section 6.7 | | Pass | Section 7.7 |
| 15.407(g) | Frequency Stability | N/A | | Pass | Section 7.8 |
| 15.407(b)(6) | Unwanted Emissions | ≤ -27dBm/MHz EIRP | Radiated | Pass | Section 7.9 |
| 15.205, 15.209 15.407(b)(5), (6), (7) | General Field Strength Limits (Restricted Bands and Radiated Emission Limits) | Emissions in restricted bands must meet the radiated limits detailed in 15.209 | | Pass | |
| 15.207 | AC Conducted Emissions 150kHz - 30MHz | < FCC 15.207 limits | Line Conducted | Pass | Section 7.10 |

**Notes:**

1) All channels, modes, and modulations/data rates were investigated among all UNII bands. The test results shown in the following sections represent the worst case emissions.
2) The analyzer plots shown in this section were all taken with a correction table loaded into the analyzer. The correction table was used to account for the losses of the cables and attenuators used as part of the system to connect the EUT to the analyzer at all frequencies of interest.

## 7.2. 26dB Bandwidth Measurement and 99% Bandwidth

### 7.2.1. Test Limit

The maximum transmitter channel bandwidth for U–NII devices in the 5.925–7.125 GHz band is 320 megahertz.

### 7.2.2. Test Procedure used

KDB 789033 D02v02r01 – Section C.1

ANSI C63.10-2013- Section 12.4.1

### 7.2.3. Test Setting

1. The analyzers' automatic bandwidth measurement capability was used to perform the 26dB bandwidth measurement. The "X" dB bandwidth parameter was set to X = 26. The automatic bandwidth measurement function also has the capability of simultaneously measuring the 99% occupied bandwidth. The bandwidth measurement was not influenced by any intermediated power nulls in the fundamental emission.
2. RBW = approximately 1% of the emission bandwidth.
3. VBW ≥ 3 × RBW.
4. Detector = Peak.
5. Trace mode = max hold.

### 7.2.4. Test Setup

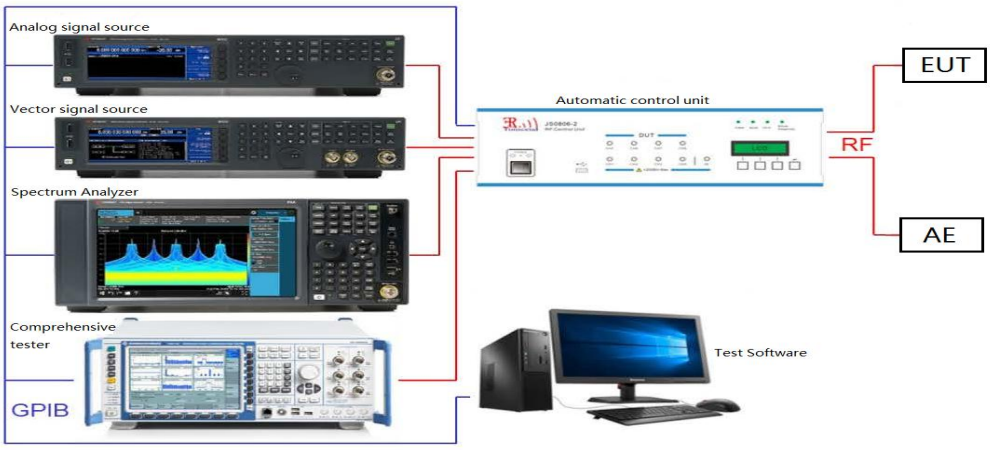

### 7.2.5. Test Result

Operating Frequency 5925-6425MHz:

| Test Mode | Antenna | Channel | 26db EBW [MHz] | FL[MHz] | FH[MHz] | Limit [MHz] | Verdict |
|---|---|---|---|---|---|---|---|
| 11AX20MIMO | Ant1 | 5955 | 21.520 | 5944.200 | 5965.720 | ≤320 | PASS |
| | Ant2 | 5955 | 21.440 | 5944.040 | 5965.480 | ≤320 | PASS |
| | Ant1 | 6175 | 21.440 | 6164.320 | 6185.760 | ≤320 | PASS |
| | Ant2 | 6175 | 21.320 | 6164.120 | 6185.440 | ≤320 | PASS |
| | Ant1 | 6415 | 21.280 | 6404.040 | 6425.320 | ≤320 | PASS |
| | Ant2 | 6415 | 21.720 | 6403.880 | 6425.600 | ≤320 | PASS |
| 11AX40MIMO | Ant1 | 5965 | 39.760 | 5945.080 | 5984.840 | ≤320 | PASS |
| | Ant2 | 5965 | 39.600 | 5945.080 | 5984.680 | ≤320 | PASS |
| | Ant1 | 6165 | 39.280 | 6145.240 | 6184.520 | ≤320 | PASS |
| | Ant2 | 6165 | 39.360 | 6145.320 | 6184.680 | ≤320 | PASS |
| | Ant1 | 6405 | 39.360 | 6385.240 | 6424.600 | ≤320 | PASS |
| | Ant2 | 6405 | 39.280 | 6385.320 | 6424.600 | ≤320 | PASS |
| 11AX80MIMO | Ant1 | 5985 | 80.160 | 5944.840 | 6025.000 | ≤320 | PASS |
| | Ant2 | 5985 | 80.160 | 5944.680 | 6024.840 | ≤320 | PASS |
| | Ant1 | 6145 | 80.160 | 6104.840 | 6185.000 | ≤320 | PASS |
| | Ant2 | 6145 | 80.000 | 6104.840 | 6184.840 | ≤320 | PASS |
| | Ant1 | 6385 | 80.160 | 6344.840 | 6425.000 | ≤320 | PASS |
| | Ant2 | 6385 | 80.000 | 6345.000 | 6425.000 | ≤320 | PASS |

Operating Frequency 6425-6525MHz:

| Test Mode | Antenna | Channel | 26db EBW [MHz] | FL[MHz] | FH[MHz] | Limit [MHz] | Verdict |
|---|---|---|---|---|---|---|---|
| 11AX20MIMO | Ant1 | 6435 | 21.320 | 6424.240 | 6445.560 | ≤320 | PASS |
| | Ant2 | 6435 | 21.240 | 6424.200 | 6445.440 | ≤320 | PASS |
| | Ant1 | 6475 | 21.080 | 6464.640 | 6485.720 | ≤320 | PASS |
| | Ant2 | 6475 | 20.760 | 6464.480 | 6485.240 | ≤320 | PASS |
| | Ant1 | 6515 | 21.200 | 6504.440 | 6525.640 | ≤320 | PASS |
| | Ant2 | 6515 | 21.320 | 6504.360 | 6525.680 | ≤320 | PASS |
| 11AX40MIMO | Ant1 | 6445 | 39.520 | 6425.160 | 6464.680 | ≤320 | PASS |
| | Ant2 | 6445 | 39.360 | 6425.160 | 6464.520 | ≤320 | PASS |
| | Ant1 | 6485 | 39.200 | 6465.400 | 6504.600 | ≤320 | PASS |
| | Ant2 | 6485 | 39.360 | 6465.320 | 6504.680 | ≤320 | PASS |
| 11AX80MIMO | Ant1 | 6465 | 80.160 | 6424.840 | 6505.000 | ≤320 | PASS |

| | | | | | | | |
|---|---|---|---|---|---|---|---|
| | Ant2 | 6465 | 80.000 | 6425.000 | 6505.000 | ≤320 | PASS |

Operating Frequency 6525-6875MHz:

| Test Mode | Antenna | Channel | 26db EBW [MHz] | FL[MHz] | FH[MHz] | Limit [MHz] | Verdict |
|---|---|---|---|---|---|---|---|
| 11AX20MIMO | Ant1 | 6535 | 21.640 | 6524.080 | 6545.720 | ≤320 | PASS |
| | Ant2 | 6535 | 21.640 | 6523.880 | 6545.520 | ≤320 | PASS |
| | Ant1 | 6695 | 21.440 | 6684.360 | 6705.800 | ≤320 | PASS |
| | Ant2 | 6695 | 21.720 | 6684.280 | 6706.000 | ≤320 | PASS |
| | Ant1 | 6855 | 21.160 | 6844.360 | 6865.520 | ≤320 | PASS |
| | Ant2 | 6855 | 21.360 | 6844.200 | 6865.560 | ≤320 | PASS |
| 11AX40MIMO | Ant1 | 6565 | 39.440 | 6545.160 | 6584.600 | ≤320 | PASS |
| | Ant2 | 6565 | 39.520 | 6545.080 | 6584.600 | ≤320 | PASS |
| | Ant1 | 6685 | 39.440 | 6665.240 | 6704.680 | ≤320 | PASS |
| | Ant2 | 6685 | 39.600 | 6665.160 | 6704.760 | ≤320 | PASS |
| | Ant1 | 6845 | 39.440 | 6825.240 | 6864.680 | ≤320 | PASS |
| | Ant2 | 6845 | 39.360 | 6825.240 | 6864.600 | ≤320 | PASS |
| 11AX80MIMO | Ant1 | 6625 | 80.160 | 6584.840 | 6665.000 | ≤320 | PASS |
| | Ant2 | 6625 | 80.000 | 6585.000 | 6665.000 | ≤320 | PASS |
| | Ant1 | 6705 | 80.160 | 6664.840 | 6745.000 | ≤320 | PASS |
| | Ant2 | 6705 | 79.840 | 6665.000 | 6744.840 | ≤320 | PASS |
| | Ant1 | 6785 | 80.160 | 6744.840 | 6825.000 | ≤320 | PASS |
| | Ant2 | 6785 | 79.840 | 6745.000 | 6824.840 | ≤320 | PASS |

Operating Frequency 6875-7125MHz:

| Test Mode | Antenna | Channel | 26db EBW [MHz] | FL[MHz] | FH[MHz] | Limit [MHz] | Verdict |
|---|---|---|---|---|---|---|---|
| 11AX20MIMO | Ant1 | 6895 | 21.720 | 6884.320 | 6906.040 | ≤320 | PASS |
| | Ant2 | 6895 | 21.320 | 6884.440 | 6905.760 | ≤320 | PASS |
| | Ant1 | 6995 | 21.480 | 6984.200 | 7005.680 | ≤320 | PASS |
| | Ant2 | 6995 | 21.120 | 6984.440 | 7005.560 | ≤320 | PASS |
| | Ant1 | 7115 | 21.600 | 7104.120 | 7125.720 | ≤320 | PASS |
| | Ant2 | 7115 | 21.520 | 7104.520 | 7126.040 | ≤320 | PASS |
| 11AX40MIMO | Ant1 | 6925 | 39.440 | 6905.160 | 6944.600 | ≤320 | PASS |
| | Ant2 | 6925 | 39.360 | 6905.160 | 6944.520 | ≤320 | PASS |
| | Ant1 | 6965 | 39.440 | 6945.160 | 6984.600 | ≤320 | PASS |
| | Ant2 | 6965 | 39.280 | 6945.240 | 6984.520 | ≤320 | PASS |

| | | | | | | | |
|---|---|---|---|---|---|---|---|
| | Ant1 | 7085 | 39.440 | 7065.080 | 7104.520 | ≤320 | PASS |
| | Ant2 | 7085 | 39.520 | 7065.160 | 7104.680 | ≤320 | PASS |
| 11AX80MIMO | Ant1 | 6945 | 80.000 | 6905.000 | 6985.000 | ≤320 | PASS |
| | Ant2 | 6945 | 80.000 | 6905.000 | 6985.000 | ≤320 | PASS |
| | Ant1 | 7025 | 80.320 | 6984.680 | 7065.000 | ≤320 | PASS |
| | Ant2 | 7025 | 79.840 | 6985.000 | 7064.840 | ≤320 | PASS |

Test Graphs see Appendix C.

## 7.3. 99% Occupied Bandwidth Measurement

### 7.3.1. Test Limit

The maximum transmitter channel bandwidth for U–NII devices in the 5.925–7.125 GHz band is 320 megahertz..

### 7.3.2. Test Procedure used

KDB 789033 D02v02r01 – Section D

ANSI C63.10-2013 - Section 6.9.3

### 7.3.3. Test Setting

1. Set center frequency to the nominal EUT channel center frequency.
2. Set span = 1.5 times to 5.0 times the OBW.
3. Set RBW = 1% to 5% of the OBW.
4. Set VBW ≥ 3 RBW.
5. Video averaging is not permitted. Where practical, a sample detection and single sweep mode shall be used. Otherwise, peak detection and max hold mode (until the trace stabilizes) shall be used.
6. Use the 99% power bandwidth function of the instrument (if available).

### 7.3.4. Test Setup

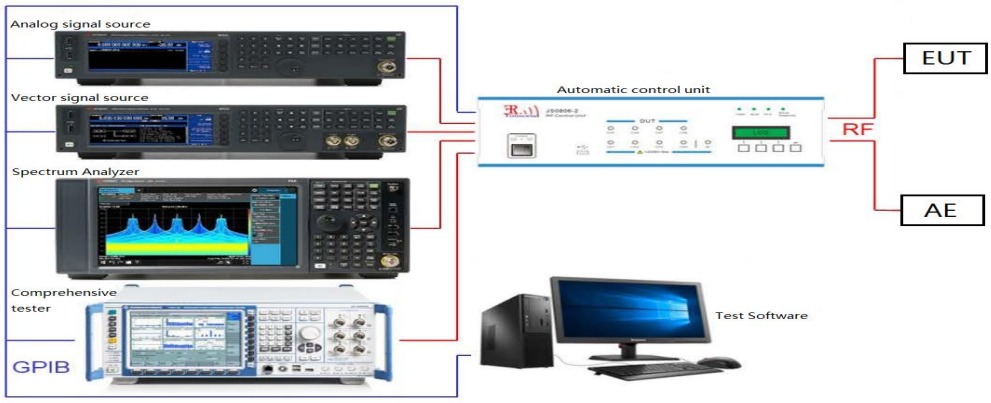

### 7.3.5. Test Result

Operating Frequency 5925-6425MHz:

| Test Mode | Antenna | Channel | OCB [MHz] | FL[MHz] | FH[MHz] | Limit [MHz] | Verdict |
|---|---|---|---|---|---|---|---|
| 11AX20MIMO | Ant1 | 5955 | 19.059 | 5945.3633 | 5964.4223 | ≤320 | PASS |
| | Ant2 | 5955 | 19.056 | 5945.3860 | 5964.4420 | ≤320 | PASS |
| | Ant1 | 6175 | 19.057 | 6165.3831 | 6184.4401 | ≤320 | PASS |
| | Ant2 | 6175 | 18.983 | 6165.3981 | 6184.3811 | ≤320 | PASS |
| | Ant1 | 6415 | 19.046 | 6405.3877 | 6424.4337 | ≤320 | PASS |
| | Ant2 | 6415 | 19.035 | 6405.3793 | 6424.4143 | ≤320 | PASS |
| 11AX40MIMO | Ant1 | 5965 | 37.538 | 5946.1226 | 5983.6606 | ≤320 | PASS |
| | Ant2 | 5965 | 37.601 | 5946.1977 | 5983.7987 | ≤320 | PASS |
| | Ant1 | 6165 | 37.402 | 6146.3033 | 6183.7053 | ≤320 | PASS |
| | Ant2 | 6165 | 37.317 | 6146.3163 | 6183.6333 | ≤320 | PASS |
| | Ant1 | 6405 | 37.522 | 6386.1697 | 6423.6917 | ≤320 | PASS |
| | Ant2 | 6405 | 37.405 | 6386.2928 | 6423.6978 | ≤320 | PASS |
| 11AX80MIMO | Ant1 | 5985 | 76.852 | 5946.4006 | 6023.2526 | ≤320 | PASS |
| | Ant2 | 5985 | 76.547 | 5946.5246 | 6023.0716 | ≤320 | PASS |
| | Ant1 | 6145 | 76.853 | 6106.5801 | 6183.4331 | ≤320 | PASS |
| | Ant2 | 6145 | 76.950 | 6106.2062 | 6183.1562 | ≤320 | PASS |
| | Ant1 | 6385 | 76.579 | 6346.8117 | 6423.3907 | ≤320 | PASS |
| | Ant2 | 6385 | 76.503 | 6346.9830 | 6423.4860 | ≤320 | PASS |

Operating Frequency 6425-6525MHz:

| Test Mode | Antenna | Channel | OCB [MHz] | FL[MHz] | FH[MHz] | Limit [MHz] | Verdict |
|---|---|---|---|---|---|---|---|
| 11AX20MIMO | Ant1 | 6435 | 19.108 | 6425.3580 | 6444.4660 | ≤320 | PASS |
| | Ant2 | 6435 | 19.086 | 6425.3614 | 6444.4474 | ≤320 | PASS |
| | Ant1 | 6475 | 19.028 | 6465.3720 | 6484.4000 | ≤320 | PASS |
| | Ant2 | 6475 | 19.052 | 6465.3548 | 6484.4068 | ≤320 | PASS |
| | Ant1 | 6515 | 19.040 | 6505.3829 | 6524.4229 | ≤320 | PASS |
| | Ant2 | 6515 | 18.989 | 6505.4465 | 6524.4355 | ≤320 | PASS |
| 11AX40MIMO | Ant1 | 6445 | 37.467 | 6426.1045 | 6463.5715 | ≤320 | PASS |
| | Ant2 | 6445 | 37.516 | 6426.1325 | 6463.6485 | ≤320 | PASS |
| | Ant1 | 6485 | 37.596 | 6466.1227 | 6503.7187 | ≤320 | PASS |
| | Ant2 | 6485 | 37.567 | 6466.1110 | 6503.6780 | ≤320 | PASS |

| | | | | | | | |
|---|---|---|---|---|---|---|---|
| 11AX80MIMO | Ant1 | 6465 | 76.905 | 6426.3073 | 6503.2123 | ≤320 | PASS |
| | Ant2 | 6465 | 76.575 | 6426.6349 | 6503.2099 | ≤320 | PASS |

Operating Frequency 6525-6875MHz:

| Test Mode | Antenna | Channel | OCB [MHz] | FL[MHz] | FH[MHz] | Limit [MHz] | Verdict |
|---|---|---|---|---|---|---|---|
| 11AX20MIMO | Ant1 | 6535 | 19.042 | 6525.3875 | 6544.4295 | ≤320 | PASS |
| | Ant2 | 6535 | 19.042 | 6525.3474 | 6544.3894 | ≤320 | PASS |
| | Ant1 | 6695 | 19.071 | 6685.4107 | 6704.4817 | ≤320 | PASS |
| | Ant2 | 6695 | 19.043 | 6685.4106 | 6704.4536 | ≤320 | PASS |
| | Ant1 | 6855 | 19.072 | 6845.3542 | 6864.4262 | ≤320 | PASS |
| | Ant2 | 6855 | 19.070 | 6845.3662 | 6864.4362 | ≤320 | PASS |
| 11AX40MIMO | Ant1 | 6565 | 37.381 | 6546.1939 | 6583.5749 | ≤320 | PASS |
| | Ant2 | 6565 | 37.284 | 6546.1159 | 6583.3999 | ≤320 | PASS |
| | Ant1 | 6685 | 37.616 | 6666.1426 | 6703.7586 | ≤320 | PASS |
| | Ant2 | 6685 | 37.620 | 6666.1178 | 6703.7378 | ≤320 | PASS |
| | Ant1 | 6845 | 37.455 | 6826.2336 | 6863.6886 | ≤320 | PASS |
| | Ant2 | 6845 | 37.242 | 6826.4353 | 6863.6773 | ≤320 | PASS |
| 11AX80MIMO | Ant1 | 6625 | 76.710 | 6586.5889 | 6663.2989 | ≤320 | PASS |
| | Ant2 | 6625 | 76.961 | 6586.4974 | 6663.4584 | ≤320 | PASS |
| | Ant1 | 6705 | 76.951 | 6666.4533 | 6743.4043 | ≤320 | PASS |
| | Ant2 | 6705 | 76.863 | 6666.4811 | 6743.3441 | ≤320 | PASS |
| | Ant1 | 6785 | 76.708 | 6746.6105 | 6823.3185 | ≤320 | PASS |
| | Ant2 | 6785 | 76.702 | 6746.4665 | 6823.1685 | ≤320 | PASS |

Operating Frequency 6875-7125MHz:

| Test Mode | Antenna | Channel | OCB [MHz] | FL[MHz] | FH[MHz] | Limit [MHz] | Verdict |
|---|---|---|---|---|---|---|---|
| 11AX20MIMO | Ant1 | 6895 | 19.048 | 6885.3804 | 6904.4284 | ≤320 | PASS |
| | Ant2 | 6895 | 19.010 | 6885.4188 | 6904.4288 | ≤320 | PASS |
| | Ant1 | 6995 | 19.028 | 6985.3439 | 7004.3719 | ≤320 | PASS |
| | Ant2 | 6995 | 19.037 | 6985.3815 | 7004.4185 | ≤320 | PASS |
| | Ant1 | 7115 | 19.080 | 7105.3393 | 7124.4193 | ≤320 | PASS |
| | Ant2 | 7115 | 19.015 | 7105.4274 | 7124.4424 | ≤320 | PASS |
| 11AX40MIMO | Ant1 | 6925 | 37.580 | 6906.1344 | 6943.7144 | ≤320 | PASS |
| | Ant2 | 6925 | 37.659 | 6906.1068 | 6943.7658 | ≤320 | PASS |
| | Ant1 | 6965 | 37.526 | 6946.0968 | 6983.6228 | ≤320 | PASS |

| | | | | | | | |
|---|---|---|---|---|---|---|---|
| | Ant2 | 6965 | 37.622 | 6946.1672 | 6983.7892 | ≤320 | PASS |
| | Ant1 | 7085 | 37.503 | 7066.1335 | 7103.6365 | ≤320 | PASS |
| | Ant2 | 7085 | 37.505 | 7066.1400 | 7103.6450 | ≤320 | PASS |
| 11AX80MIMO | Ant1 | 6945 | 76.788 | 6906.5478 | 6983.3358 | ≤320 | PASS |
| | Ant2 | 6945 | 76.829 | 6906.6592 | 6983.4882 | ≤320 | PASS |
| | Ant1 | 7025 | 76.774 | 6986.2813 | 7063.0553 | ≤320 | PASS |
| | Ant2 | 7025 | 76.552 | 6986.5793 | 7063.1313 | ≤320 | PASS |

Test Graphs see Appendix C.

## 7.4. Output Power Measurement

### 7.4.1. Test Limit

**For FCC Power Measurement Limit**

For client devices operating under the control of an indoor access point in the 5.925–7.125 GHz bands, the maximum power spectral density must not exceed −1 dBm e.i.r.p. in any 1-megahertz band, and the maximum e.i.r.p. over the frequency band of operation must not exceed 24 dBm.

### 7.4.2. Test Procedure Used

KDB 789033 D02v02r01 - Section E) 3) b) Method PM-G

ANSI C63.10-2013 – Section 12.3.3.2 Method PM-G

### 7.4.3. Test Setting

Average power measurements were perform only when the EUT was transmitting at its maximum power control level using a broadband power meter with a pulse sensor. The power meter implemented triggering and gating capabilities which were set up such that power measurements were recorded only during the ON time of the transmitter. The trace was averaged over 100 traces to obtain the final measured average power.

### 7.4.4. Test Setup

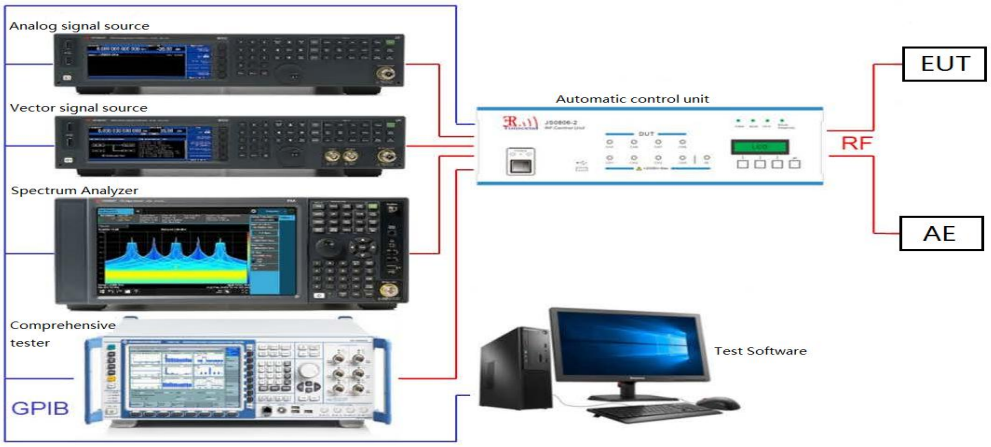

### 7.4.5. Test Result

Operating Frequency 5925-6425MHz:

| Test Mode | Antenna | Channel | Channel Powert [dBm] | Duty Cycle [%] | DC Factor [dBm] | Result [dBm] | Limit [dBm] | Gain [dBi] | EIRP [dBm] | EIRP Limit [dBm] | Verdict |
|---|---|---|---|---|---|---|---|---|---|---|---|
| 11AX20MIMO | Ant1 | 5955 | -0.37 | 100.00 | 0.00 | -0.37 | ≤20.10 | 3.90 | 3.53 | ≤24.00 | PASS |
| | Ant2 | 5955 | -0.28 | 100.00 | 0.00 | -0.28 | ≤20.10 | 3.90 | 3.62 | ≤24.00 | PASS |
| | total | 5955 | --- | --- | --- | 2.69 | ≤17.09 | 6.91 | 9.60 | ≤24.00 | PASS |
| | Ant1 | 6175 | -2.11 | 100.00 | 0.00 | -2.11 | ≤20.10 | 3.90 | 1.79 | ≤24.00 | PASS |
| | Ant2 | 6175 | -1.75 | 100.00 | 0.00 | -1.75 | ≤20.10 | 3.90 | 2.15 | ≤24.00 | PASS |
| | total | 6175 | --- | --- | --- | 1.08 | ≤17.09 | 6.91 | 7.99 | ≤24.00 | PASS |
| | Ant1 | 6415 | -1.03 | 100.00 | 0.00 | -1.03 | ≤20.10 | 3.90 | 2.87 | ≤24.00 | PASS |
| | Ant2 | 6415 | -1.29 | 100.00 | 0.00 | -1.29 | ≤20.10 | 3.90 | 2.61 | ≤24.00 | PASS |
| | total | 6415 | --- | --- | --- | 1.85 | ≤17.09 | 6.91 | 8.76 | ≤24.00 | PASS |
| 11AX40MIMO | Ant1 | 5965 | 0.27 | 100.00 | 0.00 | 0.27 | ≤20.10 | 3.90 | 4.17 | ≤24.00 | PASS |
| | Ant2 | 5965 | 2.49 | 100.00 | 0.00 | 2.49 | ≤20.10 | 3.90 | 6.39 | ≤24.00 | PASS |
| | total | 5965 | --- | --- | --- | 4.53 | ≤17.09 | 6.91 | 11.44 | ≤24.00 | PASS |
| | Ant1 | 6165 | -1.88 | 100.00 | 0.00 | -1.88 | ≤20.10 | 3.90 | 2.02 | ≤24.00 | PASS |
| | Ant2 | 6165 | -1.10 | 100.00 | 0.00 | -1.10 | ≤20.10 | 3.90 | 2.80 | ≤24.00 | PASS |
| | total | 6165 | --- | --- | --- | 1.54 | ≤17.09 | 6.91 | 8.45 | ≤24.00 | PASS |
| | Ant1 | 6405 | -0.13 | 100.00 | 0.00 | -0.13 | ≤20.10 | 3.90 | 3.77 | ≤24.00 | PASS |
| | Ant2 | 6405 | 0.15 | 100.00 | 0.00 | 0.15 | ≤20.10 | 3.90 | 4.05 | ≤24.00 | PASS |
| | total | 6405 | --- | --- | --- | 3.02 | ≤17.09 | 6.91 | 9.93 | ≤24.00 | PASS |
| 11AX80MIMO | Ant1 | 5985 | 1.15 | 100.00 | 0.00 | 1.15 | ≤20.10 | 3.90 | 5.05 | ≤24.00 | PASS |
| | Ant2 | 5985 | 2.42 | 100.00 | 0.00 | 2.42 | ≤20.10 | 3.90 | 6.32 | ≤24.00 | PASS |
| | total | 5985 | --- | --- | --- | 4.84 | ≤17.09 | 6.91 | 11.75 | ≤24.00 | PASS |
| | Ant1 | 6145 | 1.37 | 100.00 | 0.00 | 1.37 | ≤20.10 | 3.90 | 5.27 | ≤24.00 | PASS |
| | Ant2 | 6145 | 2.95 | 100.00 | 0.00 | 2.95 | ≤20.10 | 3.90 | 6.85 | ≤24.00 | PASS |
| | total | 6145 | --- | --- | --- | 5.24 | ≤17.09 | 6.91 | 12.15 | ≤24.00 | PASS |
| | Ant1 | 6385 | 2.61 | 100.00 | 0.00 | 2.61 | ≤20.10 | 3.90 | 6.51 | ≤24.00 | PASS |
| | Ant2 | 6385 | 1.14 | 100.00 | 0.00 | 1.14 | ≤20.10 | 3.90 | 5.04 | ≤24.00 | PASS |
| | total | 6385 | --- | --- | --- | 4.95 | ≤17.09 | 6.91 | 11.86 | ≤24.00 | PASS |

Operating Frequency 6425-6525MHz:

| Test Mode | Antenna | Channel | Channel Powert [dBm] | Duty Cycle [%] | DC Factor [dBm] | Result [dBm] | Limit [dBm] | Gain [dBi] | EIRP [dBm] | EIRP Limit [dBm] | Verdict |
|---|---|---|---|---|---|---|---|---|---|---|---|
| 11AX20MIMO | Ant1 | 6435 | -1.17 | 100.00 | 0.00 | -1.17 | ≤19.08 | 4.92 | 3.75 | ≤24.00 | PASS |
| | Ant2 | 6435 | -1.20 | 100.00 | 0.00 | -1.2 | ≤19.08 | 4.92 | 3.72 | ≤24.00 | PASS |
| | total | 6435 | --- | --- | --- | 1.83 | ≤16.06 | 7.94 | 9.77 | ≤24.00 | PASS |
| | Ant1 | 6475 | -1.15 | 100.00 | 0.00 | -1.15 | ≤19.08 | 4.92 | 3.77 | ≤24.00 | PASS |
| | Ant2 | 6475 | -0.90 | 100.00 | 0.00 | -0.9 | ≤19.08 | 4.92 | 4.02 | ≤24.00 | PASS |
| | total | 6475 | --- | --- | --- | 1.99 | ≤16.06 | 7.94 | 9.93 | ≤24.00 | PASS |
| | Ant1 | 6515 | -1.59 | 100.00 | 0.00 | -1.59 | ≤19.08 | 4.92 | 3.33 | ≤24.00 | PASS |
| | Ant2 | 6515 | -1.67 | 100.00 | 0.00 | -1.67 | ≤19.08 | 4.92 | 3.25 | ≤24.00 | PASS |
| | total | 6515 | --- | --- | --- | 1.38 | ≤16.06 | 7.94 | 9.32 | ≤24.00 | PASS |
| 11AX40MIMO | Ant1 | 6445 | -0.20 | 100.00 | 0.00 | -0.2 | ≤19.08 | 4.92 | 4.72 | ≤24.00 | PASS |
| | Ant2 | 6445 | -0.03 | 100.00 | 0.00 | -0.03 | ≤19.08 | 4.92 | 4.89 | ≤24.00 | PASS |
| | total | 6445 | --- | --- | --- | 2.9 | ≤16.06 | 7.94 | 10.84 | ≤24.00 | PASS |
| | Ant1 | 6485 | -0.12 | 100.00 | 0.00 | -0.12 | ≤19.08 | 4.92 | 4.8 | ≤24.00 | PASS |
| | Ant2 | 6485 | -0.53 | 100.00 | 0.00 | -0.53 | ≤19.08 | 4.92 | 4.39 | ≤24.00 | PASS |
| | total | 6485 | --- | --- | --- | 2.69 | ≤16.06 | 7.94 | 10.63 | ≤24.00 | PASS |
| 11AX80MIMO | Ant1 | 6465 | 1.65 | 100.00 | 0.00 | 1.65 | ≤19.08 | 4.92 | 6.57 | ≤24.00 | PASS |
| | Ant2 | 6465 | 1.46 | 100.00 | 0.00 | 1.46 | ≤19.08 | 4.92 | 6.38 | ≤24.00 | PASS |
| | total | 6465 | --- | --- | --- | 4.57 | ≤16.06 | 7.94 | 12.51 | ≤24.00 | PASS |

Operating Frequency 6525-6875MHz:

| Test Mode | Antenna | Channel | Channel Powert [dBm] | Duty Cycle [%] | DC Factor [dBm] | Result [dBm] | Limit [dBm] | Gain [dBi] | EIRP [dBm] | EIRP Limit [dBm] | Verdict |
|---|---|---|---|---|---|---|---|---|---|---|---|
| 11AX20MIMO | Ant1 | 6535 | -0.81 | 100.00 | 0.00 | -0.81 | ≤19.08 | 4.92 | 4.11 | ≤24.00 | PASS |
| | Ant2 | 6535 | -0.70 | 100.00 | 0.00 | -0.7 | ≤19.08 | 4.92 | 4.22 | ≤24.00 | PASS |
| | total | 6535 | --- | --- | --- | 2.26 | ≤16.06 | 7.94 | 10.2 | ≤24.00 | PASS |
| | Ant1 | 6695 | -1.40 | 100.00 | 0.00 | -1.4 | ≤19.08 | 4.92 | 3.52 | ≤24.00 | PASS |
| | Ant2 | 6695 | -2.34 | 100.00 | 0.00 | -2.34 | ≤19.08 | 4.92 | 2.58 | ≤24.00 | PASS |
| | total | 6695 | --- | --- | --- | 1.17 | ≤16.06 | 7.94 | 9.11 | ≤24.00 | PASS |
| | Ant1 | 6855 | -0.32 | 100.00 | 0.00 | -0.32 | ≤19.08 | 4.92 | 4.6 | ≤24.00 | PASS |
| | Ant2 | 6855 | -2.83 | 100.00 | 0.00 | -2.83 | ≤19.08 | 4.92 | 2.09 | ≤24.00 | PASS |
| | total | 6855 | --- | --- | --- | 1.61 | ≤16.06 | 7.94 | 9.55 | ≤24.00 | PASS |
| 11AX40MIMO | Ant1 | 6565 | -0.86 | 100.00 | 0.00 | -0.86 | ≤19.08 | 4.92 | 4.06 | ≤24.00 | PASS |
| | Ant2 | 6565 | 1.77 | 100.00 | 0.00 | 1.77 | ≤19.08 | 4.92 | 6.69 | ≤24.00 | PASS |
| | total | 6565 | --- | --- | --- | 3.66 | ≤16.06 | 7.94 | 11.6 | ≤24.00 | PASS |
| | Ant1 | 6685 | 0.65 | 100.00 | 0.00 | 0.65 | ≤19.08 | 4.92 | 5.57 | ≤24.00 | PASS |
| | Ant2 | 6685 | 0.63 | 100.00 | 0.00 | 0.63 | ≤19.08 | 4.92 | 5.55 | ≤24.00 | PASS |
| | total | 6685 | --- | --- | --- | 3.65 | ≤16.06 | 7.94 | 11.59 | ≤24.00 | PASS |
| | Ant1 | 6845 | -0.68 | 100.00 | 0.00 | -0.68 | ≤19.08 | 4.92 | 4.24 | ≤24.00 | PASS |
| | Ant2 | 6845 | -0.14 | 100.00 | 0.00 | -0.14 | ≤19.08 | 4.92 | 4.78 | ≤24.00 | PASS |
| | total | 6845 | --- | --- | --- | 2.61 | ≤16.06 | 7.94 | 10.55 | ≤24.00 | PASS |
| 11AX80MIMO | Ant1 | 6625 | 1.49 | 100.00 | 0.00 | 1.49 | ≤19.08 | 4.92 | 6.41 | ≤24.00 | PASS |
| | Ant2 | 6625 | 0.72 | 100.00 | 0.00 | 0.72 | ≤19.08 | 4.92 | 5.64 | ≤24.00 | PASS |
| | total | 6625 | --- | --- | --- | 4.13 | ≤16.06 | 7.94 | 12.07 | ≤24.00 | PASS |
| | Ant1 | 6705 | 0.92 | 100.00 | 0.00 | 0.92 | ≤19.08 | 4.92 | 5.84 | ≤24.00 | PASS |
| | Ant2 | 6705 | 1.40 | 100.00 | 0.00 | 1.4 | ≤19.08 | 4.92 | 6.32 | ≤24.00 | PASS |
| | total | 6705 | --- | --- | --- | 4.18 | ≤16.06 | 7.94 | 12.12 | ≤24.00 | PASS |
| | Ant1 | 6785 | 2.78 | 100.00 | 0.00 | 2.78 | ≤19.08 | 4.92 | 7.7 | ≤24.00 | PASS |
| | Ant2 | 6785 | 2.67 | 100.00 | 0.00 | 2.67 | ≤19.08 | 4.92 | 7.59 | ≤24.00 | PASS |
| | total | 6785 | --- | --- | --- | 5.74 | ≤16.06 | 7.94 | 13.68 | ≤24.00 | PASS |

Operating Frequency 6875-7125MHz:

| Test Mode | Antenna | Channel | Channel Powert [dBm] | Duty Cycle [%] | DC Factor [dBm] | Result [dBm] | Limit [dBm] | Gain [dBi] | EIRP [dBm] | EIRP Limit [dBm] | Verdict |
|---|---|---|---|---|---|---|---|---|---|---|---|
| 11AX20MIMO | Ant1 | 6895 | -1.49 | 100.00 | 0.00 | -1.49 | ≤19.08 | 4.92 | 3.43 | ≤24.00 | PASS |
| | Ant2 | 6895 | -2.51 | 100.00 | 0.00 | -2.51 | ≤19.08 | 4.92 | 2.41 | ≤24.00 | PASS |
| | total | 6895 | --- | --- | --- | 1.04 | ≤16.06 | 7.94 | 8.98 | ≤24.00 | PASS |
| | Ant1 | 6995 | -1.14 | 100.00 | 0.00 | -1.14 | ≤19.08 | 4.92 | 3.78 | ≤24.00 | PASS |
| | Ant2 | 6995 | -1.86 | 100.00 | 0.00 | -1.86 | ≤19.08 | 4.92 | 3.06 | ≤24.00 | PASS |
| | total | 6995 | --- | --- | --- | 1.53 | ≤16.06 | 7.94 | 9.47 | ≤24.00 | PASS |
| | Ant1 | 7115 | -3.39 | 100.00 | 0.00 | -3.39 | ≤19.08 | 4.92 | 1.53 | ≤24.00 | PASS |
| | Ant2 | 7115 | -0.59 | 100.00 | 0.00 | -0.59 | ≤19.08 | 4.92 | 4.33 | ≤24.00 | PASS |
| | total | 7115 | --- | --- | --- | 1.24 | ≤16.06 | 7.94 | 9.18 | ≤24.00 | PASS |
| 11AX40MIMO | Ant1 | 6925 | 0.57 | 100.00 | 0.00 | 0.57 | ≤19.08 | 4.92 | 5.49 | ≤24.00 | PASS |
| | Ant2 | 6925 | -0.26 | 100.00 | 0.00 | -0.26 | ≤19.08 | 4.92 | 4.66 | ≤24.00 | PASS |
| | total | 6925 | --- | --- | --- | 3.19 | ≤16.06 | 7.94 | 11.13 | ≤24.00 | PASS |
| | Ant1 | 6965 | 1.49 | 100.00 | 0.00 | 1.49 | ≤19.08 | 4.92 | 6.41 | ≤24.00 | PASS |
| | Ant2 | 6965 | -0.06 | 100.00 | 0.00 | -0.06 | ≤19.08 | 4.92 | 4.86 | ≤24.00 | PASS |
| | total | 6965 | --- | --- | --- | 3.79 | ≤16.06 | 7.94 | 11.73 | ≤24.00 | PASS |
| | Ant1 | 7085 | -1.59 | 100.00 | 0.00 | -1.59 | ≤19.08 | 4.92 | 3.33 | ≤24.00 | PASS |
| | Ant2 | 7085 | 1.19 | 100.00 | 0.00 | 1.19 | ≤19.08 | 4.92 | 6.11 | ≤24.00 | PASS |
| | total | 7085 | --- | --- | --- | 3.03 | ≤16.06 | 7.94 | 10.97 | ≤24.00 | PASS |
| 11AX80MIMO | Ant1 | 6945 | 2.49 | 100.00 | 0.00 | 2.49 | ≤19.08 | 4.92 | 7.41 | ≤24.00 | PASS |
| | Ant2 | 6945 | 1.00 | 100.00 | 0.00 | 1 | ≤19.08 | 4.92 | 5.92 | ≤24.00 | PASS |
| | total | 6945 | --- | --- | --- | 4.82 | ≤16.06 | 7.94 | 12.76 | ≤24.00 | PASS |
| | Ant1 | 7025 | 0.13 | 100.00 | 0.00 | 0.13 | ≤19.08 | 4.92 | 5.05 | ≤24.00 | PASS |
| | Ant2 | 7025 | 1.39 | 100.00 | 0.00 | 1.39 | ≤19.08 | 4.92 | 6.31 | ≤24.00 | PASS |
| | total | 7025 | --- | --- | --- | 3.82 | ≤16.06 | 7.94 | 11.76 | ≤24.00 | PASS |

## 7.5. Power Spectral Density Measurement

### 7.5.1. Test Limit

For client devices operating under the control of an indoor access point in the 5.925–7.125 GHz bands, the maximum power spectral density must not exceed −1 dBm e.i.r.p. in any 1-megahertz band, and the maximum e.i.r.p. over the frequency band of operation must not exceed 24 dBm.

### 7.5.2. Test Procedure Used

KDB 789033 D02v02r01 - Section F

ANSI C63.10-2013 - Section 12.3.2.2

### 7.5.3. Test Setting

1. Analyzer was set to the center frequency of the UNII channel under investigation
2. Span was set to encompass the entire 26dB EBW of the signal.
3. RBW = 1MHz
4. VBW = 3MHz
5. Number of sweep points ≥ 2 × (span / RBW)
6. Detector = power averaging (Average)
7. Sweep time = auto
8. Trigger = free run
9. Use the peak search function on the instrument to find the peak of the spectrum and record its value.
10. Add 10*log(1/x), where x is the duty cycle, to the measured power in order to compute the average power during the actual transmission times (because the measurement represents an average over both the on and off times of the transmission). For example, add 10*log(1/0.25) = 6 dB if the duty cycle is 25 percent.

### 7.5.4. Test Setup

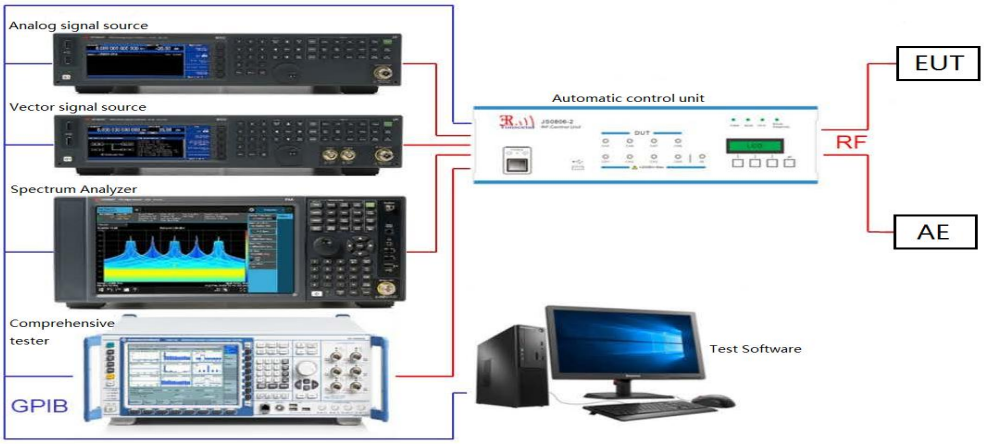


### 7.5.5. Test Result

Operating Frequency 5925-6425MHz:

| Test Mode | Antenna | Channel | Result [dBm/MHz] | Limit [dBm/MHz] | Gain [dBi] | EIRP [dBm/MHz] | Limit [dBm/MHz] | Verdict |
|---|---|---|---|---|---|---|---|---|
| 11AX20MIMO | Ant1 | 5955 | -11.49 | ≤-4.90 | 3.90 | -7.59 | ≤-1.00 | PASS |
| | Ant2 | 5955 | -10.47 | ≤-4.90 | 3.90 | -6.57 | ≤-1.00 | PASS |
| | total | 5955 | -7.94 | ≤-7.91 | 6.91 | -1.03 | ≤-1.00 | PASS |
| | Ant1 | 6175 | -13.21 | ≤-4.90 | 3.90 | -9.31 | ≤-1.00 | PASS |
| | Ant2 | 6175 | -11.7 | ≤-4.90 | 3.90 | -7.80 | ≤-1.00 | PASS |
| | total | 6175 | -9.38 | ≤-7.91 | 6.91 | -2.47 | ≤-1.00 | PASS |
| | Ant1 | 6415 | -12.06 | ≤-4.90 | 3.90 | -8.16 | ≤-1.00 | PASS |
| | Ant2 | 6415 | -11.56 | ≤-4.90 | 3.90 | -7.66 | ≤-1.00 | PASS |
| | total | 6415 | -8.79 | ≤-7.91 | 6.91 | -1.88 | ≤-1.00 | PASS |
| 11AX40MIMO | Ant1 | 5965 | -13.2 | ≤-4.90 | 3.90 | -9.30 | ≤-1.00 | PASS |
| | Ant2 | 5965 | -9.74 | ≤-4.90 | 3.90 | -5.84 | ≤-1.00 | PASS |
| | total | 5965 | -8.12 | ≤-7.91 | 6.91 | -1.21 | ≤-1.00 | PASS |
| | Ant1 | 6165 | -14.73 | ≤-4.90 | 3.90 | -10.83 | ≤-1.00 | PASS |
| | Ant2 | 6165 | -12.22 | ≤-4.90 | 3.90 | -8.32 | ≤-1.00 | PASS |
| | total | 6165 | -10.29 | ≤-7.91 | 6.91 | -3.38 | ≤-1.00 | PASS |
| | Ant1 | 6405 | -13.34 | ≤-4.90 | 3.90 | -9.44 | ≤-1.00 | PASS |
| | Ant2 | 6405 | -11.42 | ≤-4.90 | 3.90 | -7.52 | ≤-1.00 | PASS |
| | total | 6405 | -9.26 | ≤-7.91 | 6.91 | -2.35 | ≤-1.00 | PASS |
| 11AX80MIMO | Ant1 | 5985 | -14.54 | ≤-4.90 | 3.90 | -10.64 | ≤-1.00 | PASS |

| | | | | | | | | |
|---|---|---|---|---|---|---|---|---|
| | Ant2 | 5985 | -9.36 | ≤-4.90 | 3.90 | -5.46 | ≤-1.00 | PASS |
| | total | 5985 | -8.21 | ≤-7.91 | 6.91 | -1.30 | ≤-1.00 | PASS |
| | Ant1 | 6145 | -15.97 | ≤-4.90 | 3.90 | -12.07 | ≤-1.00 | PASS |
| | Ant2 | 6145 | -9.46 | ≤-4.90 | 3.90 | -5.56 | ≤-1.00 | PASS |
| | total | 6145 | -8.58 | ≤-7.91 | 6.91 | -1.67 | ≤-1.00 | PASS |
| | Ant1 | 6385 | -13.95 | ≤-4.90 | 3.90 | -10.05 | ≤-1.00 | PASS |
| | Ant2 | 6385 | -11.41 | ≤-4.90 | 3.90 | -7.51 | ≤-1.00 | PASS |
| | total | 6385 | -9.49 | ≤-7.91 | 6.91 | -2.58 | ≤-1.00 | PASS |

Operating Frequency 6425-6525MHz:

| Test Mode | Antenna | Channel | Result [dBm/MHz] | Limit [dBm/MHz] | Gain [dBi] | EIRP [dBm/MHz] | Limit [dBm/MHz] | Verdict |
|---|---|---|---|---|---|---|---|---|
| 11AX20MIMO | Ant1 | 6435 | -12.30 | ≤-5.92 | 4.92 | -7.16 | ≤-1.00 | PASS |
| | Ant2 | 6435 | -12.84 | ≤-5.92 | 4.92 | -6.58 | ≤-1.00 | PASS |
| | total | 6435 | -9.55 | ≤-8.94 | 7.94 | -1.61 | ≤-1.00 | PASS |
| | Ant1 | 6475 | -12.92 | ≤-5.92 | 4.92 | -7.02 | ≤-1.00 | PASS |
| | Ant2 | 6475 | -11.31 | ≤-5.92 | 4.92 | -6.44 | ≤-1.00 | PASS |
| | total | 6475 | -9.03 | ≤-8.94 | 7.94 | -1.09 | ≤-1.00 | PASS |
| | Ant1 | 6515 | -13.67 | ≤-5.92 | 4.92 | -7.41 | ≤-1.00 | PASS |
| | Ant2 | 6515 | -14.63 | ≤-5.92 | 4.92 | -6.44 | ≤-1.00 | PASS |
| | total | 6515 | -11.11 | ≤-8.94 | 7.94 | -3.17 | ≤-1.00 | PASS |
| 11AX40MIMO | Ant1 | 6445 | -13.13 | ≤-5.92 | 4.92 | -8.21 | ≤-1.00 | PASS |
| | Ant2 | 6445 | -12.08 | ≤-5.92 | 4.92 | -7.16 | ≤-1.00 | PASS |
| | total | 6445 | -9.56 | ≤-8.94 | 7.94 | -1.62 | ≤-1.00 | PASS |
| | Ant1 | 6485 | -13.19 | ≤-5.92 | 4.92 | -8.27 | ≤-1.00 | PASS |
| | Ant2 | 6485 | -12.77 | ≤-5.92 | 4.92 | -7.85 | ≤-1.00 | PASS |
| | total | 6485 | -9.96 | ≤-8.94 | 7.94 | -2.02 | ≤-1.00 | PASS |
| 11AX80MIMO | Ant1 | 6465 | -14.2 | ≤-5.92 | 4.92 | -9.28 | ≤-1.00 | PASS |
| | Ant2 | 6465 | -11.72 | ≤-5.92 | 4.92 | -6.8 | ≤-1.00 | PASS |
| | total | 6465 | -9.78 | ≤-8.94 | 7.94 | -1.84 | ≤-1.00 | PASS |

Operating Frequency 6525-6875MHz:

| Test Mode | Antenna | Channel | Result [dBm/MHz] | Limit [dBm/MHz] | Gain [dBi] | EIRP [dBm/MHz] | Limit [dBm/MHz] | Verdict |
|---|---|---|---|---|---|---|---|---|
| 11AX20MIMO | Ant1 | 6535 | -13.03 | ≤-5.92 | 4.92 | -7.17 | ≤-1.00 | PASS |
| | Ant2 | 6535 | -12.23 | ≤-5.92 | 4.92 | -6.4 | ≤-1.00 | PASS |
| | total | 6535 | -9.6 | ≤-8.94 | 7.94 | -1.66 | ≤-1.00 | PASS |

| | | | | | | | | |
|---|---|---|---|---|---|---|---|---|
| | Ant1 | 6695 | -12.49 | ≤-5.92 | 4.92 | -7.57 | ≤-1.00 | PASS |
| | Ant2 | 6695 | -12.41 | ≤-5.92 | 4.92 | -7.49 | ≤-1.00 | PASS |
| | total | 6695 | -9.44 | ≤-8.94 | 7.94 | -1.5 | ≤-1.00 | PASS |
| | Ant1 | 6855 | -11.35 | ≤-5.92 | 4.92 | -6.43 | ≤-1.00 | PASS |
| | Ant2 | 6855 | -13.07 | ≤-5.92 | 4.92 | -8.15 | ≤-1.00 | PASS |
| | total | 6855 | -9.12 | ≤-8.94 | 7.94 | -1.18 | ≤-1.00 | PASS |
| 11AX40MIMO | Ant1 | 6565 | -13.08 | ≤-5.92 | 4.92 | -8.87 | ≤-1.00 | PASS |
| | Ant2 | 6565 | -13.62 | ≤-5.92 | 4.92 | -5.19 | ≤-1.00 | PASS |
| | total | 6565 | -10.33 | ≤-8.94 | 7.94 | -2.39 | ≤-1.00 | PASS |
| | Ant1 | 6685 | -16.80 | ≤-5.92 | 4.92 | -7.72 | ≤-1.00 | PASS |
| | Ant2 | 6685 | -16.06 | ≤-5.92 | 4.92 | -5.83 | ≤-1.00 | PASS |
| | total | 6685 | -13.40 | ≤-8.94 | 7.94 | -5.46 | ≤-1.00 | PASS |
| | Ant1 | 6845 | -13.76 | ≤-5.92 | 4.92 | -8.84 | ≤-1.00 | PASS |
| | Ant2 | 6845 | -11.32 | ≤-5.92 | 4.92 | -6.4 | ≤-1.00 | PASS |
| | total | 6845 | -9.36 | ≤-8.94 | 7.94 | -1.42 | ≤-1.00 | PASS |
| 11AX80MIMO | Ant1 | 6625 | -14.77 | ≤-5.92 | 4.92 | -9.85 | ≤-1.00 | PASS |
| | Ant2 | 6625 | -11.23 | ≤-5.92 | 4.92 | -6.31 | ≤-1.00 | PASS |
| | total | 6625 | -9.64 | ≤-8.94 | 7.94 | -1.7 | ≤-1.00 | PASS |
| | Ant1 | 6705 | -15.15 | ≤-5.92 | 4.92 | -10.23 | ≤-1.00 | PASS |
| | Ant2 | 6705 | -11.05 | ≤-5.92 | 4.92 | -6.13 | ≤-1.00 | PASS |
| | total | 6705 | -9.62 | ≤-8.94 | 7.94 | -1.68 | ≤-1.00 | PASS |
| | Ant1 | 6785 | -13.88 | ≤-5.92 | 4.92 | -8.96 | ≤-1.00 | PASS |
| | Ant2 | 6785 | -11.44 | ≤-5.92 | 4.92 | -6.52 | ≤-1.00 | PASS |
| | total | 6785 | -9.48 | ≤-8.94 | 7.94 | -1.54 | ≤-1.00 | PASS |

Operating Frequency 6875-7125MHz:

| Test Mode | Antenna | Channel | Result [dBm/MHz] | Limit [dBm/MHz] | Gain [dBi] | EIRP [dBm/MHz] | Limit [dBm/MHz] | Verdict |
|---|---|---|---|---|---|---|---|---|
| 11AX20MIMO | Ant1 | 6895 | -12.79 | ≤-5.92 | 4.92 | -7.87 | ≤-1.00 | PASS |
| | Ant2 | 6895 | -12.42 | ≤-5.92 | 4.92 | -7.5 | ≤-1.00 | PASS |
| | total | 6895 | -9.59 | ≤-8.94 | 7.94 | -1.65 | ≤-1.00 | PASS |
| | Ant1 | 6995 | -12.37 | ≤-5.92 | 4.92 | -7.45 | ≤-1.00 | PASS |
| | Ant2 | 6995 | -12.21 | ≤-5.92 | 4.92 | -7.29 | ≤-1.00 | PASS |
| | total | 6995 | -9.28 | ≤-8.94 | 7.94 | -1.34 | ≤-1.00 | PASS |
| | Ant1 | 7115 | -14.97 | ≤-5.92 | 4.92 | -10.05 | ≤-1.00 | PASS |
| | Ant2 | 7115 | -10.67 | ≤-5.92 | 4.92 | -5.75 | ≤-1.00 | PASS |
| | total | 7115 | -9.3 | ≤-8.94 | 7.94 | -1.36 | ≤-1.00 | PASS |

| | | | | | | | | |
|---|---|---|---|---|---|---|---|---|
| 11AX40MIMO | Ant1 | 6925 | -15.21 | ≤-5.92 | 4.92 | -7.92 | ≤-1.00 | PASS |
| | Ant2 | 6925 | -12.93 | ≤-5.92 | 4.92 | -6.08 | ≤-1.00 | PASS |
| | total | 6925 | -10.91 | ≤-8.94 | 7.94 | -2.97 | ≤-1.00 | PASS |
| | Ant1 | 6965 | -13.63 | ≤-5.92 | 4.92 | -6.9 | ≤-1.00 | PASS |
| | Ant2 | 6965 | -11.74 | ≤-5.92 | 4.92 | -6.6 | ≤-1.00 | PASS |
| | total | 6965 | -9.57 | ≤-8.94 | 7.94 | -1.63 | ≤-1.00 | PASS |
| | Ant1 | 7085 | -14.91 | ≤-5.92 | 4.92 | -9.99 | ≤-1.00 | PASS |
| | Ant2 | 7085 | -10.89 | ≤-5.92 | 4.92 | -5.97 | ≤-1.00 | PASS |
| | total | 7085 | -9.44 | ≤-8.94 | 7.94 | -1.5 | ≤-1.00 | PASS |
| 11AX80MIMO | Ant1 | 6945 | -15.86 | ≤-5.92 | 4.92 | -8.45 | ≤-1.00 | PASS |
| | Ant2 | 6945 | -12.77 | ≤-5.92 | 4.92 | -5.64 | ≤-1.00 | PASS |
| | total | 6945 | -11.04 | ≤-8.94 | 7.94 | -3.10 | ≤-1.00 | PASS |
| | Ant1 | 7025 | -16.38 | ≤-5.92 | 4.92 | -11.46 | ≤-1.00 | PASS |
| | Ant2 | 7025 | -10.55 | ≤-5.92 | 4.92 | -5.63 | ≤-1.00 | PASS |
| | total | 7025 | -9.54 | ≤-8.94 | 7.94 | -1.6 | ≤-1.00 | PASS |

Test Graphs see Appendix C.

The Duty Cycle Factor is compensated in the Offset of graph.

## 7.6. In-Band Emissions (Mask)

### 7.6.1. Test Limit

15.407 b (7) For transmitters operating within the 5.925–7.125 GHz bands: Power spectral density must be suppressed by 20 dB at 1 MHz outside of channel edge, by 28 dB at one channel bandwidth from the channel center, and by 40 dB at one- and one-half times the channel bandwidth away from channel center. At frequencies between one megahertz outside an unlicensed device's channel edge and one channel bandwidth from the center of the channel, the limits must be linearly interpolated between 20 dB and 28 dB suppression, and at frequencies between one and one- and one-half times an unlicensed device's channel bandwidth, the limits must be linearly interpolated between 28 dB and 40 dB suppression. Emissions removed from the channel center by more than one- and one-half times the channel bandwidth must be suppressed by at least 40 dB.

### 7.6.2. Test Procedure Used

KDB 987594 U-NII 6 GHz EMC Measurement v01v01

### 7.6.3. Test Setting

KDB 987594 Section J) In-Band Emissions (Mask Figure 5)

1. Connect output of the antenna port to a spectrum analyzer or EMI receiver, with appropriate attenuation, as to not damage the instrumentation.
2. Set the reference level of the measuring equipment in accordance with procedure 4.1.5.2 of ANSI C63.10-2013.
3. Measure the 26 dB EBW using the test procedure 12.4.1 of ANSI C63.10-2013. (This will be used to determine the channel edge.)
4. Measure the power spectral density (which will be used for emissions mask reference) using the following procedure:
   a) Set the span to encompass the entire 26 dB EBW of the signal.
   b) Set RBW = same RBW used for 26 dB EBW measurement.
   c) Set VBW ≥ 3 X RBW
   d) Number of points in sweep ≥ [2 X span / RBW].
   e) Sweep time = auto.
   f) Detector = RMS (i.e., power averaging)
   g) Trace average at least 100 traces in power averaging (rms) mode.
   h) Use the peak search function on the instrument to find the peak of the spectrum.
5. For the purposes of developing the emission mask, the channel bandwidth is defined as the 26 dB EBW.
6. Using the measuring equipment limit line function, develop the emissions mask based on the following requirements. The emissions power spectral density must be reduced below the peak power spectral density (in dB) as follows:

a. Suppressed by 20 dB at 1 MHz outside of the channel edge. (The channel edge is defined as the 26-dB point on either side of the carrier center frequency.)

b. Suppressed by 28 dB at one channel bandwidth from the channel center.

c. Suppressed by 40 dB at one- and one-half times the channel bandwidth from the channel center.

7. Adjust the span to encompass the entire mask as necessary.
8. Clear trace.
9. Trace average at least 100 traces in power averaging (rms) mode.
10. Adjust the reference level as necessary so that the crest of the channel touches the top of the emission mask.

### 7.6.4. Test Setup

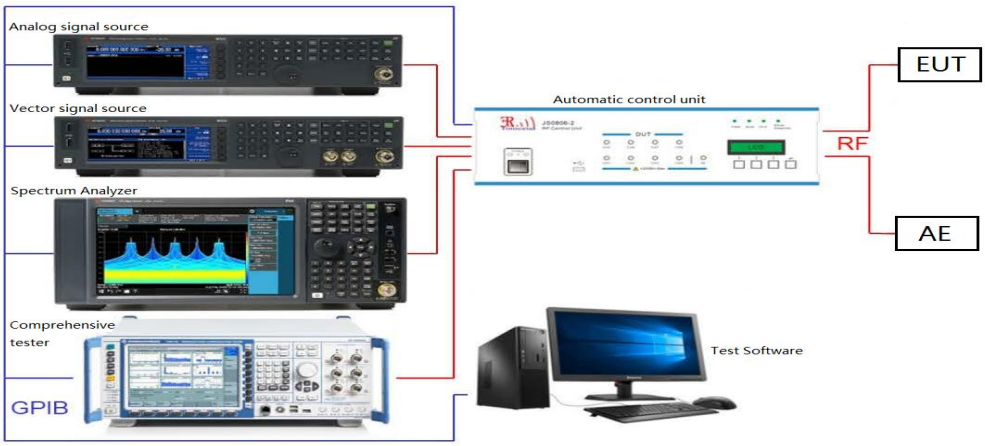


### 7.6.5. Test Result

Operating Frequency 5925-6425MHz:

| Test Mode | Antenna | Channel | Result | Limit | Verdict |
|---|---|---|---|---|---|
| 11AX20MIMO | Ant1 | 5955 | See test graph | See test graph | PASS |
| | Ant2 | 5955 | See test graph | See test graph | PASS |
| | Ant1 | 6175 | See test graph | See test graph | PASS |
| | Ant2 | 6175 | See test graph | See test graph | PASS |
| | Ant1 | 6415 | See test graph | See test graph | PASS |

| | | | | | |
|---|---|---|---|---|---|
| | Ant2 | 6415 | See test graph | See test graph | PASS |
| 11AX40MIMO | Ant1 | 5965 | See test graph | See test graph | PASS |
| | Ant2 | 5965 | See test graph | See test graph | PASS |
| | Ant1 | 6165 | See test graph | See test graph | PASS |
| | Ant2 | 6165 | See test graph | See test graph | PASS |
| | Ant1 | 6405 | See test graph | See test graph | PASS |
| | Ant2 | 6405 | See test graph | See test graph | PASS |
| 11AX80MIMO | Ant1 | 5985 | See test graph | See test graph | PASS |
| | Ant2 | 5985 | See test graph | See test graph | PASS |
| | Ant1 | 6145 | See test graph | See test graph | PASS |
| | Ant2 | 6145 | See test graph | See test graph | PASS |
| | Ant1 | 6385 | See test graph | See test graph | PASS |
| | Ant2 | 6385 | See test graph | See test graph | PASS |

Operating Frequency 6425-6525MHz:

| Test Mode | Antenna | Channel | Result | Limit | Verdict |
|---|---|---|---|---|---|
| 11AX20MIMO | Ant1 | 6435 | See test graph | See test graph | PASS |
| | Ant2 | 6435 | See test graph | See test graph | PASS |
| | Ant1 | 6475 | See test graph | See test graph | PASS |
| | Ant2 | 6475 | See test graph | See test graph | PASS |

| | | | | | |
|---|---|---|---|---|---|
| | Ant1 | 6515 | See test graph | See test graph | PASS |
| | Ant2 | 6515 | See test graph | See test graph | PASS |
| 11AX40MIMO | Ant1 | 6445 | See test graph | See test graph | PASS |
| | Ant2 | 6445 | See test graph | See test graph | PASS |
| | Ant1 | 6485 | See test graph | See test graph | PASS |
| | Ant2 | 6485 | See test graph | See test graph | PASS |
| 11AX80MIMO | Ant1 | 6465 | See test graph | See test graph | PASS |
| | Ant2 | 6465 | See test graph | See test graph | PASS |

Operating Frequency 6525-6875MHz:

| Test Mode | Antenna | Channel | Result | Limit | Verdict |
|---|---|---|---|---|---|
| 11AX20MIMO | Ant1 | 6535 | See test graph | See test graph | PASS |
| | Ant2 | 6535 | See test graph | See test graph | PASS |
| | Ant1 | 6695 | See test graph | See test graph | PASS |
| | Ant2 | 6695 | See test graph | See test graph | PASS |
| | Ant1 | 6855 | See test graph | See test graph | PASS |
| | Ant2 | 6855 | See test graph | See test graph | PASS |
| 11AX40MIMO | Ant1 | 6565 | See test graph | See test graph | PASS |
| | Ant2 | 6565 | See test graph | See test graph | PASS |
| | Ant1 | 6685 | See test graph | See test graph | PASS |

| | | | | | |
|---|---|---|---|---|---|
| | Ant2 | 6685 | See test graph | See test graph | PASS |
| | Ant1 | 6845 | See test graph | See test graph | PASS |
| | Ant2 | 6845 | See test graph | See test graph | PASS |
| 11AX80MIMO | Ant1 | 6625 | See test graph | See test graph | PASS |
| | Ant2 | 6625 | See test graph | See test graph | PASS |
| | Ant1 | 6705 | See test graph | See test graph | PASS |
| | Ant2 | 6705 | See test graph | See test graph | PASS |
| | Ant1 | 6785 | See test graph | See test graph | PASS |
| | Ant2 | 6785 | See test graph | See test graph | PASS |

Operating Frequency 6875-7125MHz:

| Test Mode | Antenna | Channel | Result | Limit | Verdict |
|---|---|---|---|---|---|
| 11AX20MIMO | Ant1 | 6895 | See test graph | See test graph | PASS |
| | Ant2 | 6895 | See test graph | See test graph | PASS |
| | Ant1 | 6995 | See test graph | See test graph | PASS |
| | Ant2 | 6995 | See test graph | See test graph | PASS |
| | Ant1 | 7115 | See test graph | See test graph | PASS |
| | Ant2 | 7115 | See test graph | See test graph | PASS |
| 11AX40MIMO | Ant1 | 6925 | See test graph | See test graph | PASS |
| | Ant2 | 6925 | See test graph | See test graph | PASS |

| | | | | | |
|---|---|---|---|---|---|
| | Ant1 | 6965 | See test graph | See test graph | PASS |
| | Ant2 | 6965 | See test graph | See test graph | PASS |
| | Ant1 | 7085 | See test graph | See test graph | PASS |
| | Ant2 | 7085 | See test graph | See test graph | PASS |
| 11AX80MIMO | Ant1 | 6945 | See test graph | See test graph | PASS |
| | Ant2 | 6945 | See test graph | See test graph | PASS |
| | Ant1 | 7025 | See test graph | See test graph | PASS |
| | Ant2 | 7025 | See test graph | See test graph | PASS |

## 7.7. Contention Based Protocol

### 7.7.1. Test Limit

15.407 d (6) Indoor access points, subordinate devices and client devices operating in the 5.925–7.125 GHz band must employ a contention-based protocol.

FCC KDB 987594 D02 U-NII 6 GHz EMC Measurement v01v01

Unlicensed low-power indoor devices must detect co-channel radio frequency power that is at least -62 dBm or lower. Upon detection of energy in the band, unlicensed low power indoor devices must vacate the channel (in which incumbent signal is transmitted) and stay off the incumbent channel as long as detected radio frequency power is equal to or greater than the threshold (-62 dBm)1. The -62 dBm (or lower) threshold is referenced to a 0 dBi antenna gain. To ensure incumbent operations are reliably detected in the band, low power indoor devices must detect RF energy throughout their intended operating channel. For example, an 802.11 device that plans to transmit a 40 MHz- wide signal (on a primary 20 MHz channel and a secondary 20 MHz channel) must detect energy throughout the entire 40 MHz channel. Additionally, low-power indoor devices must detect co-channel energy with 90% or greater certainty.

**Table 1. Criteria to determine number of times detection threshold test may be performed**

| If | Number of Tests | Placement of Incumbent Transmission |
|---|---|---|
| $BW_{EUT} \leq BW_{Inc}$ | Once | Tune incumbent and EUT transmissions ($f_{c1} = f_{c2}$) |
| $BW_{Inc} < BW_{EUT} \leq 2BW_{Inc}$ | Once | Incumbent transmission is contained within $BW_{EUT}$ |
| $2BW_{Inc} < BW_{EUT} \leq 4BW_{Inc}$ | Twice. Incumbent transmission is contained within $BW_{EUT}$ | Incumbent transmission is located as closely as possible to the lower edge and upper edge, respectively, of the EUT channel |
| $BW_{EUT} > 4BW_{Inc}$ | Three times | Incumbent transmission is located as closely as possible to the lower edge of the EUT channel, in the middle of EUT channel, and as closely as possible to the upper edge of the EUT channel |

where:

$BW_{EUT}$: Transmission bandwidth of EUT signal
$BW_{Inc}$: Transmission bandwidth of the simulated incumbent signal (10 MHz wide AWGN signal)
$f_{c1}$: Center frequency of EUT transmission
$f_{c2}$: Center frequency of simulated incumbent signal

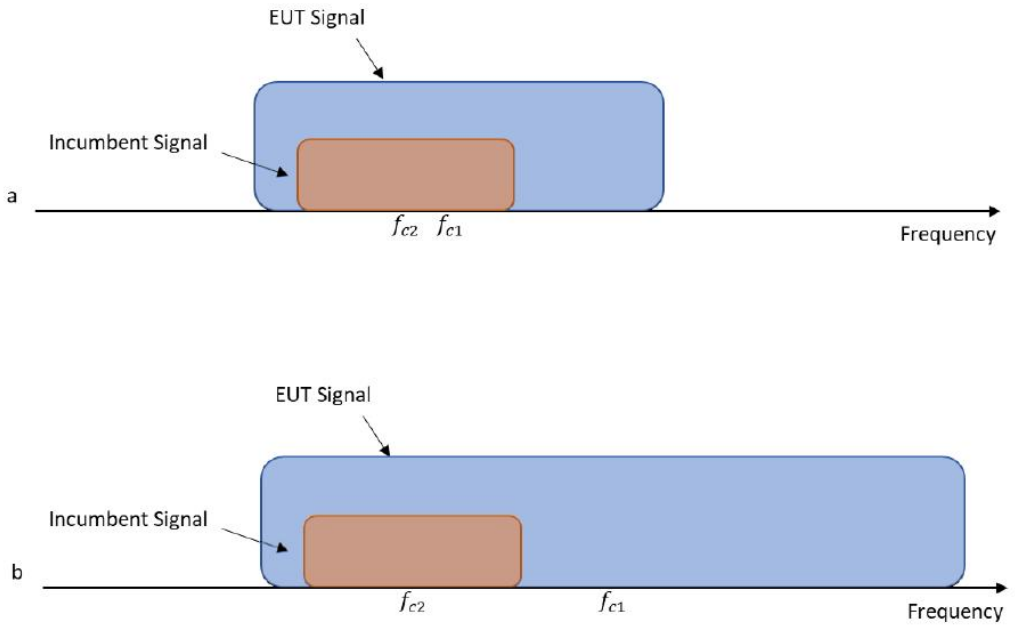


**Figure 1. Two possible scenarios where a) center frequency of EUT transmission falls within incumbent's bandwidth, or b) outside of it**

### 7.7.2. Test Procedure Used

KDB 987594 U-NII 6 GHz EMC Measurement v01v01

### 7.7.3. Test Setting

KDB 987594 Section I) Contention Based Protocol

1. Configure the EUT to transmit with a constant duty cycle.
2. Set the operating parameters of the EUT including power level, operating frequency, modulation and bandwidth.
3. Set the signal analyzer center frequency to the nominal EEUT channel center frequency. The span range of the signal analyzer shall be between two times and five times the OBW of the EUT. Connect the output port of the EUT to the signal analyzer 2, as shown in Figure 2. Ensure that the attenuator 2 provides enough attenuation to not overload the signal analyzer 2 receiver.
4. Monitoring the signal analyzer 2, verify the EUT is operating and transmitting with the parameters set at step two.
5. Using an AWGN signal source, generate (but do not transmit, i.e., RF OFF) a 10 MHz-wide AWGN signal. Use Table 1 to determine the center frequency of the 10 MHz AWGN signal relative to the EUT's channel bandwidth and center frequency.

6. Set the AWGN signal power to an extremely low level (more than 20 dB below the -62 dBm threshold). Connect the AWGN signal source, via a 3-dB splitter, to the signal analyzer 1 and the EUT as shown in Figure 2.

7. Transmit the AWGN signal (RF ON) and verify its characteristics on the signal analyzer 1.
8. Monitor the signal analyzer 2 to verify if the AWGN signal has been detected and the EUT has ceased transmission. If the EUT continues to transmit, then incrementally increase the AWGN signal power level until the EUT stops transmitting.
9. (Including all losses in the RF paths) Determine and record the AWGN signal power level (at the EUT's antenna port) at which the EUT ceased transmission. Repeat the procedure at least 10 times to verify the EUT can detect an AWGN signal with 90% (or better) level of certainty.
10. Refer to Table 1 to determine number of times the detection threshold testing needs to be repeated. If testing is required more than once, then go back to step 5, choose a different center frequency for the AWGN signal and repeat the process.

### 7.7.4. Test Setup

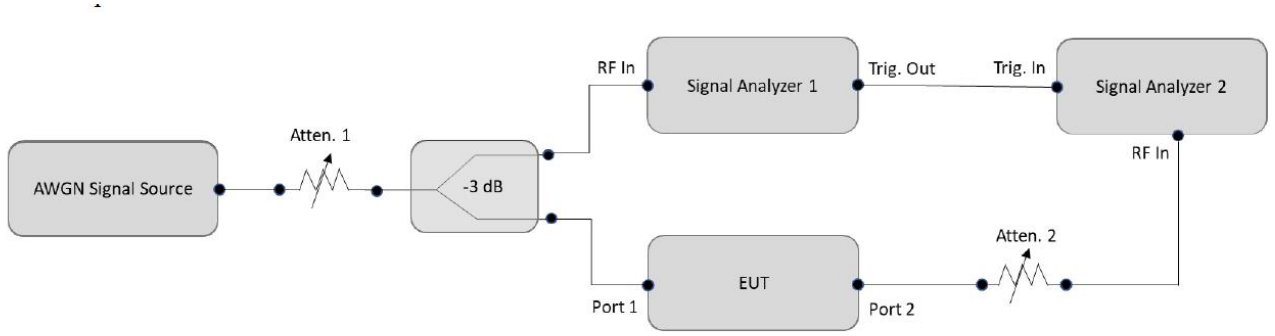


**Figure 2. Contention-based protocol test setup, conducted method Step-by-Step Procedure, Conducted Setup**

### 7.7.5. Test Result

Band 5

| Test Mode | Antenna | EUT Frequency (MHz) | AWGN Frequency (MHz) | Injected AWGN Power(dBm) | Detection Rate (%) | Adjusted Power Result (dBm) | Limit (dBm) | Margin (dB) |
|---|---|---|---|---|---|---|---|---|
| 802.11ax-HE20 | Ant1 | 6135 | 6135 | -70.35 | 100 | -74.32 | -62 | 12.32 |
| | | | | | Result: Stop Transmission | | | |
| | | | | -77.68 | <90 | -81.32 | -62 | 19.32 |
| | | | | | Result: Minimal Operation | | | |
| | | | | -78.68 | 0 | -82.32 | -62 | 20.32 |
| | | | | | Result: Normal Operation | | | |
| 802.11ax-HE80 | Ant1 | 6145 | 6110 | -67.12 | 100 | -74.32 | -62 | 12.32 |
| | | | | | Result: Stop Transmission | | | |
| | | | | -74.32 | <90 | -81.32 | -62 | 19.32 |
| | | | | | Result: Minimal Operation | | | |
| | | | | -75.32 | 0 | -82.32 | -62 | 20.32 |
| | | | | | Result: Normal Operation | | | |
| | | | 6145 | -66.15 | 100 | -74.59 | -62 | 12.59 |
| | | | | | Result: Stop Transmission | | | |
| | | | | -74.09 | <90 | -81.59 | -62 | 19.59 |
| | | | | | Result: Minimal Operation | | | |
| | | | | -75.09 | 0 | -82.59 | -62 | 20.59 |
| | | | | | Result: Normal Operation | | | |
| | | | 6180 | -66.21 | 100 | -74.27 | -62 | 12.27 |
| | | | | | Result: Stop Transmission | | | |
| | | | | -73.81 | <90 | -81.27 | -62 | 19.27 |
| | | | | | Result: Minimal Operation | | | |
| | | | | -74.81 | 0 | -82.27 | -62 | 20.27 |
| | | | | | Result: Normal Operation | | | |

Note:

1) Adjusted Power = Injected AWGN Power -minimum antenna gain 2.64dBi.
2) Margin = Limit – Adjusted Power.
3) All 6 GHz U-NII Band and antennas had been tested, but only the worst data was recorded in the report.

Band 6

| Test Mode | Antenna | EUT Frequency (MHz) | AWGN Frequency (MHz) | Injected AWGN Power(dBm) | Detection Rate (%) | Adjusted Power Result (dBm) | Limit (dBm) | Margin (dB) |
|---|---|---|---|---|---|---|---|---|
| 802.11ax-HE20 | Ant1 | 6455 | 6455 | -70.27 | 100 | -74.32 | -62 | 12.32 |
| | | | | | Result: Stop Transmission | | | |
| | | | | -77.20 | <90 | -81.32 | -62 | 19.32 |
| | | | | | Result: Minimal Operation | | | |
| | | | | -78.20 | 0 | -82.32 | -62 | 20.32 |
| | | | | | Result: Normal Operation | | | |
| 802.11ax-HE80 | Ant1 | 6465 | 6130 | -66.25 | 100 | -74.32 | -62 | 12.32 |
| | | | | | Result: Stop Transmission | | | |
| | | | | -75.01 | <90 | -81.32 | -62 | 19.32 |
| | | | | | Result: Minimal Operation | | | |
| | | | | -76.01 | 0 | -82.32 | -62 | 20.32 |
| | | | | | Result: Normal Operation | | | |
| | | | 6165 | -65.96 | 100 | -74.59 | -62 | 12.59 |
| | | | | | Result: Stop Transmission | | | |
| | | | | -72.09 | <90 | -81.59 | -62 | 19.59 |
| | | | | | Result: Minimal Operation | | | |
| | | | | -73.09 | 0 | -82.59 | -62 | 20.59 |
| | | | | | Result: Normal Operation | | | |
| | | | 6500 | -66.08 | 100 | -74.27 | -62 | 12.27 |
| | | | | | Result: Stop Transmission | | | |
| | | | | -74.28 | <90 | -81.27 | -62 | 19.27 |
| | | | | | Result: Minimal Operation | | | |
| | | | | -75.28 | 0 | -82.27 | -62 | 20.27 |
| | | | | | Result: Normal Operation | | | |

Note:

4) Adjusted Power = Injected AWGN Power -minimum antenna gain 1.93dBi.

5) Margin = Limit – Adjusted Power.

6) All 6 GHz U-NII Band and antennas had been tested, but only the worst data was recorded in the report.

Band 7

| Test Mode | Antenna | EUT Frequency (MHz) | AWGN Frequency (MHz) | Injected AWGN Power(dBm) | Detection Rate (%) | Adjusted Power Result (dBm) | Limit (dBm) | Margin (dB) |
|---|---|---|---|---|---|---|---|---|
| 802.11ax-HE20 | Ant1 | 6695 | 6695 | -70.21 | 100 | -74.32 | -62 | 12.32 |
| | | | | | Result: Stop Transmission | | | |
| | | | | -77.25 | <90 | -81.32 | -62 | 19.32 |
| | | | | | Result: Minimal Operation | | | |
| | | | | -78.25 | 0 | -82.32 | -62 | 20.32 |
| | | | | | Result: Normal Operation | | | |
| 802.11ax-HE80 | Ant1 | 6705 | 6670 | -66.16 | 100 | -74.32 | -62 | 12.32 |
| | | | | | Result: Stop Transmission | | | |
| | | | | -73.18 | <90 | -81.32 | -62 | 19.32 |
| | | | | | Result: Minimal Operation | | | |
| | | | | -74.18 | 0 | -82.32 | -62 | 20.32 |
| | | | | | Result: Normal Operation | | | |
| | | | 6705 | -66.10 | 100 | -74.59 | -62 | 12.59 |
| | | | | | Result: Stop Transmission | | | |
| | | | | -73.86 | <90 | -81.59 | -62 | 19.59 |
| | | | | | Result: Minimal Operation | | | |
| | | | | -74.86 | 0 | -82.59 | -62 | 20.59 |
| | | | | | Result: Normal Operation | | | |
| | | | 6740 | -66.22 | 100 | -74.27 | -62 | 12.27 |
| | | | | | Result: Stop Transmission | | | |
| | | | | -74.73 | <90 | -81.27 | -62 | 19.27 |
| | | | | | Result: Minimal Operation | | | |
| | | | | -75.73 | 0 | -82.27 | -62 | 20.27 |
| | | | | | Result: Normal Operation | | | |

Note:

7) Adjusted Power = Injected AWGN Power -minimum antenna gain 1.93dBi.

8) Margin = Limit – Adjusted Power.

9) All 6 GHz U-NII Band and antennas had been tested, but only the worst data was recorded in the report.

Band 8

| Test Mode | Antenna | EUT Frequency (MHz) | AWGN Frequency (MHz) | Injected AWGN Power(dBm) | Detection Rate (%) | Adjusted Power Result (dBm) | Limit (dBm) | Margin (dB) |
|---|---|---|---|---|---|---|---|---|
| 802.11ax-HE20 | Ant1 | 7015 | 7015 | -70.15 | 100 | -74.32 | -62 | 12.32 |
| | | | | | Result: Stop Transmission | | | |
| | | | | -76. | <90 | -81.32 | -62 | 19.32 |
| | | | | | Result: Minimal Operation | | | |
| | | | | -77. | 0 | -82.32 | -62 | 20.32 |
| | | | | | Result: Normal Operation | | | |
| 802.11ax-HE80 | Ant1 | 7025 | 6990 | -66.19 | 100 | -74.32 | -62 | 12.32 |
| | | | | | Result: Stop Transmission | | | |
| | | | | -74. | <90 | -81.32 | -62 | 19.32 |
| | | | | | Result: Minimal Operation | | | |
| | | | | -75. | 0 | -82.32 | -62 | 20.32 |
| | | | | | Result: Normal Operation | | | |
| | | | 7025 | -66.06 | 100 | -74.59 | -62 | 12.59 |
| | | | | | Result: Stop Transmission | | | |
| | | | | -73. | <90 | -81.59 | -62 | 19.59 |
| | | | | | Result: Minimal Operation | | | |
| | | | | -74. | 0 | -82.59 | -62 | 20.59 |
| | | | | | Result: Normal Operation | | | |
| | | | 7060 | -66.16 | 100 | -74.27 | -62 | 12.27 |
| | | | | | Result: Stop Transmission | | | |
| | | | | -73. | <90 | -81.27 | -62 | 19.27 |
| | | | | | Result: Minimal Operation | | | |
| | | | | -74. | 0 | -82.27 | -62 | 20.27 |
| | | | | | Result: Normal Operation | | | |

Note:

10) Adjusted Power = Injected AWGN Power -minimum antenna gain 1.93dBi.

11) Margin = Limit – Adjusted Power.

12) All 6 GHz U-NII Band and antennas had been tested, but only the worst data was recorded in the report.

Test Graphs see Appendix C.

## 7.8. Frequency Stability Measurement

### 7.8.1. Test Limit

Manufactures of U-NII devices are responsible for ensuring frequency stability such that an emission is maintained within the band of operation under all conditions of normal operation as specified in the user's manual.

### 7.8.2. Test Procedure Used

**Frequency Stability Under Temperature Variations:**

The equipment under test was connected to an external AC or DC power supply and input rated voltage. RF output was connected to a frequency counter or spectrum analyzer via feed through attenuators. The EUT was placed inside the temperature chamber. Set the spectrum analyzer RBW low enough to obtain the desired frequency resolution and measure EUT 20°C operating frequency as reference frequency. Turn EUT off and set the chamber temperature to highest. After the temperature stabilized for approximately 30 minutes recorded the frequency. Repeat step measure with 10°C decreased per stage until the lowest temperature reached.

**Frequency Stability Under Voltage Variations:**

Set chamber temperature to 20°C. Use a variable AC power supply / DC power source to power the EUT and set the voltage to rated voltage. Set the spectrum analyzer RBW low enough to obtain the desired frequency resolution and recorded the frequency.

Reduce the input voltage to specify extreme voltage variation (±15%) and endpoint, record the maximum frequency change.

### 7.8.3. Test Setup

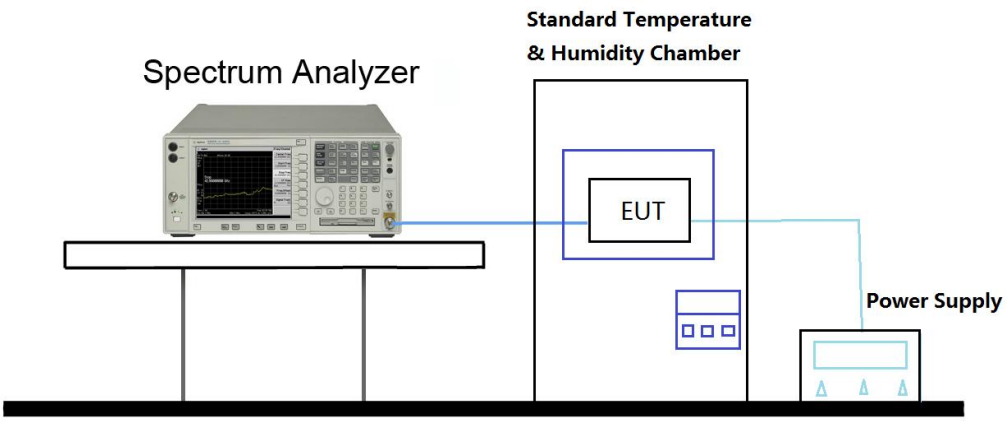

### 7.8.4. Test Result

Operating Frequency 5925-6425MHz:

| Voltage | | | | | | | | |
|---|---|---|---|---|---|---|---|---|
| Test Mode | Antenna | Channel | Voltage [Vdc] | Temperature (℃) | Deviation (Hz) | Deviation (ppm) | Limit (ppm) | Verdict |
| 11AX20MIMO | Ant1 | 5955 | NV | NT | -40000.00 | -6.717045 | 20 | PASS |
| | | | LV | NT | -40000.00 | -6.717045 | 20 | PASS |
| | | | HV | NT | -40000.00 | -6.717045 | 20 | PASS |
| | Ant2 | 5955 | NV | NT | -60000.00 | -10.075567 | 20 | PASS |
| | | | LV | NT | -80000.00 | -13.434089 | 20 | PASS |
| | | | HV | NT | -60000.00 | -10.075567 | 20 | PASS |
| | Ant1 | 6175 | LV | NT | -80000.00 | -12.955466 | 20 | PASS |
| | | | HV | NT | -80000.00 | -12.955466 | 20 | PASS |
| | | | NV | NT | -80000.00 | -12.955466 | 20 | PASS |
| | Ant2 | 6175 | NV | NT | -80000.00 | -12.955466 | 20 | PASS |
| | | | LV | NT | -80000.00 | -12.955466 | 20 | PASS |
| | | | HV | NT | -80000.00 | -12.955466 | 20 | PASS |
| | Ant1 | 6415 | NV | NT | -80000.00 | -12.470772 | 20 | PASS |
| | | | LV | NT | -80000.00 | -12.470772 | 20 | PASS |
| | | | HV | NT | -80000.00 | -12.470772 | 20 | PASS |
| | Ant2 | 6415 | NV | NT | -80000.00 | -12.470772 | 20 | PASS |
| | | | LV | NT | -80000.00 | -12.470772 | 20 | PASS |
| | | | HV | NT | -80000.00 | -12.470772 | 20 | PASS |
| 11AX40MIMO | Ant1 | 5965 | NV | NT | -40000.00 | -6.705784 | 20 | PASS |
| | | | LV | NT | -80000.00 | -13.411567 | 20 | PASS |
| | | | HV | NT | -80000.00 | -13.411567 | 20 | PASS |
| | Ant2 | 5965 | NV | NT | -80000.00 | -13.411567 | 20 | PASS |
| | | | LV | NT | -40000.00 | -6.705784 | 20 | PASS |
| | | | HV | NT | -40000.00 | -6.705784 | 20 | PASS |
| | Ant1 | 6165 | LV | NT | -40000.00 | -6.705784 | 20 | PASS |
| | | | NV | NT | 120000.00 | 19.464720 | 20 | PASS |
| | | | HV | NT | 40000.00 | 6.488240 | 20 | PASS |
| | Ant2 | 6165 | LV | NT | -120000.00 | -19.464720 | 20 | PASS |
| | | | HV | NT | -120000.00 | -19.464720 | 20 | PASS |
| | | | NV | NT | 0.00 | 0.000000 | 20 | PASS |
| | Ant1 | 6405 | NV | NT | -120000.00 | -18.735363 | 20 | PASS |
| | | | LV | NT | -120000.00 | -18.735363 | 20 | PASS |

| | | | | | | | | |
|---|---|---|---|---|---|---|---|---|
| | | | HV | NT | -120000.00 | -18.735363 | 20 | PASS |
| | Ant2 | 6405 | LV | NT | 40000.00 | 6.245121 | 20 | PASS |
| | | | HV | NT | -80000.00 | -12.490242 | 20 | PASS |
| | | | NV | NT | 0.00 | 0.000000 | 20 | PASS |
| 11AX80MIMO | Ant1 | 5985 | LV | NT | 40000.00 | 6.245121 | 20 | PASS |
| | | | HV | NT | -80000.00 | -12.490242 | 20 | PASS |
| | | | NV | NT | 0.00 | 0.000000 | 20 | PASS |
| | Ant2 | 5985 | NV | NT | -80000.00 | -13.366750 | 20 | PASS |
| | | | LV | NT | 80000.00 | 13.366750 | 20 | PASS |
| | | | HV | NT | 80000.00 | 13.366750 | 20 | PASS |
| | Ant1 | 6145 | HV | NT | -80000.00 | -13.018714 | 20 | PASS |
| | | | NV | NT | 0.00 | 0.000000 | 20 | PASS |
| | | | LV | NT | -80000.00 | -13.018714 | 20 | PASS |
| | Ant2 | 6145 | NV | NT | -80000.00 | -13.018714 | 20 | PASS |
| | | | HV | NT | -80000.00 | -13.018714 | 20 | PASS |
| | | | LV | NT | -80000.00 | -13.018714 | 20 | PASS |
| | Ant1 | 6385 | LV | NT | -80000.00 | -12.529366 | 20 | PASS |
| | | | HV | NT | -80000.00 | -12.529366 | 20 | PASS |
| | | | NV | NT | -80000.00 | -12.529366 | 20 | PASS |
| | Ant2 | 6385 | LV | NT | -80000.00 | -12.529366 | 20 | PASS |
| | | | HV | NT | -80000.00 | -12.529366 | 20 | PASS |
| | | | NV | NT | 0.00 | 0.000000 | 20 | PASS |

Operating Frequency 6425-6525MHz:

| Voltage | | | | | | | | |
|---|---|---|---|---|---|---|---|---|
| Test Mode | Antenna | Channel | Voltage [Vdc] | Temperature (℃) | Deviation (Hz) | Deviation (ppm) | Limit (ppm) | Verdict |
| 11AX20MIMO | Ant1 | 6435 | LV | NT | -100000.00 | -15.540016 | 20 | PASS |
| | | | HV | NT | -100000.00 | -15.540016 | 20 | PASS |
| | | | NV | NT | -80000.00 | -12.432012 | 20 | PASS |
| | Ant2 | 6435 | NV | NT | -100000.00 | -15.540016 | 20 | PASS |
| | | | LV | NT | -80000.00 | -12.432012 | 20 | PASS |
| | | | HV | NT | -80000.00 | -12.432012 | 20 | PASS |
| | Ant1 | 6475 | HV | NT | -80000.00 | -12.355212 | 20 | PASS |
| | | | NV | NT | -80000.00 | -12.355212 | 20 | PASS |
| | | | LV | NT | -80000.00 | -12.355212 | 20 | PASS |
| | Ant2 | 6475 | HV | NT | -80000.00 | -12.355212 | 20 | PASS |
| | | | NV | NT | -80000.00 | -12.355212 | 20 | PASS |

| | | | | | | | | |
|---|---|---|---|---|---|---|---|---|
| | | | LV | NT | -100000.00 | -15.444015 | 20 | PASS |
| | Ant1 | 6515 | NV | NT | -80000.00 | -12.279355 | 20 | PASS |
| | | | LV | NT | -80000.00 | -12.279355 | 20 | PASS |
| | | | HV | NT | -80000.00 | -12.279355 | 20 | PASS |
| | Ant2 | 6515 | LV | NT | -80000.00 | -12.279355 | 20 | PASS |
| | | | NV | NT | -80000.00 | -12.279355 | 20 | PASS |
| | | | HV | NT | -80000.00 | -12.279355 | 20 | PASS |
| 11AX40MIMO | Ant1 | 6445 | LV | NT | -80000.00 | -12.412723 | 20 | PASS |
| | | | HV | NT | -80000.00 | -12.412723 | 20 | PASS |
| | | | NV | NT | -80000.00 | -12.412723 | 20 | PASS |
| | Ant2 | 6445 | NV | NT | -80000.00 | -12.412723 | 20 | PASS |
| | | | LV | NT | -80000.00 | -12.412723 | 20 | PASS |
| | | | HV | NT | -80000.00 | -12.412723 | 20 | PASS |
| | Ant1 | 6485 | HV | NT | -120000.00 | -18.504241 | 20 | PASS |
| | | | NV | NT | -120000.00 | -18.504241 | 20 | PASS |
| | | | LV | NT | -80000.00 | -12.336160 | 20 | PASS |
| | Ant2 | 6485 | HV | NT | -80000.00 | -12.336160 | 20 | PASS |
| | | | NV | NT | -120000.00 | -18.504241 | 20 | PASS |
| | | | LV | NT | -80000.00 | -12.336160 | 20 | PASS |
| 11AX80MIMO | Ant1 | 6465 | NV | NT | -80000.00 | -12.374323 | 20 | PASS |
| | | | LV | NT | -80000.00 | -12.374323 | 20 | PASS |
| | | | HV | NT | -80000.00 | -12.374323 | 20 | PASS |
| | Ant2 | 6465 | HV | NT | -80000.00 | -12.374323 | 20 | PASS |
| | | | NV | NT | -80000.00 | -12.374323 | 20 | PASS |
| | | | LV | NT | -80000.00 | -12.374323 | 20 | PASS |

Operating Frequency 6525-6875MHz:

| Voltage | | | | | | | | |
|---|---|---|---|---|---|---|---|---|
| Test Mode | Antenna | Channel | Voltage [Vdc] | Temperature (℃) | Deviation (Hz) | Deviation (ppm) | Limit (ppm) | Verdict |
| 11AX20MIMO | Ant1 | 6535 | LV | NT | -100000.00 | -15.302219 | 20 | PASS |
| | | | HV | NT | -100000.00 | -15.302219 | 20 | PASS |
| | | | NV | NT | -120000.00 | -18.362663 | 20 | PASS |
| | Ant2 | 6535 | NV | NT | -80000.00 | -12.241775 | 20 | PASS |
| | | | LV | NT | -80000.00 | -12.241775 | 20 | PASS |
| | | | HV | NT | -100000.00 | -15.302219 | 20 | PASS |
| | Ant1 | 6695 | NV | NT | -80000.00 | -11.949216 | 20 | PASS |
| | | | LV | NT | -80000.00 | -11.949216 | 20 | PASS |

| | | | | | | | | |
|---|---|---|---|---|---|---|---|---|
| | | | HV | NT | -80000.00 | -11.949216 | 20 | PASS |
| | Ant2 | 6695 | NV | NT | -100000.00 | -14.936520 | 20 | PASS |
| | | | LV | NT | -80000.00 | -11.949216 | 20 | PASS |
| | | | HV | NT | -80000.00 | -11.949216 | 20 | PASS |
| | Ant1 | 6855 | NV | NT | -100000.00 | -14.587892 | 20 | PASS |
| | | | LV | NT | -80000.00 | -11.670314 | 20 | PASS |
| | | | HV | NT | -80000.00 | -11.670314 | 20 | PASS |
| | Ant2 | 6855 | NV | NT | -100000.00 | -14.587892 | 20 | PASS |
| | | | LV | NT | -120000.00 | -17.505470 | 20 | PASS |
| | | | HV | NT | -80000.00 | -11.670314 | 20 | PASS |
| 11AX40MIMO | Ant1 | 6565 | NV | NT | -80000.00 | -12.185834 | 20 | PASS |
| | | | LV | NT | 40000.00 | 6.092917 | 20 | PASS |
| | | | HV | NT | 40000.00 | 6.092917 | 20 | PASS |
| | Ant2 | 6565 | NV | NT | -40000.00 | -6.092917 | 20 | PASS |
| | | | HV | NT | -40000.00 | -6.092917 | 20 | PASS |
| | | | LV | NT | -40000.00 | -6.092917 | 20 | PASS |
| | Ant1 | 6685 | HV | NT | -120000.00 | -17.950636 | 20 | PASS |
| | | | NV | NT | -120000.00 | -17.950636 | 20 | PASS |
| | | | LV | NT | -80000.00 | -11.967091 | 20 | PASS |
| | Ant2 | 6685 | NV | NT | -40000.00 | -5.983545 | 20 | PASS |
| | | | HV | NT | -120000.00 | -17.950636 | 20 | PASS |
| | | | LV | NT | -40000.00 | -5.983545 | 20 | PASS |
| | Ant1 | 6845 | LV | NT | -40000.00 | -5.843682 | 20 | PASS |
| | | | HV | NT | -120000.00 | -17.531045 | 20 | PASS |
| | | | NV | NT | 120000.00 | 17.531045 | 20 | PASS |
| | Ant2 | 6845 | LV | NT | 80000.00 | 11.687363 | 20 | PASS |
| | | | HV | NT | 80000.00 | 11.687363 | 20 | PASS |
| | | | NV | NT | 40000.00 | 5.843682 | 20 | PASS |
| 11AX80MIMO | Ant1 | 6625 | NV | NT | -80000.00 | -12.075472 | 20 | PASS |
| | | | LV | NT | -80000.00 | -12.075472 | 20 | PASS |
| | | | HV | NT | 0.00 | 0.000000 | 20 | PASS |
| | Ant2 | 6625 | LV | NT | -80000.00 | -12.075472 | 20 | PASS |
| | | | HV | NT | -80000.00 | -12.075472 | 20 | PASS |
| | | | NV | NT | 0.00 | 0.000000 | 20 | PASS |
| | Ant1 | 6705 | NV | NT | -80000.00 | -11.931394 | 20 | PASS |
| | | | LV | NT | -80000.00 | -11.931394 | 20 | PASS |
| | | | HV | NT | -80000.00 | -11.931394 | 20 | PASS |

| | | | | | | | | |
|---|---|---|---|---|---|---|---|---|
| | Ant2 | 6705 | LV | NT | -80000.00 | -11.931394 | 20 | PASS |
| | | | HV | NT | -80000.00 | -11.931394 | 20 | PASS |
| | | | NV | NT | -80000.00 | -11.931394 | 20 | PASS |
| | Ant1 | 6785 | NV | NT | -80000.00 | -11.790715 | 20 | PASS |
| | | | LV | NT | 0.00 | 0.000000 | 20 | PASS |
| | | | HV | NT | 0.00 | 0.000000 | 20 | PASS |
| | Ant2 | 6785 | NV | NT | -80000.00 | -11.790715 | 20 | PASS |
| | | | LV | NT | -80000.00 | -11.790715 | 20 | PASS |
| | | | HV | NT | -80000.00 | -11.790715 | 20 | PASS |

Operating Frequency 6875-7125MHz:

| Voltage | | | | | | | | |
|---|---|---|---|---|---|---|---|---|
| Test Mode | Antenna | Channel | Voltage [Vdc] | Temperature (℃) | Deviation (Hz) | Deviation (ppm) | Limit (ppm) | Verdict |
| 11AX20MIMO | Ant1 | 6895 | NV | NT | -100000.00 | -14.503263 | 20 | PASS |
| | | | LV | NT | -100000.00 | -14.503263 | 20 | PASS |
| | | | HV | NT | -120000.00 | -17.403916 | 20 | PASS |
| | Ant2 | 6895 | NV | NT | -100000.00 | -14.503263 | 20 | PASS |
| | | | LV | NT | -120000.00 | -17.403916 | 20 | PASS |
| | | | HV | NT | -100000.00 | -14.503263 | 20 | PASS |
| | Ant1 | 6995 | NV | NT | -120000.00 | -17.155111 | 20 | PASS |
| | | | LV | NT | -100000.00 | -14.295926 | 20 | PASS |
| | | | HV | NT | -100000.00 | -14.295926 | 20 | PASS |
| | Ant2 | 6995 | NV | NT | -100000.00 | -14.295926 | 20 | PASS |
| | | | LV | NT | -80000.00 | -11.436741 | 20 | PASS |
| | | | HV | NT | -80000.00 | -11.436741 | 20 | PASS |
| | Ant1 | 7115 | NV | NT | -80000.00 | -11.243851 | 20 | PASS |
| | | | LV | NT | -120000.00 | -16.865777 | 20 | PASS |
| | | | HV | NT | -120000.00 | -16.865777 | 20 | PASS |
| | Ant2 | 7115 | NV | NT | -80000.00 | -11.243851 | 20 | PASS |
| | | | LV | NT | -80000.00 | -11.243851 | 20 | PASS |
| | | | HV | NT | -100000.00 | -14.054814 | 20 | PASS |
| 11AX40MIMO | Ant1 | 6925 | NV | NT | -80000.00 | -11.552347 | 20 | PASS |
| | | | LV | NT | -120000.00 | -17.328520 | 20 | PASS |
| | | | HV | NT | -80000.00 | -11.552347 | 20 | PASS |
| | Ant2 | 6925 | LV | NT | -120000.00 | -17.328520 | 20 | PASS |
| | | | HV | NT | -120000.00 | -17.328520 | 20 | PASS |
| | | | NV | NT | -120000.00 | -17.328520 | 20 | PASS |

| | | | | | | | | |
|---|---|---|---|---|---|---|---|---|
| | Ant1 | 6965 | NV | NT | -120000.00 | -17.229002 | 20 | PASS |
| | | | LV | NT | -120000.00 | -17.229002 | 20 | PASS |
| | | | HV | NT | -120000.00 | -17.229002 | 20 | PASS |
| | Ant2 | 6965 | NV | NT | -80000.00 | -11.486001 | 20 | PASS |
| | | | LV | NT | -80000.00 | -11.486001 | 20 | PASS |
| | | | HV | NT | -80000.00 | -11.486001 | 20 | PASS |
| | Ant1 | 7085 | LV | NT | -40000.00 | -5.645730 | 20 | PASS |
| | | | NV | NT | -40000.00 | -5.645730 | 20 | PASS |
| | | | HV | NT | -40000.00 | -5.645730 | 20 | PASS |
| | Ant2 | 7085 | HV | NT | -80000.00 | -11.291461 | 20 | PASS |
| | | | LV | NT | -120000.00 | -16.937191 | 20 | PASS |
| | | | NV | NT | -120000.00 | -16.937191 | 20 | PASS |
| 11AX80MIMO | Ant1 | 6945 | HV | NT | -80000.00 | -11.519078 | 20 | PASS |
| | | | NV | NT | 0.00 | 0.000000 | 20 | PASS |
| | | | LV | NT | 0.00 | 0.000000 | 20 | PASS |
| | Ant2 | 6945 | NV | NT | 0.00 | 0.000000 | 20 | PASS |
| | | | LV | NT | -80000.00 | -11.519078 | 20 | PASS |
| | | | HV | NT | -80000.00 | -11.519078 | 20 | PASS |
| | Ant1 | 7025 | LV | NT | -80000.00 | -11.387900 | 20 | PASS |
| | | | HV | NT | -80000.00 | -11.387900 | 20 | PASS |
| | | | NV | NT | -80000.00 | -11.387900 | 20 | PASS |
| | Ant2 | 7025 | NV | NT | -80000.00 | -11.387900 | 20 | PASS |
| | | | LV | NT | -80000.00 | -11.387900 | 20 | PASS |
| | | | HV | NT | 0.00 | 0.000000 | 20 | PASS |

Note:

Frequency Tolerance (ppm) = {[Measured Frequency (Hz) - Declared Frequency (Hz)] / Declared Frequency (Hz)} $*10^6$.

## 7.9. Radiated Spurious Emission Measurement and Radiated Restricted Band Edge Measurement

### 7.9.1. Test Limit

15.407 b (6) For transmitters operating within the 5.925–7.125 GHz band: Any emissions outside of the 5.925–7.125 GHz band must not exceed an e.i.r.p. of −27 dBm/MHz.

All out of band emissions appearing in a restricted band as specified in Section 15.205 of the Title 47 CFR must not exceed the limits shown in Table per Section 15.209.

| FCC Part 15 Subpart C Paragraph 15.209 | | |
|---|---|---|
| Frequency [MHz] | Field Strength [uV/m] | Measured Distance [Meters] |
| 0.009 – 0.490 | 2400/F (kHz) | 300 |
| 0.490 – 1.705 | 24000/F (kHz) | 30 |
| 1.705 - 30 | 30 | 30 |
| 30 - 88 | 100 | 3 |
| 88 - 216 | 150 | 3 |
| 216 - 960 | 200 | 3 |
| Above 960 | 500 | 3 |

### 7.9.2. Test Procedure Used

KDB 789033 D02v02r01 – Section G

ANSI C63.10-2013 – Section 12.7.7.2, 12.7.7.6, 12.7.5

### 7.9.3. Test Setting

**Peak Measurements above 1GHz**

1. Analyzer center frequency was set to the frequency of the radiated spurious emission of interest
2. RBW = 1MHz
3. VBW = 3MHz
4. Detector = peak
5. Sweep time = auto couple
6. Trace mode = max hold
7. Trace was allowed to stabilize

**Quasi-Peak Measurements below 1GHz**

1. Analyzer center frequency was set to the frequency of the radiated spurious emission of interest
2. Span was set greater than 1MHz
3. RBW = 120 kHz
4. Detector = CISPR quasi-peak
5. Sweep time = auto couple
6. Trace was allowed to stabilize

**Average Measurements above 1GHz (Method AD)**

1. Analyzer center frequency was set to the frequency of the radiated spurious emission of interest
2. RBW = 1MHz
3. VBW = 3MHz
4. Detector = power average (Average)
5. Number of measurement points = 1001 (Number of points must be > 2 x span/RBW)
6. Sweep time = auto
7. Trace was averaged over at 100 sweeps

### 7.9.4. Test Setup

9kHz ~ 30MHz Test Setup:

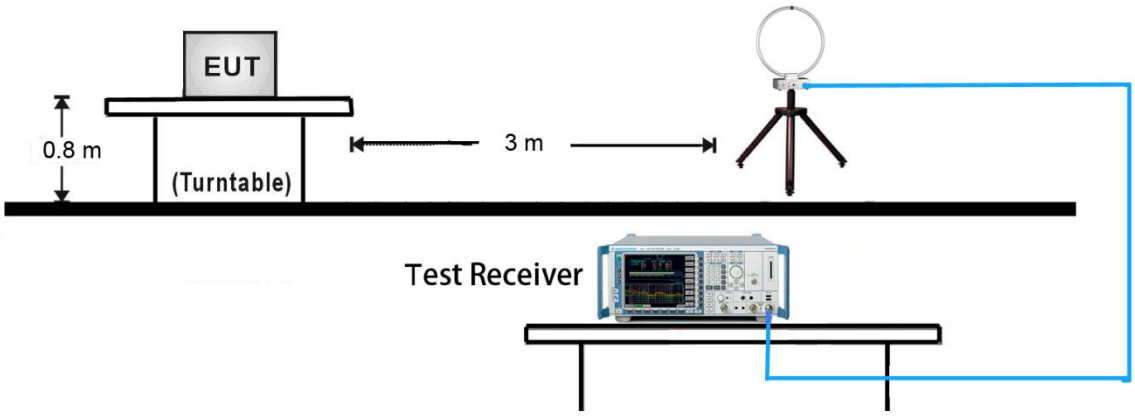


30MHz ~ 1GHz Test Setup:

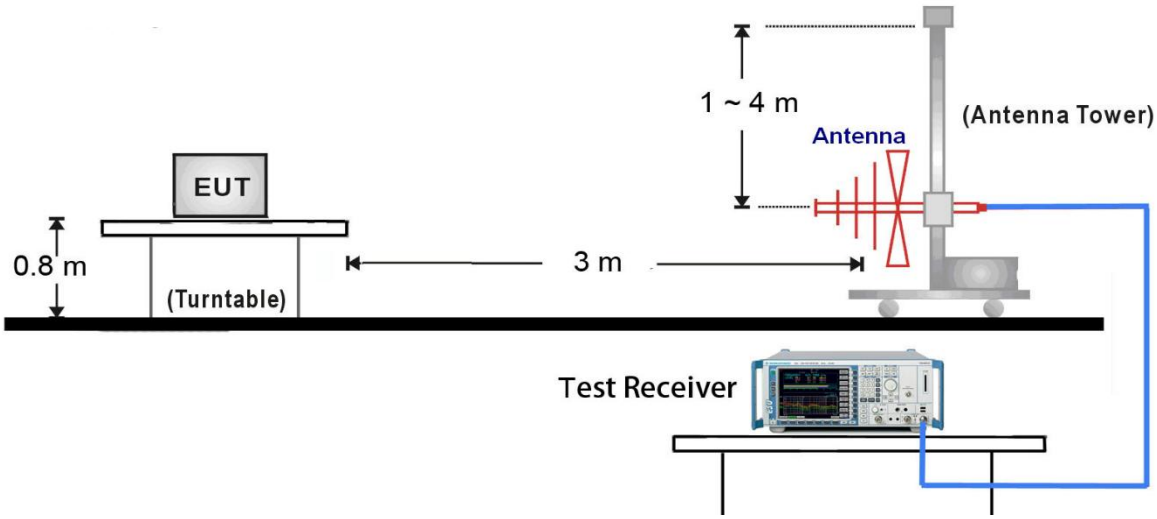


1GHz ~18GHz Test Setup:

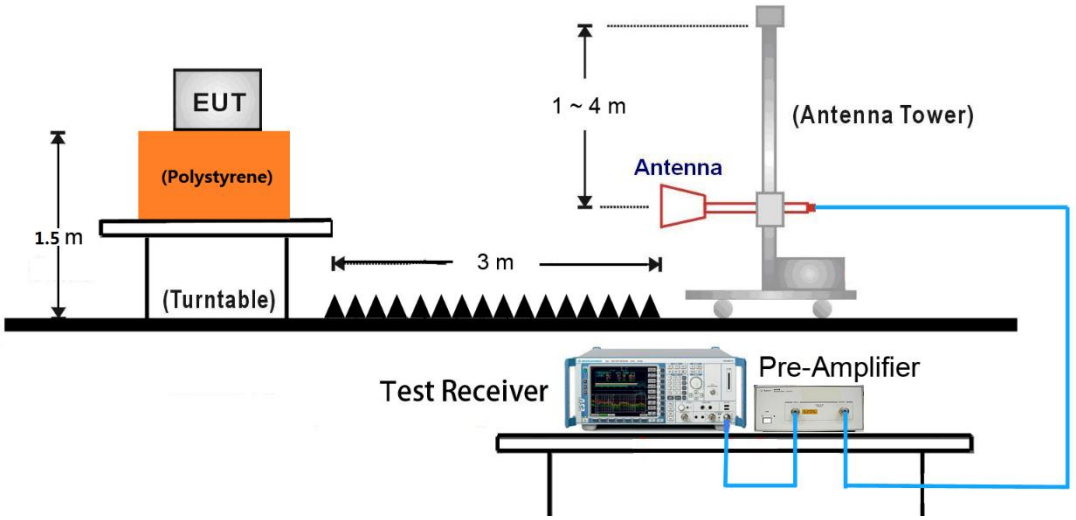


18GHz ~40GHz Test Setup:

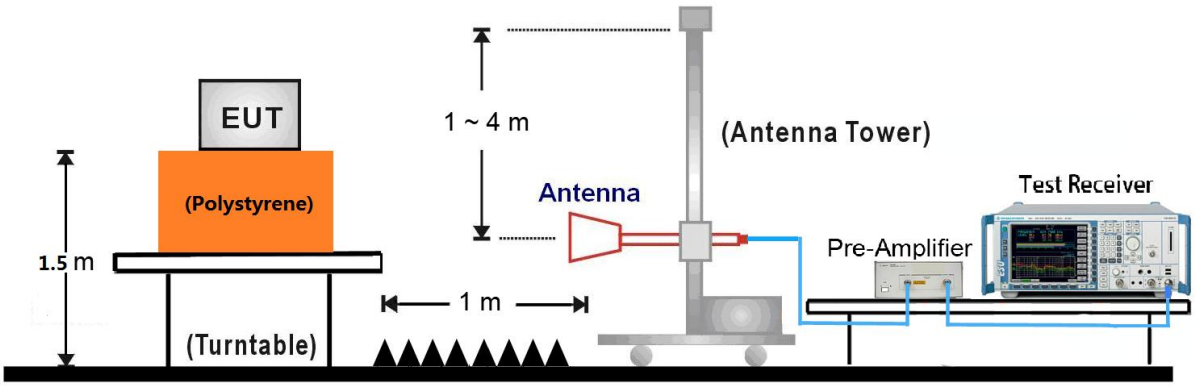

### 7.9.5. Test Result

The Conducted Spurious Emission test data:

Operating Frequency 5925-6425MHz:

| Test Mode | Antenna | Channel | Frequency Range [MHz] | Max. Fre [MHz] | Max. Level [dBm] | Limit [dBm] | Verdict |
|---|---|---|---|---|---|---|---|
| 11AX20MIMO | Ant1 | 5955 | 30~3000 | 2974.16 | -45.24 | ≤-27 | PASS |
| | | | 3000~10000 | 3867.07 | -44.47 | ≤-27 | PASS |
| | | | 10000~40000 | 38850 | -37.94 | ≤-27 | PASS |
| | Ant2 | 5955 | 30~3000 | 2681.32 | -45.15 | ≤-27 | PASS |
| | | | 3000~10000 | 3767.67 | -44.66 | ≤-27 | PASS |
| | | | 10000~40000 | 38818 | -38.22 | ≤-27 | PASS |
| | Ant1 | 6175 | 30~3000 | 2672.41 | -44.93 | ≤-27 | PASS |
| | | | 3000~10000 | 3805.47 | -44.29 | ≤-27 | PASS |
| | | | 10000~40000 | 38906 | -36.84 | ≤-27 | PASS |
| | Ant2 | 6175 | 30~3000 | 2682.71 | -43.11 | ≤-27 | PASS |
| | | | 3000~10000 | 3838.6 | -44.47 | ≤-27 | PASS |
| | | | 10000~40000 | 38087 | -37.24 | ≤-27 | PASS |
| | Ant1 | 6415 | 30~3000 | 2406 | -44.38 | ≤-27 | PASS |
| | | | 3000~10000 | 3837.9 | -43.85 | ≤-27 | PASS |
| | | | 10000~40000 | 38158 | -38.21 | ≤-27 | PASS |
| | Ant2 | 6415 | 30~3000 | 2989.41 | -45.51 | ≤-27 | PASS |
| | | | 3000~10000 | 3903.23 | -43.93 | ≤-27 | PASS |
| 11AX40MIMO | Ant1 | 5965 | 30~3000 | 1939.31 | -44.59 | ≤-27 | PASS |
| | | | 3000~10000 | 3919.8 | -44.61 | ≤-27 | PASS |
| | | | 10000~40000 | 38949 | -38.12 | ≤-27 | PASS |
| | Ant2 | 5965 | 30~3000 | 2496.29 | -45.63 | ≤-27 | PASS |
| | | | 3000~10000 | 3820.87 | -44.25 | ≤-27 | PASS |
| | | | 10000~40000 | 39000 | -37.38 | ≤-27 | PASS |
| | Ant1 | 6165 | 30~3000 | 2947.83 | -45.17 | ≤-27 | PASS |
| | Ant2 | 6165 | 30~3000 | 2507.67 | -44.68 | ≤-27 | PASS |
| | | | 3000~10000 | 5185.63 | -42.16 | ≤-27 | PASS |
| | | | 10000~40000 | 38101 | -37.59 | ≤-27 | PASS |
| | Ant1 | 6405 | 30~3000 | 2621.82 | -45.52 | ≤-27 | PASS |
| | | | 3000~10000 | 5235.8 | -43.05 | ≤-27 | PASS |
| | | | 10000~40000 | 34854 | -37.42 | ≤-27 | PASS |
| | Ant2 | 6405 | 30~3000 | 2706.86 | -45.01 | ≤-27 | PASS |

| | | | | | | | |
|---|---|---|---|---|---|---|---|
| | | | 3000~10000 | 3777 | -44.71 | ≤-27 | PASS |
| | | | 10000~40000 | 38060 | -38.42 | ≤-27 | PASS |
| 11AX80MIMO | Ant1 | 5985 | 30~3000 | 2681.22 | -45.43 | ≤-27 | PASS |
| | | | 3000~10000 | 4574.3 | -38.29 | ≤-27 | PASS |
| | | | 10000~40000 | 38958 | -37.99 | ≤-27 | PASS |
| | Ant2 | 5985 | 30~3000 | 2979.11 | -45.33 | ≤-27 | PASS |
| | | | 3000~10000 | 3795.67 | -44.55 | ≤-27 | PASS |
| | | | 10000~40000 | 38127 | -37.86 | ≤-27 | PASS |
| | Ant1 | 6145 | 30~3000 | 2643.8 | -44.94 | ≤-27 | PASS |
| | | | 3000~10000 | 3785.87 | -43.49 | ≤-27 | PASS |
| | | | 10000~40000 | 38926 | -37.3 | ≤-27 | PASS |
| | Ant2 | 6145 | 30~3000 | 1936.54 | -43.82 | ≤-27 | PASS |
| | | | 3000~10000 | 3955.97 | -44.55 | ≤-27 | PASS |
| | | | 10000~40000 | 38985 | -36.77 | ≤-27 | PASS |
| | Ant1 | 6385 | 30~3000 | 1938.32 | -44.98 | ≤-27 | PASS |
| | | | 3000~10000 | 3805.47 | -43.95 | ≤-27 | PASS |
| | | | 10000~40000 | 39029 | -37.96 | ≤-27 | PASS |
| | Ant2 | 6385 | 30~3000 | 2662.21 | -45.49 | ≤-27 | PASS |
| | | | 3000~10000 | 4541.63 | -42.42 | ≤-27 | PASS |
| | | | 10000~40000 | 38721 | -38.16 | ≤-27 | PASS |

Operating Frequency 6425-6525MHz:

| Test Mode | Antenna | Channel | Frequency Range [MHz] | Max. Fre [MHz] | Max. Level [dBm] | Limit [dBm] | Verdict |
|---|---|---|---|---|---|---|---|
| 11AX20MIMO | Ant1 | 6435 | 30~3000 | 2651.62 | -45.47 | ≤-27 | PASS |
| | | | 3000~10000 | 3809.67 | -44.18 | ≤-27 | PASS |
| | | | 10000~40000 | 38891 | -38.01 | ≤-27 | PASS |
| | Ant2 | 6435 | 30~3000 | 2657.96 | -44.01 | ≤-27 | PASS |
| | | | 3000~10000 | 3813.63 | -44.47 | ≤-27 | PASS |
| | | | 10000~40000 | 38888 | -37.27 | ≤-27 | PASS |
| | Ant1 | 6475 | 30~3000 | 2532.32 | -45.53 | ≤-27 | PASS |
| | | | 3000~10000 | 3805.23 | -44.01 | ≤-27 | PASS |
| | | | 10000~40000 | 37998 | -38.26 | ≤-27 | PASS |
| | Ant2 | 6475 | 30~3000 | 2608.65 | -44.75 | ≤-27 | PASS |
| | | | 3000~10000 | 3771.17 | -43.92 | ≤-27 | PASS |
| | | | 10000~40000 | 38117 | -38.12 | ≤-27 | PASS |

| | | | | | | | |
|---|---|---|---|---|---|---|---|
| | Ant1 | 6515 | 30~3000 | 2406.4 | -45.33 | ≤-27 | PASS |
| | | | 3000~10000 | 3779.33 | -42.9 | ≤-27 | PASS |
| | | | 10000~40000 | 38943 | -38.27 | ≤-27 | PASS |
| | Ant2 | 6515 | 30~3000 | 2823.19 | -44.32 | ≤-27 | PASS |
| | | | 3000~10000 | 3873.83 | -44.81 | ≤-27 | PASS |
| | | | 10000~40000 | 38861 | -37.38 | ≤-27 | PASS |
| 11AX40MIMO | Ant1 | 6445 | 30~3000 | 2660.33 | -44.92 | ≤-27 | PASS |
| | | | 3000~10000 | 3869.17 | -45.09 | ≤-27 | PASS |
| | | | 10000~40000 | 38945 | -38.63 | ≤-27 | PASS |
| | Ant2 | 6445 | 30~3000 | 2687.75 | -45.4 | ≤-27 | PASS |
| | | | 3000~10000 | 3896.47 | -44.14 | ≤-27 | PASS |
| | | | 10000~40000 | 38175 | -37.76 | ≤-27 | PASS |
| | Ant1 | 6485 | 30~3000 | 2900.6 | -45.29 | ≤-27 | PASS |
| | | | 3000~10000 | 3781.43 | -44.19 | ≤-27 | PASS |
| | | | 10000~40000 | 37128 | -38.7 | ≤-27 | PASS |
| | Ant2 | 6485 | 30~3000 | 2811.01 | -44.6 | ≤-27 | PASS |
| | | | 3000~10000 | 3769.53 | -44.55 | ≤-27 | PASS |
| | | | 10000~40000 | 35388 | -38.77 | ≤-27 | PASS |
| 11AX80MIMO | Ant1 | 6465 | 30~3000 | 2619.25 | -45.37 | ≤-27 | PASS |
| | | | 3000~10000 | 5023.47 | -44.95 | ≤-27 | PASS |
| | | | 10000~40000 | 38931 | -37.92 | ≤-27 | PASS |
| | Ant2 | 6465 | 30~3000 | 1937.93 | -42.14 | ≤-27 | PASS |
| | | | 3000~10000 | 3867.77 | -44.49 | ≤-27 | PASS |
| | | | 10000~40000 | 38920 | -37.62 | ≤-27 | PASS |

Operating Frequency 6525-6875MHz:

| Test Mode | Antenna | Channel | Frequency Range [MHz] | Max. Fre [MHz] | Max. Level [dBm] | Limit [dBm] | Verdict |
|---|---|---|---|---|---|---|---|
| 11AX20MIMO | Ant1 | 6535 | 30~3000 | 2952.88 | -44.12 | ≤-27 | PASS |
| | | | 3000~10000 | 8973.1 | -43.93 | ≤-27 | PASS |
| | | | 10000~40000 | 38943 | -37.99 | ≤-27 | PASS |
| | Ant2 | 6535 | 30~3000 | 2662.41 | -44.66 | ≤-27 | PASS |
| | | | 3000~10000 | 3701.17 | -43.68 | ≤-27 | PASS |
| | | | 10000~40000 | 39003 | -36.97 | ≤-27 | PASS |
| | Ant1 | 6695 | 30~3000 | 2668.55 | -44.74 | ≤-27 | PASS |
| | | | 3000~10000 | 3781.67 | -44.62 | ≤-27 | PASS |

| | | | | | | | |
|---|---|---|---|---|---|---|---|
| | | | 10000~40000 | 38019 | -38.09 | ≤-27 | PASS |
| | Ant2 | 6695 | 30~3000 | 2689.83 | -44.52 | ≤-27 | PASS |
| | | | 3000~10000 | 3803.13 | -44.12 | ≤-27 | PASS |
| | | | 10000~40000 | 37831 | -37.83 | ≤-27 | PASS |
| | Ant1 | 6855 | 30~3000 | 2630.24 | -44.83 | ≤-27 | PASS |
| | | | 3000~10000 | 3811.53 | -43.94 | ≤-27 | PASS |
| | | | 10000~40000 | 38980 | -38.17 | ≤-27 | PASS |
| | Ant2 | 6855 | 30~3000 | 2670.53 | -45.52 | ≤-27 | PASS |
| | | | 3000~10000 | 3765.33 | -44.24 | ≤-27 | PASS |
| | | | 10000~40000 | 38802 | -38.01 | ≤-27 | PASS |
| 11AX40MIMO | Ant1 | 6565 | 30~3000 | 2990.69 | -44.23 | ≤-27 | PASS |
| | | | 3000~10000 | 3743.4 | -44.36 | ≤-27 | PASS |
| | | | 10000~40000 | 38633 | -37.44 | ≤-27 | PASS |
| | Ant2 | 6565 | 30~3000 | 2568.56 | -44.9 | ≤-27 | PASS |
| | | | 3000~10000 | 3787.27 | -44.16 | ≤-27 | PASS |
| | | | 10000~40000 | 35817 | -37.66 | ≤-27 | PASS |
| | Ant1 | 6685 | 30~3000 | 2768.64 | -44.12 | ≤-27 | PASS |
| | | | 3000~10000 | 5104.9 | -44.12 | ≤-27 | PASS |
| | | | 10000~40000 | 38888 | -37.29 | ≤-27 | PASS |
| | Ant2 | 6685 | 30~3000 | 2933.67 | -44.56 | ≤-27 | PASS |
| | | | 3000~10000 | 4598.33 | -42.43 | ≤-27 | PASS |
| | | | 10000~40000 | 38763 | -37.86 | ≤-27 | PASS |
| | Ant1 | 6845 | 30~3000 | 2548.76 | -45.29 | ≤-27 | PASS |
| | | | 3000~10000 | 3796.6 | -43.74 | ≤-27 | PASS |
| | | | 10000~40000 | 38879 | -37.72 | ≤-27 | PASS |
| | Ant2 | 6845 | 30~3000 | 2960.4 | -44 | ≤-27 | PASS |
| | | | 3000~10000 | 3819.47 | -44.67 | ≤-27 | PASS |
| | | | 10000~40000 | 38505 | -37.75 | ≤-27 | PASS |
| 11AX80MIMO | Ant1 | 6625 | 30~3000 | 2792.69 | -44.55 | ≤-27 | PASS |
| | | | 3000~10000 | 4599.97 | -41.87 | ≤-27 | PASS |
| | | | 10000~40000 | 38238 | -37.43 | ≤-27 | PASS |
| | Ant2 | 6625 | 30~3000 | 2803.78 | -44.68 | ≤-27 | PASS |
| | | | 3000~10000 | 3812.93 | -43.96 | ≤-27 | PASS |
| | | | 10000~40000 | 38868 | -37.6 | ≤-27 | PASS |
| | Ant1 | 6705 | 30~3000 | 2985.74 | -44.89 | ≤-27 | PASS |
| | | | 3000~10000 | 3717.73 | -43.79 | ≤-27 | PASS |
| | | | 10000~40000 | 38131 | -37.97 | ≤-27 | PASS |

| | | | | | | | |
|---|---|---|---|---|---|---|---|
| | Ant2 | 6705 | 30~3000 | 1938.92 | -44.7 | ≤-27 | PASS |
| | | | 3000~10000 | 3829.97 | -44.05 | ≤-27 | PASS |
| | | | 10000~40000 | 38938 | -38.04 | ≤-27 | PASS |
| | Ant1 | 6785 | 30~3000 | 2645.28 | -44.93 | ≤-27 | PASS |
| | | | 3000~10000 | 3862.17 | -44.13 | ≤-27 | PASS |
| | | | 10000~40000 | 38991 | -37.6 | ≤-27 | PASS |
| | Ant2 | 6785 | 30~3000 | 2768.64 | -44.48 | ≤-27 | PASS |
| | | | 3000~10000 | 3783.77 | -43.86 | ≤-27 | PASS |
| | | | 10000~40000 | 38926 | -37.71 | ≤-27 | PASS |

Operating Frequency 6875-7125MHz:

| Test Mode | Antenna | Channel | Frequency Range [MHz] | Max. Fre [MHz] | Max. Level [dBm] | Limit [dBm] | Verdict |
|---|---|---|---|---|---|---|---|
| 11AX20MIMO | Ant1 | 6895 | 30~3000 | 2748.84 | -45.27 | ≤-27 | PASS |
| | | | 3000~10000 | 3717.73 | -43.86 | ≤-27 | PASS |
| | | | 10000~40000 | 38847 | -38.15 | ≤-27 | PASS |
| | Ant2 | 6895 | 30~3000 | 2954.16 | -44.34 | ≤-27 | PASS |
| | | | 3000~10000 | 3854.23 | -44.77 | ≤-27 | PASS |
| | | | 10000~40000 | 38119 | -37.65 | ≤-27 | PASS |
| | Ant1 | 6995 | 30~3000 | 2607.86 | -45.46 | ≤-27 | PASS |
| | | | 3000~10000 | 3768.37 | -44.68 | ≤-27 | PASS |
| | | | 10000~40000 | 38862 | -38.1 | ≤-27 | PASS |
| | Ant2 | 6995 | 30~3000 | 2643.9 | -45.18 | ≤-27 | PASS |
| | | | 3000~10000 | 3886.9 | -44.47 | ≤-27 | PASS |
| | | | 10000~40000 | 38031 | -37.73 | ≤-27 | PASS |
| | Ant1 | 7115 | 30~3000 | 2485.2 | -44.54 | ≤-27 | PASS |
| | | | 3000~10000 | 3822.97 | -44.51 | ≤-27 | PASS |
| | | | 10000~40000 | 38763 | -38.31 | ≤-27 | PASS |
| | Ant2 | 7115 | 30~3000 | 2659.74 | -45.39 | ≤-27 | PASS |
| | | | 3000~10000 | 3828.1 | -43.93 | ≤-27 | PASS |
| | | | 10000~40000 | 38620 | -37.61 | ≤-27 | PASS |
| 11AX40MIMO | Ant1 | 6925 | 30~3000 | 2635.68 | -44.81 | ≤-27 | PASS |
| | | | 3000~10000 | 3742 | -44.47 | ≤-27 | PASS |
| | | | 10000~40000 | 38819 | -38.5 | ≤-27 | PASS |
| | Ant2 | 6925 | 30~3000 | 2517.57 | -44.88 | ≤-27 | PASS |
| | | | 3000~10000 | 3848.4 | -43.54 | ≤-27 | PASS |

| | | | | | | | |
|---|---|---|---|---|---|---|---|
| | | | 10000~40000 | 38966 | -38.24 | ≤-27 | PASS |
| | Ant1 | 6965 | 30~3000 | 2480.15 | -45.72 | ≤-27 | PASS |
| | | | 3000~10000 | 3864.27 | -44.63 | ≤-27 | PASS |
| | | | 10000~40000 | 38796 | -38.56 | ≤-27 | PASS |
| | Ant2 | 6965 | 30~3000 | 2957.43 | -44.73 | ≤-27 | PASS |
| | | | 3000~10000 | 3734.77 | -44.79 | ≤-27 | PASS |
| | | | 10000~40000 | 38134 | -37.49 | ≤-27 | PASS |
| | Ant1 | 7085 | 30~3000 | 2648.35 | -44.87 | ≤-27 | PASS |
| | | | 3000~10000 | 3819 | -44.53 | ≤-27 | PASS |
| | | | 10000~40000 | 38897 | -38.09 | ≤-27 | PASS |
| | Ant2 | 7085 | 30~3000 | 2714.19 | -44.72 | ≤-27 | PASS |
| | | | 3000~10000 | 5238.83 | -42.18 | ≤-27 | PASS |
| | | | 10000~40000 | 35699 | -37.88 | ≤-27 | PASS |
| 11AX80MIMO | Ant1 | 6945 | 30~3000 | 2973.86 | -45.5 | ≤-27 | PASS |
| | | | 3000~10000 | 3794.27 | -45.23 | ≤-27 | PASS |
| | | | 10000~40000 | 38969 | -37.34 | ≤-27 | PASS |
| | Ant2 | 6945 | 30~3000 | 2563.21 | -45.55 | ≤-27 | PASS |
| | | | 3000~10000 | 3843.27 | -44.79 | ≤-27 | PASS |
| | | | 10000~40000 | 36700 | -37.87 | ≤-27 | PASS |
| | Ant1 | 7025 | 30~3000 | 2983.47 | -45.26 | ≤-27 | PASS |
| | | | 3000~10000 | 3770.93 | -43.93 | ≤-27 | PASS |
| | | | 10000~40000 | 38894 | -37.97 | ≤-27 | PASS |
| | Ant2 | 7025 | 30~3000 | 2714.29 | -44.57 | ≤-27 | PASS |
| | | | 3000~10000 | 3815.73 | -44.03 | ≤-27 | PASS |
| | | | 10000~40000 | 38995 | -37.93 | ≤-27 | PASS |

Test Graphs see Appendix C

The radiated spurious emission and Band Edge test data see Appendix D.

## 7.10. AC Conducted Emissions Measurement

### 7.10.1. Test Limit

| FCC Part 15.207 Limits | | |
|---|---|---|
| Frequency (MHz) | QP (dBμV) | AV (dBμV) |
| 0.15 ~ 0.50 | 66 ~ 56 | 56 ~ 46 |
| 0.50 ~ 5.0 | 56 | 46 |
| 5.0 ~ 30 | 60 | 50 |

Note 1: The lower limit shall apply at the transition frequencies.

Note 2: The limit decreases linearly with the logarithm of the frequency in the range 0.15MHz to 0.5MHz.

### 7.10.2. Test Procedure

The EUT was setup according to ANSI C63.4: 2014 and tested according to ANSI C63.10:2013 requirements. The EUT was placed on a platform of nominal size, 1 m by 1.5 m, raised 80 cm above the conducting ground plane. The vertical conducting plane was located 40 cm to the rear of the EUT. All other surfaces of EUT were at least 80 cm from any other grounded conducting surface. The EUT and simulators are connected to the main power through a line impedance stabilization network (LISN). The LISN provides a 50 ohm /50uH coupling impedance for the measuring equipment. The peripheral devices are also connected to the main power through a LISN. (Please refer to the block diagram of the test setup and photographs) Each current-carrying conductor of the EUT power cord, except the ground (safety) conductor, was individually connected through a LISN to the input power source.

The excess length of the power cord between the EUT and the LISN receptacle were folded back and forth at the center of the lead to form a bundle not exceeding 40 cm in length.

Conducted emissions were investigated over the frequency range from 0.15MHz to 30MHz using a receiver bandwidth of 9 kHz.

### 7.10.3. Test Setup

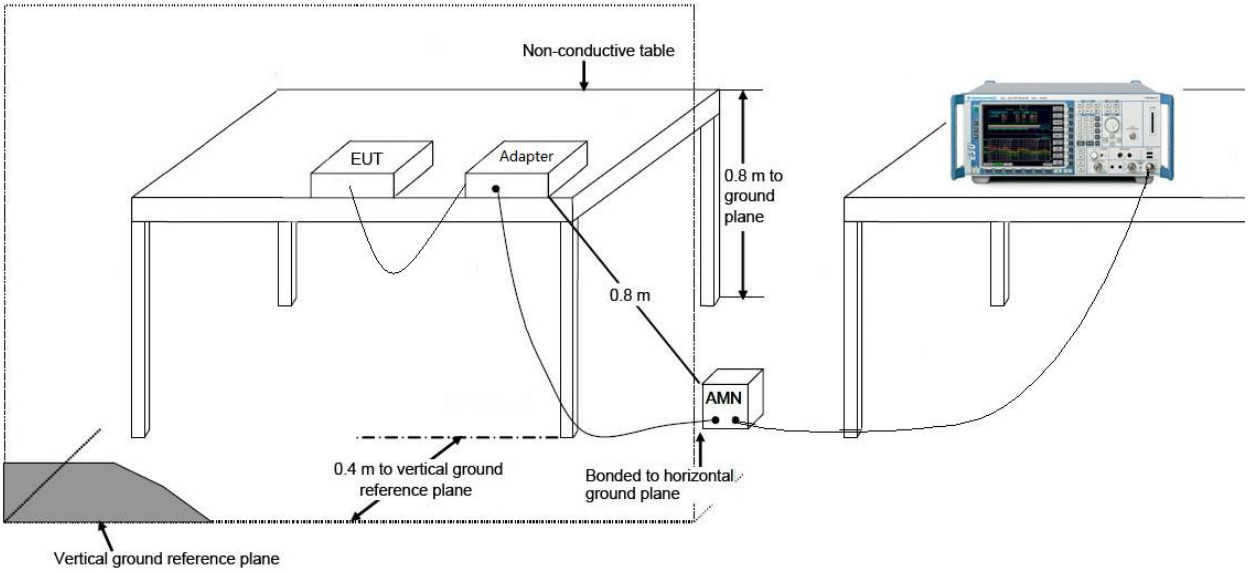


### 7.10.4. Test Result

The product is DC powered. Not applicable.

# 8. CONCLUSION

The data collected relate only the item(s) tested and show that the **WiFi module** is in compliance with Part 15E of the FCC Rules.

The End