M7LW
Installation
Guide

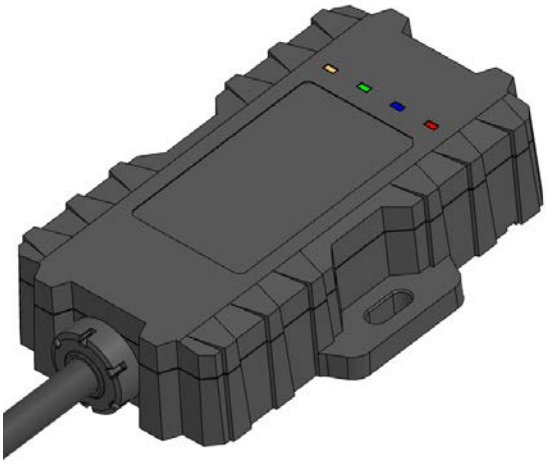

M7LW Installation Guide

M7 4G LTE Vehicle Telematics Unit
[Regulatory and Compliance Statement Goes Here]

OWNERSHIP AND CONFIDENTIALITY

The Software, Software Materials and Printed Documents constitute proprietary property of ZTR Control Systems (ZTR) and include trade secrets and confidential information of ZTR. Customer acknowledges that it acquires only the right to use the Software and Software Materials as permitted hereunder and does not acquire any ownership, right or title in or to the Software, the Software Materials or any Third Party Software.

The customer acknowledges that the information contained on the Software, Software Materials and Printed Documents could be used to the detriment of ZTR and that the disclosure could cause irreparable harm to ZTR. Accordingly, the customer undertakes to treat confidentially all information and not to disclose it to any third party.

No part of this document may be reproduced in any form or by any means, electronic or mechanical, including photocopying or printing, without the express written permission of ZTR Control Systems.

The data and illustrations found in this book are not binding. ZTR Control Systems reserves the right to modify its products in line with its policy of continuous product development. A notice of changes may be released for any modifications that may significantly affect the user.

All ZTR Control Systems products, images and marketing materials are protected by various patents, copyrights, and/or trademarks.

M7LW Installation Guide

WARNINGS AND PRECAUTIONS

HANDLING LI-ION CELLS:

All M7LW devices contain an internal Lithium-thionyl Chloride (Li-Ion) battery, and must be handled properly during installation, normal use and removal.

Li-Ion cells contain a large amount of energy and react extremely violently when exposed to moisture in the atmosphere. Risk of fire or explosion exists only if the battery is handled improperly and/or abused mechanically, electrically or thermally. Proper handling means the battery must **NOT** be subjected to the following conditions:

- Short circuit
- Puncturing
- Recharging
- Crushing
- Incineration
- Immersion in water
- Exposure to temperature exceeding rated limits

Care must be taken, especially during installation and decommissioning, to **ensure the units are not punctured or crushed**.

In the event of battery ignition, use **ONLY** Class D fire extinguishers on the flame. **DO NOT USE:** water, sand, CO_2, Halon, dry powder, or soda ash extinguishers.

For more information, consult the manufacturer Safety Data Sheet (SDS) for standard Lithium Thinoyl Chloride batteries.

DISPOSAL OF LI-ION CELLS:

Lithium Ion batteries are often subject to local, state or provincial laws and regulations regarding disposal. They cannot be simply disposed of in the trash. Check with your local landfill/recycling facility for hazardous waste disposal requirements and safe disposal options.

The following instructions and any accompanying documentation, drawings and specifications are the property of ZTR CONTROL SYSTEMS. They are issued in strict confidence and shall not be reproduced, copied or used as the basis for sale or manufacture of any apparatus without prior written permission from ZTR CONTROL SYSTEMS.

1. Installation Documents Requirements

For reference during the installation of the M7LW, please be sure to bring along the following documents for your reference as needed:

- Control panel Installation & Operation Manual relevant to your equipment package
- Schematics of the asset you are working on, if applicable
- M7LW Installation Guide
- The device installation may be nearby the body ,and the distance maybe less than 20 cm.

2. Electrical Requirements

The following lists the electrical requirements for power and signal connections that are necessary for the M7LW to operate.

- Power Supply Operational Range:
  - Battery Supply = 6 – 90V DC

- Digital Input Signal Range:
  - Logic High (true, ON) = 6 – 60V DC
  - Logic Low (false, OFF) = -0.3 – 5V DC

- Digital Output Signal Range:
  - Sinks voltage signals between -0.3 – 60V DC @ 200mA

- Analog Input Signal Range:
  - Voltage = 0 – 60V DC
    Or…
  - Current = 4 – 20mA

3. Supplies

The following information will help you understand what comes in the install kit and also provide suggestions on additional supplies you may need for installation.

A. Available M7LW Telematics:

Your kit will include the following:

- M7LW
- M7LW Installation Guide

B. What is Not Included in the Kit:

- The following are optional supplies that are **not** provided in this kit which you may need to use during the installation of the device:
  - Cable Ties
  - Cable Tie Anchors
  - Rubber Cable Gland

4. Location and Installation Considerations

- The M7LW device will need to transmit cellular signals, as well as receive GPS positioning signals. When looking for mounting locations, you want to find a location that will allow these transmissions freely.

- Optimal mounting locations include:
  - Horizontally mounted under fiberglass or plastic hood
  - Horizontally mounted on top side of the equipment, facing the sky

- Although these optimal locations may not be easily achieved in some equipment, the M7LW may be mounted in other areas and orientations:
  - Vertically on the side of the machine
  - Inside the equipment/machine with open view to the sky
    - Ie. Operator Cab

:IMPORTANT NOTE:

Avoid locations that limit communications such as inside metal control cabinets and areas completely surrounded by metal.
Mount M7LW in a location that does not expose it to potential physical damage when equipment is in normal use.

5. Wiring

The M7LW has a 36 inch wire harness with loose wires at the end. **Figure 1** outlines the wire designations of this wire harness. Refer to **section 2: Electrical Requirements** for more in-depth electrical requirements that must be met for each relevant connection while wiring the M7LW into your asset.

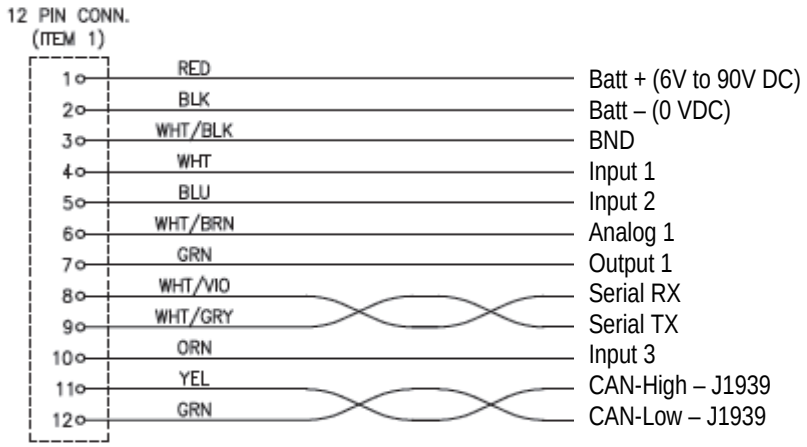

Figure 1: 12-Pin Connector Pin References

6. Testing

With the M7LW connected and powered up, confirm that the LED's from **Figure 2** illuminate.

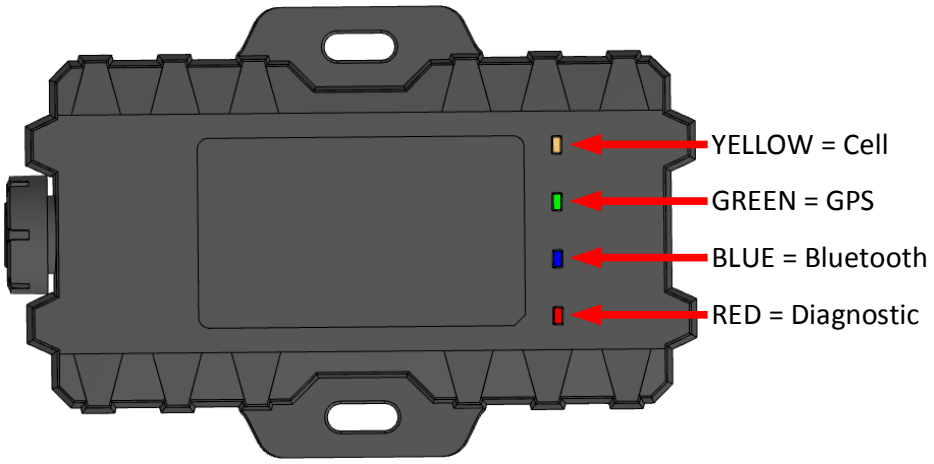

Figure 2: M7LW Status Indicators

Appendix A: Label Revision History

This section will illustrate any changes to the product label as a result of a revision/update.

Revision:	Date: (MM/DD/YYYY)	Author:	Reason:
1	05/29/2020	C. Bolte	Initial release

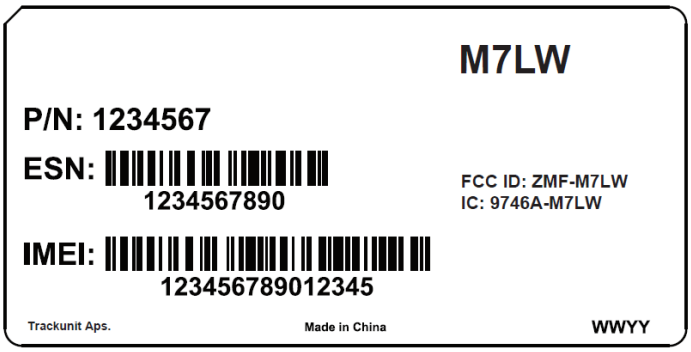

79.5x39.5mm

FCC STATEMENTS
WARNING: Changes or modifications to this unit not expressly approved by the party responsible for compliance could void the user's authority to operate the equipment.
This device complies with Part 15 of the FCC Rules. Operation is subject to the following two conditions: (1) this device may not cause harmful interference, and (2) this device must accept any interference received, including interference that may cause undesired operation.

NOTE: This equipment has been tested and found to comply with the limits for a Class B digital device, pursuant to Part 15 of the FCC Rules. These limits are designed to provide reasonable protection against harmful interference in a residential installation. This equipment generates uses and can radiate radio frequency energy and, if not installed and used in accordance with the instructions, may cause harmful interference to radio communications. However, there is no guarantee that interference will not occur in a particular installation. If this equipment does cause harmful interference to radio or television reception, which can be determined by turning the equipment off and on, the user is encouraged to try to correct the interference by one or more of the following measures:
-- Reorient or relocate the receiving antenna.
-- Increase the separation between the equipment and receiver.
-- Connect the equipment into an outlet on a circuit different from that to which the receiver is connected.
-- Consult the dealer or an experienced radio/TV technician for help.

SAR:
1.The radiated output power of this device is below the FCC radio frequency exposure limits. Nevertheless, the device should be used in such a manner that the potential for human contact is minimized during normal operation.
The exposure standard for wireless devices employs a unit of measurement known as the Specific Absorption Rate, or SAR. The SAR limit set by the FCC is 1.6 W/Kg. Tests for SAR are conducted using standard operating positions accepted by the FCC with the device transmitting at its highest certified power level in all tested frequency bands. Although the SAR is determined at the highest certified power level, the actual SAR level of the device while operating can be well below the maximum value. This is because the device is

designed to operate at multiple power levels so as to use only the power required to reach the network. In general, the closer you are to a wireless base station antenna, the lower the power output. To avoid the possibility of exceeding the FCC radio frequency exposure limits, human proximity to the antenna should be minimized.

For body worn operation, this model phone has been tested and meets the FCC RF exposure.Guidelines when used with an accessory designated for this product or when used with an accessory that Contains no metal and that positions the handset a minimum of 10mm from the body.

2. The maximum SAR value is 1.106W/kg when the phone used 0mm close to user.

INDUSTRY CANADA
This device complies with Industry Canada licence-exempt RSS standard(s). Operation is subject to the following two conditions: (1) this device may not cause interference, and (2) this device must accept any interference, including interference that may cause undesired operation of the device.

Le présent appareil est conforme aux CNR d'Industrie Canada applicables aux appareils radio exempts de licence. L'exploitation est autorisée aux deux conditions suivantes : (1) l'appareil ne doit pas produire de brouillage, et (2) l'utilisateur de l'appareil doit accepter tout brouillage radioélectrique subi, meme si le brouillage est susceptible d'en compromettre le fonctionnement

This EUT is in compliance with SAR for general population/uncontrolled exposure limits in ISED RSS-102 and had been tested in accordance with the measurement methods and procedures specified in IEEE 1528 and IEC 62209. This device and its antenna(s) must not be co-located or operating in conjunction with any other antenna or transmitter.

For body-worn operation, the device has been tested and meets the standards RSS-102&IEEE 1528-2013 of IC RF exposure, The maximum SAR value is 1.106W/kg when the device used 0mm close to user.

Cetappareilestconforme aux limitesd'exposition DAS incontrôlée pour la populationgénérale de la norme CNR-102 science de l' innovation et le développementéconomique Canadaet a ététestéenconformité avecles méthodes de mesure et procédurespécifiéesdans IEEE 1528 et IEC 62209.Cetappareil et saousesantennes ne doivent pas êtreco-localisésoufonctionnerenconjonction avec tout autreantenneoutransmetteur.

Pour un fonctionnement porté sur le corps, l' appareil a été testé et répond aux normes RSS-102&IEEE 1528-2013 d' exposition aux RF IC, la valeur maximale de das est de 1.106W/kg lorsque l' appareil est utilisé à proximité de l' utilisateur.