Microzone®
DIGITAL PROPORTIONAL R/C SYSTEM

2.4GHz
FHSS

Version number:V1.0.0

C7-MINI

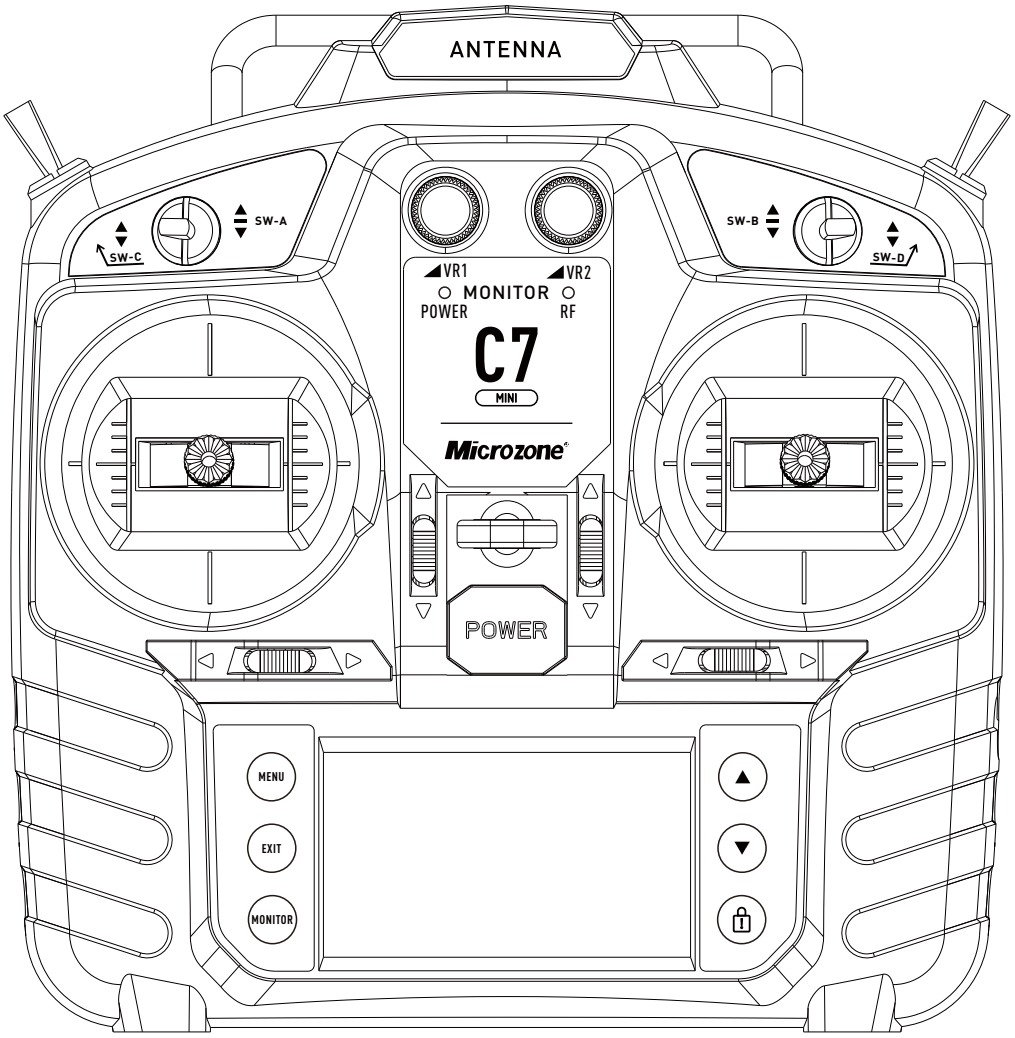

PRODUCT MANUAL

Please read the manual before use

This equipment has been tested and found to comply with the limits for a Class B digital device, pursuant to part 15 of the FCC Rules. These limits are designed to provide reasonable protection against harmful interference in a residential installation. This equipment generates, uses and can radiate radio frequency energy and, if not installed and used in accordance with the instructions, may cause harmful interference to radio communications. However, there is no guarantee that interference will not occur in a particular installation. If this equipment does cause harmful interference to radio or television reception, which can be determined by turning the equipment off and on, the user is encouraged to try to correct the interference by one or more of the following measures:

- IReorient or relocate the receiving antenna.
- IIncrease the separation between the equipment and receiver.
- IConnect the equipment into an outlet on a circuit different from that to which the receiver is connected.
- IConsult the dealer or an experienced radio/TV technician for help.

This device complies with part 15 of the FCC rules. Operation is subject to the following two conditions: (1) This device may not cause harmful interference, and (2) this device must accept any interference received, including interference that may cause undesired operation.

Caution: Any changes or modifications not expressly approved by the party responsible for compliance could void the user's authority to operate this equipment.

This equipment complies with FCC RF radiation exposure limits set forth for an uncontrolled environment. This device and its antenna must not be co-located or operating in conjunction with any other antenna or transmitter.

CE

Hereby, MICROZONE ELECTRONICE (HK) CO., LIMITED declares that this device is compliance with the essential requirements and other relevant provisions of Directive 2014/53/EU.
The declaration of conformity may be consulted at www.microzone.cn.
This product has been so constructed that the product complies with the requirement of with Article 10(2) as it can be operated in at least one Member State as examined and the product is compliant with Article 10(10).

This device meets the EU requirements on the limitation of exposure of the general public to electromagnetic fields by way of health protection.

Operating Frequency (Max. EIRP)
2405MHz - 2475MHz (1.82 dBm)

	AT	BE	BG	CH	CY	CZ	DE	DK
	EE	EL	ES	FI	FR	HR	HU	IE
	IS	IT	LI	LT	LU	LV	MT	NL
	NO	PL	PT	RO	SE	SI	SK	UK

REMOTE CONTROL FUNCTION ANALYSIS

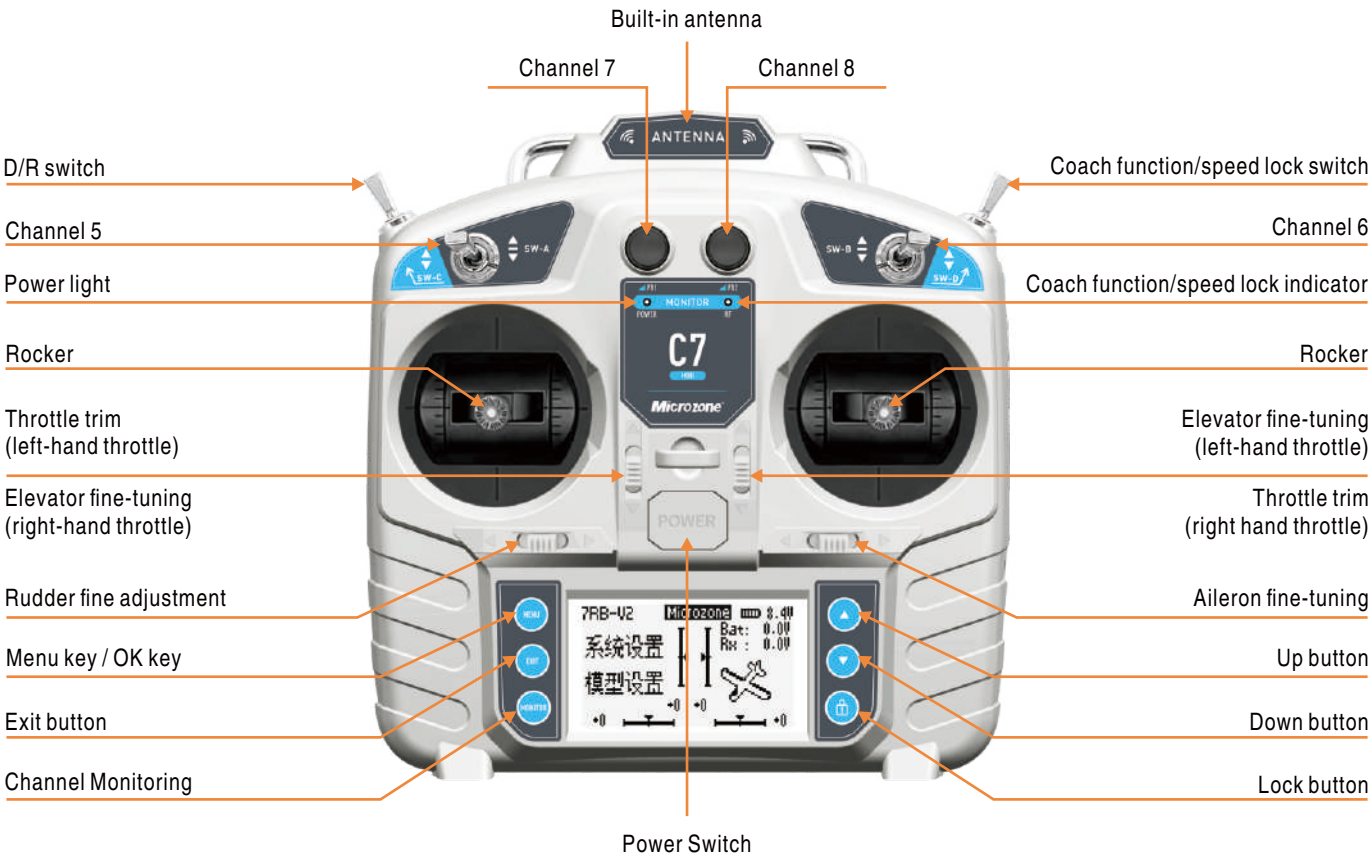

STANDARD RECEIVER FUNCTION ANALYSIS

MC8RE-V2

Contact frequency alignment
After the receiver is powered on, press the touch button to turn on the power switch of the remote control, and the frequency matching is successful

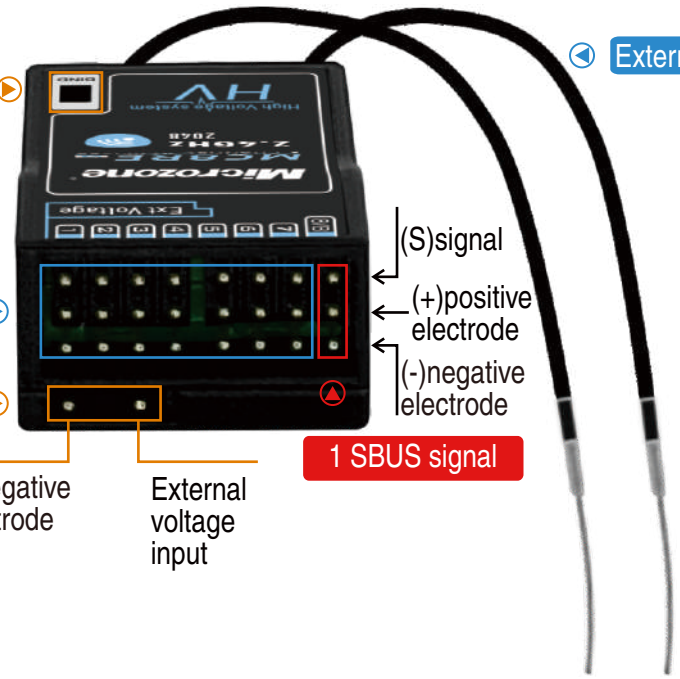

REMOTE CONTROL SPECIFICATIONS AND PARAMETERS

Model	C7-MINI
Color	Off-white
Display color	Black and white 128*64
Language	Chinese/English
Number of channels	15
Applications	Fixed-wing/Car/Boat/Multi-axis/Lawn mower/ Intelligent agricultural machinery
Control range	>800m
Frequency range	2405-2475MHz
Rocker dynamic range	80%-120%
Fine-tuning method	Electronic fine-tuning
Transmitting power	⩽100mw
Input voltage	DC4-8.4V
Use temperature	-20~45°C
Modulation mode	FSK
Remote control power supply requirements	4 x 5 batteries or 2S lithium batteries
Low voltage alarm	Yes
Analog Picking (PPM)	Yes
Runaway protection settings	Support
Support receivers	MC8RE-V2/MC9002/MC6RE-V2/MC7RB-V2/MC3RB/ MC4RB/MC6RE/MC7RB/MC8RE/E6R-E/M-BUS
Size	160*80*165mm
Weight	470g

RECEIVER SPECIFICATIONS AND PARAMETERS

Model	MC8RE-V2
Color	Teal transparent
Applications	Fixed wing/Multi-axis/Car/Boat
Channel output	7 PWM signals,1 SBUS signals,1 external voltage input
Frequency range	2405MHz-2475MHz
Control range	>1000m
Receiver supply voltage	DC:4.5-6V
Use temperature	-20~45°C
Voltage return	Support
SBUS signal	Support
Frequency pairing mode	Contact to frequency
Recovery performance	Fast signal recovery
Runaway protection settings	Support
Remote control support	C7-MINI/8B-MINI/C10-MINI
Antenna type	External dual antenna
Antenna length	150mm
Size	46*25*14 (mm)
Weight	10g

DETAILED DESCRIPTION

Power supply:
DC4-8.4V, can be installed into the battery compartment using four No. 5 batteries, as shown in the following figure,

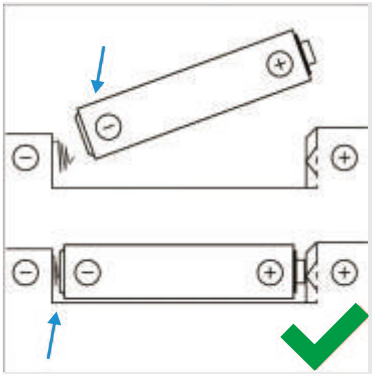

Alternatively, insert a 2S lithium battery into the battery compartment socket, as shown in the following figure,

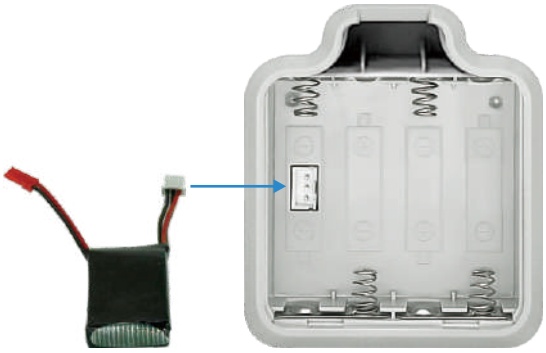

You can also use an external power supply to connect to the DC power socket on the right side of the remote control, as shown in the following figure,When using an external power supply, please Remove the battery from the remote control battery compartment first.

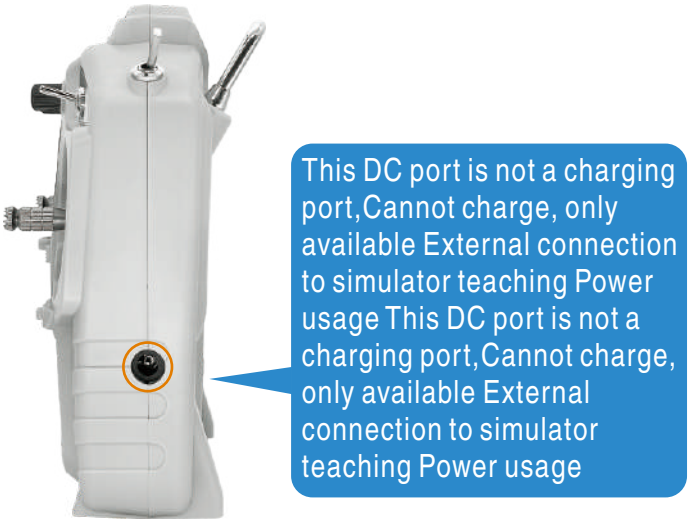

First use:

When unpacking for the first time, please compare the frequency between the transmitter and receiver. After successful frequency comparison, the transmitter and receiver will receive Conduct short distance testing on the machine, holding the transmitter 10 to 15 meters away from the receiver, and shaking the transmitter Rocker to observe if the model is controlled by the transmitter. If controlled, it indicates that the transmitter and receiver are working properly.

Frequency pairing:

After the remote control is turned off and the receiver is powered on, press the frequency control button on the receiver, and the indicator light will flash quickly, the receiver will enter the frequency control mode, as shown in the following figure, then, turn on the remote control, and the receiver indicator light will turn on, the receiver will receive the signal normally.

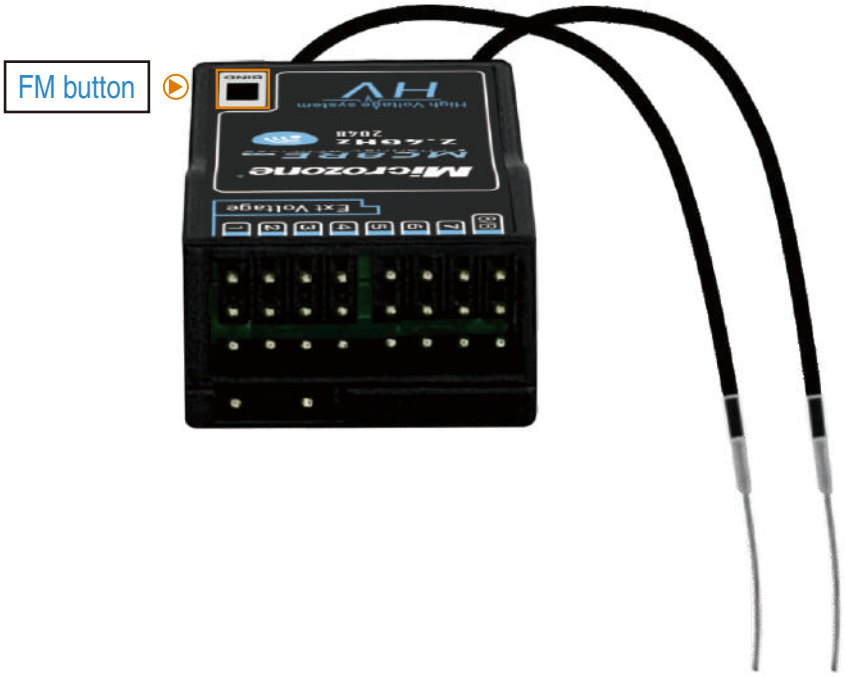

Low voltage alarm:

When the voltage of 4 x 5 batteries is lower than 4V, and the voltage of 2 x Li-ion batteries is lower than 7V, a ticking sound will be made, and the remote control power indicator will blink, indicating that the power is low and needs to be charged.

Suggestions for safe shutdown:

To ensure the safety of the aircraft model and oneself, after the aircraft model motor stops running, first turn off the power supply of the model, and then turn it off again Turn off the transmitter power.

Remote Calibration:

Pull the left rocker to the upper right corner, pull the right rocker to the upper left corner, as follows,

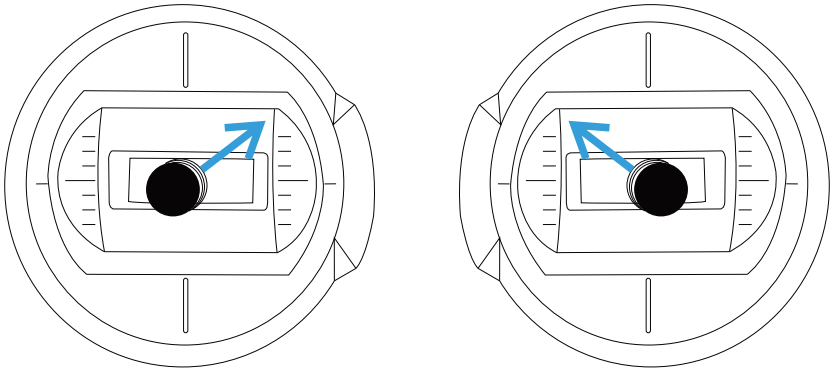

At the same time, turn on the power of the remote control and enter into the joystick calibration state, first pull the two joysticks of the remote control left, right, up, down and to the maximum extent as shown in the figure below,

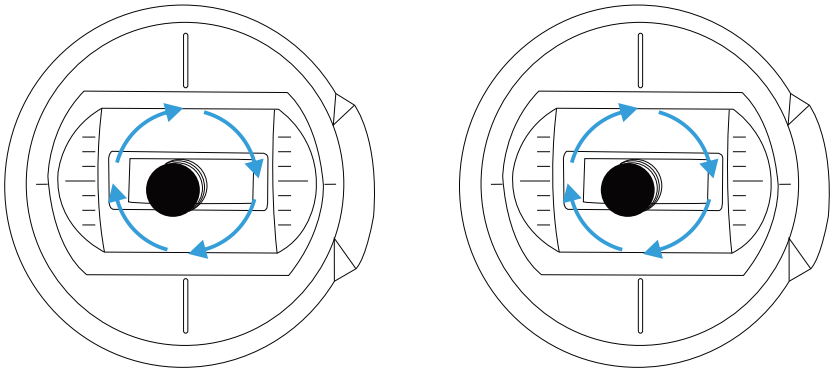

Then pull the rocker to the center position as shown below, and finally pull the D/R switch, the calibration is complete.

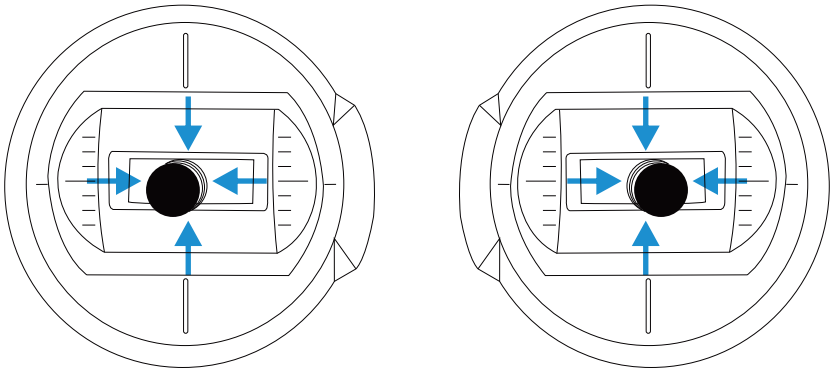

Fine adjustment switch:

The lower left trimming switch corresponds to channel 4, and the right trimming switch corresponds to channel 1; Upper left fine adjustment switch, left mode Corresponds to channel 3, and the right arrow mode corresponds to channel 2; Upper right fine adjustment switch, left mode corresponds to channel 2, right mode Equation corresponds to channel 3; As shown in the following figure.

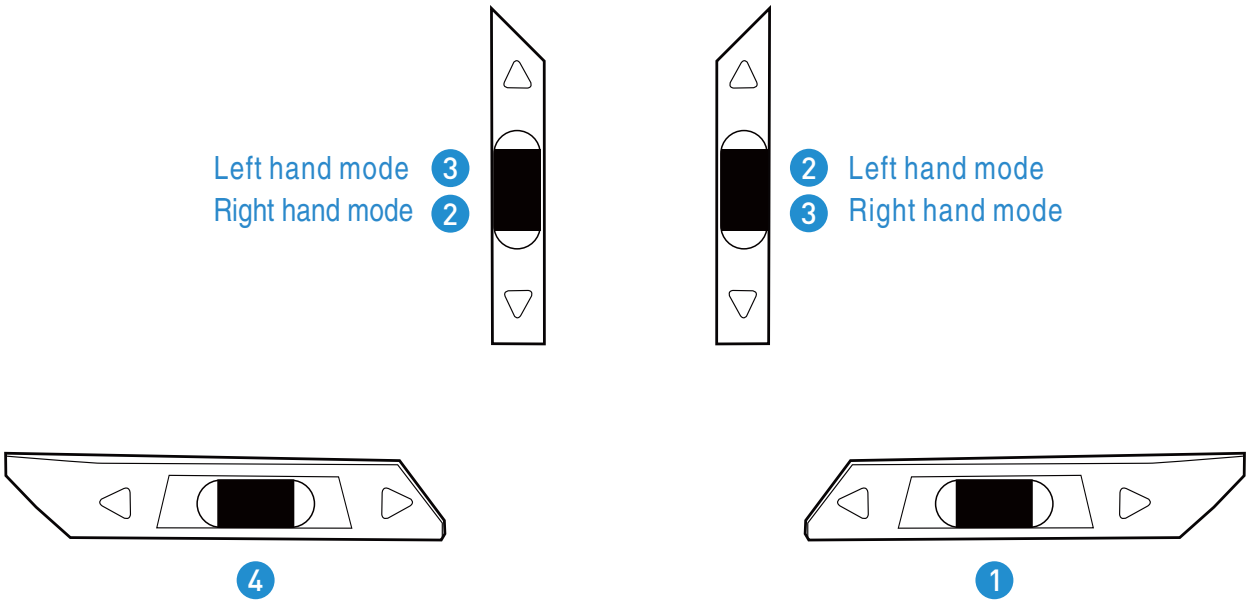

OPERATION PAGE DESCRIPTION

Boot page:

Main page:

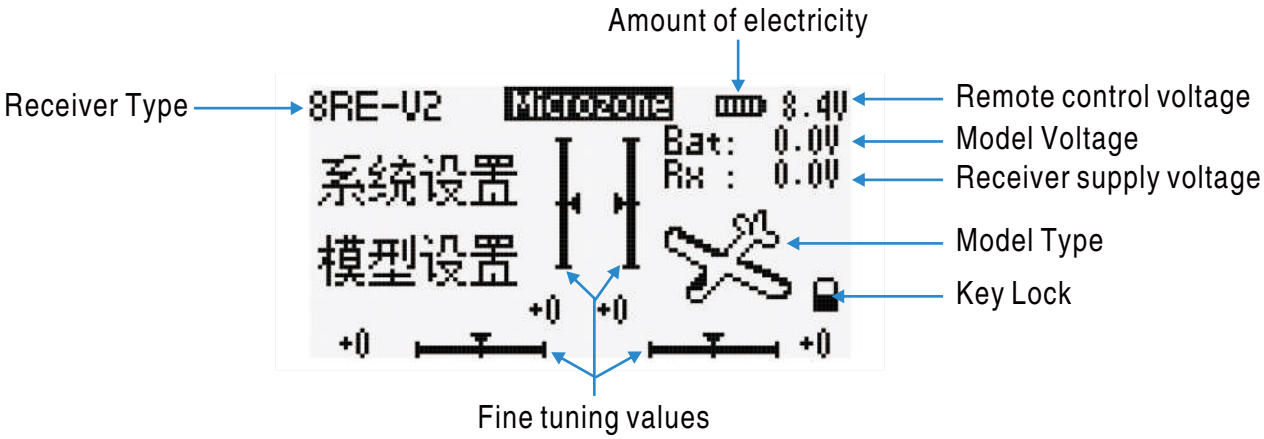

Channel monitoring:

Press <MONITOR> key to enter channel monitoring, channel monitoring can see the information of channels 1-8, and then press<MONITOR> key to exit channel monitoring.

key to lock.

When no option is selected on the main screen, press the <LOCK> key for 2 seconds to lock, press the <MENU> key, <EXIT> key, <MONITOR> key, <UP> key and <DOWN> key have no effect, the lock symbol will appear on the screen, press the <LOCK> key again for 2 seconds to unlock.

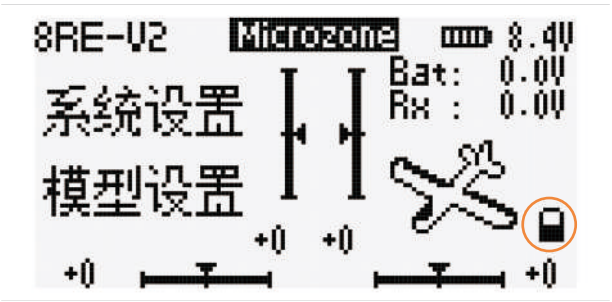

System setting:

Press <MENU> key on the main page to select system setting, and then press <MENU> key to enter system setting, you can press<UP> key or <DOWN> key to select the corresponding option, and then press <MENU> key to enter.

To select the receiver:

Press <UP> key or <DOWN> key to select the corresponding option, press <MENU> key to finish.

Rocker settings:

Left-hand throttle: left rocker to control the throttle, right-hand throttle: right rocker to control the throttle;
Press <UP> key or <DOWN> key to select the corresponding option and press <MENU> to finish.

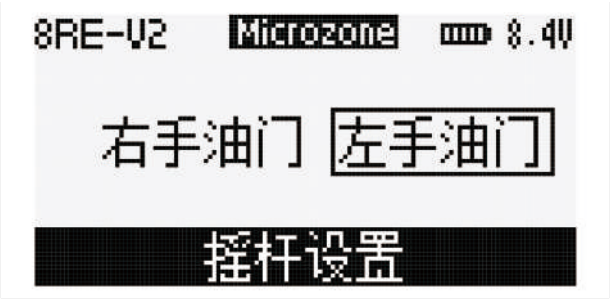

Switch the left and right hand levers:

Remove the back cover of the remote control and exchange the circlips and center levers of the left and right hand rockers as shown below.

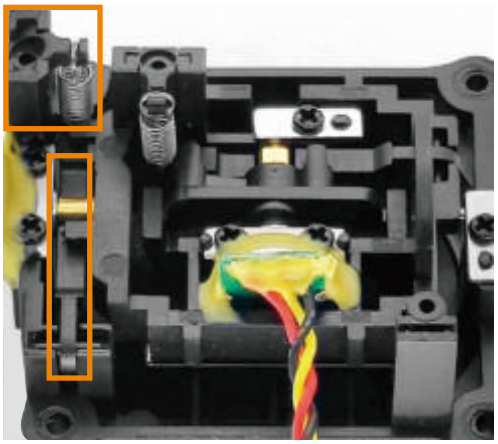

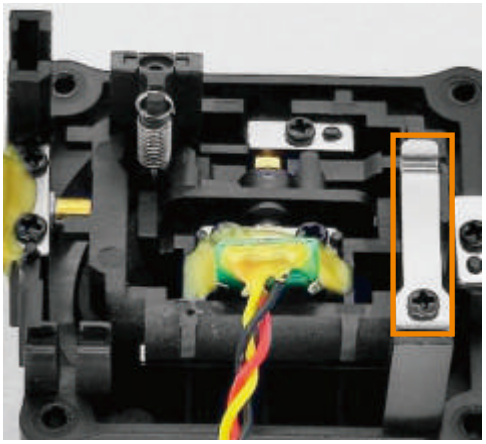

Language setting:

Press <UP> key or <DOWN> key to select the corresponding option, and press <MENU> to finish.

Failure to control protection:

This function is activated when the receiver is unable to receive the transmitter signal normally, activated when the transmitter is turned off and the distance exceeds the range at which the receiver can receive the signal, and returns to the set runaway protection value when it is unable to receive the signal, so as to protect the model from being harmed; Press <UP> or <DOWN> to select the corresponding option, and then press the <MENU> button and press the <UP> or <DOWN> button to adjust the runaway protection value, and then press the <MENU> again or press the <EXIT> button 2 times to complete the adjustment.

Trip setting:

Use to limit the range of motion of the servo face to ensure that the servo face moves only within your desired servo range; Press the <UP> key or <DOWN> key to select the corresponding option, press the <MENU> key, and then press the <UP> key or <DOWN> key to adjust the range amount, (press the <MENU> key again, press the <EXIT> key, and then press the <UP> key or <DOWN> key to select <YES>, and then press the <MENU> key to finish) or (press the <EXIT> key twice, and then press the <UP> key or <DOWN> key to select <YES>, and then press the <MENU> key to finish).

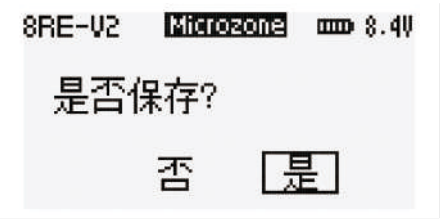

Restore Out:

All settings can be reset to go back to the original settings; Press the <UP> key or <DOWN> key to select <YES> and press the <MENU> key to finish.

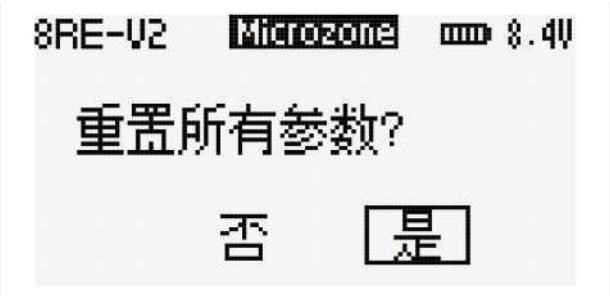

Model setting:

Press <MENU> on the main screen, press <UP> or <DOWN> to select Model Setup, then press <MENU> to enter Model Setup.

Fixed wing, multi-axis model settings

Car and boat model settings

Model selection:

From left to right are <FIXED WING> <MULTI-AXIS> <BOAT> <CAR>; Press <UP> or <DOWN> to select the appropriate option and press <MENU> to finish.

Mixed control setting:

Bind two or more channels of the receiver to one channel of the transmitter and perform linkage; the mixing settings differ depending on the model selected, and are categorized into two types: FIXED WING/ CAR/BOAT mixed control, and MULTI-AXIS mixed control; Press the <UP> or <DOWN> key to select the corresponding option, and then press the <MENU> key to complete the process.

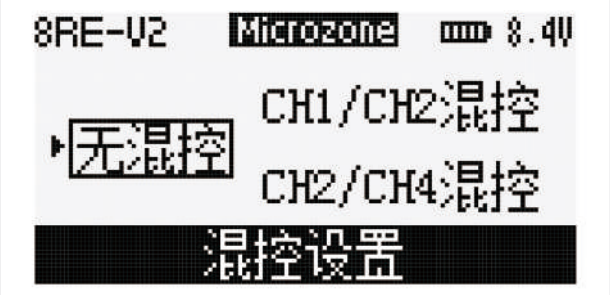

Fixed wing, car, boat mixed control

Multi-axis mixed control

Fixed wing, vehicle and boat mixed control:

CH1/CH2 mixed control: channel 1 and channel 2 mixed control;
CH2/CH4 mixed control: channel 2 and channel 4 mixed control.

Multi-axis hybrid control:

Combined with the D/R switch, it allows the aircraft to switch between three and six attitudes.

Channel reversal:

The operation direction of channels 1-8 can be reversed; Press <UP> key or <DOWN> key to select the corresponding option and press <MENU> key to finish.

Using Channel 1 as an example, when the blackened rectangle icon is on the left, toggling the rocker from left to right will cause the servo to swing from left to right (Fig. 1), and when the blackened rectangle icon is on the right, toggling the rocker from left to right will cause the servo to swing from right to left (Fig. 2).

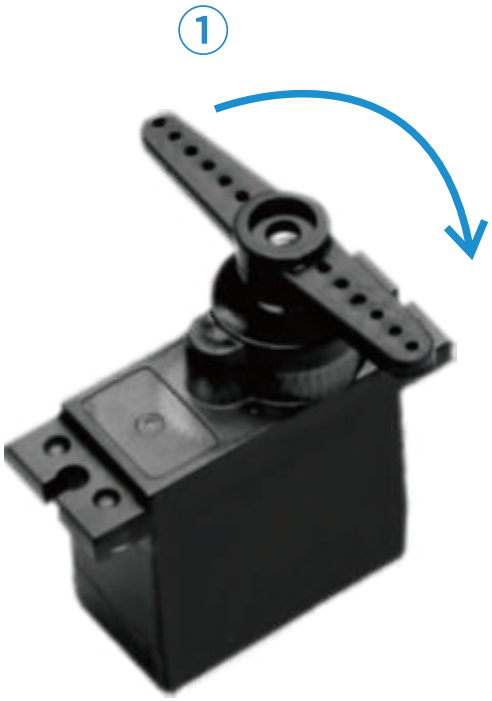

Car/boat mode speed lock:

When speed lock is turned on for cars or boats with differential construction, they will travel at the same speed without a change in speed; Press the <UP> key or <DOWN> key to select <ON>, press the <MENU> key to finish, and then toggle the speed lock switch, the speed lock indicator blinks to indicate it is on, and lights up long to indicate it is off.

Fixed wing/multi-axis mode coaching function:

A special function to provide training and guidance for beginners, it detects and corrects errors, provides skill suggestions and simulates various flight scenarios to help beginners gradually improve their flying skills in a safe and controlled environment; Press <UP> key or <DOWN> key to select <ON>, press <MENU> key to finish, then toggle the coach function switch, the coach function indicator light flashes for on, long light for off.

STANDARD CONFIGURATION LIST

Packaging box * 1, remote control * 1, receiver * 1;
Standard receiver: MC8RE-V2;
Compatible receivers: MC9002,MC6RE-V2,MC7RB-V2,MC3RB,MC4RB,MC6RE, MC7RB,MC8RE,E6R-E,M-BUS.

MATTERS NEEDING ATTENTION

Before starting to use the remote control, carefully read the following precautions!

1. This product is not a toy and is not suitable for children under the age of 12, Adults should keep this product out of reach of children and keep it out of reach of children Be careful when operating this product in the field.

2. Please do not use it in harsh weather conditions such as evenings, thunderstorms, snows, low energy levels, etc.

3. Do not use the remote control in snowy or watery places, if rainwater enters the remote control, the circuit will be short-circuited and cannot be used.

4.Signal interference may cause the remote control to go out of control,places where interference affects more than others are as follows:

A. Near the mobile phone signal transmission tower

B. Near high-voltage power lines and communication broadcasting antennas

C. Near the Military Radar Launch Tower

D. The complexity of wireless communication and the commercial path of mobile activities

E. Navigation domain

5. Please do not use this product after feeling tired, uncomfortable, drunk, or excited about drugs, otherwise it will cause serious injury to oneself or others The value of is.

6. The 2.4G line band is completely different from the low-frequency line radio band previously used, Please ensure that the model product is within your line of sight when using it Obstacles inside can block the signal from the power line, causing the remote control and model to lose control.

7. Before using it, it is necessary to ensure that the remote control and model are installed correctly, and that all steering gear actions and controls are in the same direction, otherwise it may cause damage to the model Severe damage to the engine.

8. When the remote control distance continues to be too far, there is a possibility of losing control, Please shorten the control distance appropriately; The battery voltage of the remote control is insufficient, transmitting The signal from the machine can cause loss of control; So when the remote control "POWER" flashes and there is an alarm, please replace the battery as soon as possible.

9. When stopping the remote control, be sure to cut off the power supply of the receiver and then turn off the remote control; If the power to the remote control is turned off first, the receiver will still be on Operation may cause the model to lose control or the engine to continue working, leading to serious accidents.

10.Improper use of the remote control may cause serious injury or even death to the operator or others; To ensure the safety of you, others, and equipment, please be careful Read this guide and follow the instructions.

11.The remote control and receiver required for our company's 2.4G wireless transmission system are used in pairs, while other company products cannot be connected to our company's products The product is of great value.