PERFECT WIRELESS EXPERIENCE

FG360-NA Hardware Guide

Version: Draft V1.0.2

Date: 2021-05-06

Applicability Type

NO.	Product Model	Description

Reproduction forbidden without Fibocom Wireless Inc. written authorization - All rights reserved.

Copyright

Copyright © 2021 Fibocom Wireless Inc. All rights reserved.

Without the prior written permission of the copyright holder, any company or individual is prohibited to excerpt, copy any part of or the entire document, or distribute the document in any form.

Notice

The document is subject to update from time to time owing to the product version upgrade or other reasons. Unless otherwise specified, the document only serves as the user guide. All the statements, information and suggestions contained in the document do not constitute any explicit or implicit guarantee.

Trademark

The trademark is registered and owned by Fibocom Wireless Inc.

Change History

Version	Author	Update Date	Remark
V1.0.2	Xu Shaofeng	2021-05-06	Section 2.1.1: update band information
V1.0.1	Xu Xialin	2021-04-22	Section 2.1.1: add weight information Section 2.3: Add section 2.3 antenna configuration Section 3.1: Update pin name of Pin 193,175,157,148,139,130 Section 4.1: Update module appearance Section 3.1: Add PCIe D as reserved and update pin name of Pin 3,265,38,39,41,44
V1.0.0	Peng Yujun Xu Xialin	2021-03-09	Initial version

Reproduction forbidden without Fibocom Wireless Inc. written authorization - All rights reserved.

Contents

1 Foreword 6
1.1 Introduction 6
2 Overview 6
2.1 Introduction 6
2.1.1 Key Features 6
2.2 Application Framework 9
2.3 Antenna Configuration 10
3 Pin Definition 16
3.1 Pin Map 16
3.1.1 Table of Pin No. and Pin Name 17
3.1.2 Pin Definition 19
4 Structural Specification 27
4.1 Product Appearance 27
4.2 Dimension of Structure 27
4.3 Storage 28
4.4 Packing 28

Reproduction forbidden without Fibocom Wireless Inc. written authorization - All rights reserved.

1 Foreword

1.1 Introduction

The document describes the electrical characteristics, RF performance, dimensions and application environment, etc. of FG360-NA (hereinafter referred to as FG360). With the assistance of the document and other instructions, the developers can quickly understand the hardware functions of FG360 modules and develop products.

2 Overview

2.1 Introduction

The FG360 series module is a 5G module which supports NSA and SA network architectures. The FG360 integrates core devices such as Baseband, Memory, PMU, Transceiver, and PA. It supports 5G NR Sub6, FDD-LTE, TDD-LTE, and WCDMA long-distance communication modes. Supports uplink 2×2 MIMO and downlink 4×4 MIMO multi-antenna configuration in SA mode. It also supports GNSS wireless positioning technology. The FG360 is designed in an LGA package and is suitable for a variety of eMBB scenarios, such as CPE, VR/AR, gateway, TV box, and intelligent monitoring.

2.1.1Key Features

Table 2-1 Key features

Performance	Description
Operating Band	LTE FDD: B2, B4, B5, B12,B66, B71
	LTE TDD: B41
	NR: n25, n41, n66, n71
	WCDMA/HSPA+: B2,B4,B5
GNSS	Support GPS, GLONASS, Galileo, BDS, QZSS
NR	3GPP Release 15
LTE	3GPP Release 15
UMTS	3GPP Release 8
Feature	NR: DL 4×4 MIMO: n25, n41, n66 UL 2×2MIMO: n41

Reproduction forbidden without Fibocom Wireless Inc. written authorization - All rights reserved.

	LTE: DL 4×4MIMO: B2, B4, B66	
	NSA and SA supported	
	SRS: n41, Support: 1T2R, 1T4R, 2T4R	
	HPUE: B41, ULCA B41C,n41	
Data Transmission	SA 5G/NR Sub-6 Peak	DL 4.67Gbps/UL 1.25Gbps
	NSA Peak	DL 3.74Gbps/UL 700Mbps
	LTE	DL 1.6Gbps (CAT19)/UL 211Mbps (CAT18)
	UMTS/HSPA+	DL UMTS: 384kbps/UL 384 kbps
		DL DC-HSPA+: 42 Mbps (CAT24)/UL 11.5Mbps (CAT7)
Power Supply	DC: 3.3~4.4V, typical voltage: 3.8V	
Antenna Type:	External	
Antenna Gain:	<3.76dBi	
Temperature	Normal operating temperature: -30~75℃[1] Extended operating temperature: -40~85℃[2] Storage temperature: -40~85℃	
Physical characteristics	Dimension: 41 mm×44mm×2.75 mm Package: 430 pin LGA Weight: about 12.0 g	
CPU	ARM Cortex-A55, quad core, up to 2.0 GHz	
Memory	2GB LPDDR4x+32GB eMMC Flash	
Interface		
USB Interface	USB2.0 high speed (HS) interface, data transmission rate up to 480Mbps USB3.0 Super-speed (SS) interface, data transmission rate up to 5Gbps	
PCIe Interface	PCIe Gen3 2Lane×1, PCIe Gen3 1Lane×2 (PCIe only support RC mode)	
SIM Interface	Dual SIM: 1.8V/3V SIM1: USIM SIM2: ESIM/USIM	
I2C	One set of I2C interface, data transmission rate up to 400Kbit/s	
ADCs	A/D conversion channel, Voltage Range: 0~1.45V	
Software		
Firmware update	USB/PCIe/FOTA	
Operating System	Linux/Android/Windows	

Reproduction forbidden without Fibocom Wireless Inc. written authorization - All rights reserved.

Note:

1. When temperature keeps in the range of -30~75°C, the module can work normally. Module performance meets the 3GPP specifications.
2. When temperature keeps in the range of -40~85°C, module performance may be slightly out of 3GPP specifications.

Reproduction forbidden without Fibocom Wireless Inc. written authorization - All rights reserved.

2.2 Application Framework

The application framework below shows the main hardware functions of the FG360 module:

- Baseband
- RF transceiver
- PMU
- Memory
- Peripheral interface

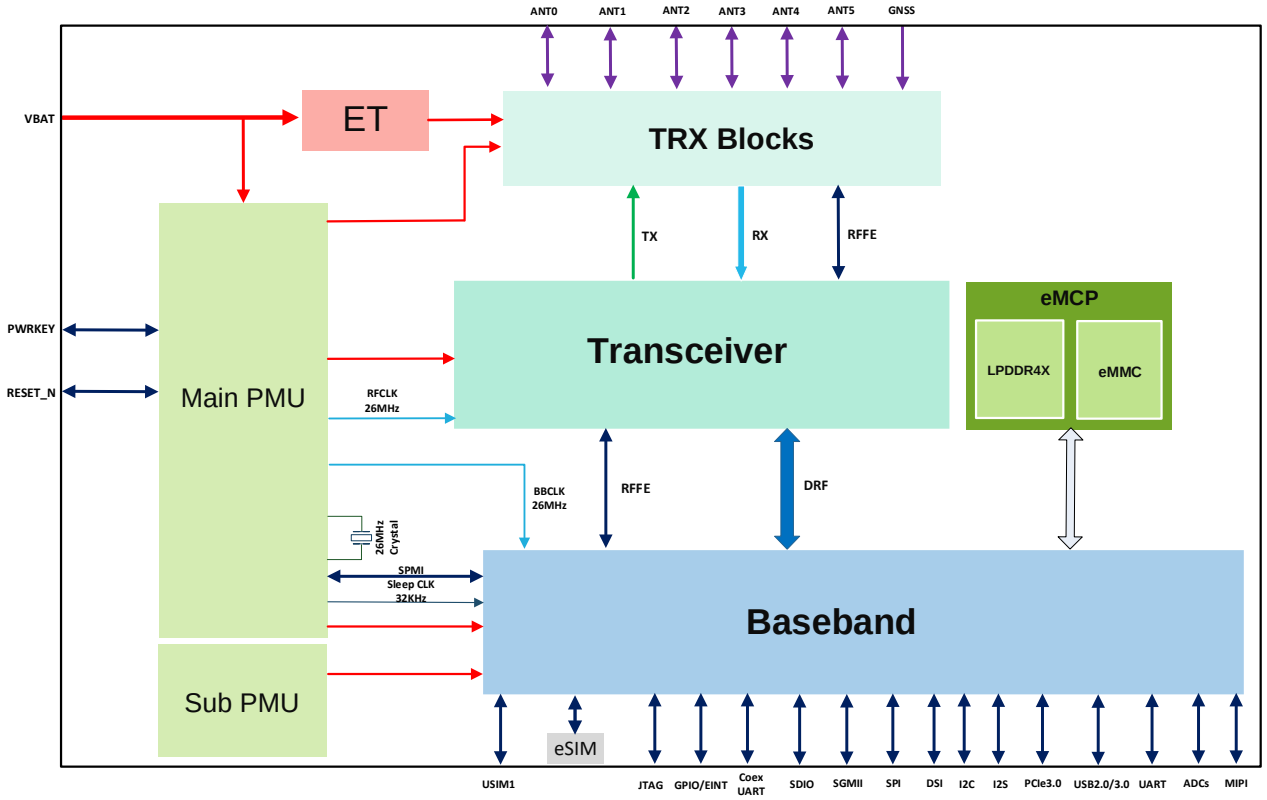

Figure 2-1 Hardware block diagram

Reproduction forbidden without Fibocom Wireless Inc. written authorization - All rights reserved.

2.3 Antenna Configuration

FG360 module supports seven antennas and the configuration is as below table:

PAD	Function Description	Band Configuration(TX)	Band Configuration(RX)	Frequency Range(MHz)
130	LMHB TRX	B2/4/5/12/41/66/71 N25/41/66/71	B2/4/5/12/41/66/71 N25/41/66/71	617~2690
175	41TRx+MHB/UCB/ LAA Rx	B41 n41	B2/4/5/12/41/66/71 N25/41/66/71	1710~5925
157	MHB/UCB/LAA Rx	Only SRS	B2/4/41/66 n25/41/66	1930~5925
139	LMHB Rx	Only SRS	B2/4/5/12/41/66/71 N25/41/66/71	617~2690
148	Reserved			
193	Reserved			
199	GNSS		GNSS receive	

2.4 Waring

2.4.1 Important Notice to OEM integrators

1. This module is limited to OEM installation ONLY.

2. This module is limited to installation in fixed applications, according to Part 2.1091(b).

3. The separate approval is required for all other operating configurations, including portable configurations with respect to Part 2.1093 and different antenna configurations

4. For FCC Part 15.31 (h) and (k): The host manufacturer is responsible for additional testing to verify compliance as a composite system. When testing the host device for compliance with Part 15 Subpart B, the host manufacturer is required to show compliance with Part 15 Subpart B while the transmitter module(s) are installed and operating. The modules should be transmitting and the evaluation should confirm that the module's intentional emissions are compliant (i.e. fundamental and out of band emissions). The host manufacturer must verify that there are no additional unintentional emissions other than what is permitted in Part 15 Subpart B or emissions are complaint with the transmitter(s) rule(s). The Grantee will provide guidance to the host manufacturer for Part 15 B requirements if needed.

Reproduction forbidden without Fibocom Wireless Inc. written authorization - All rights reserved.

Important Note

notice that any deviation(s) from the defined parameters of the antenna trace, as described by the instructions, require that the host product manufacturer must notify to Fibocom Wireless Inc. that they wish to change

the antenna trace design. In this case, a Class II permissive change application is required to be filed by the USI, or the host manufacturer can take responsibility through the change in FCC ID (new application) procedure followed by a Class II permissive change application.

End Product Labeling

When the module is installed in the host device, the FCC/IC ID label must be visible through a window on the final device or it must be visible when an access panel, door or cover is easily re-moved. If not, a second label must be placed on the outside of the final device that contains the following text:

“Contains FCC ID: ZMOFG360NA03”

“Contains IC: 21374-FG360NA03 “

The FCC ID/IC ID can be used only when all FCC/IC compliance requirements are met.

Antenna Installation

(1) The antenna must be installed such that **20** cm is maintained between the antenna and users,

(2) The transmitter module may not be co-located with any other transmitter or antenna.

(3) Only antennas of the same type and with equal or less gains as shown below may be used with this module. Other types of antennas and/or higher gain antennas may require additional authorization for operation.

(4)The max allowed antenna gain is 3.76dBi for external monopole antenna.

In the event that these conditions cannot be met (for example certain laptop configurations or co-location with another transmitter), then the FCC/IC authorization is no longer considered valid and the FCC ID/IC ID cannot be used on the final product. In these circumstances, the OEM integrator will be responsible for re-evaluating the end product (including the transmitter) and obtaining a separate FCC/IC authorization.

Manual Information to the End User

The OEM integrator has to be aware not to provide information to the end user regarding how to install or remove this RF module in the user’s manual of the end product which integrates this module. The end user manual shall include all required regulatory information/warning as show in this manual.

Reproduction forbidden without Fibocom Wireless Inc. written authorization - All rights reserved.

2.4.2 FCC Statement

Federal Communication Commission Interference Statement

This device complies with Part 15 of the FCC Rules. Operation is subject to the following two conditions: (1) This device may not cause harmful interference, and (2) this device must accept any interference received, including interference that may cause undesired operation.

This equipment has been tested and found to comply with the limits for a Class B digital device, pursuant to Part 15 of the FCC Rules. These limits are designed to provide reasonable protection against harmful interference in a residential installation. This equipment generates, uses and can radiate radio frequency energy and, if not installed and used in accordance with the instructions, may cause harmful interference to radio communications. However, there is no guarantee that interference will not occur in a particular installation. If this equipment does cause harmful interference to radio or television reception, which can be determined by turning the equipment off and on, the user is encouraged to try to correct the interference by one of the following measures:

- Reorient or relocate the receiving antenna.
- Increase the separation between the equipment and receiver.
- Connect the equipment into an outlet on a circuit different from that to which the receiver is connected.
- Consult the dealer or an experienced radio/TV technician for help.

Any changes or modifications not expressly approved by the party responsible for compliance could void the user's authority to operate this equipment. This transmitter must not be co-located or operating in conjunction with any other antenna or transmitter.

This device is intended only for OEM integrators under the following conditions: (For module device use)

1) The antenna must be installed such that 20 cm is maintained between the antenna and users, and

2) The transmitter module may not be co-located with any other transmitter or antenna.

As long as 2 conditions above are met, further transmitter test will not be required. However, the OEM integrator is still responsible for testing their end-product for any additional compliance requirements required with this module installed.

Radiation Exposure Statement

This equipment complies with FCC radiation exposure limits set forth for an uncontrolled environment. This equipment should be installed and operated with minimum distance **20** cm between the radiator & your body.

Reproduction forbidden without Fibocom Wireless Inc. written authorization - All rights reserved.

2.4.3 IC Statement

Industry Canada Statement

This device complies with Industry Canada's licence-exempt RSSs. Operation is subject to the following two conditions:

(1) This device may not cause interference; and

(2) This device must accept any interference, including interference that may cause undesired operation of the device.

Le présent appareil est conforme aux CNR d'Industrie Canada applicables aux appareils radio exempts de licence. L'exploitation est autorisée aux deux conditions suivantes:

(1) l'appareil ne doit pas produire de brouillage, et

(2) l'utilisateur de l'appareil doit accepter tout brouillage radioélectrique subi, même si le brouillage est susceptible d'en compromettre le fonctionnement."

Radiation Exposure Statement

This equipment complies with IC radiation exposure limits set forth for an uncontrolled environment. This equipment should be installed and operated with minimum distance 20 cm between the radiator & your body.

Déclaration d'exposition aux radiations:

Cet équipement est conforme aux limites d'exposition aux rayonnements ISED établies pour un environnement non contrôlé. Cet équipement doit être installé et utilisé avec un minimum de 20 cm de distance entre la source de rayonnement et votre corps.

This device is intended only for OEM integrators under the following conditions: (For module device use)

1) The antenna must be installed such that 20 cm is maintained between the antenna and users, and

2) The transmitter module may not be co-located with any other transmitter or antenna.

As long as 2 conditions above are met, further transmitter test will not be required. However, the OEM integrator is still responsible for testing their end-product for any additional compliance requirements required with this module installed.

Cet appareil est conçu uniquement pour les intégrateurs OEM dans les conditions suivantes: (Pour utilisation de dispositif module)

Reproduction forbidden without Fibocom Wireless Inc. written authorization - All rights reserved.

1) L'antenne doit être installée de telle sorte qu'une distance de 20 cm est respectée entre l'antenne et les utilisateurs, et
2) Le module émetteur peut ne pas être coïmplanté avec un autre émetteur ou antenne.

Tant que les 2 conditions ci-dessus sont remplies, des essais supplémentaires sur l'émetteur ne seront pas nécessaires. Toutefois, l'intégrateur OEM est toujours responsable des essais sur son produit final pour toutes exigences de conformité supplémentaires requis pour ce module installé.

IMPORTANT NOTE:

In the event that these conditions can not be met (for example certain laptop configurations or colocation with another transmitter), then the Canada authorization is no longer considered valid and the IC ID can not be used on the final product. In these circumstances, the OEM integrator will be responsible for re-evaluating the end product (including the transmitter) and obtaining a separate Canada authorization.

NOTE IMPORTANTE:

Dans le cas où ces conditions ne peuvent être satisfaites (par exemple pour certaines configurations d'ordinateur portable ou de certaines co-localisation avec un autre émetteur), l'autorisation du Canada n'est plus considéré comme valide et l'ID IC ne peut pas être utilisé sur le produit final. Dans ces circonstances, l'intégrateur OEM sera chargé de réévaluer le produit final (y compris l'émetteur) et l'obtention d'une autorisation distincte au Canada.

End Product Labeling

This transmitter module is authorized only for use in device where the antenna may be installed such that 20 cm may be maintained between the antenna and users. The final end product must be labeled in a visible area with the following: “Contains IC: 21374-FG360NA”.

Plaque signalétique du produit final

Ce module émetteur est autorisé uniquement pour une utilisation dans un dispositif où l'antenne peut être installée de telle sorte qu'une distance de 20cm peut être maintenue entre l'antenne et les utilisateurs. Le produit final doit être étiqueté dans un endroit visible avec l'inscription suivante: "Contient des IC: 21374-FG360NA ".

Manual Information To the End User

The OEM integrator has to be aware not to provide information to the end user regarding how to

Reproduction forbidden without Fibocom Wireless Inc. written authorization - All rights reserved.

install or remove this RF module in the user’s manual of the end product which integrates this module.

The end user manual shall include all required regulatory information/warning as show in this manual.

Manuel d'information à l'utilisateur final

L'intégrateur OEM doit être conscient de ne pas fournir des informations à l'utilisateur final quant à la façon d'installer ou de supprimer ce module RF dans le manuel de l'utilisateur du produit final qui intègre ce module.

Le manuel de l'utilisateur final doit inclure toutes les informations réglementaires requises et avertissements comme indiqué dans ce manuel.

Reproduction forbidden without Fibocom Wireless Inc. written authorization - All rights reserved.

3 Pin Definition

The FG360 module applies LGA interface with 430 pins.

3.1 Pin Map

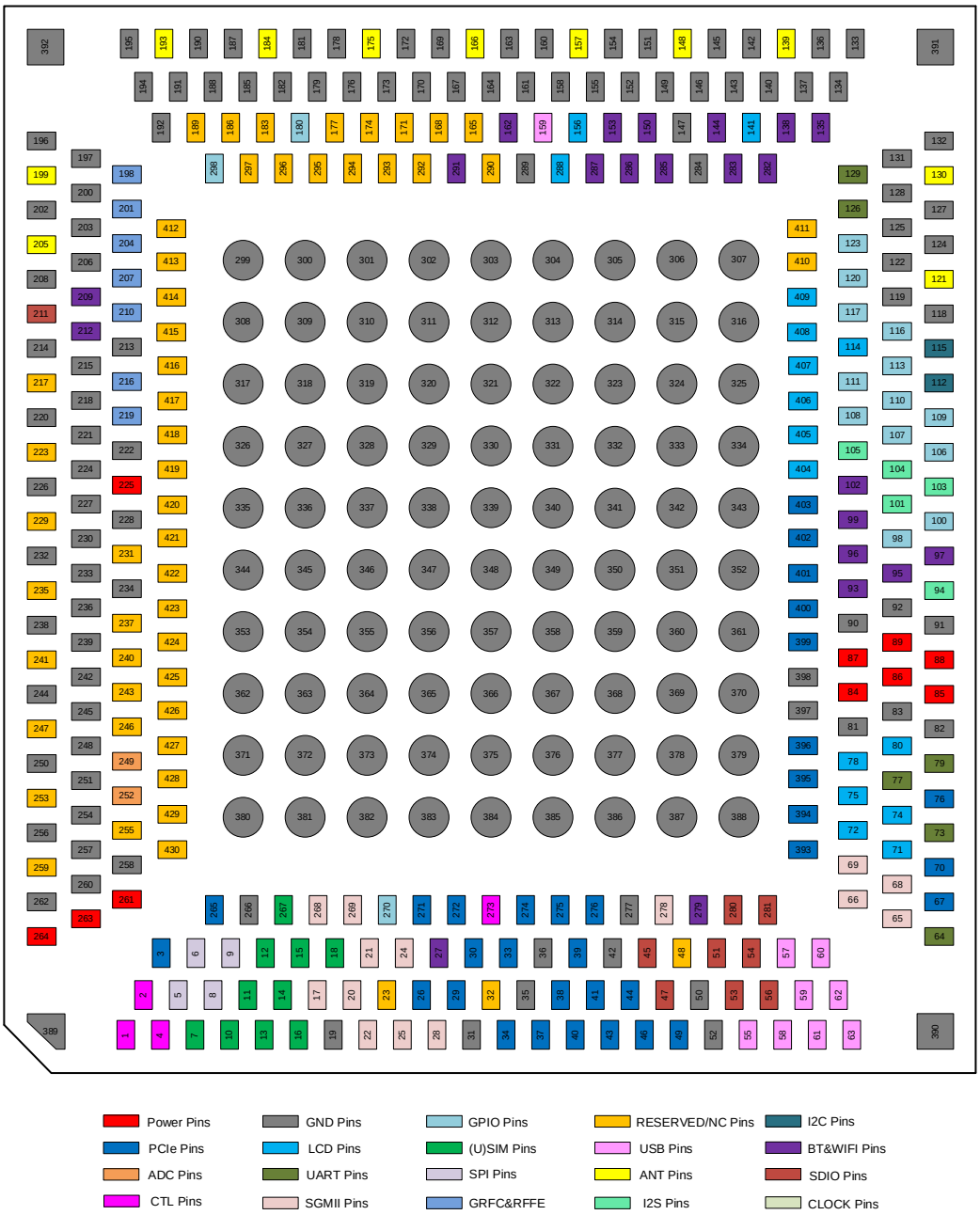

Figure 3-1 Pin map

Note:

The pin "RESERVED" means that the position pin is reserved and does not need to be connected.

Reproduction forbidden without Fibocom Wireless Inc. written authorization - All rights reserved.

3.1.1 Table of Pin No. and Pin Name

Table 3-1 Table of pin no. and pin name

No.	PIN Name	No.	PIN Name	No.	PIN Name	No.	PIN Name	No.	PIN Name
1	PWRKEY	2	PON_1	3	CLK_OUT	4	SYS_RESIN_N	5	SPI0_MISO
6	SPI0_CSB	7	SIM1_VDD	8	SPI0_MOSI	9	SPI0_CLK	10	SIM1_DATA
11	SIM2_RST	12	SIM2_DATA	13	SIM1_CLK	14	SIM1_DET	15	SIM2_CLK
16	SIM1_RST	17	SGMII_1_TXN	18	SIM2_VDD	19	GND	20	SGMII_1_TXP
21	SGMII_0_TXP	22	SGMII_1_RXN	23	RESERVED	24	SGMII_0_TXN	25	SGMII_1_RXP
26	PCIE_B_LN0_TXN	27	EINT17	28	GBE0_RST	29	PCIE_B_LN0_TXP	30	PCIE_B_LN0_RXP
31	GND	32	RESERVED	33	PCIE_B_LN0_RXN	34	PCIE_A_CLKN	35~36	GND
37	PCIE_A_CLKP	38	PCIE_D_LN0_TXP	39	PCIE_D_LN0_TXN	40	PCIE_A_LN0_TXN	41	PCIE_D_LN0_RXP
42	GND	43	PCIE_A_LN0_TXP	44	PCIE_D_LN0_RXN	45	SDC_CLK	46	PCIE_A_LN0_RXN
47	SDC_CMD	48	RESERVED	49	PCIE_A_LN0_RXP	50	GND	51	SDC_DATA2
52	GND	53	SDC_DATA1	54	SDC_DATA3	55	SSUSB_TXN	56	SDC_DATA0
57	VBUS_DET	58	SSUSB_TXP	59	USB_DM	60	USB_ID	61	SSUSB_RXN
62	USB_DP	63	SSUSB_RXP	64	AP_URTS1	65	GBE1_INT	66	MDC
67	PCIE_B_PEWAKEN	68	G3BE1_RST	69	MDIO	70	PCIE_B_CLKREQN	71	LSCE0B
72	LSDA	73	AP_URXD1	74	LSDI	75	LSA0	76	PCIE_B_PERSTN
77	AP_UTXD1	78	LRSTB	79	AP_UCTS1	80	LSCK	81~83	GND
84~89	VBAT_RF	90~92	GND	93	PCM0_SYNC	94	I2S0_MCK	95	PCM0_DI
96	PCM0_CLK	97	PCM0_DO	98	CDC_RESET_N	99	PTA_TX	100	CDC_INT1_N
101	I2S0_BCK	102	PTA_RX	103	I2S0_DO	104	I2S0_DI	105	I2S0_LRCK
106	NET_STATUS	107	AUDIO_PWR_EN	108	STATUS	109	W_DISABLE	110	NET_MODE
111	SLEEP_IND	112	I2C_SCL0	113	WAKEUP_IN	114	ISINK1	115	I2C_SDA0
116	ANTCTL3	117	IRIG_B	118~119	GND	120	GPS_PPS	121	NC
122	GND	123	EINT20	124~125	GND	126	DBG_UART_RX	127~128	GND
129	DBG_UART_TX	130	ANT8_M	131~134	GND	135	BT_UTXD	136~137	GND
138	BT_URXD	139	ANT7_D	140	GND	141	DSI_TE	142~143	GND
144	EINT16	145~147	GND	148	ANT6	149	GND	150	BT_PRI_RXD
151~152	GND	153	BT_ACT_TXD	154~155	GND	156	DISP_PWM	157	ANT5_M2
158	GND	159	USB_DRVBUS	160~161	GND	162	GPIO78/ PCIE_D_CLKREQN	163~164	GND

Reproduction forbidden without Fibocom Wireless Inc. written authorization - All rights reserved.

No.	PIN Name	No.	PIN Name	No.	PIN Name	No.	PIN Name	No.	PIN Name
165	NC	166	NC	167	GND	168	NC	169~170	GND
171	NC	172~173	GND	174	NC	175	ANT3_M1	176	GND
177	NC	178~179	GND	180	LCD_PWR_EN2	181~182	GND	183	TDI
184	NC	185	GND	186	TCK	187~188	GND	189	TDO
190~192	GND	193	ANT1	194~197	GND	198	MIPI1_D_SDATA	199	ANT10_GNSS
200	GND	201	MIPI1_D_SCLK	202~203	GND	204	ANTCTL2	205	NC
206	GND	207	ANTCTL1	208	GND	209	GPIO76/ PCIE_D_PERSTN	210	ANTCTL0
211	SDIO_VDD	212	EINT15	213~215	GND	216	MIPI2_D_SDATA	217	RESERVED
218	GND	219	MIPI2_D_SCLK	220~222	GND	223	RESERVED	224	GND
225	VDD_EXT_1V8	226~228	GND	229	RESERVED	230	GND	231	NC
232~234	GND	235	RESERVED	236	GND	237	RESERVED	238~239	GND
240~241	RESERVED	242	GND	243	RESERVED	244~245	GND	246~247	RESERVED
248	GND	249	ADC0	250~251	GND	252	ADC1	253	RESERVED
254	GND	255	NC	256~258	GND	259	RESERVED	260	GND
261	VBAT_BB	262	GND	263~264	VBAT_BB	265	PCIE_D_CLKN	266	GND
267	SIM2_DET	268	SGMII_0_RXP	269	SGMII_0_RXN	270	SGMII_PWR_EN1	271	PCIE_B_CLKP
272	PCIE_B_CLKN	273	USB_BOOT	274	PCIE_A_PEWAKEN	275	PCIE_A_PERSTN	276	PCIE_A_CLKREQN
277	GND	278	GBE0_INT	279	EINT18	280	SDC_DET	281	SD_PWR_EN
282	BT_URTS	283	BT_UCTS	284	GND	285	GPIO77/ PCIE_D_PEWAKEN	286	WIFI_GPIO1
287	WLAN_ACT	288	LCM_RST	289	GND	290	NC	291	WIFI_GPIO2
292	NC	293	RESERVED	294	NC	295	TRST_N	296	TMS
297	SYSRSTB	298	LCD_PWR_EN1	299~392	GND	393	PCIE_C_LN0_RXN	394	PCIE_C_LN0_RXP
395	PCIE_C_LN0_TXP	396	PCIE_C_LN0_TXN	397~398	GND	399	PCIE_C_CLKP	400	PCIE_C_CLKN
401	PCIE_C_PERSTN	402	PCIE_C_CLKREQN	403	PCIE_C_PEWAKEN	404	DSI0_D0P	405	DSI0_D0N
406	DSI0_CKN	407	DSI0_CKP	408	DSI0_D1N	409	DSI0_D1P	410~425	NC
426	RESERVED	427	RESERVED	428	RESERVED	429	RESERVED	430	RESERVED

Reproduction forbidden without Fibocom Wireless Inc. written authorization - All rights reserved.

3.1.2 Pin Definition

Table 3-2 IO Parameter definition

Type	Description
PI	Power Input
PO	Power Output
DI	Digital Input
DO	Digital Output
DIO	Digital Input/Output
AI	Analog Input
AO	Analog Output
AIO	Analog Input/Output
OD	Open Drain
PU	Internal pull up
PD	Internal pull down
Hi-Z	High impedance

Table 3-3 LGA pin description

Pin Name	Pin No.	Type	Power Domain	Reset Value	Pin Description
Power					
VBAT_BB	261 263, 264	PI	-	-	Baseband power input
VBAT_RF	84, 85, 86, 87, 88, 89	PI	-	-	RF power input
VDD_EXT_1V8	225	PO	-	-	1.8V power output
USB					
SSUSB_TXN	55	AO	-	-	USB super speed transmit data minus
SSUSB_TXP	58	AO	-	-	USB super speed transmit data plus
SSUSB_RXN	61	AI	-	-	USB super speed receive data minus
SSUSB_RXP	63	AI	-	-	USB super speed receive data plus
USB_DM	59	AIO	-	-	USB high speed data minus
USB_DP	62	AIO	-	-	USB high speed data plus
VBUS_DET	57	DI	-	-	USB VBUS detection
USB_DRVBUS	159	DO	VDD_EXT_1V8	PD	USB OTG power enable
USB_ID	60	DI	VDD_EXT_1V8	PD	USB ID
USIM					

Reproduction forbidden without Fibocom Wireless Inc. written authorization - All rights reserved.

Pin Name	Pin No.	Type	Power Domain	Reset Value	Pin Description
SIM1_VDD	7	PO	-	-	SIM1 power supply,3V/1.8V
SIM1_DATA	10	DIO	SIM1_VDD	PD	SIM1 data input/output
SIM1_CLK	13	DO	SIM1_VDD	PD	SIM1 clock signal
SIM1_RST	16	DO	SIM1_VDD	PD	SIM1 reset signal
SIM1_DET	14	DI	VDD_EXT_1V8	PD	SIM1 detect signal
SIM2_VDD	18	PO	-	-	SIM2 power supply,3V/1.8V, Reserved
SIM2_DATA	12	DIO	SIM2_VDD	PD	SIM2 data input/output, Reserved
SIM2_CLK	15	DO	SIM2_VDD	PD	SIM2 clock signal, Reserved
SIM2_RST	11	DO	SIM2_VDD	PD	SIM2 reset signal, Reserved
SIM2_DET	267	DI	VDD_EXT_1V8	PD	SIM2 detect, Reserved
GPIO					
W_DISABLE	109	DI	VDD_EXT_1V8	PD	Module airplane mode control signal
WAKEUP_IN	113	DI	VDD_EXT_1V8	PD	Module wake up input from host
NET_STATUS	106	DO	VDD_EXT_1V8	PD	Module network status indication
NET_MODE	110	DO	VDD_EXT_1V8	PD	Module network mode indication
SLEEP_IND	111	DO	VDD_EXT_1V8	PD	Module output to wake up host
STATUS	108	DO	VDD_EXT_1V8	PD	Module current working status indication
IRIG_B	117	DO	VDD_EXT_1V8	PD	B code output
GPS_PPS	120	DO	VDD_EXT_1V8	PD	PPS signal output
ISINK1	114	AI	VBAT_BB	HI-Z	LED negative drive signal
ANT					
ANT1	193	AIO	-	-	UCB TRx
NC	184	AIO	-	-	NC
ANT3_M1	175	AIO	-	-	41 TRx + MHB/UCB/LAA Rx
NC	166	AIO	-	-	NC
ANT5_M2	157	AIO	-	-	MHB/UCB/LAA Rx
ANT6	148	AIO	-	-	UCB TRx
ANT7_D	139	AIO	-	-	LMHB Rx
ANT8_M	130	AIO	-	-	LMH TRX
NC	121	AIO	-	-	NC
ANT10_GNSS	199	AI	-	-	GNSS antenna
NC	205	AIO	-	-	NC
ANT Tuner Control					
MIPI1_D_SDATA	198	DIO	VDD_EXT_1V8	PD	External Tuner MIPI Control Data Pin
MIPI1_D_SCLK	201	DO	VDD_EXT_1V8	PD	External Tuner MIPI Control Clock Pin
MIPI2_D_SDATA	216	DIO	VDD_EXT_1V8	PD	External Tuner MIPI Control Data Pin

Reproduction forbidden without Fibocom Wireless Inc. written authorization - All rights reserved.

Pin Name	Pin No.	Type	Power Domain	Reset Value	Pin Description
MIPI2_D_SCLK	219	DO	VDD_EXT_1V8	PD	External Tuner MIPI Control Clock Pin
ANTCTL0	210	DO	1.8V	PD	Antenna control signal 0
ANTCTL1	207	DO	1.8V	PD	Antenna control signal 1
ANTCTL2	204	DO	1.8V	PD	Antenna control signal 2
ANTCTL3	116	DO	1.8V	PD	Antenna control signal 3
Module Control					
PWRKEY	1	DI	1.8V	PU	Module power-key control signal
SYS_RESIN_N	4	DI	1.8V	PU	Module reset control signal
PON_1	2	DI	≤VBAT_BB	PU	Module power on signal
EINT20	123	DI	VDD_EXT_1V8	PD	MT6890 interruput input signal, used for WPS key input signal
USB_BOOT	273	DI	VDD_EXT_1V8	PD	Force into USB download boot mode
SD					
SDC_CMD	47	DIO	SDIO_VDD	PD	SDC interface command signal
SDC_DATA1	53	DIO	SDIO_VDD	PD	SDC interface DATA1 signal
SDC_DATA0	56	DIO	SDIO_VDD	PD	SDC interface DATA0 signal
SDC_CLK	45	DO	SDIO_VDD	PD	SDC interface clock signal
SDC_DATA2	51	DIO	SDIO_VDD	PD	SDC interface DATA2 signal
SDC_DATA3	54	DIO	SDIO_VDD	PD	SDC interface DATA3 signal
SDC_DET	280	DI	VDD_EXT_1V8	PD	SD card insert detection
SD_PWR_EN	281	DO	VDD_EXT_1V8	PD	SD card power supply enable
SDIO_VDD	211	PO	-	-	SDC interface I/O power domain
SGMII					
SGMII_1_RXN	22	AIO	AVDD12_SGMII	-	SGMII 1 receive data minus
SGMII_1_RXP	25	AIO	AVDD12_SGMII	-	SGMII 1 receive data plus
SGMII_1_TXN	17	AIO	AVDD12_SGMII	-	SGMII 1 transmit data minus
SGMII_1_TXP	20	AIO	AVDD12_SGMII	-	SGMII 1 transmit data plus
GBE1_INT	65	DI	VDD_EXT_1V8	PD	SGMII 1 interrupt input signal
GBE1_RST	68	DO	VDD_EXT_1V8	PD	SGMII 1 reset signal
SGMII_0_RXN	269	AIO	AVDD12_SGMII	-	SGMII 0 receive data minus
SGMII_0_RXP	268	AIO	AVDD12_SGMII	-	SGMII 0 receive data plus
SGMII_0_TXN	24	AIO	AVDD12_SGMII	-	SGMII 0 transmit data minus
SGMII_0_TXP	21	AIO	AVDD12_SGMII	-	SGMII 0 transmit data plus

Reproduction forbidden without Fibocom Wireless Inc. written authorization - All rights reserved.

Pin Name	Pin No.	Type	Power Domain	Reset Value	Pin Description
GBE0_INT	278	DI	VDD_EXT_1V8	PD	SGMII 0 interrupt input signal
GBE0_RST	28	DO	VDD_EXT_1V8	PD	SGMII 0 reset signal
SGMII_PWR_EN1	270	DO	VDD_EXT_1V8	PD	SGMII power supply enable 1
MDIO	69	DIO	VDD_EXT_1V8	PD	SGMII MDIO signal
MDC	66	DO	VDD_EXT_1V8	PD	SGMII MDC signal
PCIE					
PCIE_A_CLKN	34	AIO	AVDD12_PCIE	-	PCIe A reference clock minus
PCIE_A_CLKP	37	AIO	AVDD12_PCIE	-	PCIe A reference clock plus
PCIE_A_LN0_TXN	40	AIO	AVDD12_PCIE	-	PCIe A Tx0 minus
PCIE_A_LN0_TXP	43	AIO	AVDD12_PCIE	-	PCIe A Tx0 plus
PCIE_A_LN0_RXN	46	AIO	AVDD12_PCIE	-	PCIe A Rx0 minus
PCIE_A_LN0_RXP	49	AIO	AVDD12_PCIE	-	PCIe A Rx0 plus
PCIE_A_PEWAKEN	274	DI	VDD_EXT_1V8	PU	PCIe A wake-up signal
PCIE_A_PERSTN	275	DO	VDD_EXT_1V8	PU	PCIe A reset signal
PCIE_A_CLKREQN	276	DIO	VDD_EXT_1V8	PU	PCIe A clock request signal
PCIE_B_CLKN	272	AIO	AVDD12_PCIE	-	PCIe B reference clock minus
PCIE_B_CLKP	271	AIO	AVDD12_PCIE	-	PCIe B reference clock plus
PCIE_B_LN0_TXN	26	AIO	AVDD12_PCIE	-	PCIe B Tx0 minus
PCIE_B_LN0_TXP	29	AIO	AVDD12_PCIE	-	PCIe B Tx0 plus
PCIE_B_LN0_RXN	33	AIO	AVDD12_PCIE	-	PCIe B Rx0 minus
PCIE_B_LN0_RXP	30	AIO	AVDD12_PCIE	-	PCIe B Rx0 plus
PCIE_B_PEWAKEN	67	DI	VDD_EXT_1V8	PU	PCIe B wake-up signal
PCIE_B_PERSTN	76	DO	VDD_EXT_1V8	PU	PCIe B reset signal
PCIE_B_CLKREQN	70	DIO	VDD_EXT_1V8	PU	PCIe B clock request signal
PCIE_C_CLKN	400	AIO	AVDD12_PCIE	-	PCIe C reference clock minus
PCIE_C_CLKP	399	AIO	AVDD12_PCIE	-	PCIe C reference clock plus
PCIE_C_LN0_TXN	396	AIO	AVDD12_PCIE	-	PCIe C Tx0 minus
PCIE_C_LN0_TXP	395	AIO	AVDD12_PCIE	-	PCIe CTx0 plus
PCIE_C_LN0_RXN	393	AIO	AVDD12_PCIE	-	PCIe C Rx0 minus
PCIE_C_LN0_RXP	394	AIO	AVDD12_PCIE	-	PCIe C Rx0 plus
PCIE_C_PEWAKEN	403	DI	VDD_EXT_1V8	PU	PCIe C wake-up signal
PCIE_C_PERSTN	401	DO	VDD_EXT_1V8	PU	PCIe C reset signal
PCIE_C_CLKREQN	402	DIO	VDD_EXT_1V8	PU	PCIe C clock request signal
PCIE_D_CLKN	3	AIO	AVDD12_PCIE	-	PCIe D reference clock minus, Reserved
PCIE_D_CLKP	265	AIO	AVDD12_PCIE	-	PCIe D reference clock plus, Reserved
PCIE_D_LN0_TXN	39	AIO	AVDD12_PCIE	-	PCIe D Tx0 minus, Reserved
PCIE_D_LN0_TXP	38	AIO	AVDD12_PCIE	-	PCIe D Tx0 plus, Reserved
PCIE_D_LN0_RXN	44	AIO	AVDD12_PCIE	-	PCIe D Rx0 minus, Reserved
PCIE_D_LN0_RXP	41	AIO	AVDD12_PCIE	-	PCIe D Rx0 plus, Reserved
GPIO76/ PCIE_D_PERSTN	209	DI	VDD_EXT_1V8	PD	MT6890 GPIO, used for 2+2+4 and 4+4+4 WIFI/BT and RF co-exist control signals
GPIO77/ PCIE_D_PEWAKEN	285	DO	VDD_EXT_1V8	PD	MT6890 GPIO, used for 2+2+4 and 4+4+4 WIFI/BT

Reproduction forbidden without Fibocom Wireless Inc. written authorization - All rights reserved.

Pin Name	Pin No.	Type	Power Domain	Reset Value	Pin Description
					and RF co-exist control signals
GPIO78/ PCIE_D_CLKREQN	162	DO	VDD_EXT_1V8	PD	MT6890 GPIO, used for 2+2+4 and 4+4+4 WIFI/BT and RF co-exist control signals
JTAG					
TDI	183	DI	VDD_EXT_1V8	PD	JTAG TDI，Reserved
TCK	186	DI	VDD_EXT_1V8	PD	JTAG TCK，Reserved
TDO	189	DO	VDD_EXT_1V8	PD	JTAG TDO，Reserved
TRST_N	295	DI	VDD_EXT_1V8	PD	JTAG TRST，Reserved
TMS	296	DI	VDD_EXT_1V8	PD	JTAG TMS，Reserved
SYSRSTB	297	DI	VDD_EXT_1V8	PD	System reset，Reserved
I2C					
I2C_SDA0	115	DIO	VDD_EXT_1V8	PU	I2C data
I2C_SCL0	112	DO	VDD_EXT_1V8	PU	I2C clock
I2S					
I2S0_DO	103	DO	VDD_EXT_1V8	PD	I2S data output signal
I2S0_MCK	94	DO	VDD_EXT_1V8	PD	I2S clock output signal
I2S0_DI	104	DI	VDD_EXT_1V8	PD	I2S data input signal
I2S0_BCK	101	DO	VDD_EXT_1V8	PD	I2S data bit clock signal
I2S0_LRCK	105	DO	VDD_EXT_1V8	PD	I2S frame clock signal
ADC					
ADC0	249	AI	VDD_EXT_1V8	-	A/D conversion channel 0
ADC1	252	AI	VDD_EXT_1V8	-	A/D conversion channel 1
Debug UART					
DBG_UART_TX	129	DO	VDD_EXT_1V8	PU	Debug UART data transmission
DBG_UART_RX	126	DI	VDD_EXT_1V8	PU	Debug UART data reception
UART					
AP_UCTS1	79	DI	VDD_EXT_1V8	PD	UART receive ready signal
AP_URTS1	64	DO	VDD_EXT_1V8	PD	UART transmit request signal
AP_UTXD1	77	DO	VDD_EXT_1V8	PD	UART transmit signal
AP_URXD1	73	DI	VDD_EXT_1V8	PD	UART receive signal
SPI					
SPI0_MISO	5	DI	VDD_EXT_1V8	PD	SPI interface input signal
SPI0_MOSI	8	DO	VDD_EXT_1V8	PD	SPI interface output signal
SPI0_CSB	6	DO	VDD_EXT_1V8	PD	SPI interface chip select signal
SPI0_CLK	9	DO	VDD_EXT_1V8	PD	SPI interface clock signal
AUDIO CODEC					
CDC_RESET_N	98	DO	VDD_EXT_1V8	PD	External CODEC reset signal
CDC_INT1_N	100	DI	VDD_EXT_1V8	PD	External CODEC interrupt signal

Reproduction forbidden without Fibocom Wireless Inc. written authorization - All rights reserved.

Pin Name	Pin No.	Type	Power Domain	Reset Value	Pin Description
AUDIO_PWR_EN	107	DO	VDD_EXT_1V8	PD	External CODEC power enable
LCD					
LSCK	80	DO	VDD_EXT_1V8	PD	CLK signal for DBI-C serial 3/4 wire SPI LCD, connect to LCD CLK signal
LSDA	72	DO/DI	VDD_EXT_1V8	PD	Data signal for DBI-C serial 3/4 wire SPI LCD. For type interface I LCD, is data input/output signal. For type interface II LCD, is data output signal from FG360 module and connect to LCD data in signal
LSA0	75	DO	VDD_EXT_1V8	PD	RS signal for DBI-C serial 4 wire SPI LCD, DBI-C serial 3 wire SPI LCD not has this signal
LSCE0B	71	DO	VDD_EXT_1V8	PD	CS signal for DBI-C serial 3/4 wire SPI LCD, connect to LCD CS signal
LSDI	74	DI	VDD_EXT_1V8	PD	Data signal for DBI-C serial 3/4 wire SPI LCD. For type interface II LCD, is data input signal from FG360 module and connect to LCD data output signal. For type interface I LCD, not has this signal
LRSTB	78	DO	VDD_EXT_1V8	PD	Reset signal for DBI-C serial 3/4 wire SPI LCD, connect to LCD RST signal
DSI_TE	141	DI	VDD_EXT_1V8	PD	LCD frame synchronization signal
DISP_PWM	156	DO	VDD_EXT_1V8	PD	LCD Backlight control PWM signal
LCM_RST	288	DO	VDD_EXT_1V8	PD	DSI LCD reset signal
LCD_PWR_EN1	298	DO	VDD_EXT_1V8	PD	LCD power supply enable 1
LCD_PWR_EN2	180	DO	VDD_EXT_1V8	PD	LCD power supply enable 2
DSI0_CKN	406	AIO	AVDD12_DSI	-	DSI LCD MIPI CLK minus
DSI0_CKP	407	AIO	AVDD12_DSI	-	DSI LCD MIPI CLK plus
DSI0_D0N	405	AIO	AVDD12_DSI	-	DSI LCD MIPI lane0 minus
DSI0_D0P	404	AIO	AVDD12_DSI	-	DSI LCD MIPI lane0 plus
DSI0_D1N	408	AIO	AVDD12_DSI	-	DSI LCD MIPI lane1 minus
DSI0_D1P	409	AIO	AVDD12_DSI	-	DSI LCD MIPI lane1 plus
WIFI/BT					
BT_UTXD	135	DO	VDD_EXT_1V8	PD	UART TX signal
BT_URXD	138	DI	VDD_EXT_1V8	PD	UART RX signal

Reproduction forbidden without Fibocom Wireless Inc. written authorization - All rights reserved.

Pin Name	Pin No.	Type	Power Domain	Reset Value	Pin Description
BT_URTS	282	DO	VDD_EXT_1V8	PD	UART RTS signal
BT_UCTS	283	DI	VDD_EXT_1V8	PD	UART CTS signal
PCM0_DO	97	DO	VDD_EXT_1V8	PD	PCM data output
PCM0_DI	95	DI	VDD_EXT_1V8	PD	PCM data input
PCM0_CLK	96	DO	VDD_EXT_1V8	PD	PCM clock output
PCM0_SYNC	93	DO	VDD_EXT_1V8	PD	PCM synchronization signal
EINT16	144	DO	VDD_EXT_1V8	PD	MT6890 GPIO, used for control WIFI RESET signal or WIFI Power enable signal
EINT17	27	DO	VDD_EXT_1V8	PD	MT6890 GPIO, used for control WIFI RESET signal or WIFI Power enable signal
EINT18	279	DO	VDD_EXT_1V8	PD	MT6890 GPIO, used for control WIFI RESET signal or WIFI Power enable signal
EINT15	212	DI	VDD_EXT_1V8	PD	Interrupt input signal, used as WLAN_EN
BT_PRI_RXD	150	DI	VDD_EXT_1V8	PD	WIFI/BT and RF co-exist control signals
BT_ACT_TXD	153	DO	VDD_EXT_1V8	PD	WIFI/BT and RF co-exist control signals
WLAN_ACT	287	DI	VDD_EXT_1V8	PD	WIFI/BT and RF co-exist control signals
PTA_TX	99	DO	VDD_EXT_1V8	PD	WIFI/BT and RF co-exist control signals
PTA_RX	102	DI	VDD_EXT_1V8	PD	WIFI/BT and RF co-exist control signals
WIFI_GPIO1	286	DIO	VDD_EXT_1V8	PD	WIFI control signal 1, Reserved
WIFI_GPIO2	291	DIO	VDD_EXT_1V8	PD	WIFI control signal 2, Reserved
MMW					
NC	237	-	-	-	Reserved
NC	223	-	-	-	Reserved
NC	217	-	-	-	Reserved
NC	240	-	-	-	Reserved
NC	235	-	-	-	Reserved
NC	229	-	-	-	Reserved
NC	243	-	-	-	Reserved
NC	247	-	-	-	Reserved
NC	241	-	-	-	Reserved
NC	246	-	-	-	Reserved
NC	259	-	-	-	Reserved
NC	253	-	-	-	Reserved
Reserved					
RESERVED	23, 32, 48, 293,426~430	-	-	-	-
NC					

Reproduction forbidden without Fibocom Wireless Inc. written authorization - All rights reserved.

Pin Name	Pin No.	Type	Power Domain	Reset Value	Pin Description
NC	165,168,171, 174,177,231, 255,290,292, 294,410~425	-	-	-	-

Pin Name	Pin No.
GND	
GND	19, 31, 35, 36, 42, 50, 52, 81, 82, 83, 90, 91, 92, 118, 119, 122, 124, 125, 127, 128, 131, 132, 133, 134, 136, 137, 140, 142, 143, 145, 146, 147, 149, 151, 152, 154, 155, 158, 160, 161, 163, 164, 167, 169, 170, 172, 173, 176, 178, 179, 181, 182, 185, 187, 188, 190, 191, 192, 194, 195, 196, 197, 200, 202, 203, 206, 208, 213, 214, 215, 218, 220, 221, 222, 224, 226, 227, 228, 230, 232, 233, 234, 236, 238, 239, 242, 244, 245, 248, 250, 251, 254, 256, 257, 258, 260, 262, 266, 277, 284, 289, 299, 300, 301, 302, 303, 304, 305, 306, 307, 308, 309, 310, 311, 312, 313, 314, 315, 316, 317, 318, 319, 320, 321, 322, 323, 324, 325, 326, 327, 328, 329, 330, 331, 332, 333, 334, 335, 336, 337, 338, 339, 340, 341, 342, 343, 344, 345, 346, 347, 348, 349, 350, 351, 352, 353, 354, 355, 356, 357, 358, 359, 360, 361, 362, 363, 364, 365, 366, 367, 368, 369, 370, 371, 372, 373, 374, 375, 376, 377, 378, 379, 380, 381, 382, 383, 384, 385, 386, 387, 388, 389, 390, 391, 392, 397,398

Note:

1. The PWRKEY and SYS_RESIN_N pins have internal pull-up, and the pull-up power supply is in exclusive mode; no external pull-up is required; PON_1 pin module with weak pull-down, maximum input voltage must not exceed VBAT_BB.

Reproduction forbidden without Fibocom Wireless Inc. written authorization - All rights reserved.

4 Structural Specification

4.1 Product Appearance

The appearance of the FG360 module product is as shown:

Figure 4-1 Module product appearance

4.2 Dimension of Structure

The structural dimensions of the FG360 module are shown in the figure:

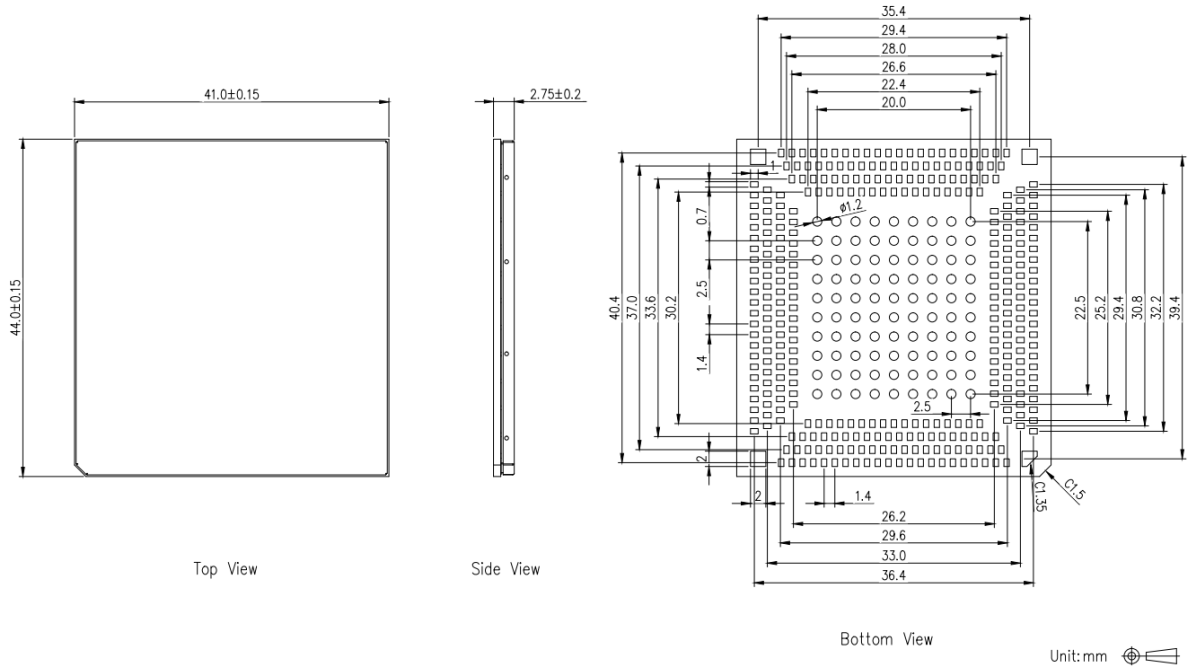

Figure 4-2 Structure size chart

Note:

Unmarked dimensional tolerances are 0.1mm.

Reproduction forbidden without Fibocom Wireless Inc. written authorization - All rights reserved.

4.3 Storage

Refer to *FIBOCOM FG360-NA Series SMT Design Guide.*

4.4 Packing

Refer to *FIBOCOM FG360-NA Series SMT Design Guide.*

Reproduction forbidden without Fibocom Wireless Inc. written authorization - All rights reserved.