PERFECT WIRELESS EXPERIENCE

FIBOCOM FM101-GL

Hardware Guide

V1.0

Copyright

Copyright ©2021 Fibocom Wireless Inc. All rights reserved.

Without the prior written permission of the copyright holder, any company or individual is prohibited to excerpt, copy any part of or the entire document, or transmit the document in any form.

Notice

The document is subject to update from time to time owing to the product version upgrade or other reasons. Unless otherwise specified, the document only serves as the user guide. All the statements, information and suggestions contained in the document do not constitute any explicit or implicit guarantee.

Trademark

Fibocom The trademark is registered and owned by Fibocom Wireless Inc.

Contact

Website: https://www.fibocom.com/en/

Address: Floor 10, Building A, Shenzhen International Innovation Valley, First Stone Road, Xili Community, Xili Street, Nanshan District, Shenzhen

Tel: +86 755-26733555

Contents

Change History 4
1 Foreword 5
1.1 Introduction 5
1.2 Reference Standard 5
1.3 Related Documents 6
2 Overview 7
2.1 Introduction 7
2.2 Specification 7
2.2.1 RF Characteristic 7
2.3 Key Features 8
2.4 Application Block 10
2.5 Hardware Block Diagram 11
2.6 Antenna Configuration 12
3 Application Interface 13
3.1 M.2 Interface 13
3.1.1 Pin Map 13
3.1.2 Pin Definition 14
3.2 Power Supply 20
3.2.1 Power Supply 21
3.2.2 Logic Level 23
3.2.3 Power Consumption 24
3.3 Control Signal 26
3.3.1 Module Start-Up 27
3.3.1.1 Start-up Circuit 27
3.3.1.2 Start-up Timing Sequence 27
3.3.2 Module Shutdown 28
3.3.3 Module Reset 29
3.4 USIM Interface 31
3.4.1 USIM Pins 32

Copyright © Fibocom Wireless Inc.

3.4.2 USIM Interface Circuit 32
3.4.2.1 N.C. SIM Card Slot 32
3.4.2.2 N.O. SIM Card Slot 33
3.4.3 USIM Hot-Plug 33
3.4.4 USIM Design 34
3.4.5 USB 3.0 Interface Application 35
3.5 Status Indicator 36
3.5.1 LED#1 Signal 36
3.6 Interrupt Control 37
3.6.1 W_DISABLE1# 37
3.6.2 DPR 38
3.7 ANT Tunable Interface 38
3.8 Configuration Interface 39
4 Radio Frequency 41
4.1 RF Interface 41
4.1.1 RF Interface Functionality 41
4.1.2 RF Connector Characteristic 41
4.1.3 RF Connector Dimensions 42
4.1.4 RF Connector Assembly 43
4.2 Operating Band 44
4.3 Transmitting Power 46
4.4 Receiver Sensitivity 48
4.4.1 Dual Antennas Receiver Sensitivity 48
4.5 GNSS 51
4.6 Antenna Design 52
5 ESD Characteristics 56
6 Structure Specification 57
6.1 Product Appearance 57
6.2 Dimension of Structure 57
6.3 M.2 Interface Model 58
6.4 M.2 Connector 59

6.5 M.2 Card Assembly 61
6.5.1 Card Insertion 61
6.5.2 Mid-mount Connection with Single-Sided Module 61
6.5.1 Top-mount Connection with Single-Sided Module 62
6.6 Storage 63
6.6.1 Storage Life 63
6.7 Packaging 63
6.7.1 Tray Package 63
6.7.2 Tray Size 64

Change History

V1.0 (2021-09-22)	Draft version.

Copyright © Fibocom Wireless Inc.

1 Foreword

1.1 Introduction

The document describes the electrical characteristics, RF performance, dimensions and application environment, etc. of FM101-GL (hereinafter referred to as FM101). With the assistance of the document and other instructions, the developers can quickly understand the hardware functions of FM101 modules and develop products.

1.2 Reference Standard

The design of the product complies with the following standards:

- 3GPP TS 34.121-1 V8.11.0: User Equipment (UE) conformance specification; Radio transmission and reception (FDD); Part 1: Conformance specification
- 3GPP TS 34.122 V11.13.0: Technical Specification Group Radio Access Network; Radio transmission and reception (TDD)
- 3GPP TS 36.521-1 V13.4.0: User Equipment (UE) conformance specification; Radio transmission and reception; Part 1: Conformance testing
- 3GPP TS 21.111 V10.0.0: USIM and IC card requirements
- 3GPP TS 51.011 V4.15.0: Specification of the Subscriber Identity Module -Mobile Equipment (SIM-ME) interface
- 3GPP TS 31.102 V10.11.0: Characteristics of the Universal Subscriber Identity Module (USIM) application
- 3GPP TS 31.11 V10.16.0: Universal Subscriber Identity Module (USIM) Application Toolkit (USAT)
- 3GPP TS 36.124 V10.3.0: Electro Magnetic Compatibility (EMC) requirements for mobile terminals and ancillary equipment
- 3GPP TS 27.007 V10.0.8: AT command set for User Equipment (UE)

Copyright © Fibocom Wireless Inc.

- 3GPP TS 27.005 V10.0.1: Use of Data Terminal Equipment - Data Circuit terminating Equipment (DTE-DCE) interface for Short Message Service (SMS) and Cell Broadcast Service (CBS)
- PCI Express M.2 Specification Rev4.0

1.3 Related Documents

TBD

Copyright © Fibocom Wireless Inc.

2 Overview

2.1 Introduction

FM101 is a highly integrated 4G WWAN module which uses M.2 form factor interface. It supports LTE FDD/LTE TDD/WCDMA systems and can be applied to most cellular networks of mobile carrier in the world.

2.2 Specification

2.2.1 RF Characteristic

FM101 RF characteristic is shown in Table 1:

Table 1. RF characteristic

Operating Band	
FDD-LTE	B1/2/3/4/5/7/8/12/13/14/17/18/19/20/25/26/28/29/30/66/71
TDD-LTE	B38/39[1)]/40[3)]/41/42[3)]/43[3)]/48[2)]
UMTS/HSPA+	B1/2/4/5/6/8/19
GNSS	GPS/GLONASS/Galileo/BDS
Data Throughput	
LTE Peak	DL 300Mbps (CAT6)/UL 50Mbps (CAT4)
UMTS/HSPA+ Peak	DL UMTS: 384 kbps/UL 384 kbps
	DL DC-HSPA+: 42 Mbps (CAT24)/UL 5.76 Mbps (CAT6[4)])
Modulation Characteristic	
LTE Modulation	3GPP Release 12

Copyright © Fibocom Wireless Inc.

	Download 64 QAM
UMTS Modulation	3GPP Release 9
RF Characteristic	
HPUE[5)]	B41
MIMO	2x2 MIMO
Carrier Aggregation	
LTE	DL 2CA

1) Don't support B39 in Japan
2) Don't support B40/42/43 in FCC/IC
3) Don't support B48 in IC
4) CAT8 11.5Mbps under developing
5) Don't support HPUE in Japan

2.3 Key Features

Table 2. Key features

Specification	
CPU	Qualcomm SDX12, 14nm process, ARM Cortex-A7, up to 1.28 GHz
Memory	2Gb LPDDR2+2Gb NAND Flash
Supported OS	Windows 10/Chrome /Linux
Power Supply	DC 3.135V to 4.4V, typical 3.3V

Copyright © Fibocom Wireless Inc.

Temperature	Normal operating temperature: –10°C to +55°C
	Extended operating temperature: –30°C to +75°C[1)]
	Storage temperature: –40°C to +85°C
Physical Characteristics	Interface: M.2 Key-B
	Dimension: 30 mm x 42 mm x 2.3 mm
	Weight: TBD
Interface	
Antenna Connector	WWAN Antenna x 2
	Support 2x2 MIMO
Function Interface	Dual SIM (one embedded eSIM), 1.8V/3V
	USB 2.0 (For debug)
	USB 3.0
	W_Disable#
	Bodysar
	LED
	Tunable antenna
	I2C (Reserved)
Software	
Protocol Stack	IPV4/IPV6
AT Commands	3GPP TS 27.007 and 27.005
Firmware Update	USB
Other Feature	Multiple carrier

Copyright © Fibocom Wireless Inc.

	Windows MBIM support
	Windows update
	AGNSS

1) When temperature goes beyond normal operating temperature range of -10°C to +55°C, RF performance of module may be slightly off 3GPP specifications.

2.4 Application Block

The peripheral applications for FM101 module are shown in Figure 1:

2.5 Hardware Block Diagram

The hardware block diagram in Figure 2 shows the main hardware functions of FM101 module, including base band and RF functions.

Baseband contains:

- UMTS/LTE TDD/LTE FDD controller
- PMU
- MCP (NAND+ LPDDR2)
- Application interface

RF contains:

- RF Transceiver
- RF DCDC/PA
- RF Duplexer
- Antenna Connector

Copyright © Fibocom Wireless Inc.

2.6 Antenna Configuration

FM101 module supports two antennas and the configuration is as below table:

Table 3. Antenna configuration

Antenna Connector	Function Description	Band Configuration (TX)	Band Configuration (RX)	Frequency Range (MHz)
ANT0 (M)	Main antenna port for TRX	WCDMA B1/2/4/5/6/8/19 LTE Band B1/2/3/4/5/7/8/12/13/14/17/18/19/20/25/26/28/30/66/71/38/39/40/41/42/43/48	WCDMA B1/2/4/5/6/8/19 LTE Band B1/2/3/4/5/7/8/12/13/14/17/18/19/20/25/26/28/29/30/66/71/38/39/40/41/42/43/48	617–3800
ANT1 (D/G)	Antenna port for RX		WCDMA B1/2/4/5/6/8/19 LTE Band B1/2/3/4/5/7/8/12/13/14/17/18/19/20/25/26/28/29/30/66/71/38/39/40/41/42/43/48 GNSS	617–3800

3 Application Interface

3.1 M.2 Interface

The FM101 module applies standard M.2 Key-B interface, with a total of 75 pins.

3.1.1 Pin Map

74	+3.3V	CONFIG_2	75
72	+3.3V	GND	73
70	+3.3V	GND	71
68	NC	CONFIG_1	69
66	SIM1_DETECT(1.8V)	RESET#(1.8V)	67
64	COEX_TXD(1.8V)	ANTCTL3(1.8V)	65
62	COEX_RXD(1.8V)	ANTCTL2(1.8V)	63
60	COEX3(1.8V)	ANTCTL1(1.8V)	61
58	RFE_RFFE_SDATA	ANTCTL0(1.8V)	59
56	RFE_RFFE_SCLK	GND	57
54	NC	NC	55
52	NC	NC	53
50	NC	GND	51
48	NC	NC	49
46	NC	NC	47
44	I2C_IRQ#(EINT)	GND	45
42	I2C_SDA(I2C Master)	NC	43
40	I2C_SCL(I2C Master)	NC	41
38	NC	GND	39
36	UIM1_PWR	USB3.0-Rx+	37
34	UIM1_DATA	USB3.0-Rx -	35
32	UIM1_CLK	GND	33
30	UIM1_RESET	USB3.0-Tx+	31
28	GPIO(I)	USB3.0-Tx -	29
26	W_DISABLE2#(3.3/1.8V)	GND	27
24	VIO_1.8V	DPR(3.3/1.8V)	25
22	GPIO(I)	WOWWAN#(1.8V)	23
20	GPIO(I)	CONFIG_0	21
	Notch	Notch	
	Notch	Notch	
	Notch	Notch	
	Notch	Notch	
10	LED1#(3.3V OD)	GND	11
8	W_DISABLE1#(3.3/1.8V)	USB D-(debug)	9
6	FULL_CARD_POWER_OFF#(3.3/1.8V)	USB D+(debug)	7
4	+3.3V	GND	5
2	+3.3V	GND	3
		CONFIG_3	1

Figure 1. Pin map

Pin “Notch” represents the gap of the gold fingers.

3.1.2 Pin Definition

IO Parameter definition is as below table.

Table 4. IO parameter definition

Type	Description
PI	Power Input
PO	Power Output
DI	Digital Input
DO	Digital Output
DIO	Digital Input /Output
AI	Analog Input
AO	Analog Output
AIO	Analog Input /Output
OD	Open Drain
T	Tristate
PU	Internal pull up
PD	Internal pull down
Hi-Z	High impedance
NC	Not connected

The pin definition is as follows:

Copyright © Fibocom Wireless Inc.

Table 5. Pin Definition

Pin	Pin Name	I/O	Reset Value	Pin Description	Type
1	CONFIG_3	O	GND	GND, FM101 M.2 module is configured as the WWAN – SSIC, USB 3.0 interface type	-
2	+3.3V	PI	-	Power input	Power Supply
3	GND	-	-	GND	Power Supply
4	+3.3V	PI	-	Power input	Power Supply
5	GND	-	-	GND	Power Supply
6	FULL_CARD_ POWER_OFF#	I	PU	Power enable, module power on input, internal pull up	3.3/1.8V
7	USB D+	I/O	-	USB data plus, only for debug	0.3---3V
8	W_DISABLE1#	I	PD	WWAN disable, default high, active low	3.3/1.8V
9	USB D-	I/O	-	USB data minus, only for debug	0.3---3V
10	LED1#	OD	T	System status LED, output open drain, CMOS 3.3V	3.3V
11	GND	-	-	GND	Power Supply
12	Notch			Notch	
13	Notch			Notch	

Copyright © Fibocom Wireless Inc.

Pin	Pin Name	I/O	Reset Value	Pin Description	Type
14	Notch			Notch	
15	Notch			Notch	
16	Notch			Notch	
17	Notch			Notch	
18	Notch			Notch	
19	Notch			Notch	
20	GPIO	I	PD	GPIO(I), default low, reserved	1.8V
21	CONFIG_0	-	NC	NC, FM101 M.2 module is configured as the WWAN – SSIC, USB 3.0 interface type	-
22	GPIO	I	PD	GPIO(I), default low, reserved	1.8V
23	WOWWAN#	O	PD	Wake up host, default low, Reserved	1.8V
24	ANT_TUNER_1V8	PO	PD	1.8V output for ANT Tuner, reserved.	Power Supply /1.8V
25	DPR	I	PD	Dynamic power reduction detect, default high, active low	3.3/1.8V
26	W_DISABLE2#	I	PD	GNSS disable, default high, active low, reserved	3.3/1.8V
27	GND	-	-	GND	Power Supply
28	GPIO	I	PD	GPIO(I), default low, reserved	1.8V
29	USB 3.0_TX-	O	-	USB 3.0 transmit data minus	-

Copyright © Fibocom Wireless Inc.

Pin	Pin Name	I/O	Reset Value	Pin Description	Type
30	UIM1_RESET	O	-	SIM reset signal	1.8V/3V
31	USB 3.0_TX+	O	-	USB 3.0 transmit data plus	-
32	UIM1_CLK	O	-	SIM clock signal	1.8V/3V
33	GND	-	-	GND	Power Supply
34	UIM1_DATA	I/O	-	SIM data input/output	1.8V/3V
35	USB 3.0_RX-	I	-	USB 3.0 receive data minus	-
36	UIM1_PWR	O	-	SIM power supply, 1.8V/3V	1.8V/3V
37	USB 3.0_RX+	I	-	USB 3.0 receive data plus	-
38	NC	-	-	NC	-
39	GND	-	-	GND	Power Supply
40	I2C_SCL	O	PU	I2C clock, master mode, default high, reserved	1.8V
41	NC	-	-	NC	-
42	I2C_SDA	I/O	PU	I2C data, master mode, default high, reserved	1.8V
43	NC	-	-	NC	-
44	I2C_IRQ#	I	PD	I2C interrupt, used for wake up I2C host, default high, reserved	1.8V
45	GND	-	-	GND	Power Supply

Copyright © Fibocom Wireless Inc.

Pin	Pin Name	I/O	Reset Value	Pin Description	Type
46	NC	-	-	NC	-
47	NC	-	-	NC	-
48	NC	-	-	NC	-
49	NC	-	-	NC	-
50	NC	-	-	NC	-
51	GND	-	-	GND	Power Supply
52	NC	-	-	NC	-
53	NC	-	-	NC	-
54	NC	-	-	NC	-
55	NC	-	-	NC	-
56	RFFE_SCLK	O	PD	MIPI interface tunable ANT, RFFE clock	1.8V
57	GND	-	-	GND	Power Supply
58	RFFE_SDATA	I/O	PD	MIPI interface tunable ANT, RFFE data	1.8V
59	ANTCTL0	O	PD	Tunable ANT CTRL0, default low	1.8V
60	COEX3	I/O	PD	Wireless coexistence between WWAN and WIFI/BT modules, based on BT-SIG coexistence protocol. COEX_EXT_FTA, Reserved	1.8V
61	ANTCTL1	O	PD	Tunable ANT CTRL1, default low	1.8V

Copyright © Fibocom Wireless Inc.

Pin	Pin Name	I/O	Reset Value	Pin Description	Type
62	COEX_RXD	I	PD	Wireless coexistence between WWAN and WIFI/BT modules, based on BT-SIG coexistence protocol. UART receive signal (WWAN module side), Reserved	1.8V
63	ANTCTL2	O	PD	Tunable ANT CTRL2, default low	1.8V
64	COEX_TXD	O	PD	Wireless coexistence between WWAN and WIFI/BT modules, based on BT-SIG coexistence protocol. UART transmit signal (WWAN module side), Reserved	1.8V
65	ANTCTL3	O	PD	Tunable ANT CTRL3, default low	1.8V
66	SIM1_DETECT	I	PD	SIM1 detect, internal pull up (390KΩ), active high	1.8V
67	RESET#	I	PU	WWAN reset input, internal pull up (22KΩ), active low	1.8V
68	NC	-	-	NC	-
69	CONFIG_1	O	GND	GND, FM101 M.2 module is configured as the WWAN – SSIC, USB 3.0 interface type	-
70	+3.3V	PI	-	Power input	Power Supply
71	GND	-	-	GND	Power Supply
72	+3.3V	PI	-	Power input	Power

Copyright © Fibocom Wireless Inc.

Pin	Pin Name	I/O	Reset Value	Pin Description	Type
					Supply
73	GND	-	GND	GND	-
74	+3.3V	PI	-	Power input	Power Supply
75	CONFIG_2	O	GND	GND, FM101 M.2 module is configured as the WWAN – SSIC, USB 3.0 interface type	-

Reset value is the status while module reset, not the status in working. Digital IO pins cannot be connected to power directly. The unused pins can be left floating.

3.2 Power Supply

The power interface of FM101 module as shown in the following table:

Table 6. Power interface

Pin	Pin Name	I/O	Pin Description	DC Parameter (V)		
				Minimum Value	Typical Value	Maximum Value
2, 4, 70, 72, 74	+3.3V	PI	Power supply input	3.135	3.3	4.4
24	ANT_TUNER_1V8	PO	1.8V power output for antenna tuner	1.71	1.8	1.89
36	UIM1_PWR	PO	USIM power supply	-	1.8V/3V	-

The Power rating is shown in the following table:

Table 7. Power rating

Pin	Pin Name	I/O	Pin Description	Peak Current (mA)
2, 4, 70, 72, 74	+3.3V	PI	Power supply input	2500
24	ANT_TUNER_1V8	PO	1.8V power output for antenna tuner	200
36	UIM1_PWR	PO	USIM power supply	150

3.2.1 Power Supply

The FM101 module should be powered through the +3.3V pins, and the power supply design is shown in Figure:

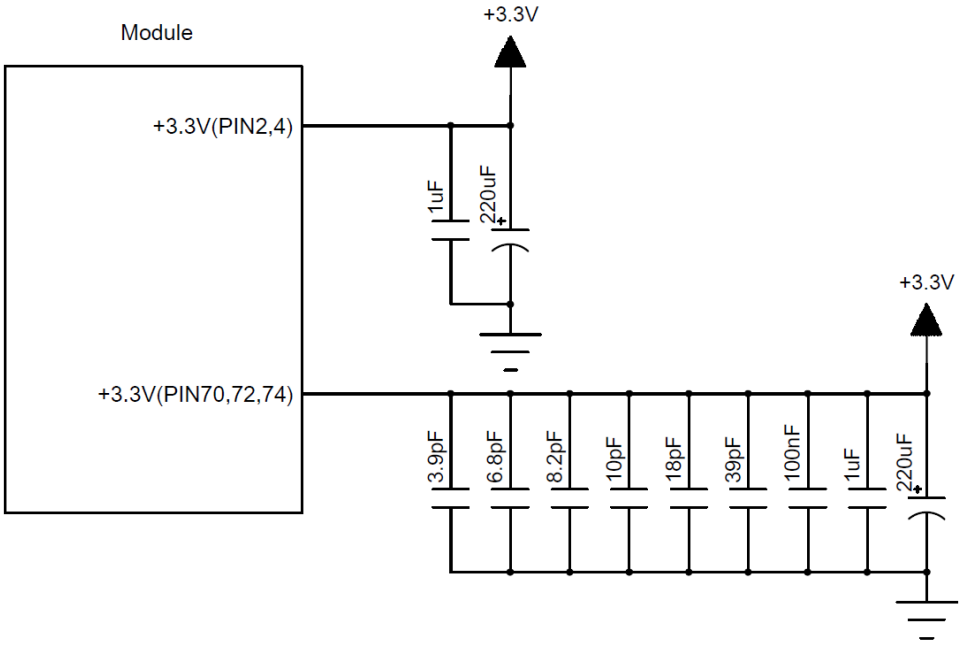

Figure 4. Power supply design

The filter capacitor design for power supply as shown in the following table:

Table 8. The filter capacitor design for power supply

Recommended capacitance	Application	Description
220uF x 2	Voltage-stabilizing capacitors	Reduce power fluctuations of the module in operation, requiring capacitors with low ESR. LDO or DC/DC power supply requires the capacitor with no less than 440uF in the power supply voltage range.
1uF, 100nF	Digital signal noise	Filter out the interference generated from the clock and digital signals
39pF, 33pF	700/800, 850/900 MHz frequency band	Filter out low frequency band RF interference
18pF, 10pF, 8.2pF, 6.8pF, 3.9pF	1500/1800, 2100/2300, 2600MHz, 3500/3600/3700MHz, 5GHz	Filter out medium/high frequency band RF interference

The stable power supply can ensure the normal operation of FM101 module; and the ripple of the power supply should be less than 300mVpp in design. When the module operates with the maximum emission power, the maximum operating current can reach 2.5A, so the power source should be not lower than 3.135V, or the module may shut down or reboot. The power supply limits are shown in Figure 5:

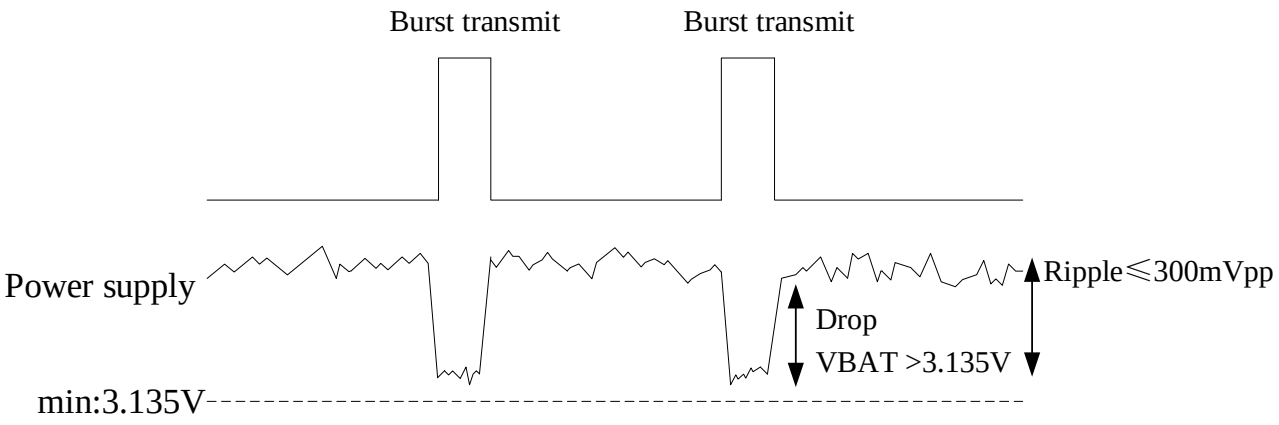

Figure 5. Power supply requirement

3.2.2 Logic Level

The FM101 module 1.8V logic level definition is shown in the following table:

Table 9. Module 1.8V logic level definition

Parameter	Minimum	Typical	Maximum	Unit
V_{OH}[1)]	1.71	1.8	1.89	V
V_{IH}[2)]	1.3	1.8	1.89	V
V_{IL}[3)]@1mA	-0.3	0	0.3	V

The FM101 module 3.3V logic level definition is shown in the following table:

Table 10. Module 3.3V logic level definition

Parameter	Minimum	Typical	Maximum	Unit
V_{IH}[2)]	2.3	3.3	3.465	V
V_{IL}[3)]@1mA	-0.3	0	0.3	V

1) V_{OH}: Output high level effective voltage.
2) V_{IH}: Input high level effective voltage.
3) V_{IL}: Input low level effective voltage.

Copyright © Fibocom Wireless Inc.

3.2.3 Power Consumption

In the condition of 3.3V power supply, the FM101 power consumption is shown in the following table:

Table 11. Power consumption

Parameter	Mode	Condition	Typical Current (mA)
I_{off}	Power off	Power supply, module power off	TBD
I_{Sleep}	WCDMA	DRX=6	TBD
		DRX=8	TBD
		DRX=9	TBD
	LTE FDD	Paging cycle #128 frames (1.28s DRx cycle)	TBD
	LTE TDD	Paging cycle #128 frames (1.28s DRx cycle)	TBD
	Radio Off	AT+CFUN=4, flight mode	TBD
$I_{WCDMA-RMS}$	WCDMA	WCDMA Data call Band 1 @23.5dBm	TBD
		WCDMA Data call Band 2 @23.5dBm	TBD
		WCDMA Data call Band 4 @23.5dBm	TBD
		WCDMA Data call Band 5 @23.5dBm	TBD
		WCDMA Data call Band 6 @23.5dBm	TBD
		WCDMA Data call Band 8 @23.5dBm	TBD
		WCDMA Data call Band 19 @23.5dBm	TBD
$I_{LTE-RMS}$	LTE FDD	LTE FDD Data call Band 1 @23dBm	TBD

Copyright © Fibocom Wireless Inc.

Parameter	Mode	Condition	Typical Current (mA)
		LTE FDD Data call Band 2 @23dBm	TBD
		LTE FDD Data call Band 3 @23dBm	TBD
		LTE FDD Data call Band 4 @23dBm	TBD
		LTE FDD Data call Band 5 @24dBm	TBD
		LTE FDD Data call Band 7 @23dBm	TBD
		LTE FDD Data call Band 8 @24dBm	TBD
		LTE FDD Data call Band 12 @24dBm	TBD
		LTE FDD Data call Band 13 @24dBm	TBD
		LTE FDD Data call Band 14 @24dBm	TBD
		LTE FDD Data call Band 17 @24dBm	TBD
		LTE FDD Data call Band 18 @24dBm	TBD
		LTE FDD Data call Band 19 @24dBm	TBD
		LTE FDD Data call Band 20 @24dBm	TBD
		LTE FDD Data call Band 25 @23dBm	TBD
		LTE FDD Data call Band 26 @24dBm	TBD
		LTE FDD Data call Band 28 @24dBm	TBD
		LTE FDD Data call Band 30 @22dBm	TBD
		LTE FDD Data call Band 66 @23dBm	TBD
		LTE FDD Data call Band 71 @24dBm	TBD
	LTE TDD	LTE TDD Data call Band 38 @23dBm	TBD

Copyright © Fibocom Wireless Inc.

Parameter	Mode	Condition	Typical Current (mA)
		LTE TDD Data call Band 39 @23dBm	TBD
		LTE TDD Data call Band 40 @23dBm	TBD
		LTE TDD Data call Band 41 @23dBm	TBD
		LTE TDD Data call Band 41 @26dBm	TBD
		LTE TDD Data call Band 42 @23dBm	TBD
		LTE TDD Data call Band 43 @23dBm	TBD
		LTE TDD Data call Band 48 @21dBm	TBD

The above data is the average value obtained by testing the sample for high/medium/low channels in room temperature(ambient 25℃). LTE TDD test is under the uplink downlink configuration 1 condition.

3.3 Control Signal

The FM101 module provides two control signals for power on/off and reset operations. The pin is defined in the following table:

Table 12. Control signal

Pin	Pin Name	I/O	Reset Value	Function	Level
6	FULL_CARD_POWER_OFF#	DI	PU	Module power on/off input, internal pull up (22KΩ) Power on: High/Floating Power off: Low	3.3/1.8V
67	RESET#	DI	PU	WWAN reset input, active low, internal pull up (22KΩ)	1.8V

RESET# needs to be controlled by independent GPIO, and not shared with other devices on the host. RESET# is sensitive signal, so it should be kept away from RF interference and protected by ground. It should be neither near PCB edge nor route on surface layer to avoid being reset abnormally caused by ESD.

3.3.1 Module Start-Up

3.3.1.1 Start-up Circuit

The FCPO# (FULL_CARD_POWER_OFF #) pin needs an external 3.3V or 1.8V pull up for booting up. AP (Application Processor) controls the module start-up. The recommended design is using a default PD port to control FCPO#. It also should reserve a 100KΩ(NC) pull down resistor on AP side. The circuit design is shown in Figure:

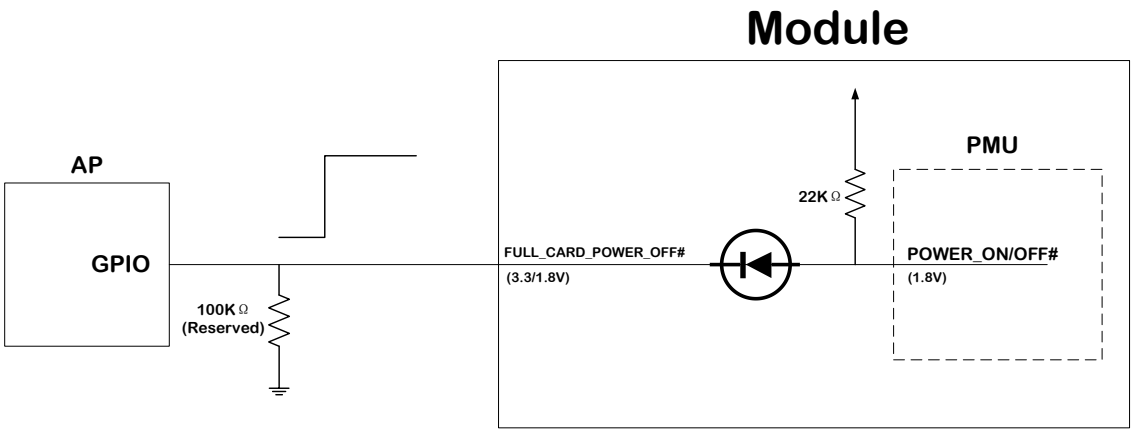

Figure 6. Circuit for module start-up controlled by AP

3.3.1.2 Start-up Timing Sequence

When power supply is ready, the PMU of module will power on and start initialization process by pulling high FCPO# signal. After about TBDs, module will complete initialization process. The start-up timing is shown in Figure:

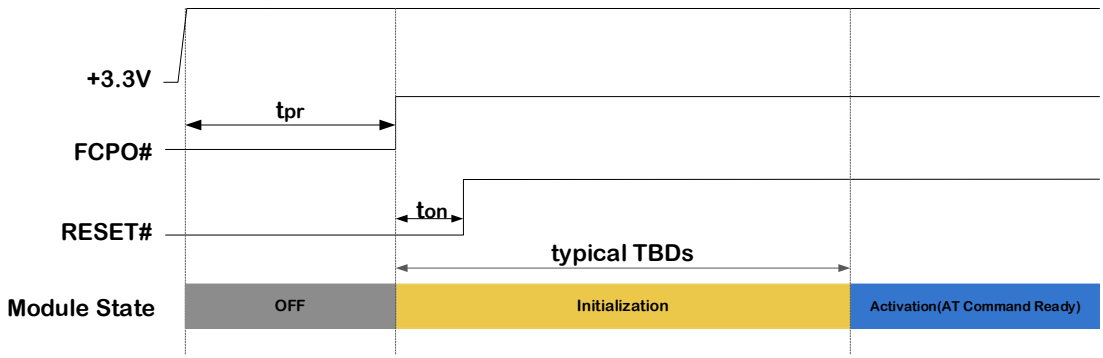

Figure 7. Timing control for start-up

Index	Min.	Recommended	Max.	Comment
t_{pr}	0ms	-	-	The delay time of power supply rising from 0V up to 3.135 V stably. If power supply always ready, it can be ignored.
t_{on}	8ms	20ms	-	The time from FCPO# high to RESET# high.

3.3.2 Module Shutdown

The module can be shut down by the following controls:

Shutdown Control	Action	Condition
Software (Recommend)	Sending AT+CPWROFF command, and then pull down RESET# and FCPO# pin	Normal operation status.
Hardware	Pull down RESET# and FCPO# pin	No response after sent the AT+CPWROFF

Copyright © Fibocom Wireless Inc.

The module can be shut down by sending AT+CPWROFF command. When the module receives the software shutdown command, the module will start the finalization process (the reverse process of initialization), and it will be completed after tsd time (tsd is the waiting time from AP send AT+CPWROFF to AP receive OK, the max tsd is 5s). The control timing is shown in Figure 8:

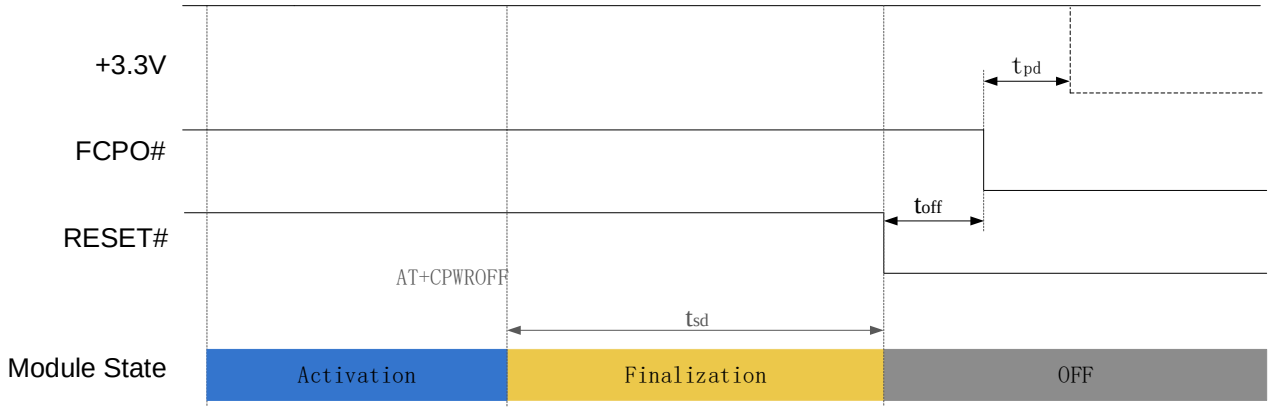

Figure 8. Recommend control power off timing

Index	Min.	Recommended	Max.	Comment
t_{pd}	10ms	100ms	-	The time for +3.3V delay time of shutdown. If + 3.3V keeps constant supply, the delay time can be ignored.
t_{off}	20ms	20ms	-	The time difference between the RESET # signal and the FULL_CARD_POWER_OFF # signal.
t_{sd}	0	-	5s	Waiting time from AP send AT+CPWROFF to AP receive OK

3.3.3 Module Reset

The FM101 module can reset to its initial status by pulling down the RESET# signal for more than

20ms, and module will restart after RESET# signal is released. When customer executes RESET# function, the PMU power will be turned off. The recommended circuit design is shown in the Figure 9:

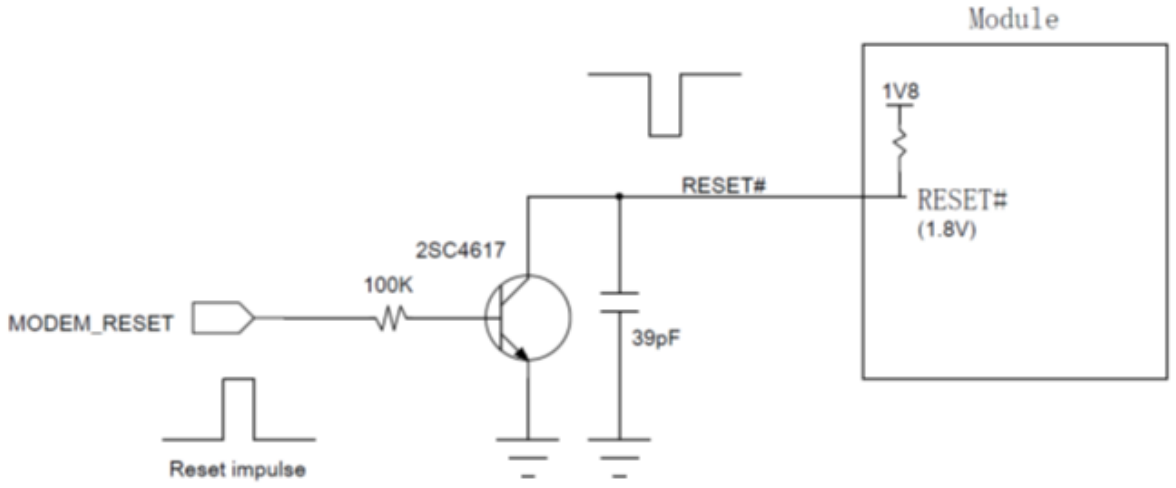

Figure 9. Recommended design for reset circuit

There are two reset control timings as below:

- Reset timing 1st in Figure 10, PMU of module internal always on in reset sequence, recommend using in FW upgrade and module recovery;
- Reset timing 2nd in Figure 11, PMU of module internal will be off in reset sequence (including whole power off and power on sequence, t_{sd} can refer section 3.3.2), recommend using in system warm boot.

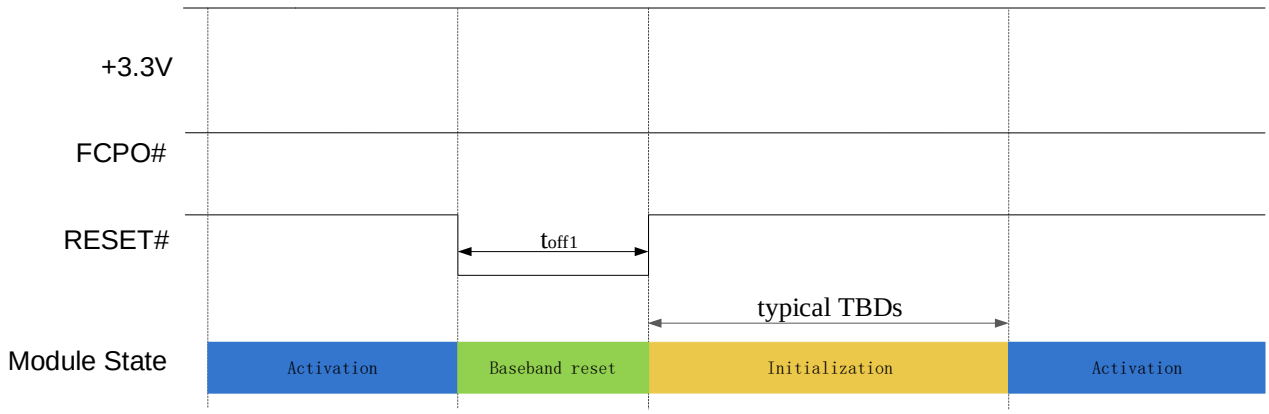

Figure 10. Reset timing 1st

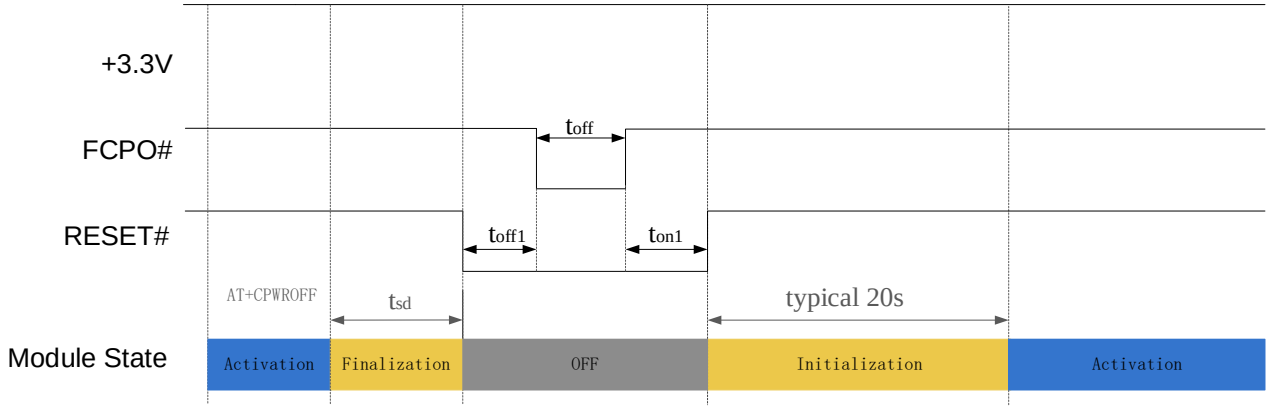

Figure 11. Reset timing 2nd

Index	Min.	Recommended	Max.	Comment
t_{off1}	20ms	20ms	-	FCPO# should be asserted after RESET#, refer section 3.3.2
t_{off}	500ms	500ms	-	Time to allow the WWAN module to fully discharge any residual voltages before the pin could be de-asserted again. This is required for both Pre-OS as well as Runtime flow
t_{on1}	8ms	20ms	-	RESET# should be de-asserted after FCPO# assert to high, refer section 3.3.1.2

RESET# is a sensitive signal, it's recommended to add a filter capacitor close to the module. In case of PCB layout, the RESET# signal lines should keep away from the RF interference and protected by GND. Also, the RESET# signal lines shall neither near the PCB edge nor route on the surface planes to avoid module from reset caused by ESD problems.

3.4 USIM Interface

The FM101 module has Dual SIM (one embedded eSIM and USIM interface)., USIM interface

supports 1.8V/3V SIM card.

3.4.1 USIM Pins

The USIM pins description is shown in the following table:

Pin	Pin Name	I/O	Reset Value	Description	Type
36	UIM1_PWR	PO	-	USIM power supply	1.8V/3V
30	UIM1_RESET	O	-	USIM reset	1.8V/3V
32	UIM1_CLK	O	-	USIM clock	1.8V/3V
34	UIM1_DATA	I/O	-	USIM data, internal pull up(4.7KΩ)	1.8V/3V
66	SIM1_DETECT	I	PD	USIM card detect, internal 390 KΩ pull-up. Active high, and high level indicates SIM card is inserted; and low level indicates SIM card is detached.	1.8V

3.4.2 USIM Interface Circuit

3.4.2.1 N.C. SIM Card Slot

The reference circuit design for N.C. (Normally Closed) SIM card slot is shown in Figure 12:

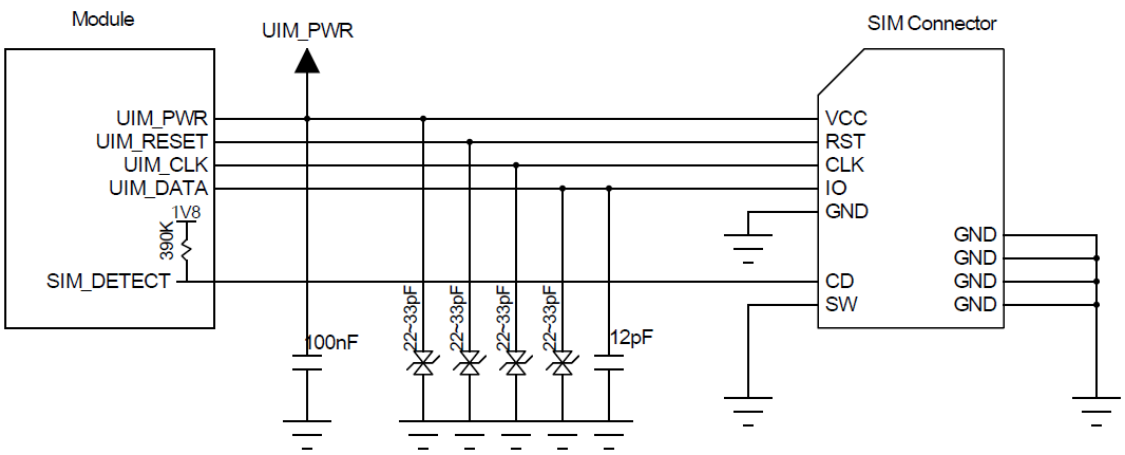

Figure 12. Reference circuit for N.C. SIM card slot

The principles of the N.C.SIM card slot are described as follows:

- When the SIM card is detached, it connects the short circuit between CD and SW pins, and drives the SIM1_DETECT pin low.
- When the SIM card is inserted, it connects an open circuit between CD and SW pins, and drives the SIM1_DETECT pin high.

3.4.2.2 N.O. SIM Card Slot

The reference circuit design for N.O. (Normally Open) SIM card slot is shown in Figure 13:

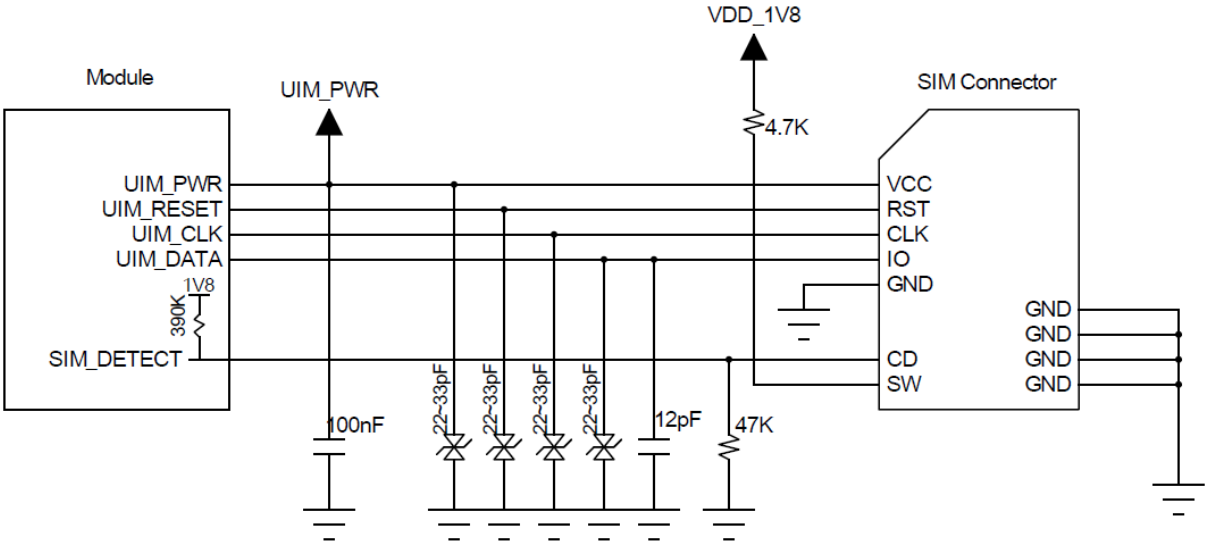

Figure 13. Reference circuit for N.O. SIM card slot

The principles of the N.O.SIM card slot are described as follows:

- When the SIM card is detached, it connects an open circuit between CD and SW pins, and drives the SIM_DETECT pin low.
- When the SIM card is inserted, it connects the short circuit between CD and SW pins, and drives the SIM_DETECT pin high.

3.4.3 USIM Hot-Plug

The FM101 module supports the SIM card hot-plug function, which determines whether the SIM

card is inserted or detached by detecting the SIM_DETECT pin state of the SIM card slot.

The SIM card hot-plugging function can be configured by AT+MSMPD command, and the description for AT command is shown in the following table:

AT Command	Hot-plug Detection	Function Description
AT+MSMPD=1	Enable	Default value, the SIM card hot-plug detection function is enabled. The module can detect whether the SIM card is inserted or not through the SIM_DETECT pin state.
AT+MSMPD=0	Disable	The SIM card hot-plug detect function is disabled. The module reads the SIM card when starting up, and the SIM_DETECT status will not be detected.

After the SIM card hot-plugging detection function is enabled, the module detects that the SIM card is inserted when the SIM_DETECT pin is high, then executes the initialization program and finish the network registration after reading the SIM card information. When the SIM_DETECT pin is low, the module determines that the SIM card is detached and does not read the SIM card.

SIM_DETECT is active high. It can be swapped to active low by AT CMD.

3.4.4 USIM Design

The SIM card circuit design should meet the EMC standards and ESD requirements with the improved capability to resist interference, to ensure that the SIM card can work stably. The following guidelines should be noted in design:

- The SIM card slot should be placed as close as possible to the module, and away from the RF antenna, DC/DC power supply, clock signal lines, and other strong interference sources.
- The SIM card slot with a metal shielding housing can improve the anti-interference ability.

- The trace length between the SIM card slot and the module should not exceed 100mm, or it could reduce the signal quality.
- The UIM_CLK and UIM_DATA signal lines should be isolated by GND to avoid crosstalk interference. If it is difficult for the layout, the whole SIM signal lines should be wrapped with GND as a group at least.
- The filter capacitors and ESD devices for SIM card signals should be placed near to the SIM card slot, and the ESD devices with 22~33pF capacitance should be used.

3.4.5 USB 3.0 Interface Application

The reference circuit is shown in Figure 14:

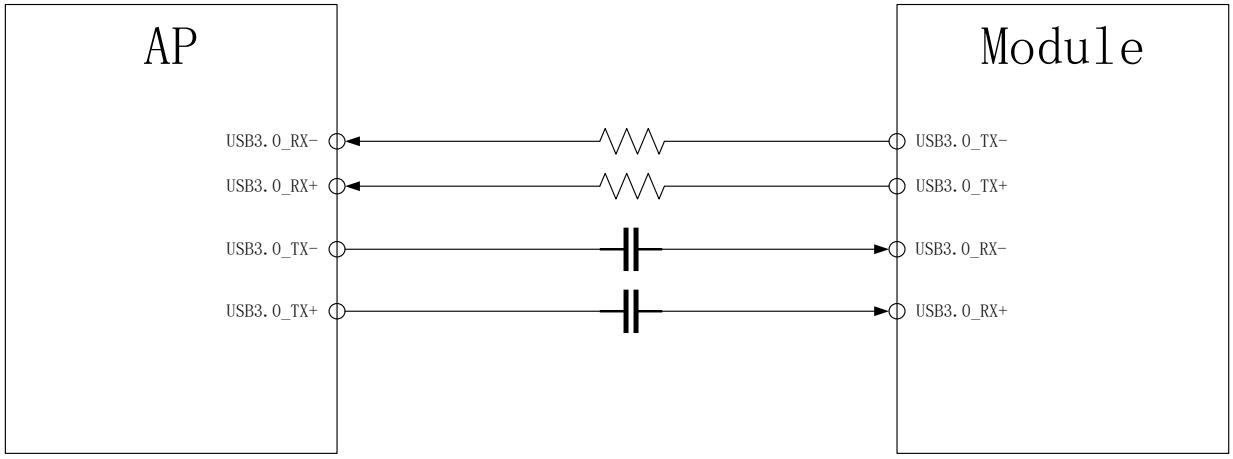

Figure 14. Reference circuit for USB 3.0 interface

USB 3.0 signals are super speed differential signal lines with the maximum transfer rate of 5Gbps. So the following rules should be followed carefully in the case of PCB layout:

- USB 3.0_TX-/USB 3.0_TX+ and USB 3.0_RX-/ USB 3.0_RX+ are two pairs differential signal lines. The differential impedance should be controlled as 90Ω.
- The two pairs differential signal lines should be parallel and have the equal length. The right angle routing should be avoided.
- The two pairs differential signal lines should be routed on the layer that is adjacent to the ground layer, and wrapped with GND vertically and horizontally.

Copyright © Fibocom Wireless Inc.

3.5 Status Indicator

The FM101 module provides two signals to indicate the operating status of the module, and the status indicator pins is shown in the following table:

Pin	Pin Name	I/O	Reset Value	Pin Description	Level
10	LED1#	OD	T	System status LED, drain output.	3.3V
23	WOWWAN#	DO	PD	Wake up host, default low, Reserved	1.8V

3.5.1 LED#1 Signal

The LED#1 signal is used to indicate the operating status of the module, and the detailed description is shown in the following table:

Module Status	LED1# Signal
RF function ON	Low level (LED on)
RF function OFF	High level (LED off)

The LED driving circuit is shown in figure 15:

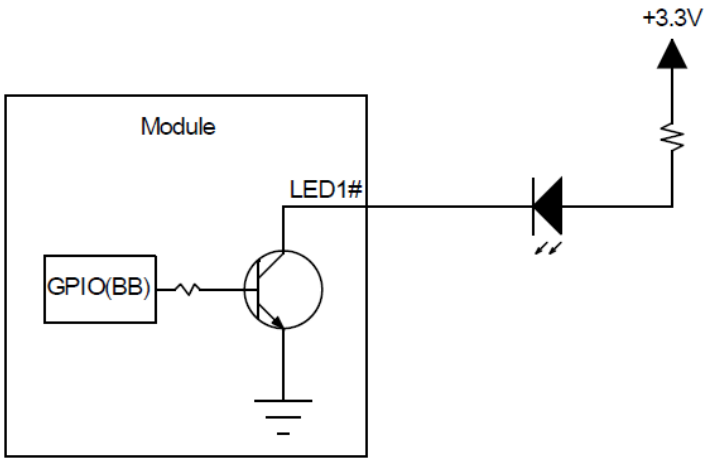

Figure 15. LED driving circuit

The resistance of LED current-limiting resistor is selected according to the driving voltage and the driving current.

3.6 Interrupt Control

The FM101 module provides two interrupt signals, and the pin definitions are as follows:

Pin	Pin Name	I/O	Reset Value	Pin Description	Type
8	W_DISABLE1#	I	PU	WWAN disable, default high, active low	3.3/1.8V
25	DPR	I	PD	Dynamic power reduction detect, default high, active low	3.3/1.8V

3.6.1 W_DISABLE1#

The module provides a hardware pin to enable/disable WWAN RF function, need AT+GTFMODE=1 to enable this function and the function can also be controlled by the AT command. The module enters into flight mode after the RF function is disabled. The definition of W_DISABLE1# signal is as follows:

W_DISABLE1# signal	Function
High/Floating	WWAN function is enabled, the module exits the flight mode.
Low	WWAN function is disabled, the module enters into flight mode.

The function of W_DISABLE1# is disabled in default. It can be enabled by customer's request.

3.6.2 DPR

The FM101 module supports BodySAR function by detecting the DPR pin. The voltage level of DPR is high by default, and when the SAR sensor detects the closing human body, the DPR signal will be pulled down. As the result, the module then lowers down its emission power to its default threshold value, thus reducing the RF radiation on the human body. The threshold of emission power can be set by the AT Commands. The definition of DPR signal is shown in the following table:

DPR Signal	Function
High/Floating	The module keeps the default emission power
Low	Lower the maximum emission power to the threshold value of the module.

3.7 ANT Tunable Interface

The module supports ANT Tunable interfaces with two different control modes, i.e. MIPI interface and 4bit GPO interface. Through cooperating with external antenna adapter switch via ANT tunable, it can flexibly configure the bands of WCDMA and LTE antenna to improve the antenna's working efficiency and save space for the antenna. Module also support 1.8V output for antenna tuner. The pin definition is as below table:

Pin	Pin Name	I/O	Reset Value	Pin Description	Level
24	ANT_TUNER_1V8	PO	PD	1.8V power output for antenna tuner, reserved	1.8V
56	RFFE_SCLK	O	PD	Tunable ANT control, MIPI Interface, RFFE clock	1.8V
58	RFFE_SDATA	I/O	PD	Tunable ANT control, MIPI Interface, RFFE data	1.8V
59	ANTCTL0	O	PD	Tunable ANT CTRL0, default low	1.8V

Copyright © Fibocom Wireless Inc.

Pin	Pin Name	I/O	Reset Value	Pin Description	Level
61	ANTCTL1	O	PD	Tunable ANT CTRL1, default low	1.8V
63	ANTCTL2	O	PD	Tunable ANT CTRL2, default low	1.8V
65	ANTCTL3	O	PD	Tunable ANT CTRL3, default low	1.8V

3.8 Configuration Interface

The FM101 module provides 4 configuration pins, they are output pins, used to read the level of H/L for the host system, so the host system can know the module type insert in the M.2 slot. If the host system is not need to know the module type, that is no need to connect these 4 pins, let they are floating is OK.

This module is configured as the WWAN-SSIC-0 type M.2 module:

Pin	Pin Name	I/O	Reset Value	Pin Description	Type
1	CONFIG_3	O	GND	GND, FM101 M.2 module is configured as the WWAN – SSIC, USB 3.0 interface type	-
21	CONFIG_0	-	NC	NC, FM101 M.2 module is configured as the WWAN – SSIC, USB 3.0 interface type	-
69	CONFIG_1	O	GND	GND, FM101 M.2 module is configured as the WWAN – SSIC, USB 3.0 interface type	-
75	CONFIG_2	O	GND	GND, FM101 M.2 module is configured as the WWAN – SSIC, USB 3.0 interface type	-

The M.2 module configuration is shown in the following table:

Config_0	Config_1	Config_2	Config_3	Module Type and Main	Port

(pin21)	(pin69)	(pin75)	(pin1)	Host Interface	Configuration
NC	GND	GND	GND	WWAN–SSIC	0

Please refer to “PCI Express M.2 Specification Rev4.0” for more details.

4 Radio Frequency

4.1 RF Interface

4.1.1 RF Interface Functionality

The FM101 module supports two RF connectors used for external antenna connection. As the Figure 16 shows, “M” is for Main antenna, which is used to receive and transmit RF signal; “D/G” is for Diversity antenna, which is used to receive the diversity RF signal and GNSS signal.

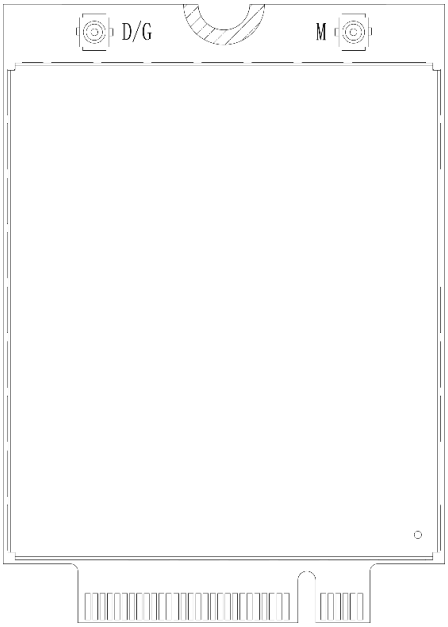

Figure 16. RF connectors

4.1.2 RF Connector Characteristic

Rated Condition		Environment Condition
Frequency Range	DC-6GHz	Temperature Range: –40°C-+85°C
Characteristic Impedance	50Ω	

4.1.3 RF Connector Dimensions

FM101 module uses standard M.2 RF connectors. The RF connector part number is 818004607 manufactured by ECT cooperation, and the size is 2×2×0.6mm. The connector dimension is shown as following picture:

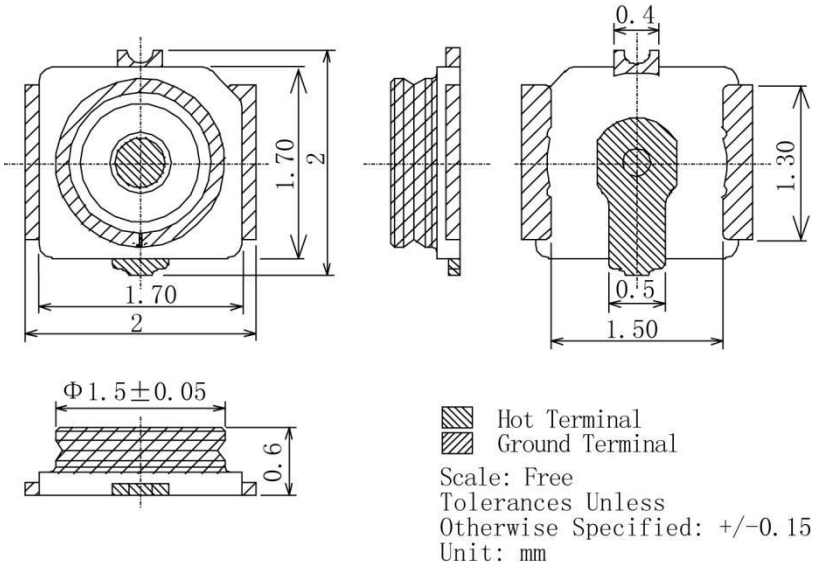

Figure 17. RF connector dimensions

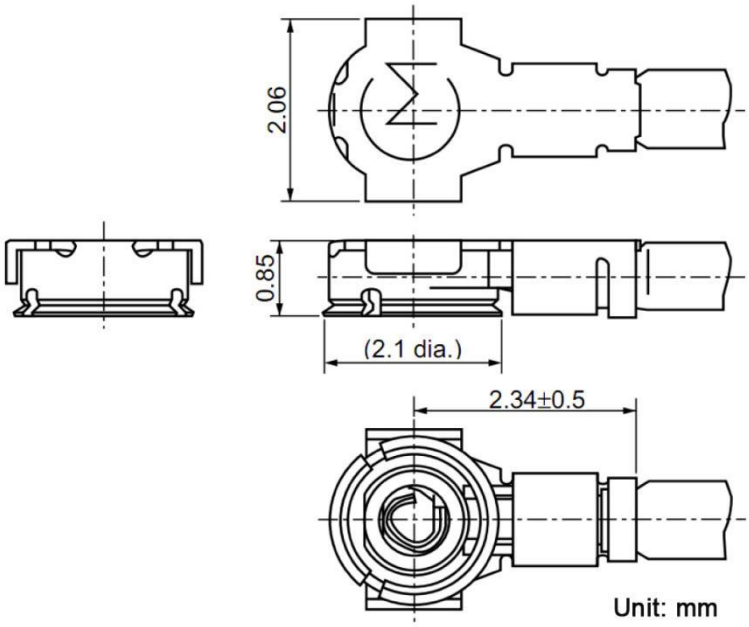

Figure 18. 0.81mm coaxial antenna dimensions

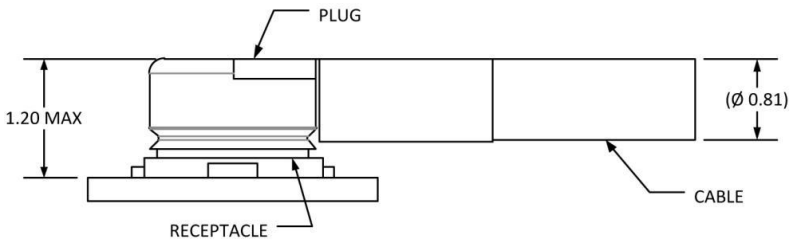

Figure 19. Schematic diagram of 0.81mm coaxial antenna connected to the RF connector

4.1.4 RF Connector Assembly

Mate RF connector parallel refer Figure 20, do not slant mate with strong force.

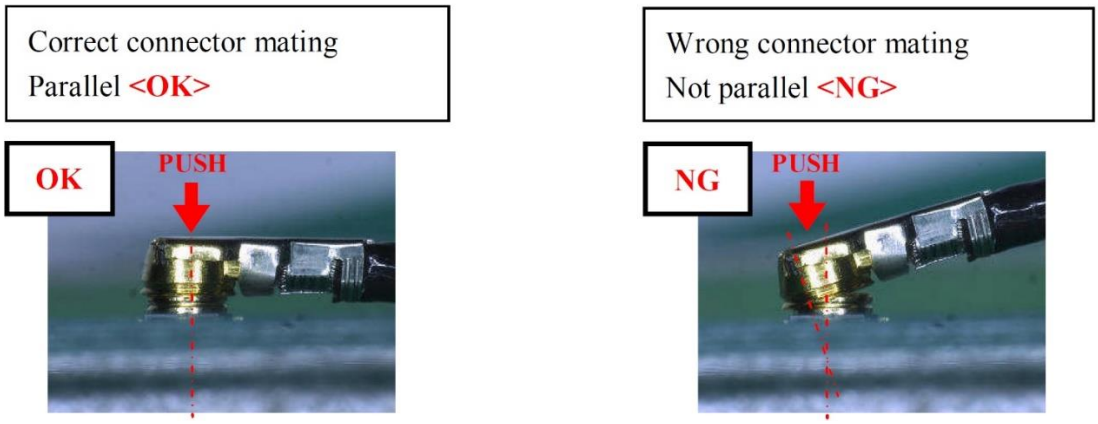

Figure 20. Mate RF connector

To avoid damage in RF connector mating, it is recommended using pulling JIG as Figure 21, and the pulling JIG must be lifted up vertically to PCB surface (see Figure 22 and 23). Pulling JIG must be lifted up vertically to PCB surface (see Figure 22 and 23).

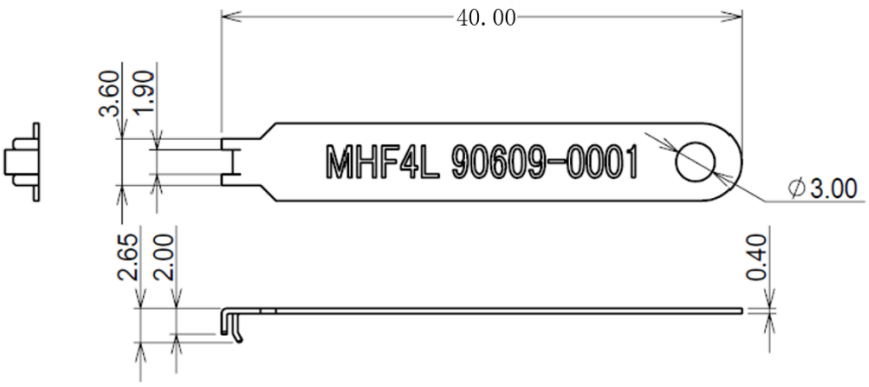

Figure 21. Pulling JIG

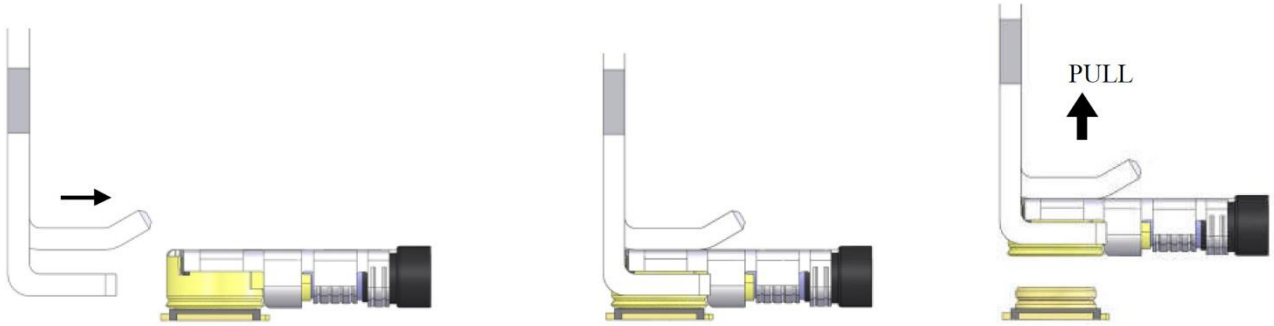

Figure 22. Lift up pulling JIG

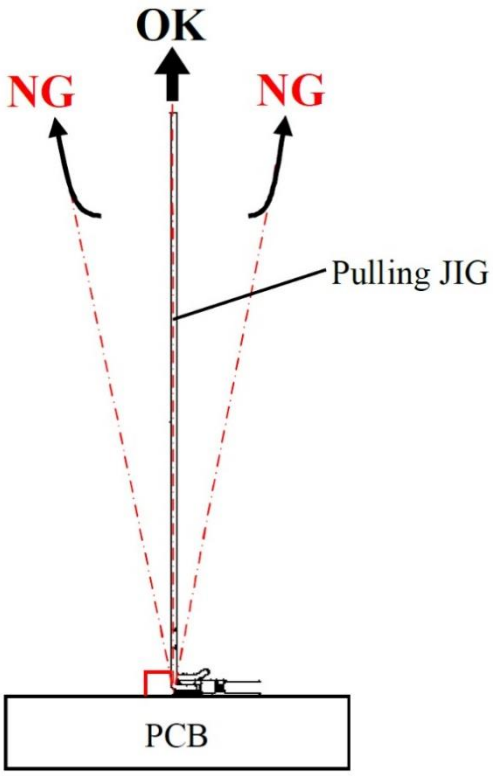

Figure 23. Pulling direction

4.2 Operating Band

The operating bands of FM101 module are shown in the following table:

Operating Band	Description	Mode	Tx (MHz)	Rx (MHz)
Band 1	2100MHz	LTE FDD/WCDMA	1920-1980	2110-2170

Copyright © Fibocom Wireless Inc.

Operating Band	Description	Mode	Tx (MHz)	Rx (MHz)
Band 2	1900MHz	LTE FDD/WCDMA	1850-1910	1930-1990
Band 3	1800MHz	LTE FDD	1710-1785	1805-1880
Band 4	1700MHz	LTE FDD/WCDMA	1710-1755	2110-2155
Band 5	850MHz	LTE FDD/WCDMA	824-849	869-894
Band 6	850MHz	LTE FDD/WCDMA	830-840	875-885
Band 7	2600Mhz	LTE FDD	2500-2570	2620-2690
Band 8	900MHz	LTE FDD/WCDMA	880-915	925-960
Band 12	700MHz	LTE FDD	699-716	729-746
Band 13	700MHz	LTE FDD	777-787	746-756
Band 14	700MHz	LTE FDD	788-798	758-768
Band 17	700MHz	LTE FDD	704-716	734-746
Band 18	800MHz	LTE FDD	815-830	860-875
Band 19	800MHz	LTE FDD/WCDMA	830-845	875-890
Band 20	800MHz	LTE FDD	832-862	791-821
Band 25	1900MHz	LTE FDD	1850-1915	1930-1995
Band 26	850MHz	LTE FDD	814-849	859-894
Band 28	700MHz	LTE FDD	703-748	758-803
Band 29	700MHz	LTE FDD	-	716-728
Band 30	2300MHz	LTE FDD	2305-2315	2350-2360
Band 66	1700MHz	LTE FDD	1710-1780	2110-2200
Band 71	680MHz	LTE FDD	663-698	617-652
Band 38	2600MHz	LTE TDD	2570-2620	

Copyright © Fibocom Wireless Inc.

Operating Band	Description	Mode	Tx (MHz)	Rx (MHz)
Band 39	1900MHZ	LTE TDD	1880-1920	
Band 40	2300MHz	LTE TDD	2300-2400	
Band 41	2500MHZ	LTE TDD	2496-2690	
Band 42	3500MHZ	LTE TDD	3400-3600	
Band 43	3700MHZ	LTE TDD	3600-3800	
Band 48	3600MHZ	LTE TDD	3550-3700	
GPS L1	-	-	-	1575.42±1.023
GLONASS L1	-	-	-	1602.5625±4
BDS	-	-	-	1561.098±2.046
Galileo	-	-	-	1575.42±1.023

4.3 Transmitting Power

The transmitting power for each band of FM101 module is shown in the following table:

Mode	Band	3GPP Requirement (dBm)	Tx Power (dBm)	Note
WCDMA	Band 1	24+1.7/-3.7	23.5±1	-
	Band 2	24+1.7/-3.7	23.5±1	-
	Band 4	24+1.7/-3.7	23.5±1	-
	Band 5	24+1.7/-3.7	23.5±1	-
	Band 6	24+1.7/-3.7	23.5±1	-
	Band 8	24+1.7/-3.7	23.5±1	-
	Band 19	24+1.7/-3.7	23.5±1	-

Copyright © Fibocom Wireless Inc.

Mode	Band	3GPP Requirement (dBm)	Tx Power (dBm)	Note
LTE FDD	Band 1	23±2.7	23±1	10MHz Bandwidth, 1 RB
	Band 2	23±2.7	23±1	10MHz Bandwidth, 1 RB
	Band 3	23±2.7	23±1	10MHz Bandwidth, 1 RB
	Band 4	23±2.7	23±1	10MHz Bandwidth, 1 RB
	Band 5	23±2.7	24±1	10MHz Bandwidth, 1 RB
	Band 7	23±2.7	23±1	10MHz Bandwidth, 1 RB
	Band 8	23±2.7	24±1	10MHz Bandwidth, 1 RB
	Band 12	23±2.7	24±1	10MHz Bandwidth, 1 RB
	Band 13	23±2.7	24±1	10MHz Bandwidth, 1 RB
	Band 14	23±2.7	24±1	10MHz Bandwidth, 1 RB
	Band 17	23±2.7	24±1	10MHz Bandwidth, 1 RB
	Band 18	23±2.7	24±1	10MHz Bandwidth, 1 RB
	Band 19	23±2.7	24±1	10MHz Bandwidth, 1 RB
	Band 20	23±2.7	24±1	10MHz Bandwidth, 1 RB
	Band 25	23±2.7	23±1	10MHz Bandwidth, 1 RB
	Band 26	23±2.7	24±1	10MHz Bandwidth, 1 RB
	Band 28	23+2.7/-3.2	24±1	10MHz Bandwidth, 1 RB
	Band 30	23±2.7	22±1	10MHz Bandwidth, 1 RB
	Band 66	23±2.7	23±1	10MHz Bandwidth, 1 RB
	Band 71	23+2.7/-3.2	24±1	10MHz Bandwidth, 1 RB
LTE TDD	Band 38	23±2.7	23±1	10MHz Bandwidth, 1 RB

Copyright © Fibocom Wireless Inc.

Mode	Band	3GPP Requirement (dBm)	Tx Power (dBm)	Note
	Band 39	23±2.7	23±1	10MHz Bandwidth, 1 RB
	Band 40	23±2.7	23±1	10MHz Bandwidth, 1 RB
	Band 41 (HPUE)	26±2.7	26±1	10MHz Bandwidth, 1 RB
	Band 41 (Non-HPUE mode)	23±2.7	23±1	10MHz Bandwidth, 1 RB
	Band 42	23+3/-4	23±1	10MHz Bandwidth, 1 RB
	Band 43	23+3/-4	23±1	10MHz Bandwidth, 1 RB
	Band 48	23+2/-3	21±1	10MHz Bandwidth, 1 RB

Module default max capability support HPUE. The real working mode is decided by NW. If NW support HPUE, the module can work in HPUE. If NW can only support PC3, the module will work in non-HPUE mode.

4.4 Receiver Sensitivity

4.4.1 Dual Antennas Receiver Sensitivity

All bands support dual antennas, the receiver sensitivity for each band of FM101 module is shown in below table:

Mode	Band	3GPP Requirement (dBm)	Rx Sensitivity Typical(dBm)	Note
WCDMA	Band 1	-106.7	TBD	BER < 0.1%
	Band 2	-104.7	TBD	BER < 0.1%

Mode	Band	3GPP Requirement (dBm)	Rx Sensitivity Typical(dBm)	Note
	Band 4	-106.7	TBD	BER < 0.1%
	Band 5	-104.7	TBD	BER < 0.1%
	Band 6	-106.7	TBD	BER < 0.1%
	Band 8	-103.7	TBD	BER < 0.1%
	Band 19	-106.7	TBD	BER < 0.1%
LTE FDD	Band 1	-96.3	TBD	10MHz Bandwidth
	Band 2	-94.3	TBD	10MHz Bandwidth
	Band 3	-93.3	TBD	10MHz Bandwidth
	Band 4	-96.3	TBD	10MHz Bandwidth
	Band 5	-94.3	TBD	10MHz Bandwidth
	Band 7	-94.3	TBD	10MHz Bandwidth
	Band 8	-93.3	TBD	10MHz Bandwidth
	Band 12	-93.3	TBD	10MHz Bandwidth
	Band 13	-93.3	TBD	10MHz Bandwidth

Copyright © Fibocom Wireless Inc.

Mode	Band	3GPP Requirement (dBm)	Rx Sensitivity Typical(dBm)	Note
	Band 14	-93.3	TBD	10MHz Bandwidth
	Band 17	-93.3	TBD	10MHz Bandwidth
	Band 18	-96.3	TBD	10MHz Bandwidth
	Band 19	-96.3	TBD	10MHz Bandwidth
	Band 20	-93.3	TBD	10MHz Bandwidth
	Band 25	-92.8	TBD	10MHz Bandwidth
	Band 26	-93.8	TBD	10MHz Bandwidth
	Band 28	-94.8	TBD	10MHz Bandwidth
	Band 29	-93.3	TBD	10MHz Bandwidth
	Band 30	-95.3	TBD	10MHz Bandwidth
	Band 66	-95.8	TBD	10MHz Bandwidth
	Band 71	-93.5	TBD	10MHz Bandwidth

Copyright © Fibocom Wireless Inc.

Mode	Band	3GPP Requirement (dBm)	Rx Sensitivity Typical(dBm)	Note
LTE TDD	Band 38	-96.3	TBD	10MHz Bandwidth
	Band 39	-96.3	TBD	10MHz Bandwidth
	Band 40	-96.3	TBD	10MHz Bandwidth
	Band 41	-94.3	TBD	10MHz Bandwidth
	Band 42	-95	TBD	10MHz Bandwidth
	Band 43	-95	TBD	10MHz Bandwidth
	Band 48	-95	-102	10MHz Bandwidth

The above values are measured in dual antennas condition (Main+Diversity). For single main antenna (without Diversity), the sensitivity will drop about 3dBm for each band of LTE.

4.5 GNSS

FM101 module supports GPS/GLONASS/BDS/GALILEO and adopts RF Diversity and GNSS integrated antenna.

Description	Positioning system	Condition	Test Result
			Typical
Current	GPS	Fixing	TBD
		Tracking	TBD
		Sleep	TBD
	GPS+ BDS+ GLONASS+ Galileo	Fixing	TBD
		Tracking	TBD
		Sleep	TBD
TTFF	GPS	Cold start	TBD
		Warm start	TBD
		Hot Start	TBD
	GPS+ BDS+ GLONASS+ Galileo	Cold start	TBD
		Warm start	TBD
		Hot Start	TBD
Sensitivity	GPS	Tracking	TBD
		Acquisition	TBD
	GPS+ BDS+ GLONASS+ Galileo	Tracking	TBD
		Acquisition	TBD

GNSS current is tested with RF disabled at 25°C temperature.

4.6 Antenna Design

The FM101 module provides two antenna interfaces, and the antenna design requirements are shown in the following table:

FM101 Module Main Antenna Requirement	
Frequency range	The most proper antenna to adapt the frequencies should be used.
Bandwidth (WCDMA)	WCDMA band 1 (2100): 250 MHz WCDMA band 2 (1900): 140 MHz WCDMA band 4 (1700): 445 MHz WCDMA band 5 (850): 70 MHz WCDMA band 6 (8500): 55 MHz WCDMA band 8 (900): 80 MHz WCDMA band 19 (850): 60 MHz
Bandwidth (LTE)	LTE band 1 (2100): 250 MHz LTE band 2 (1900): 140MHz LTE Band 3 (1800): 170 MHz LTE band 4 (1700): 445MHz LTE band 5 (850): 70 MHz LTE band 7 (2600): 190 MHz LTE Band 8 (900): 80 MHz LTE Band 12 (700): 47 MHz LTE Band 13 (700): 41 MHz LTE Band 14 (700): 40 MHz LTE Band 17 (700): 42 MHz LTE Band 18 (800): 80 MHz LTE Band 19 (800): 80 MHz LTE band 20 (800): 71 MHz LTE band 25 (1900):145 MHz

Copyright © Fibocom Wireless Inc.

FM101 Module Main Antenna Requirement	
	LTE band 26 (850): 80 MHz LTE band 28 (700): 100 MHz LTE band 29 (700): 12 MHz LTE band 30 (2300): 55 MHz LTE band 66 (1700): 490MHz LTE band 71 (680): 35MHz LTE band 38 (2600): 50 MHz LTE Band 39 (1900): 40 MHz LTE band 40 (2300): 100 MHz LTE band 41 (2500): 194 MHz LTE band 42 (3500): 200 MHz LTE band 43 (3700):200MHz LTE band 48 (3600):150MHz
Bandwidth (GNSS)	GPS: 2 MHz GLONASS: 8 MHz BDS: 4 MHz Galileo: 2 MHz
Impedance	50Ω
Input power	> 28 dBm average power WCDMA & LTE
Recommended standing-wave ratio (SWR)	≤2:1

ANT on B30 suggestion: Peak gain < 1dBi, for FCC EIRP requirement, Efficient > 50% for carrier TRP requirement. If integrator doesn't follow the instruction, may

cause FCC EIRP or carrier TRP certification fail.

5 ESD Characteristics

The module is generally not protected against Electrostatic Discharge (ESD). ESD handling precautions that apply to ESD sensitive components should be strictly followed. Proper ESD handling procedures must be applied throughout the processing, handling, assembly and operation of any application with module. The ESD characteristics are shown in the following table (Temperature: 25°C, Relative Humidity: 40%).

Interface	Contact Discharge	Air Discharge
GND	±8 kV	±15 kV
Antenna Interface	±8 kV	NA
Golden Finger	±1KV	NA

ESD performance is based on EVB-M2 development board.

Copyright © Fibocom Wireless Inc.

6 Structure Specification

6.1 Product Appearance

The product appearance for FM101 module is shown in Figure 24:

Figure 24. Module appearance

The label of each module is subject to the good shipped.

6.2 Dimension of Structure

The structural dimension of the FM101 module is shown in Figure 25:

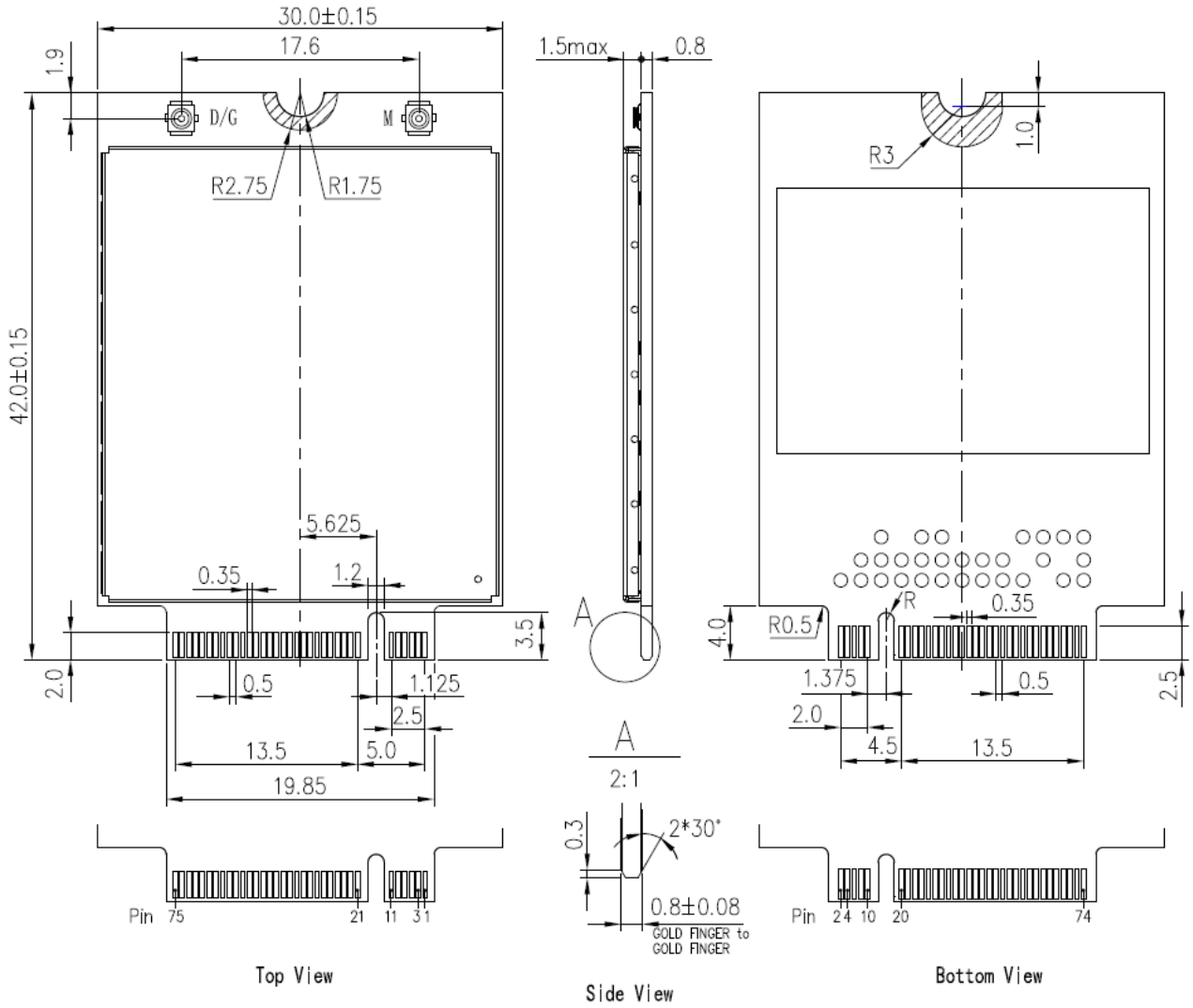

Figure 25. Dimension of structure

6.3 M.2 Interface Model

The FM101 M.2 module adopts 75-pin gold finger as external interface, where 67 pins are signal pins and 8 pins are notch pins as shown in Figure 3. For module dimension, please refer to Figure 26 Dimension of Structure. Based on the M.2 interface definition, FM101 module adopts Type 3042-S3-B interface (30 x 42 mm, the component maximum height on t top layer is 1.5 mm, PCB thickness is 0.8 mm, and KEY ID is B).

Module Nomenclature
Sample type 3042-S3-B

Type XX XX - XX - X - X[1]

Width (mm)
12
16
22
30

Length (mm)
16
26
30
38
42
60
80
110

	Component Max Ht (mm)	
	Top Max[2]	Bottom Max[2]
S1	1.2	0****
S2	1.35	0****
S3	1.5	0****
D1	1.2	1.35
D2	1.35	1.35
D3	1.5	1.35
D4	1.5	0.7
D5	1.5	1.5

Key ID	Pin	Interface
A	8-15	2x PCIe x1 / USB 2.0 / I2C / DP x4
B	12-19	PCIe x2/SATA/USB 2.0/USB 3.0/HSIC/SSIC/Audio/UIM/I2C
C	16-23	Reserved for Future Use
D	20-27	Reserved for Future Use
E	24-31	2x PCIe x1 / USB 2.0 / I2C / SDIO / UART / PCM
F	28-35	Future Memory Interface (FMI)
G	39-46	Generic (Not used for M.2)***
H	43-50	Reserved for Future Use
J	47-54	Reserved for Future Use
K	51-58	Reserved for Future Use
L	55-62	Reserved for Future Use
M	59-66	PCIe x4 / SATA

☒ Use ONLY when a double slot is being specified
☒☒ Label included in height dimension
☒☒☒ Key G is intended for custom use. Devices with this key will not be M.2-compliant. Use at your own risk!
☒☒☒☒ Insulating label allowed on connector-based designs

Figure 26. M.2 interface model

6.4 M.2 Connector

FM101 module connects with host by M.2 connector which is built in host. The recommended part number is APCI0026-P001A manufactured by LOTES Corporation, and the dimensions are shown in Figure 27. For stack-up top-mount single-sided module, the recommended part number is APCI0144-P001A, manufactured by LOTES Corporation, and the dimension is shown in Figure 28. The package of connector, please refer to the specification.

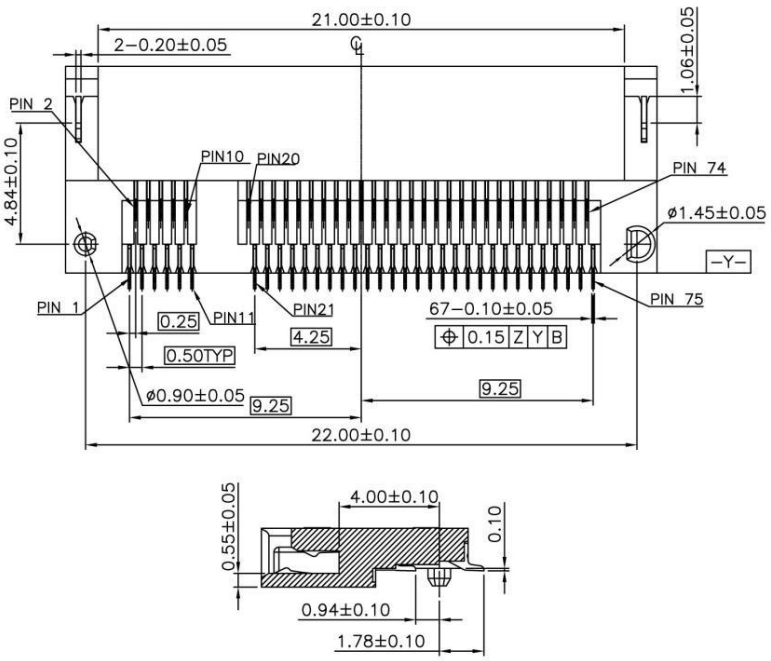

Figure 27. M.2 Dimensions of structure for stack-up Mid-mount single-sided module

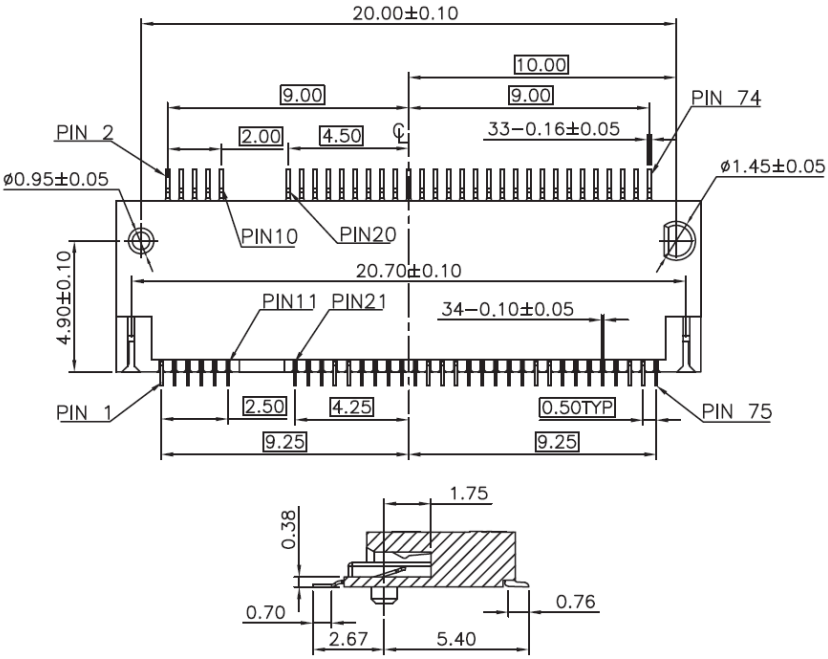

Figure 28. M.2 dimensions of structure for stack-up top-mount single-sided module

6.5 M.2 Card Assembly

6.5.1 Card Insertion

Angled insertion is allowable and preferred; intent is to minimize the insertion and extraction force. The minimum angle of insertion is 5° . For APCI0144-P001A, the maximum angle of insertion is 5°. For APCI0026-P001A, the maximum angle of insertion is 20°. Refer to Figure 29 and Figure 30 to insert and extract the module.

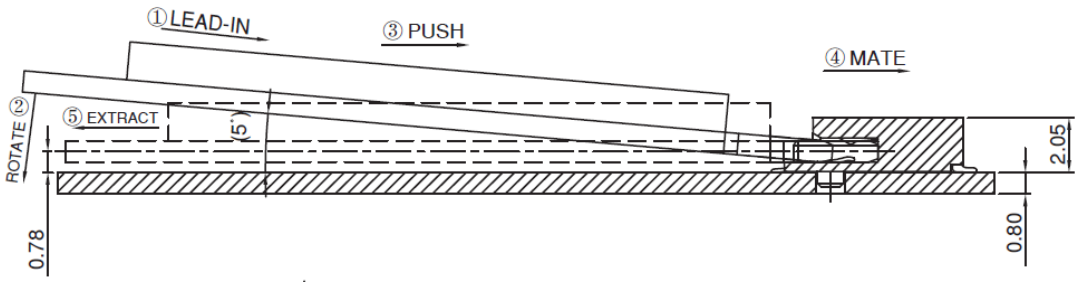

Figure 29. Angle of insertion for APCI0144-P001A

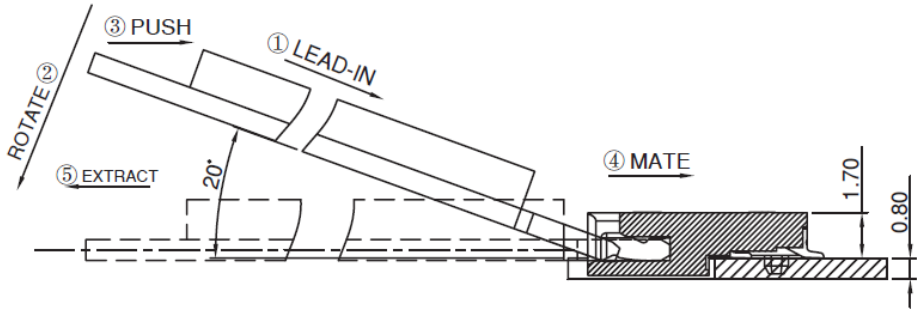

Figure 30. Angle of insertion for APCI0026-P001A

6.5.2 Mid-mount Connection with Single-Sided Module

Stack-up Mid-mount (In-line) single-sided module is shown in Figure 31. The maximum height of components is 1.5 mm.

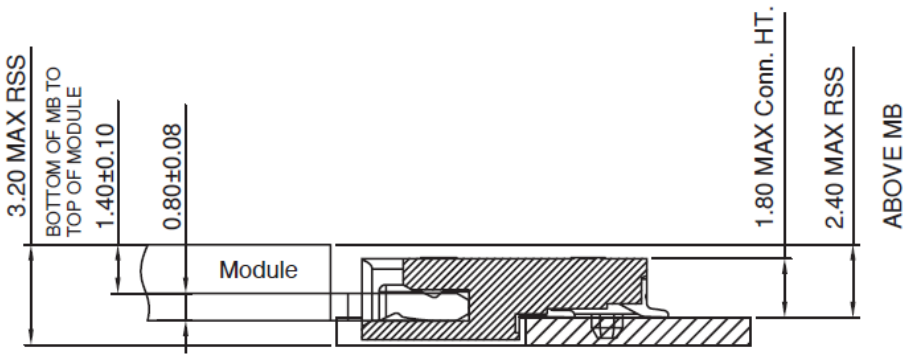

Figure 31. Stack-up mid-mount single-sided module

2.4 mm maximum above mother board

Suggest to cut the area of mother board under M.2 module

6.5.1 Top-mount Connection with Single-Sided Module

Stack-up top-mount single-sided module is shown in Figure 32. The maximum height of components is 1.5 mm.

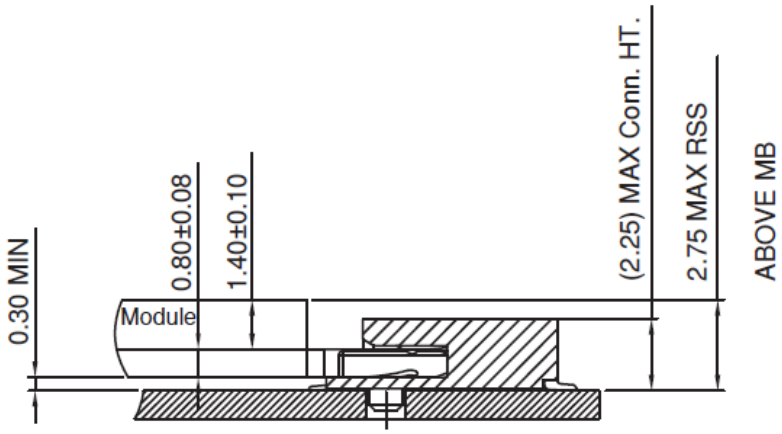

Figure 32. Stack-up top-mount single-sided module

2.75 mm maximum above mother board. Full keep out area 30 mm × 42 mm below module, which means don't place any components and routings below M.2 module. Add thermal pad between M.2 module and mother board for thermal dissipation.

6.6 Storage

6.6.1 Storage Life

Storage Conditions (recommended): Temperature is 23 ± 5℃, relative humidity is less than RH 60%.

Storage period: Under the recommended storage conditions, the storage life is 12 months.

6.7 Packaging

The FM101 module uses the tray sealed packing, combined with the outer packing method using the hard cartoon box, so that the storage, transportation and the usage of modules can be protected to the greatest extent.

The module is a precision electronic product, and may suffer permanent damage if no correct electrostatic protection measures are taken.

6.7.1 Tray Package

The FM101 module uses tray package, 20 pcs are packed in each tray, with 5 trays including one empty tray on top in each box and 5 boxes in each case. Tray packaging process is shown in Figure 33:

Copyright © Fibocom Wireless Inc.

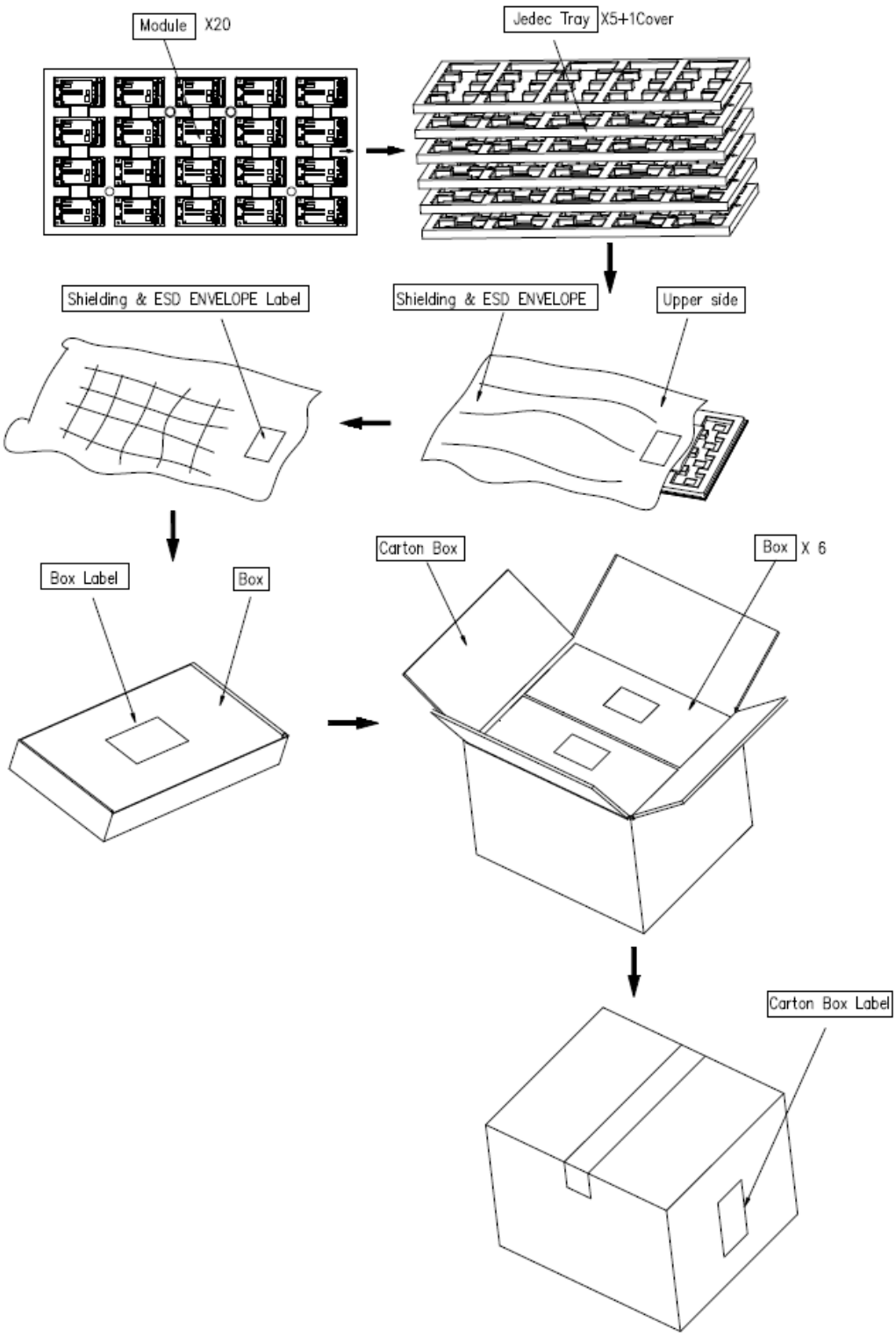

Figure 33. Tray packaging process

6.7.2 Tray Size

The pallet size is 315 mm × 170 mm × 6.5 mm, and is shown in Figure 34:

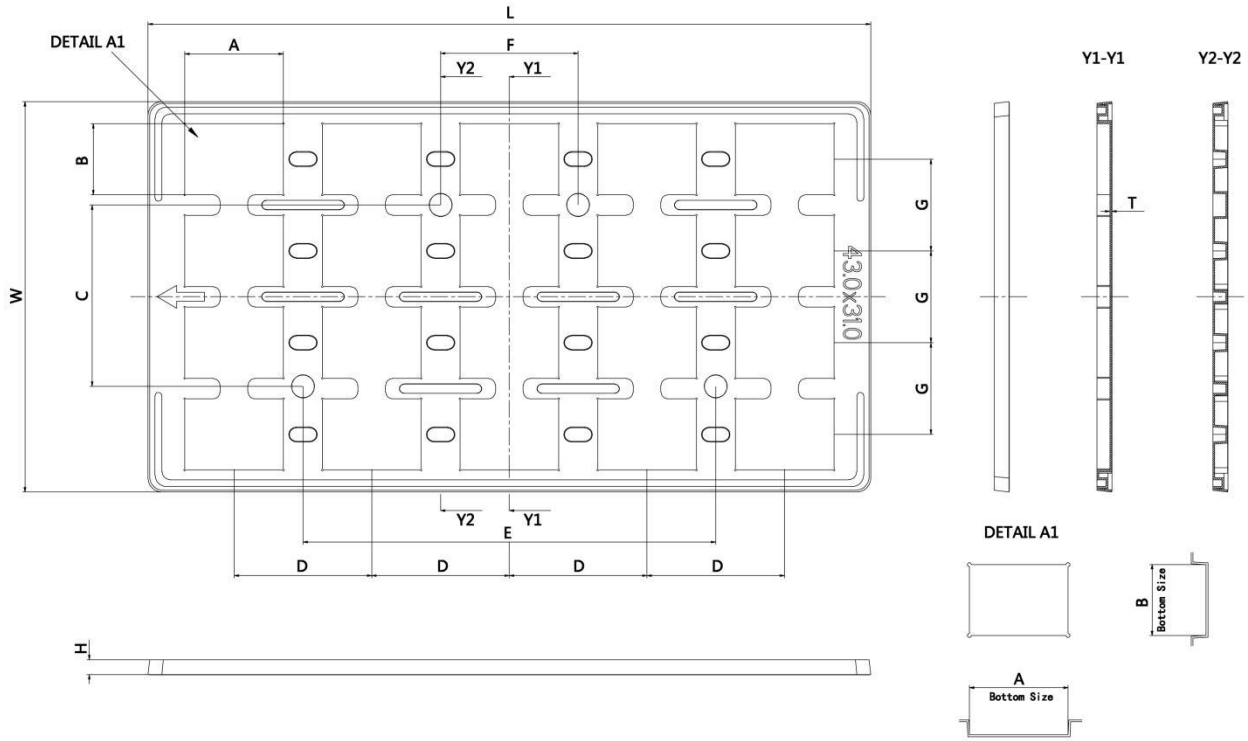

Figure 34. Tray size (unit: mm)

ITEM	DIM (Unit: mm)
L	315.0±2.0
W	170.0±2.0
H	6.5±0.3
T	0.8±0.1
A	43.0±0.3
B	31.0±0.3
C	79.0±0.2
D	60.0±0.2
E	180.0±0.2
F	60.0±0.2

Copyright © Fibocom Wireless Inc.

G	40.0±0.2

OEM/Integrators Installation Manual

Important Notice to OEM integrators 1. This module is limited to OEM installation ONLY. 2. This module is limited to installation in mobile or fixed applications, according to Part 2.1091(b). 3. The separate approval is required for all other operating configurations, including portable configurations with respect to Part 2.1093 and different antenna configurations 4. For FCC Part 15.31 (h) and (k): The host manufacturer is responsible for additional testing to verify compliance as a composite system. When testing the host device for compliance with Part 15 Subpart B, the host manufacturer is required to show compliance with Part 15 Subpart B while the transmitter module(s) are installed and operating. The modules should be transmitting, and the evaluation should confirm that the module's intentional emissions are compliant (i.e. fundamental and out of band emissions). The host manufacturer must verify that there are no additional unintentional emissions other than what is permitted in Part 15 Subpart B or emissions are complaint with the transmitter(s) rule(s). The Grantee will provide guidance to the host manufacturer for Part 15 B requirements if needed.

Important Note

notice that any deviation(s) from the defined parameters of the antenna trace, as described by the instructions, require that the host product manufacturer must notify to Fibocom that they wish to change the antenna trace design. In this case, a Class II permissive change application is required to be filed by the USI, or the host manufacturer can take responsibility through the change in FCC ID (new application) procedure followed by a Class II permissive change application

End Product Labeling

When the module is installed in the host device, the FCC/IC ID label must be visible through a window on the final device or it must be visible when an access panel, door or cover is easily re-moved. If not, a second label must be placed on the outside of the final device that contains the following text: “Contains FCC ID: ZMOFM101GL” “Contains IC: 21374-FM101GL”. The FCC ID/IC ID can be used only when all FCC/IC compliance requirements are met.

Manual Information to the End User

The OEM integrator has to be aware not to provide information to the end user regarding how to install or remove this RF module in the user’s manual of the end product which integrates this module. The end user manual shall include all required regulatory information/warning as show in this manual

Federal Communication Commission Interference Statement

This device complies with Part 15 of the FCC Rules. Operation is subject to the following two conditions: (1) This device may not cause harmful interference, and (2) this device must accept any interference received, including interference that may cause undesired operation.

This equipment has been tested and found to comply with the limits for a Class B digital device, pursuant to Part 15 of the FCC Rules. These limits are designed to provide reasonable protection against harmful interference in a residential installation. This equipment generates, uses and can radiate radio frequency energy and, if not installed and used in accordance with the instructions, may cause harmful interference to radio communications. However, there is no guarantee that interference will not occur in a particular installation. If this equipment does cause harmful interference to radio or television reception, which can be determined by turning the equipment off and on, the user is encouraged to try to correct the interference by one of the following measures:

- Reorient or relocate the receiving antenna.
- Increase the separation between the equipment and receiver
- Connect the equipment into an outlet on a circuit different from that to which the receiver is connected.
- Consult the dealer or an experienced radio/TV technician for help.

Any changes or modifications not expressly approved by the party responsible for compliance could void the user's authority to operate this equipment. This transmitter must not be co-located or operating in conjunction with any other antenna or transmitter.

List of applicable FCC rules

This module has been tested and found to comply with part 22, part 24, part 27, part 90, part 96 requirements for Modular Approval.

The modular transmitter is only FCC authorized for the specific rule parts (i.e., FCC transmitter rules) listed on the grant, and that the host product manufacturer is responsible for compliance to any other FCC rules that apply to the host not covered by the modular transmitter grant of certification. If the grantee markets their product as being Part 15 Subpart B compliant (when it also contains unintentional-radiator digital circuity), then the grantee shall provide a notice stating that the final host product still requires Part 15 Subpart B compliance testing with the modular transmitter installed.

This device is intended only for OEM integrators under the following conditions: (For module device use)

1) The antenna must be installed such that 20 cm is maintained between the antenna and users, and
2) The transmitter module may not be co-located with any other transmitter or antenna.

As long as 2 conditions above are met, further transmitter test will not be required. However, the OEM integrator is still responsible for testing their end-product for any additional compliance requirements required with this module installed.

Radiation Exposure Statement

This equipment complies with FCC radiation exposure limits set forth for an uncontrolled environment. This equipment should be installed and operated with minimum distance 20 cm between the radiator & your body.

Industry Canada Statement

This device complies with Industry Canada's licence-exempt RSSs. Operation is subject to the following two conditions:
(1) This device may not cause interference; and
(2) This device must accept any interference, including interference that may cause undesired operation of the device.

Le présent appareil est conforme aux CNR d'Industrie Canada applicables aux appareils radio exempts de licence. L'exploitation est autorisée aux deux conditions suivantes:
(1) l'appareil ne doit pas produire de brouillage, et
(2) l'utilisateur de l'appareil doit accepter tout brouillage radioélectrique subi, même si le brouillage est susceptible d'en compromettre le fonctionnement."

Radiation Exposure Statement

This equipment complies with IC radiation exposure limits set forth for an uncontrolled environment. This equipment should be installed and operated with minimum distance 20 cm between the radiator & your body

Déclaration d'exposition aux radiations:
Cet équipement est conforme aux limites d'exposition aux rayonnements ISED établies pour un environnement non contrôlé. Cet équipement doit être installé et utilisé avec un minimum de 20 cm de distance entre la source de rayonnement et votre corps.

This device is intended only for OEM integrators under the following conditions: (For module device use)

1) The antenna must be installed such that 20 cm is maintained between the antenna and users, and
2) The transmitter module may not be co-located with any other transmitter or antenna. As long as 2 conditions above are met, further transmitter test will not be required. However, the OEM integrator is still responsible for testing their end-product for any additional compliance requirements required with this module installed.

Cet appareil est conçu uniquement pour les intégrateurs OEM dans les conditions suivantes: (Pour utilisation de dispositif module)

1) L'antenne doit être installée de telle sorte qu'une distance de 20 cm est respectée entre l'antenne et les utilisateurs, et
2) Le module émetteur peut ne pas être coïmplanté avec un autre émetteur ou antenne.

Tant que les 2 conditions ci-dessus sont remplies, des essais supplémentaires sur l'émetteur ne seront pas nécessaires. Toutefois, l'intégrateur OEM est toujours responsable des essais sur son produit final pour toutes exigences de conformité supplémentaires requis pour ce module installé.

IMPORTANT NOTE:

In the event that these conditions cannot be met (for example certain laptop configurations or colocation with another transmitter), then the Canada authorization is no longer considered valid and the IC ID cannot be used on the final product. In these circumstances, the OEM integrator will be responsible for re-evaluating the end product (including the transmitter) and obtaining a separate Canada authorization.

NOTE IMPORTANTE:

Dans le cas où ces conditions ne peuvent être satisfaites (par exemple pour certaines configurations d'ordinateur portable ou de certaines co-localisation avec un autre émetteur), l'autorisation du Canada n'est plus considéré comme valide et l'ID IC ne peut pas être utilisé sur le produit final. Dans ces circonstances, l'intégrateur OEM sera chargé de réévaluer le produit final (y compris l'émetteur) et l'obtention d'une autorisation distincte au Canada.

End Product Labeling

This transmitter module is authorized only for use in device where the antenna may be installed such that 20 cm may be maintained between the antenna and users. The final end product must be labeled in a visible area with the following: “Contains IC: 21374-FM101GL”.

Plaque signalétique du produit final

Ce module émetteur est autorisé uniquement pour une utilisation dans un dispositif où l'antenne peut être installée de telle sorte qu'une distance de 20cm peut être maintenue entre l'antenne et les utilisateurs. Le produit final doit être étiqueté dans un endroit visible avec l'inscription suivante: "Contient des IC: 21374-FM101GL ".

Manual Information to the End User

The OEM integrator has to be aware not to provide information to the end user regarding how to install or remove this RF module in the user’s manual of the end product which integrates this module.
The end user manual shall include all required regulatory information/warning as show in this manual.

Manuel d'information à l'utilisateur final

L'intégrateur OEM doit être conscient de ne pas fournir des informations à l'utilisateur final quant à la façon d'installer ou de supprimer ce module RF dans le manuel de l'utilisateur du produit final qui intègre ce module.
Le manuel de l'utilisateur final doit inclure toutes les informations réglementaires requises et avertissements comme indiqué dans ce manuel.